STATE OF OHIO
CITY OF CANTON

WALNUT AVE. & CHERRY AVE. COMPLETE STREET AND BIKE LANE PROJECT

STA-43-12.64, PID 91592, GP1153

CITY OF CANTON
STARK COUNTY

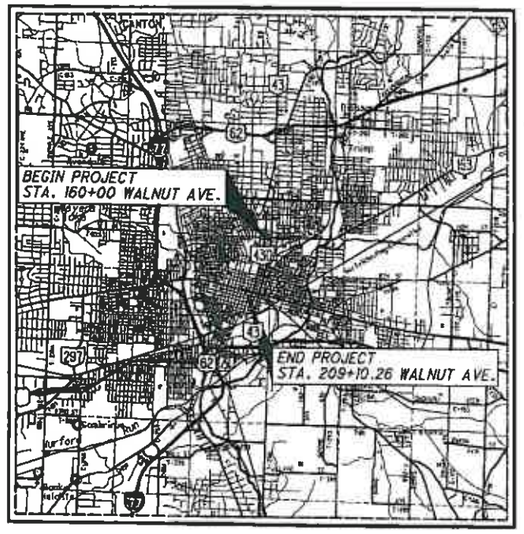

LOCATION MAP

LATITUDE: 40°48'10" LONGITUDE: 81°22'16"

SCALE IN MILES

0 1 2 3 4

N

PORTION TO BE IMPROVED
INTERSTATE & DIVIDED HIGHWAY — 62
UNDIVIDED STATE & FEDERAL ROUTES — 153
OTHER ROADS — WALNUT AVENUE

DESIGN DESIGNATION WALNUT AVENUE (S.R. 43D SOUTHBOUND)	12TH STREET NE TO 6TH STREET NE	6TH STREET NE TO 4TH STREET SE
CURRENT ADT (2012)	5200	5980
DESIGN YEAR ADT (2032)	5200	5980
DESIGN HOURLY VOLUME (2032)	560	640
DIRECTIONAL DISTRIBUTION	100%	100%
TRUCKS (24 HOUR B&C)	5%	12%
DESIGN SPEED	30 MPH	30 MPH
LEGAL SPEED	25 MPH	25 MPH
DESIGN FUNCTIONAL CLASSIFICATION:	URBAN PRINCIPAL ARTERIAL	URBAN PRINCIPAL ARTERIAL
NHS PROJECT	NO	NO

DESIGN EXCEPTIONS

NONE REQUIRED

UNDERGROUND UTILITIES

CONTACT BOTH SERVICES
CALL TWO WORKING DAYS
BEFORE YOU DIG

CALL
1-800-362-2764
(TOLL FREE)
OHIO UTILITIES PROTECTION SERVICE
NON-MEMBERS
MUST BE CALLED DIRECTLY

OIL & GAS PRODUCERS PROTECTIVE
SERVICE CALL: 1-800-925-0988

PLAN PREPARED BY:

HAMMONTREE & ASSOCIATES, LIMITED
5233 STONEHAM ROAD
NORTH CANTON, OHIO 44720

INDEX OF SHEETS:

TITLE SHEET	1
SCHEMATIC PLAN	2
TYPICAL SECTIONS	3-4
GENERAL NOTES	5-11
MAINTENANCE OF TRAFFIC NOTES	12-13
GENERAL SUMMARY	14-16
ESTIMATED QUANTITIES	17-23
PLAN AND PROFILE-WALNUT AVENUE	24-34
PLAN-CHERRY AVENUE	35-36
INTERSECTION DETAILS	37-42
DRIVE DETAILS AND SUBSUMMARY	43
STORM SEWER PROFILES	44-46
TRAFFIC CONTROL NOTES	47-50
SIGNING AND PAVEMENT MARKING SUBSUMMARY	51
SIGNING ESTIMATED QUANTITIES	52-62
PAVEMENT MARKING ESTIMATED QUANTITIES	63-77
SIGNING PLAN	78-88
PAVEMENT MARKING PLAN	89-99
TRAFFIC SIGNAL SUBSUMMARY	100
TRAFFIC SIGNAL PLAN	101-114
LIGHTING NOTES	115-116
LIGHTING ESTIMATED QUANTITIES	117-119, 119A
LIGHTING PLAN	120-132
TYPICAL MINOR BRT STOP WITHOUT BUS SHELTER	133
TYPICAL MAJOR BRT STOP WITH BUS SHELTER	134
TYPICAL BRT STOP SIGNAGE DETAILS	135

ODOT PIS 207000 DATED 1/21/2011 - BIKEWAY PAVEMENT MARKING DETAILS
CITY OF CANTON STANDARD CONSTRUCTION DRAWINGS (END OF PLANS)

WALNUT AVENUE EARTH DISTURBED AREAS (E.D.A.)

PROJECT E.D.A.:	1.02 AC.
ESTIMATED CONTRACTOR E.D.A.:	0.25 AC.
TOTAL E.D.A.:	1.27 AC.
NOTICE OF INTENT E.D.A.:	4.90 AC.

CHERRY AVENUE EARTH DISTURBED AREAS (E.D.A.)

PROJECT E.D.A.:	0.15 AC.
ESTIMATED CONTRACTOR E.D.A.:	0.25 AC.
TOTAL E.D.A.:	0.40 AC.
NOTICE OF INTENT E.D.A.:	NOT REQUIRED

PROJECT DESCRIPTION

TRANSPORTATION FACILITIES IMPROVEMENT PROJECT ALONG WALNUT AVENUE (S.R. 43D ONE-WAY SOUTHBOUND) FROM 12TH STREET N.E. (S.R. 153) TO 4TH STREET S.E. AND SECTIONS OF CHERRY AVENUE N.E. (S.R. 43D ONE-WAY NORTHBOUND) BETWEEN 6TH STREET N.E. TO 12TH STREET N.E. (S.R. 153).

WORK ALONG WALNUT AVENUE INCLUDES PAVEMENT PLANING AND RESURFACING, PAVEMENT MARKING UPGRADES TO ACCOMMODATE VEHICULAR THROUGH LANE REDUCTION AND CONTRAFLOW BIKE LANES, TRAFFIC SIGNAL UPGRADES AT 9 SIGNALIZED INTERSECTIONS, PARKING RECONFIGURATION WITH BACK-IN DIAGONAL ON-STREET PARKING, SARTA BUS SHELTER/STOP UPGRADES AT 10 DESIGNATED LOCATIONS, LIGHTING AND STREETSCAPE ENHANCEMENTS, AND MINOR CURBING AND WALK MODIFICATIONS AT BUS STOPS AND INTERSECTIONS.

WORK ON SECTIONS OF CHERRY AVENUE INCLUDE SARTA BUS SHELTER/STOP UPGRADES AND MINOR CURBING AND WALK MODIFICATIONS AT BUS STOPS.

SARTA BUS SHELTERS/STOP UPGRADES WILL OCCUR AT THE FOLLOWING LOCATIONS:

A. WALNUT AVENUE @ AMERMAN PLACE N.E., S.W. QUADRANT
B. WALNUT AVENUE @ 9TH STREET N.E., S.W. QUADRANT
C. WALNUT AVENUE, 700 BLOCK
D. WALNUT AVENUE @ 6TH STREET N.E., N.W. QUADRANT
E. WALNUT AVENUE @ 4TH STREET N.E., S.W. QUADRANT
F. CHERRY AVENUE @ 4TH STREET N.E., S.E. QUADRANT
G. CHERRY AVENUE @ 6TH STREET N.E., S.E. QUADRANT
H. CHERRY AVENUE @ HINER PLACE N.E., S.E. QUADRANT
I. CHERRY AVENUE @ LAWRENCE ROAD N.E., N.E. QUADRANT
J. CHERRY AVENUE @ 12TH STREET N.E., S.E. QUADRANT

2010 SPECIFICATIONS

THE STANDARD SPECIFICATIONS OF THE STATE OF OHIO, DEPARTMENT OF TRANSPORTATION, INCLUDING CHANGES AND SUPPLEMENTAL SPECIFICATIONS LISTED IN THE PROPOSAL SHALL GOVERN THIS IMPROVEMENT.

I HEREBY APPROVE THESE PLANS AND DECLARE THAT THE MAKING OF THIS IMPROVEMENT WILL NOT REQUIRE THE CLOSING TO TRAFFIC OF THE HIGHWAY AND THAT PROVISIONS FOR THE MAINTENANCE AND SAFETY OF TRAFFIC WILL BE AS SET FORTH ON THE PLANS AND ESTIMATES.

ENGINEERS SEAL:

FOR HIGHWAY PLAN EXCEPT BUS SHELTERS

STATE OF OHIO — WILLIAM L. CROSTON IV — E-70841 — REGISTERED PROFESSIONAL ENGINEER

SIGNED: JV
DATE: 6/29/2012

STANDARD CONSTRUCTION DRAWINGS										SUPPLEMENTAL SPECIFICATIONS	
ODOT						CITY OF CANTON					
BP-2.1	7-18-08	HL-30.11	10-16-09	TC-41.20	1-19-01	NO. 1	3-12	NO. 46	2-12	800-2010	4-20-12
BP-3.1	4-20-12	HL-30.21	10-21-11	TC-41.30	1-19-07	NO. 4	3-12			802	1-20-12
BP-4.1	7-16-04	HL-30.22	4-17-09	TC-41.41	1-21-11	NO. 10	1-12	NO. 63	7-12	823	7-15-11
BP-5.1	7-28-00	HL-40.10	1-19-07	TC-42.20	1-21-11	NO. 12	1-12	NO. 65	7-12	832	5-5-09
BP-7.1	10-15-10	HL-40.20	1-19-07	TC-52.10	1-19-07	NO. 19	1-12				
		HL-50.11	1-19-07	TC-52.20	1-19-07	NO. 27	3-12				
CB-2.2	7-15-05			TC-71-10	1-21-11	NO. 28	3-12				
CB-2.3	7-15-05	MH-1.2	1-20-06	TC-73.10	4-20-12	NO. 29	3-12				
				TC-81.21	10-21-11	NO. 30	3-12			SPECIAL PROVISIONS	
DM-1.1	1-21-11			TC-83.10	1-19-07	NO. 40	2-12				
DM-1.2	10-21-05			TC-83.20	4-20-12	NO. 41	2-12				
DM-1.4	7-15-11			TC-85.10	10-16-09	NO. 42	2-12				
DM-4.3	4-17-09	MT-95.50	4-17-09	TC-85.20	7-15-11	NO. 43	2-12				
DM-4.4	4-17-09	MT-101.90	10-21-11			NO. 44	2-12				
		MT-110.10	1-16-09			NO. 45	2-12				

APPROVED Dan Moeglin
DATE 7/2/12 CANTON CITY ENGINEER
Revised 8/31/12 Dan Moeglin

FEDERAL PROJECT NO. NONE
PID NO. 91592
CONSTRUCTION PROJECT NO.
RAILROAD INVOLVEMENT NONE

WALNUT & CHERRY COMPLETE STREET BIKE LANES

R:\Stark\SARTA\Task 3 Canton\STA\91592\roadway\sheets\91592GT001.dgn 6/29/2012 1:24:25 PM bill

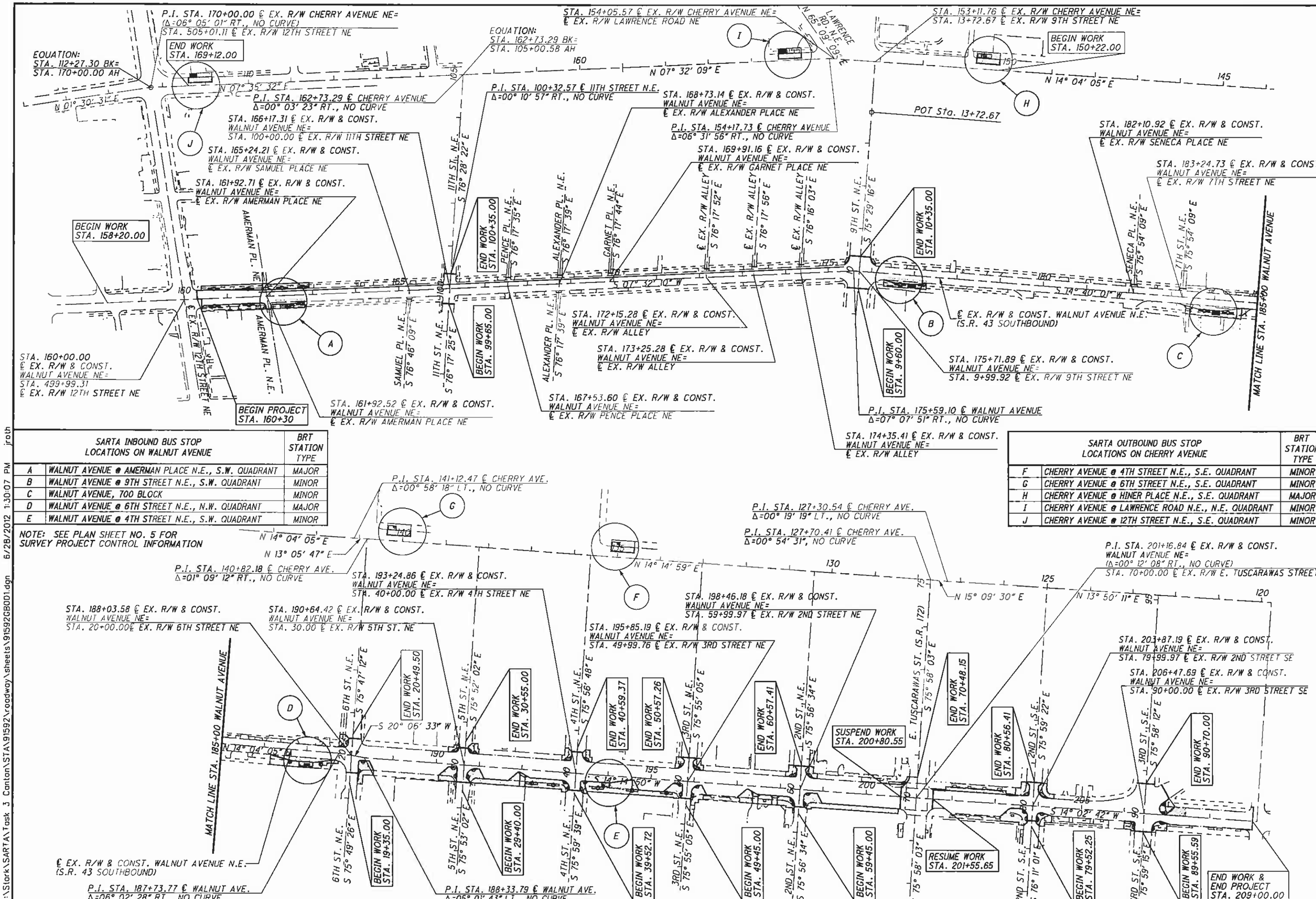

	SARTA INBOUND BUS STOP LOCATIONS ON WALNUT AVENUE	BRT STATION TYPE
A	WALNUT AVENUE @ AMERMAN PLACE N.E., S.W. QUADRANT	MAJOR
B	WALNUT AVENUE @ 9TH STREET N.E., S.W. QUADRANT	MINOR
C	WALNUT AVENUE, 700 BLOCK	MINOR
D	WALNUT AVENUE @ 6TH STREET N.E., N.W. QUADRANT	MAJOR
E	WALNUT AVENUE @ 4TH STREET N.E., S.W. QUADRANT	MINOR

	SARTA OUTBOUND BUS STOP LOCATIONS ON CHERRY AVENUE	BRT STATION TYPE
F	CHERRY AVENUE @ 4TH STREET N.E., S.E. QUADRANT	MINOR
G	CHERRY AVENUE @ 6TH STREET N.E., S.E. QUADRANT	MINOR
H	CHERRY AVENUE @ HINER PLACE N.E., S.E. QUADRANT	MAJOR
I	CHERRY AVENUE @ LAWRENCE ROAD N.E., N.E. QUADRANT	MINOR
J	CHERRY AVENUE @ 12TH STREET N.E., S.E. QUADRANT	MINOR

NOTE: SEE PLAN SHEET NO. 5 FOR SURVEY PROJECT CONTROL INFORMATION

SCHEMATIC PLAN

WALNUT & CHERRY COMPLETE STREET BIKE LANES

R:\Stark\SARTA\Task 3 Canton\STA\91592\roadway\sheets\91592GB001.dgn 6/28/2012 1:30:07 PM jroth

EXISTING LEGEND

- (A) EXISTING ASPHALT PAVEMENT (2"-4"±)
- (B) EXISTING BRICK PAVEMENT (3"±)
- (C) EXISTING MASTIC BED (¾"±)
- (D) EXISTING REINFORCED CONCRETE (7"±)
- (E) EXISTING INSULATION COURSE (3"±)
- (F) EXISTING CURB

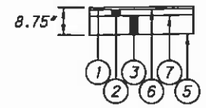

DETAIL A
FULL DEPTH ASPHALT REPLACEMENT SECTION

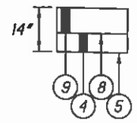

DETAIL B
FULL DEPTH CONCRETE SECTION

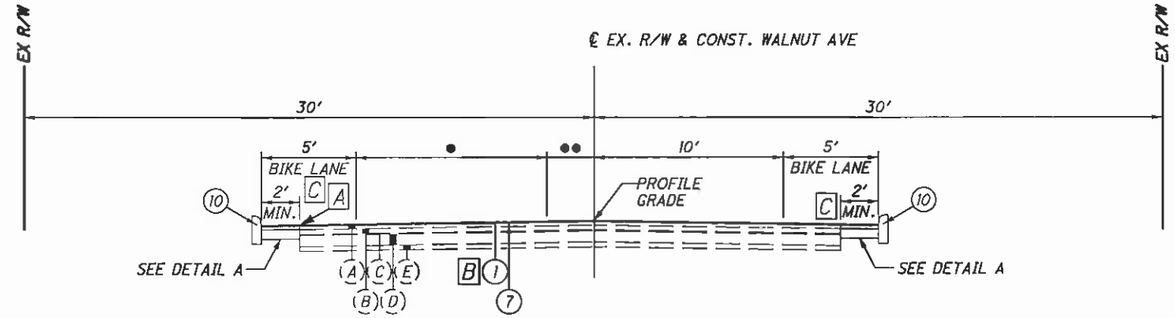

NORMAL SECTION - WALNUT AVENUE

SECTION APPLIES:
STA. 160+30.00 TO STA. 161+75.00

● 15.00': STA. 160+30.00 TO STA. 160+50.00
15.00' TO 10.00': STA. 160+50.00 TO STA. 161+75.00

●● 2.50': STA. 160+30.00 TO STA. 160+50.00
2.50' TO 0.00': STA. 160+50.00 TO STA. 161+75.00

PROPOSED LEGEND

1. ITEM 424 - 0.75" FINE GRADED POLYMER ASPHALT CONCRETE, TYPE A
2. ITEM 448 - 2.00" ASPHALT CONCRETE INTERMEDIATE COURSE, TYPE 2, PG 64-22
3. ITEM 305 - 6" CONCRETE BASE
4. ITEM 304 - 6" AGGREGATE BASE, AS PER PLAN
5. ITEM 204 - SUBGRADE COMPACTION
6. ITEM 407 - TACK COAT FOR INTERMEDIATE COURSE (0.04 GAL./S.Y.)
7. ITEM 407 - TACK COAT (0.075 GAL./SQ.YD.) [D]
8. ITEM 408 - PRIME COAT (0.40 GAL./SQ.YD.)
9. ITEM 452 - 8" NON-REINFORCED CONCRETE PAVEMENT
10. ITEM 609 - CURB, TYPE 6

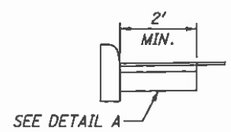

CURBED SECTION
DETAIL APPLIES:
STA. 161+75.00 TO STA. 162+55.00, LT.

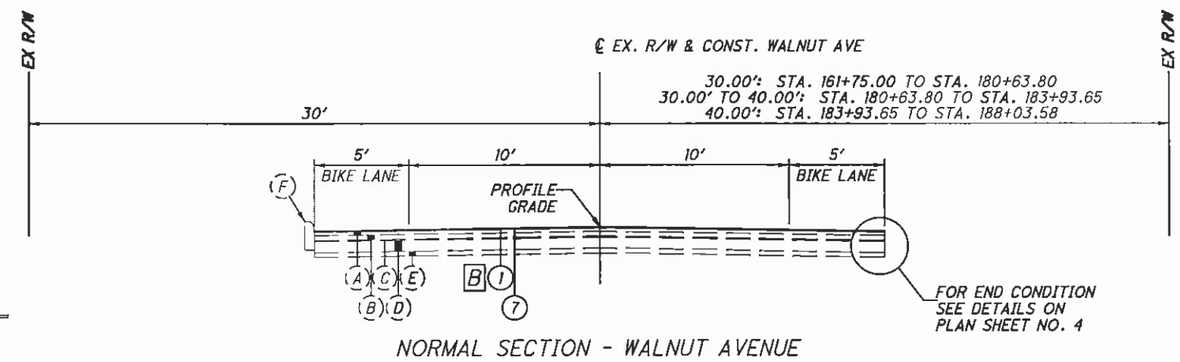

30.00': STA. 161+75.00 TO STA. 180+63.80
30.00' TO 40.00': STA. 180+63.80 TO STA. 183+93.65
40.00': STA. 183+93.65 TO STA. 188+03.58

NORMAL SECTION - WALNUT AVENUE

SECTION APPLIES:
STA. 161+75.00 TO STA. 188+03.58

NOTES

[A] EXISTING BRICK PAVEMENT EDGES SHALL BE SAWCUT UNDER ITEM 252-FULL DEPTH PAVEMENT SAWING.

[B] EXISTING ASPHALT SURFACE SHALL BE PLANED 0.75" UNDER ITEM 252-PAVEMENT PLANING, ASPHALT CONCRETE AND REPLACED WITH ITEM 424 IN ALL RESURFACING AREAS.

[C] EXISTING BRICK PAVEMENT SHALL BE REMOVED UNDER ITEM 202-PAVEMENT REMOVED, AS PER PLAN.

[D] WHEN TACK COAT IS PLACED ON CONCRETE, ODOT CMS REQUIRES THE USE OF RUBBERIZED ASPHALT EMULSION CONFORMING TO 702.13.

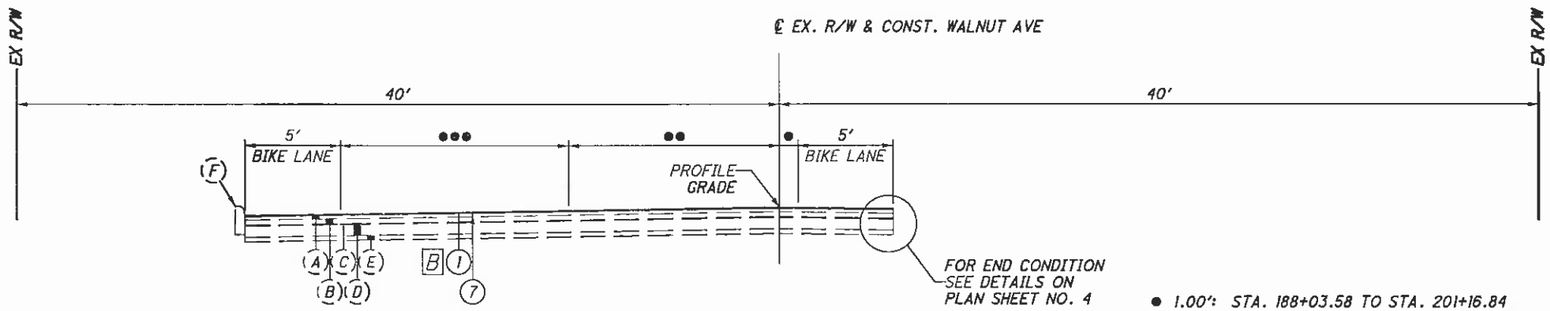

NORMAL SECTION - WALNUT AVENUE

SECTION APPLIES:
STA. 188+03.58 TO STA. 203+87.19

● 1.00': STA. 188+03.58 TO STA. 201+16.84
3.00': STA. 201+16.84 TO STA. 203+87.19

●● 11.00': STA. 188+03.58 TO STA. 201+16.84
7.00': STA. 201+16.84 TO STA. 203+87.19

●●● 12.00': STA. 188+03.58 TO STA. 201+16.84
10.00': STA. 201+16.84 TO STA. 203+87.19

TYPICAL SECTIONS

WALNUT & CHERRY
COMPLETE STREET
BIKE LANES

R:\Stark\SARTA\Task 3 Canton\STA\91592\roadway\sheets\91592GY001.dgn 6/28/2012 1:48:32 PM jroth

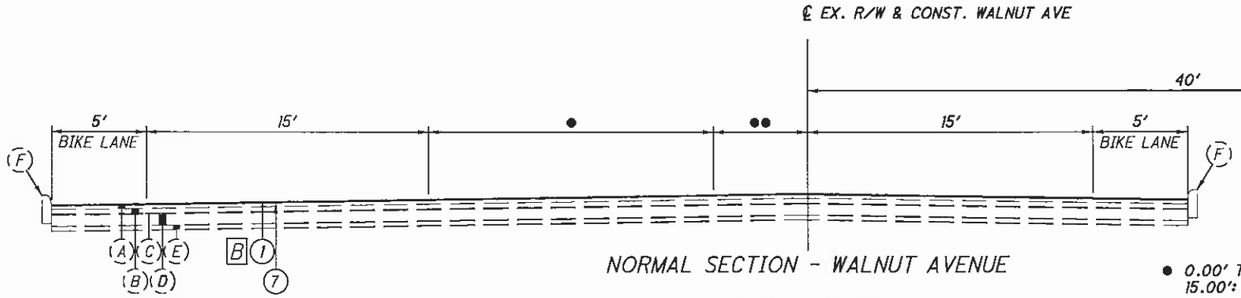

NORMAL SECTION - WALNUT AVENUE

SECTION APPLIES:
STA. 203+87.19 TO STA. 206+47.69

● 0.00' TO 15.00': STA. 205+01.02 TO STA. 206+06.74
15.00': STA. 206+06.74 TO STA. 206+47.69

●● 0.00' TO 14.44: STA. 206+06.74 TO STA. 206+47.69

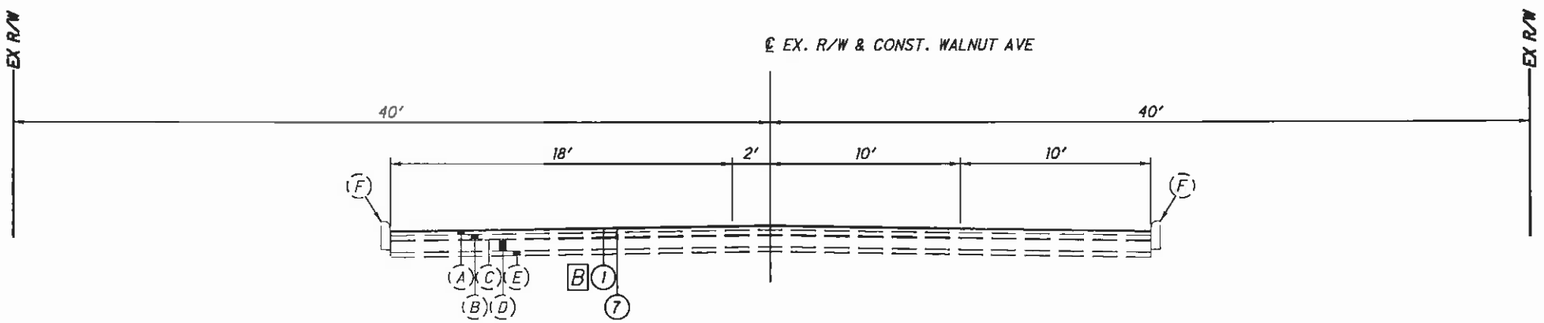

NORMAL SECTION - WALNUT AVENUE

SECTION APPLIES:
STA. 206+47.69 TO STA. 209+00.00

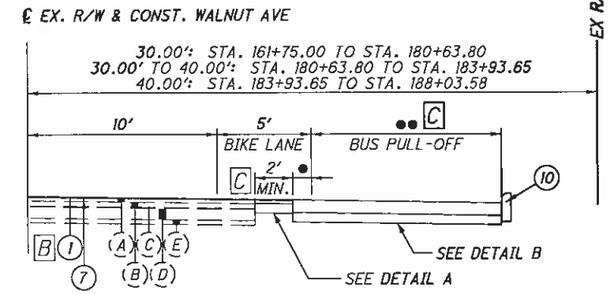

END CONDITION 1 - BUS PULL-OFF AREA

SECTION APPLIES:
STA. 161+75.00 TO STA. 188+03.58 WALNUT AVENUE

● 0.50': STA. 162+05.00 TO STA. 162+80.00
5.50': STA. 176+30.00 TO STA. 177+30.00
0.00': STA. 183+15.00 TO STA. 184+65.00
STA. 186+15.58 TO STA. 187+65.89

●● 4.50': STA. 161+80.41 TO STA. 162+55.00
4.50' TO 0.00': STA. 162+55.00 TO STA. 162+80.00
0.00' TO 5.00': STA. 176+40.00 TO STA. 176+55.00
5.00': STA. 176+55.00 TO STA. 177+05.00
5.00' TO 0.00': STA. 177+05.00 TO STA. 177+30.00
0.00' TO 10.00': 183+15.00 TO STA. 183+65.00
10.00': STA. 183+65.00 TO STA. 184+15.00
10.00' TO 0.00': STA. 184+15.00 TO STA. 184+65.00
0.00' TO 10.00': STA. 186+15.89 TO STA. 186+65.89
10.00': STA. 186+65.89 TO SA. 187+15.89
10.00' TO 0.00': STA. 187+15.89 TO STA. 187+65.89

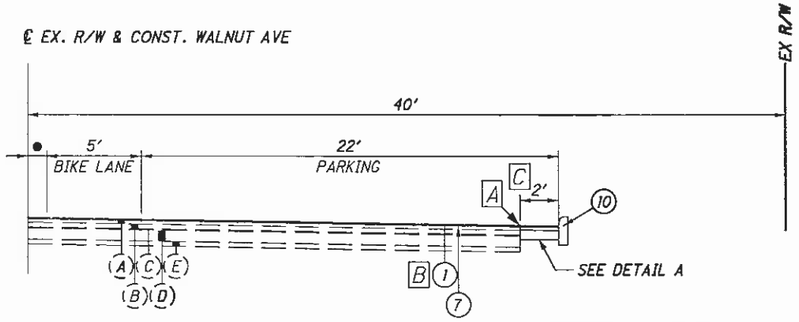

END CONDITION 2 - BACK IN ANGLED PARKING SECTION

SECTION APPLIES:
STA. 188+03.58 TO STA. 203+87.19

● 1.00': STA. 188+03.58 TO STA. 201+16.84
3.00': STA. 201+16.84 TO STA. 203+87.19

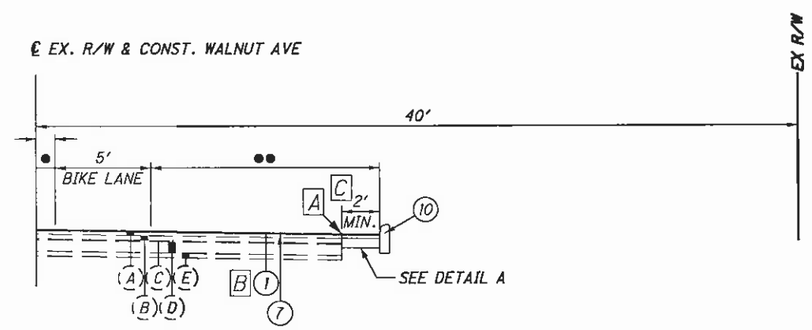

END CONDITION 3 - EXCLUSIVE RIGHT TURN LANE

SECTION APPLIES:
STA. 188+03.58 TO STA. 203+87.19

● 1.00': STA. 188+03.58 TO STA. 201+16.84
3.00': STA. 201+16.84 TO STA. 203+87.19

●● 0.00' TO 12.00': STA. 191+95 TO STA. 192+20
12.00': STA. 192+20 TO STA. 192+95
0.00' TO 12.00': STA. 197+23 TO STA. 197+48
12.00': STA. 197+48 TO STA. 198+23

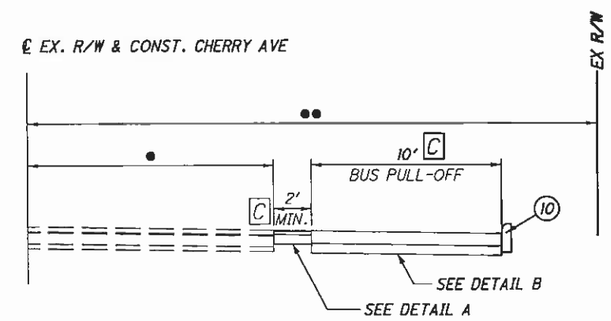

END CONDITION 4 - BUS PULL-OFF AREA

SECTION APPLIES:
STA. 134+62.00 TO STA. 135+16.00
STA. 139+83.00 TO STA. 140+37.00
STA. 150+22.00 TO STA. 150+76.00
STA. 154+83.00 TO STA. 155+37.00
STA. 168+58.00 TO STA. 169+12.00

● 13.00': STA. 134+62.00 TO STA. 135+16.00
STA. 139+83.00 TO STA. 140+37.00
STA. 150+22.00 TO STA. 150+76.00
4.00': STA. 154+83.00 TO STA. 155+37.00
7.00': STA. 168+58.00 TO STA. 169+12.00

●● 30.00': STA. 154+83.00 TO STA. 155+37.00
STA. 168+58.00 TO STA. 169+12.00
40.00': STA. 134+62.00 TO STA. 135+16.00
STA. 139+83.00 TO STA. 140+37.00
STA. 150+22.00 TO STA. 150+76.00

TYPICAL SECTIONS

WALNUT & CHERRY
COMPLETE STREET
BIKE LANES

R:\Stark\SARTA\Task 3 Canton\STA\91592\roadway\sheets\91592GY002.dgn 6/28/2012 1:48:58 PM jroth

CITY OF CANTON INCIDENTALS:

PRE-CONSTRUCTION NOTES:

ALL WORK REQUIRED TO COMPLETE THIS IMPROVEMENT WITHIN THE EXISTING RIGHT OF WAY SHALL BE PERFORMED IN ACCORDANCE WITH SPECIFICATIONS/REQUIREMENTS OF THE CITY OF CANTON AND THE OHIO DEPARTMENT OF TRANSPORTATION (ODOT) CONSTRUCTION AND MATERIAL SPECIFICATIONS DATED 2010, EXCEPT AS HEREIN AMENDED. IN THE CASE OF A CONFLICT BETWEEN THE CITY OF CANTON AND ODOT SPECIFICATIONS/REQUIREMENTS, THE CITY OF CANTON REQUIREMENTS WILL TAKE PRECEDENCE, UNLESS OTHERWISE DIRECTED IN WRITING BY THE CITY ENGINEER.

THE CONTRACTOR SHALL BE RESPONSIBLE FOR FULLY COMPLYING WITH ALL THE ADMINISTRATIVE DUTIES HEREIN CONTAINED. THE CONTRACTOR SHALL DESIGNATE TO THE CITY AN EMPLOYEE RESPONSIBLE FOR CORRESPONDENCE, NOTIFICATIONS, AND SUBMITTALS PERTINENT TO THE PROJECT.

A PRE-CONSTRUCTION MEETING WITH THE CONTRACTOR, REPRESENTATIVES OF ALL UTILITY COMPANIES, REPRESENTATIVE OF STARK AREA REGIONAL TRANSIT AUTHORIT (SARTA), REPRESENTATIVE FROM ODOT D-4, AND ALL PERTINENT CITY OF CANTON ENGINEERING DEPARTMENTS/DIVISIONS IS REQUIRED FOR THIS PROJECT PRIOR TO THE START OF ANY CONSTRUCTION ACTIVITY.

FOR CITY GENERAL PROJECTS, THE CITY ENGINEER WILL CONTACT THE CONTRACTOR TO ARRANGE A MEETING DATE. THE CITY ENGINEER WILL CONTACT THE ABOVE AGENCIES TO CONFIRM THE MEETING DATE.

POST-CONSTRUCTION NOTES:

AS-BUILT PRINTS SHALL BE PROVIDED TO THE CITY OF CANTON

BY THE CONTRACTOR AT THE COMPLETION OF THE PROJECT. THE CONSTRUCTION BOND WILL NOT BE RELEASED UNTIL THE AS-BUILT DRAWINGS HAVE BEEN ACCEPTED.

THE DEVELOPER/CONTRACTOR SHALL NOTIFY THE CITY ENGINEER IN WRITING UPON THE COMPLETION OF MONUMENTS BEING SET/ADJUSTED AS PER PLAN OR RECORD PLAT.

PRIOR TO THE RELEASE OF RETAINED/CONSTRUCTION BOND BY THE CITY OF CANTON, THE CONTRACTOR SHALL HAVE COMPLETED THE ENGINEER'S PROJECT PUNCHLIST AND SUBMITTED A FINAL WAIVER OF LEIN, IN ACCORDANCE WITH CITY SS 01-00.

LISTED BELOW ARE THE PRIMARY POINTS OF CONTACT FOR THE CITY OF CANTON AND SARTA.

CITY OF CANTON
ATTN: DANIEL J. MOEGLIN, P.E., S.I., CANTON CITY ENGINEER
2436 30TH STREET N.E.
CANTON, OHIO 44705
PHONE: 330-489-3381
EMAIL: dan.moeglin@cantonohio.gov

STARK AREA REGIONAL TRANSIT AUTHORITY (SARTA)
ATTN: KIRT CONRAD, EXECUTIVE DIRECTOR/CEO
1600 GATEWAY BOULEVEARD S.E.
CANTON, OHIO 44707
PHONE: 330-477-2782
EMAIL: kconrad@sartaonline.com

UTILITIES:

LISTED BELOW ARE ALL UTILITIES LOCATED WITHIN THE PROJECT CONSTRUCTION LIMITS TOGETHER WITH THEIR RESPECTIVE OWNERS:

CABLE TV:
TIME WARNER CABLE
ATTN: TIM KNIGHT
5520 WHIPPLE AVENUE N.W.
NORTH CANTON, OHIO 44720
PHONE: 330-494-9200
EMAIL: tim.knight@twcable.com

ELECTRIC:
AMERICAN ELECTRIC POWER
ATTN: KATHY MOSSBARGER
301 CLEVELAND AVENUE S.W.
CANTON, OHIO 44720
PHONE: 330-438-7061
EMAIL: kamossbarger@aep.com

GAS:
DOMINION EAST OHIO
ATTN: MARY J. LONG
320 SPRINGSIDE DRIVE, SUITE 320
AKRON, OHIO 44333
PHONE: 330-664-2409
EMAIL: mary.j.long@dom.com

WATER:
CANTON WATER DEPARTMENT
ATTN: TYLER CONVERSE
2664 HARRISBURG ROAD N.W.
CANTON, OHIO 44705
PHONE: 330-489-3310
EMAIL: tyler.converse@cantonohio.gov

TELECOMMUNICATIONS:
AT&T OHIO
ATTN: GINO SANTILLO
50 WEST BOWERY STREET, 6TH FLOOR
AKRON, OHIO 44308
PHONE: 330-384-2245
EMAIL: ls2671@att.com

TELECOMMUNICATIONS:
STARK COUNTY AUDITOR
ATTN: SEAN DURKIN
225 4TH ST. N.E.
CANTON, OHIO 44702-1256
PHONE: 330-451-7173
EMAIL: ssdurkin@co.stark.oh.us

CITY OF CANTON - PARKING METERS
CITY OF CANTON ENGINEERING DEPARTMENT
ATTN: NICHOLAS J. LOUKAS
2436 30TH STREET N.E.
CANTON, OHIO 44705
PHONE: 330-438-4510
EMAIL: nick.loukas@cantonohio.gov

CITY OF CANTON - SANITARY SEWER
CITY OF CANTON ENGINEERING DEPARTMENT
ATTN: DOUG HARRIS
2436 30TH STREET N.E.
CANTON, OHIO 44705
PHONE: 330-438-6944
EMAIL: doug.harris@cantonohio.gov

CITY OF CANTON - STORM SEWER
CITY OF CANTON ENGINEERING DEPARTMENT
ATTN: CHRIS BARNES
2436 30TH STREET N.E.
CANTON, OHIO 44705
PHONE: 330-438-6908
EMAIL: chris.barnes@cantonohio.gov

CITY OF CANTON - TRAFFIC SIGNALS & STREET LIGHTING
CITY OF CANTON ENGINEERING DEPARTMENT
ATTN: DOUGLAS SERBAN
2436 30TH STREET N.E.
CANTON, OHIO 44705
PHONE: 330-438-6924
EMAIL: doug.serban@cantonohio.gov

CITY OF CANTON - TRAFFIC SIGN & MARKINGS
CITY OF CANTON ENGINEERING DEPARTMENT
ATTN: DANIEL E. GUTH
2506 CLEVELAND AVENUE S.W.
CANTON, OHIO 44707
PHONE: 330-438-6686
EMAIL: daniel.guth@cantonohio.gov

THE LOCATION OF THE UNDERGROUND UTILITIES SHOWN ON THE PLANS ARE AS OBTAINED FROM THE OWNERS AS REQUIRED BY SECTION 153.64 O.R.C.

STARK COUNTY AUDITOR - TELECOMMUNICATION FACILITIES:

THE STARK COUNTY AUDITOR'S OFFICE HAS COMMUNICATION FACILITIES WITHIN UNDERGROUND CONDUIT THAT EXTEND FROM ITS BUILDING LOCATION AT 225 4TH STREET N.E. TO 110 CENTRAL PLAZA S. WITHIN THIS PROJECT, THE CONDUIT EXTENDS ALONG WALNUT AVENUE BETWEEN 4TH STREET N.E. TO 2ND STREET S.E. ON THE WEST SIDE OF THE ROADWAY.

THE CONDUIT IS AS SHALLOW AS 9 INCHES FROM THE SURFACE BASED ON MEASUREMENTS PROVIDED BY ACY COMMUNICATIONS OF NORTH CANTON, OHIO.

THE APPROXIMATE LOCATION OF CONDUIT HAS BEEN SHOWN AND LABELED IN THE CONSTRUCTION PLANS. THE CONTRACTOR SHALL NOT INTERFERE OR DAMAGE THE COMMUNICATION LINES ENCLOSED IN SAID CONDUIT.

EXISTING PLANS:

THE FOLLOWING EXISTING PLANS MAY BE INSPECTED IN THE CITY OF CANTON ENGINEERING DEPARTMENT OR ODOT D-4 OFFICE IN AKRON, OHIO.

1. VARIOUS WIDENING, REPAVING, & RIGTH OF WAY PLANS FOR WALNUT AVE. & CHERRY AVE.
2. CITY OF CANTON SEWER ATLASES.
3. STA-30-DA0.17 AND STA-43-DA-0.00 ONE-WAY STREET PLAN DATED 1967.
4. STA-43-13.56 & LOCAL STREETS PART 1 DATED 1969.
5. STA-43-13.56 & LOCAL STREETS PART 1 DATED 1969.
6. STA-43-13.40 GRADE SEPARATION DATED 1970.
7. S.R. 43, S.R. 153 & LOCAL STREETS & MCKINLEY HIGH SCHOOL BUS RECESS BAY DATED 1973.

CONSTRUCTION NOISE

ACTIVITIES AND LAND USE ADJACENT TO THIS PROJECT MAY BE AFFECTED BY CONSTRUCTION NOISE. IN ORDER TO MINIMIZE ANY ADVERSE CONSTRUCTION NOISE IMPACTS, DO NOT OPERATE POWER-OPERATED CONSTRUCTION- TYPE DEVICES BETWEEN THE HOURS OF 7 A.M. AND 7 P.M. IN ADDITION, DO NOT OPERATE AT ANY TIME ANY DEVICE IN SUCH A MANNER THAT THE NOISE CREATED SUBSTANTIALLY EXCEEDS THE NOISE CUSTOMARILY AND NECESSARILY ATTENDANT TO THE REASON- ABLE AND EFFICIENT PERFORMANCE OF SUCH EQUIPMENT.

SURVEYING POSITIONAL PARAMETERS:

USE THE FOLLOWING VERTICAL AND HORIZONTAL POSITIONING PARAMETERS FOR ALL SURVEYING:

VERTICAL POSITIONING:

ORTHOMETRIC HEIGHT DATUM:	NAVD 1988
GEOID:	GEOID2009

HORIZONTAL POSITIONING:

REFERENCE FRAME:	NAD 83 (CORS 96)
ELLIPSOID:	GRS80
MAP PROJECTION:	LAMBERT CONFORMAL CONIC
COORDINATE SYSTEM:	OHIO STATE PLANE, NORTH ZONE
COMBINED SCALE FACTOR:	0.99989639169
ORIGIN OF SCALE (X,Y) -	
EASTING (X):	0.000
NORTHING (Y):	0.000

FURNISH UNITS IN U.S. SURVEY FEET. USE THE FOLLOWING CONVERSION FACTOR: 1 METER = 3.280833333 FEET.

WORK LIMITS

THE WORK LIMITS SHOWN ON THESE PLANS ARE FOR PHYSICAL CONSTRUCTION ONLY. PROVIDE THE INSTALLATION AND OPERATION OF ALL WORK ZONE TRAFFIC CONTROL AND WORK ZONE TRAFFIC CONTROL DEVICES REQUIRED BY THESE PLANS WHETHER INSIDE OR OUTSIDE THESE WORK LIMITS.

PROTECTION OF RIGHT OF WAY LANDSCAPING:

PRIOR TO BEGINNING WORK, THE CONTRACTOR, THE PROJECT ENGINEER, AND A REPRESENTATIVE OF THE MAINTAINING AGENCY WILL REVIEW AND RECORD ALL LANDSCAPING ITEMS WITHIN THE RIGHT OF WAY (BOTH WITHIN AND OUTSIDE THE CONSTRUCTION LIMITS) A RECORD OF THIS REVIEW WILL BE KEPT IN THE PROJECT ENGINEER'S FILES. PRIOR TO FINAL ACCEPTANCE, A FINAL REVIEW OF LANDSCAPING ITEMS WILL BE MADE.

CONSTRICT ALL ACTIVITIES, EQUIPMENT STORAGE, AND STAGING TO WITHIN THE CONSTRUCTION LIMITS. UNLESS OTHERWISE IDENTIFIED IN THE PLANS OR PROPOSAL, THE CONSTRUCTION LIMITS ARE IDENTIFIED AS THE EXISTING RIGHT OF WAY LIMITS.

SUBMIT A WRITTEN REQUEST TO THE PROJECT ENGINEER TO USE ANY AREA OUTSIDE THESE LIMITS. THE DOCUMENT SUBMITTED MUST CLEARLY IDENTIFY THE AREA AND EXPLAIN THE PROPOSED USE AND RESTORATION OF THE AREA. USE OF ANY AREA OUTSIDE OF THE EXISTING RIGHT OF WAY FOR DISPOSAL OF WASTE MATERIAL AND CONSTRUCTION DEBRIS, EXCAVATION OF BORROW MATERIAL AND PLACEMENT OF PORTABLE PLANTS IS PROHIBITED. THE REQUEST MUST BE APPROVED, IN WRITING, BEFORE THE CONTRACTOR HAS PERMISSION TO USE THE AREA.

ANY ITEMS DAMAGED BEYOND THE CONSTRUCTION LIMITS AS DEFINED ABOVE WILL BE REPLACED IN KIND OR AS APPROVED BY THE PROJECT ENGINEER.

CALCULATED JMK
CHECKED WLC

GENERAL NOTES

WALNUT & CHERRY
COMPLETE STREET
BIKE LANES

R:\Stark\SARTA\Task 3 Canton\STA\91592\roadway\sheets\91592GN001.dgn 6/29/2012 1:39:04 PM bill

ITEM 201 - CLEARING AND GRUBBING:
ALTHOUGH THERE ARE NO TREES OR STUMPS SPECIFICALLY MARKED FOR REMOVAL WITHIN THE LIMITS OF THE PROJECT, A LUMP SUM QUANTITY IS INCLUDED IN THE GENERAL SUMMARY FOR ITEM 201-CLEARING AND GRUBBING. ALL PROVISIONS AS SET FORTH IN THE SPECIFICATIONS UNDER THIS ITEM ARE INCLUDED IN THE LUMP SUM PRICE BID FOR ITEM 201-CLEARING AND GRUBBING.

THE FOLLOWING QUANTITY HAS BEEN CARRIED TO THE GENERAL SUMMARY:

ITEM 201 - CLEARING AND GRUBBING LUMP

ITEM 202 - PAVEMENT REMOVED, AS PER PLAN
THE CONTRACTOR SHALL REMOVE AND DISPOSE OF EXISTING BRICK PAVEMENT ENCOUNTERED WITHIN PROPOSED FULL DEPTH PAVEMENT REPLACEMENT AREAS ALONG WALNUT AVENUE AND CHERRY AVENUE AT LOCATIONS SHOWN ON THE TYPICAL SECTIONS AND ROADWAY PLAN SHEETS. PAVEMENT REMOVAL SHALL INCLUDE ALL EXISTING LAYERS FROM ASPHALT SURFACE TO BOTTOM OF BRICK.

ITEM SPECIAL - FILL AND PLUG EXISTING CONDUIT
THIS ITEM SHALL CONSIST OF THE CONSTRUCTION OF BULKHEADS IN EXISTING CONDUIT AND FILLING THE AREA THUS SEALED OFF WITH ITEM 613, SAND OR OTHER MATERIAL APPROVED BY THE ENGINEER.

BULKHEADS SHALL BE LOCATED AT THE LIMITS OF THE AREA TO BE FILLED AS INDICATED ON THE PLANS. THE BULKHEADS SHALL CONSIST OF BRICK OR CONCRETE MASONRY WITH A MINIMUM THICKNESS OF 12 INCHES.

THE FILL MATERIAL SHALL BE PUMPED INTO PLACE, OR PLACED BY OTHER MEANS APPROVED BY THE ENGINEER, SO THAT, AFTER SETTLEMENT, AT LEAST 90 PERCENT OF THE CROSS- SECTIONAL AREA OF THE CONDUIT, FOR ITS ENTIRE LENGTH, SHALL BE FILLED. THE LENGTH OF FILLED AND PLUGGED CONDUIT TO BE PAID FOR SHALL BE THE ACTUAL NUMBER OF FEET (MEASURED ALONG THE CENTERLINE OF EACH CONDUIT FROM OUTER FACE TO OUTER FACE OF BULKHEADS) FILLED AND PLUGGED AS DESCRIBED ABOVE.

IN LIEU OF FILLING AND PLUGGING THE EXISTING CONDUIT, THE PIPE MAY BE CRUSHED AND BACKFILLED IN ACCORDANCE WITH THE PROVISIONS OF 203, OR IT MAY BE REMOVED. THE LENGTH, MEASURED AS PROVIDED ABOVE, SHALL BE PAID FOR AT THE CONTRACT PRICE PER FOOT FOR, ITEM SPECIAL-FILL AND PLUG EXISTING CONDUIT.

ITEM 202 - REMOVAL, MISC.: LUMINAIRE AND BRACKET ARM
ITEM 202 - REMOVAL, MISC.: UTILITY POLE
PRIOR TO REMOVAL, THE CONTRACTOR SHALL CONTACT AMERICAN ELECTRIC POWER (AEP) TO COORDINATE REMOVAL OF AEP OWNED UTILITY POLES AND/OR EQUIPMENT ON AEP OWNED UTILITY POLES.

LISTED BELOW IS UTILITY CONTACT INFORMATION FOR THIS WORK:
AMERICAN ELECTRIC POWER
ATTN: KEN HUOT
301 CLEVELAND AVENUE S.W.
CANTON, OHIO 44720
PHONE: 330-438-7762

ITEM 202 - REMOVAL, MISC.: PARKING METER
PARKING METERS SHALL BE REMOVED BY THE CITY OF CANTON, PRIOR TO THE CONTRACTOR BEGINNING WORK ON THE. PARKING METER SUPPORT POSTS SHALL BE REMOVED BY THE CONTRACTOR AND DISPOSED OF.

ITEM 604 - MONUMENT ASSEMBLY, AS PER PLAN:
ADJUSTABLE MONUMENT ASSEMBLIES AS SHOWN ON ODOT STANDARD CONSTRUCTION DRAWING RM-1.1 WILL BE PLACED BY THE CONTRACTOR AT THE TIME OF CONSTRUCTION.

EXISTING MONUMENTATION IS EXPOSED AND KNOWN TO EXIST AT THE FOLLOWING INTERSECTIONS WITHIN THE PROJECT LIMITS:

1. WALNUT AVENUE AND 5TH STREET N.E.
2. WALNUT AVENUE AND 4TH STREET N.E.
3. WALNUT AVENUE AND 3RD STREET N.E.
4. WALNUT AVENUE AND 2ND STREET N.E.
5. WALNUT AVENUE AND 2ND STREET S.E.
6. WALNUT AVENUE AND 3RD STREET S.E.

THE CONTRACTOR SHALL NOTIFY THE CITY OF CANTON IF BURIED MONUMENTATION IS FOUND DURING PAVING OPERATIONS FOR THIS PROJECT.

THE EXISTING MONUMENTATION IS TO BE REPLACED WITH NEW ADJUSTABLE MONUMENT BOX ASSEMBLIES. PAYMEMT FOR THE REMOVAL OF ANY EXISTING MONUMENT ASSEMBLIES SHALL ALSO BE INCLUDED IN THIS ITEM.

MONUMENTS SHALL BE PLACED IN ACCORDANCE WITH REFERENCE TIES PROVIDED BY THE CONTRACTOR. THE ACTUAL PLACEMENT OF THE DATUM POINT WITHIN THE MONUMENT ASSEMBLY SHALL BE DIRECTLY AND PHYSICALLY SUPERVISED IN THE FIELD BY A LICENSED SURVEYOR IN THE STATE OF OHIO. SURVEY NOTES VERIFYING THE ACCURACY OF THE POINT SHALL BE SEALED BY THE SURVEYOR AND RETURNED TO THE CITY OF CANTON. ANY REQUEST FOR NON-PERFORMANCE SHALL BE DIRECTED IN WRITING TO THE CITY OF CANTON MUST INCLUDE PROPER WRITTEN JUSTIFICATION.

THE FOLLOWING ESTIMATED QUANTITY HAS BEEN CARRIED TO THE GENERAL SUMMARY TO REPLACE MONUMENT BOXES AT BOTH EXPOSED AND BURIED LOCATIONS

ITEM 604 - MONUMENT ASSEMBLY, AS PER PLAN 10 EACH

ITEM 608 - 5" CONCRETE WALK, AS PER PLAN
THE QUANTITY SHOWN ON GENERAL SUMMARY FOR ITEM 608 - 5" CONCRETE WALK, AS PER PLAN ASSUMES A UNIFORM DEPTH OF CONCRETE IN ALL CONCRETE WALK AREAS AND DOES NOT ACCOUNT FOR VARIABLE DEPTH AREAS ADJCENT TO WALKWAY PAVER PANEL AND RIGHT OF WAY, AS REQUIRED BY CITY OF CANTON STANDARD DRAWING NO. 40.

ITEM SPECIAL - WORK INVOLVING PETROLEUM CONTAMINATED SOIL
1.1 INTRODUCTION
ENVIRONMENTAL STUDIES HAVE SHOWN THAT THERE IS A POTENTIAL FOR ENCOUNTERING PETROLEUM CONTAMINATED SOILS (PCS) DURING EXCAVATION WITHIN THE EXCAVATION LIMITS AT THE FOLLOWING SARTA BUS SHELTER/STOP UPGRADE LOCATIONS:

A. WALNUT AVENUE @ 4TH STREET N.E., S.W. QUADRANT;
B. CHERRY AVENUE @ 4TH STREET N.E., S.E. QUADRANT;
C. CHERRY AVENUE @ 6TH STREET NE., S.E. QUADRANT;
D. CHERRY AVENUE @ HINER PLACE N.E., S.E. QUADRANT;
E. CHERRY AVENUE @ 12TH STREET N.E., S.E. QUADRANT;

IN THE EVENT THESE MATERIALS ARE ENCOUNTERED WITHIN THE AFOREMENTIONED LIMITS, THE CONTRACTOR SHALL MANAGE THESE MATERIALS ACCORDING TO THE FOLLOWING NOTES. ALL EXCAVATIONS WITHIN THE AFOREMENTIONED LIMITS SHALL BE PAID FOR UNDER THE ORIGINAL PLAN BID ITEMS.

1.2 MATERIAL HANDLING
THE CONTRACTOR SHALL PROVIDE THE ENGINEER WITH FIVE (5) DAYS NOTICE PRIOR TO ANY EXCAVATIONS WITHIN THE AFOREMENTIONED LIMITS TO PERMIT ARRANGING FORT HE NECESSARY TESTING SERVICES. ALL ME5TIRLA EXCAVATED BY THE CONTRACTOR BETWEEN THE AFOREMENTIONED LIMITS SHALL BE SUBJECT TO TESTING BY AN INSPECTOR PROVIDED BY THE ENGINEER.

ALL MATERIAL EXCAVATED BY THE CONTRACTOR BETWEEN THE AFOREMENTIONED LIMITS MAY BE STOCKPILED IN AN AREA PROVIDED BY THE CONTRACTOR AND APPROVED BY THE ENGINEER. THE CONTRACTOR SHALL STOCKPILE THE MATERIALS IN A LEAKPROOF, COVERED CONTAINER PROVIDED BY THE CONTRACTOR.

THE ENGINEER MAY PERMIT TEMPORARY STORAGE OF THE REGULATED MATERIALS ON AN IMPERMEABLE MEMBRANE. THE MEMBRANE SHALL BE SURROUNDED BY BALES OF STRAW TO PREVENT THESE MATERIALS FROM COMING IN CONTACT WITH THE ORIGINAL SOILS. AN IMPERMEABLE MEMBRANE SHALL BE PLACED OVER THE STOCKPILE TO PREVENT CONTACT WITH PRECIPITATION AND/OR SURFACE RUNOFF.

AS AN ALTERNATIVE, THE ENGINEER MAY PERMIT THE CONTRACTOR TO DIRECT LOAD THESE EXCAVATED MATERIALS FROM THE AFOREMENTIONED LIMITS INTO TRUCKS FOR SUBSEQUENT DISPOSAL.

1.3 MATERIALS SAMPLING AND DISPOSAL
THE CONTRACTOR SHALL PROPERLY TEST (FOR DISPOSAL), TRANSPORT AND DISPOSE OF THE REGULATED MATERIALS IN A LICENSED (BY THE LOCAL DEPARTMENT OF HEALTH) AND PERMITTED (BY THE OHIO ENVIRONMENTAL PROTECTION AGENCY) SOLID WASTE FACILITY. THE CONTRACTOR SHALL BE RESPONSIBLE FOR CONDUCTING SAMPLING AND ANALYSIS (FOR DISPOSAL PURPOSES) OF THE EXCAVATED MATERIALS WITHIN THE AFOREMENTIONED LIMITS. COPIES OF THE ANALYTICAL TEST RESULTS SHALL BE PROVIDED TO THE ENGINEER.

1.4 GENERAL NOTES
ALL TRANSPORT VEHICLES USED FOR THE MOVEMENT OF REGULATED MATERIALS SHALL MEET ALL APPLICABLE LOCAL, STATE, AND FEDERAL REQUIREMENTS. THE CONTRACTOR SHALL MAINTAIN RECORDS (SUCH AS MANIFESTS, LANDFILL TICKETS, DAILY LOGS, ETC.) TO DOCUMENT THE SOURCE, MOVEMENT, AND DESTINATION OF EACH TRUCKLOAD OF CONTAMINATED MATERIAL. ONE COPY OF EACH OF THESE RECORDS SHALL BE SUBMITTED TO THE ENGINEER.

ITEM SPECIAL - WORK INVOLVING PETROLEUM CONTAMINATED SOIL (CONTINUED)
1.5 BASIS OF PAYMENT
THE CONTRACTOR SHALL FURNISH ALL THE LABOR, EQUIPMENT AND MATERIALS NECESSARY TO PROPERLY HANDLE, STORE, TEST (FOR DISPOSAL), TRANSPORT AND DISPOSAL, INCLUDING ANY REQUIRED PERMITS, APPROVALS OR FEES, OF REGULATED MATERIALS WITHIN THE AFOREMENTIONED LIMITS. PAYMENT FOR THIS WORK SHALL BE MADE AT THE CONTRACT PRICE PER METRIC TON/TON. THE BASIS FOR CONVERSION FROM (CUBIC METER TO METRIC TON IS 2 METRIC TON/CUBIC METER) OR (CUBIC YARD TO TON IS 1.5 TON/CUBIC YARD). THE FOLLOWING ESTIMATED QUANTITY HAS BEEN INCLUDED IN THE GENERAL SUMMARY FOR THE WORK NOTED ABOVE:

ITEM SPECIAL - WORK INVOLVING PETROLEUM CONTAMINATED SOIL 35 TON

CALCULATED JMK
CHECKED WLC

GENERAL NOTES

WALNUT & CHERRY COMPLETE STREET BIKE LANES

R:\Stark\SARTA\Task 3 Canton\STA\91592\roadway\sheets\91592GN002.dgn 6/29/2012 1:39:39 PM bill

ITEM SPECIAL - MISC.: PARKING METER, SINGLE
ITEM SPECIAL - MISC.: PARKING METER, DOUBLE

THE CONTRACTOR SHALL FURNISH AND INSTALL PARKING METERS ACCORDING TO THE PLANS. THE PARKING METER ASSEMBLY SHALL CONSIST OF A FULLY ELECTRONIC OPERATING MECHANISM, A HOUSING, GALVANIZED PIPE, GALVANIZED PIPE FLANGE, AND A DECORATIVE BASE.

THE ELECTRONIC MECHANISM SHALL BE A HOUSING CONSTRUCTED OF ZINC OVER IRON, COMPLETE WITH LOCKS (2 EACH), FLAT, NON-GLARE DOME AND A SEALED COIN BOX. THE LOCK SHALL BE KEYED AS PER CITY STANDARDS. COLOR TO BE AMERON GLOSS BLACK.

THE DECORATIVE BASE SHALL BE ALUMINUM AND THE CONTRACTOR SHALL COVER THE PIPE FLANGE AND SIT ON THE GROUND SURFACE. THE FINISH COLOR IS TO BE AMERON GLOSS BLACK.

THE SUPPORT POST SHALL BE 2-1/2" O.D. x 5' GALVANIZED PIPE, SCHEDULE 40 W/ 1/4" WEEP HOLE. THE WEEP HOLE SHOULD BE LOCATED 6" ABOVE FINISH GRADE. THE POST SHALL BE REAMED OUT ON THE METER HEAD END. THE METER POST SHALL BE INSTALLED 36" FROM THE TOP OF THE POST TO FINISH GRADE. THE CONTRACTOR IS PERMITTED TO CORE DRILL SIDEWALK FOR POST INSTALLATION, OR A SLEEVE MAY BE INSTALLED PRIOR TO THE SIDEWALK BEING POURED.

THE POSTS SHALL BE THREADED FOR ATTACHEMENT TO A METAL FLANGE THAT WILL BE ANCHORED TO THE SIDWALK. 4-1/2" DIAMETER RESIN BONDED ANCHORS SHALL BE USED TO ATTACH THE FLANGE TO THE CONCRETE. THE ANCHORS SHALL BE EMBEDDED A MINIMUM OF 3 INCHES.

DOUBLE PARKING METERS SHALL BE SUPPLIED WITH A DOUBLE METER ADAPTER SUPPLIED BY THE METER MANUFACTURER. IT SHALL BE CONSTRUCTED OF DUCTILE CAST IRON AND HAVE A MINIMUM WALL THICKNESS OF 0.280 INCHES. THE ADAPTER SHALL BE FINISHED IN THE SAME MANNER AS THE METER BASES.

THE PARKING METER ASSEMBLIES SHALL MEET THE FOLLOWING SPECIFICATIONS:

HOUSING
1. SHALL BE ZINC ALLOY UPPER HOUSINGS WITH HIGH IMPACT, DAMAGE-RESISTANT DOME.
2. SHALL BE CONTOURED DUCTILE IRON LOWER HOUSING WITH HIGH-SECURITY INTERNAL LOCKING MECHANISM.
3. COIN BOX RETAINER SHALL ENSURE PROPER REPLACEMENT AND ALIGNMENT OF THE COIN BOX BEFORE THE VAULT DOOR IS RE-LOCKED.

LOWER HOUSING
1. SHALL BE A ONE-PIECE INTEGRAL CASTING CONSTRUCTED OF DUCTILE IRON.
2. SHALL HAVE A ROUND DOOR OPENING MACHINED TO CLOSE TOLERANCE, PROVIDING A CLOSE FIT OF VAULT DOOR.
3. DOOR SHALL BE HINGED INTERNALLY AND LOCATED ON THE FRONT OF THE LOWER HOUSING.
4. STANDARD SEALED COIN BOX SHALL BE SUPPLIED.
5. TOLERANCE BETWEEN THE LOWER HOUSING DOOR DIAMETER AND THE LOWER HOUSING DOOR OPENING SHALL NOT EXCEED .030".
6. LOCKED DOOR SHALL BE SECURED TO THE LOWER HOUSING BY TWO OPPOSING, CAM-ACTIVATED HARDENED STEEL BARS.
7. KEY-WAY CORRIDOR SHALL BE AT LEAST 5/32" DEEP FROM THE OUTSIDE SURFACE OF THE DOORS KEY-WAY TO THE FACE OF THE LOCK. IT SHALL HAVE A MINIMUM OF 0.280" NOMINAL WALL THICKNESS.

UPPER HOUSING
1. HOUSING SHALL HAVE AN IMPACT STRENGTH EQUAL TO OR EXCEEDING ZINC ALLOY ZAMAC #5.
2. CAP ASSEMBLY SHALL FIT ONTO THE MECHANISM HOUSING PORTION WITH A METAL-TO-METAL TONGUE AND GROOVE DESIGN.
3. TONGUE PORTION OF THE MECHANISM HOUSING SHOULD BE 1/8" HIGH AND CONTINUOUS EXCEPT FOR AN AREA NOT TO EXCEED 2 3/16" WHERE MECHANISM EXTENDS THROUGH THE HOUSING.
4. THE GROOVE ON THE CAP ASSEMBLY SHOULD OVERLAP THE HOUSING TONGUE PORTION BY 1/8".

ITEM SPECIAL - MISC.: PARKING METER, SINGLE (CONTINUED)
ITEM SPECIAL - MISC.: PARKING METER, DOUBLE (CONTINUED)

5. CAP ASSEMBLY IS TO BE HINGED TO THE UPPER HOUSING TO ALLOW FOR INSPECTION, REMOVAL, OR REPLACEMENT OF THE METER MECHANISM.
6. CAP STRAP SHOULD BE CAPABLE OF BEING REMOVED BY THE REMOVAL OF FOUR INTERNAL SCREWS.
7. ACCESS TO THE UPPER HOUSING IS TO BE GAINED THROUGH SEPARATE LOCK COMBINATION AND KEY, AND NOT ALLOW ACCESS TO THE COIN COMPARTMENT OF THE LOWER HOUSING.

DOME
1. SHALL BE UV RESISTANT, ONE-PIECE LENS; HIGH-IMPACT POLYCARBONATE MATERIAL; SEALED PROTECTIVE COATING.
2. COATING SHALL BE DONE USING A POWDER PAINT SYSTEM THAT APPLIES A POLYESTER TGIC POWDER PAINT ELECTROSTATICALLY AT A THICKNESS OF 2.5-3.5 ML; OVEN CURED PRIOR TO ASSEMBLY.

MECHANISM
1. SHALL OPERATE FROM -40°F (-40°C) TO 185°F (85°C).
2. SHALL HAVE NO MOVING PARTS OR EXPOSED WIRES OF ANY KIND.
3. CIRCUIT BOARDS SHALL BE COMPLETELY ENCLOSED IN A DIE-CAST METAL COVER ASSEMBLY.

POWER
1. POWERED SHALL BE SUPPLIED BY A COMMON 9V BATTERY, EASILY REPLACEABLE WITHOUT THE USE OF TOOLS.
2. MECHANISM SHALL RETAIN FULL AUDIT DATA DURING BATTERY REMOVAL AND EXCHANGE.

FRONT DISPLAY
1. SHALL HAVE LIQUID CRYSTAL DISPLAY (LCD) TECHNOLOGY.
2. SHALL DISPLAY FOUR 1/2" HIGH, NUMERIC DIGITS; TWO SHOW HOURS AND TWO SHOW MINUTES.
3. SHALL FLASH ON AND OFF WHEN TIME HAS EXPIRED (AT A PROGRAMMABLE INTERVAL).
4. SHALL DISPLAY "OUT OF ORDER" WHEN NOT FUNCTIONING PROPERLY.
5. SHALL DISPLAY INTERNATIONAL "NO PARKING" SYMBOL DURING NO PARKING PERIODS.
6. SHALL DISPLAY FLASHES WHEN TIME HAS EXPIRED (PROGRAMMABLE HALF OR TWO SECOND INTERVAL).
7. SHALL DISPLAY THE VALUE OF COIN INSERTED INTO THE MECHANISM BEFORE DISPLAYING THE TIME PURCHASED BY COIN (PROGRAMMABLE OPTION).
8. SHALL DISPLAY BATTERY LEVEL ON RESET.

REAR DISPLAY
1. SHALL HAVE LIQUID CRYSTAL DISPLAY (LCD) TECHNOLOGY.
2. SHALL DISPLAY TWO INTERNATIONAL "NO PARKING" SYMBOLS.
3. CAN HAVE A SOLID RED OR SILVER DISPLAY.
4. SHALL DISPLAY THE WORD "EXPIRED" TO SHOW EXPIRED TIME.
5. SHALL DISPLAY "OUT OF ORDER" WHEN NOT FUNCTIONING PROPERLY.

LED DISPLAY
1. SHALL BE LIGHT EMITTING DIODE (LED) TECHNOLOGY; VISIBLE FROM 50 FEET IN DARKNESS.
2. SHALL CONTAINS ONE RED LED VISIBLE THROUGH THE FRONT DOME WINDOW.

COIN ACCEPTANCE & DISCRIMINATION
1. SHALL PASS ANY NON-METALLIC MATERIAL.
2. COIN DISCRIMINATION SYSTEM SHOULD BE HOUSED IN A METAL HOUSING WITH NO EXPOSED WIRES.
3. SHALL USE A "DUAL COIL" COIN DISCRIMINATOR DEVICE AND A THIRD COIL ACTIVATION DEVICE.

COMMUNICATION & DATA TRANSFER
1. SHALL HAVE AN INFRARED (IRED) WIRELESS COMMUNICATION PORT.
2. SHALL BE CAPABLE OF REPROGRAMMING OF TIME AND RATE STRUCTURE.
3. SHALL RECOGNIZE AND VERIFY COMMANDS FROM AN AUTHORIZED HAND HELD TERMINAL ONLY; ALL OTHER SIGNALS OR DEVICES ARE IGNORED.
4. COMMUNICATION SESSIONS SHALL BE CAPABLE OF UPDATING THE TIME ON THE CLOCK AND CALENDAR SYSTEM.

PAYMENT SHALL BE FOR ALL WORK REQUIRED TO FUNISH AND INSTALL THE PARKING METERS AS SHOW ON THE PLANS.

ITEM SPECIAL - MISC.: TREE GRATE

TREE GRATES SHALL BE CONSTRUCTED IN ACCORDANCE WITH CITY OF CANTON STANDARD DRAWING NO. 43. PAYMENT FOR ITEM SPECIAL - MISC.: TREE GRATE SHALL BE MADE AT THE CONTRACT UNIT PRICE FOR EACH TREE GRATE INDICATED ON THE PLANS AND SHALL INCLUDE TREE GRATE, FRAME, CONCRETE COLLAR AND EXCAVATION AND CLEARING OF THE TREE PIT.

ITEM SPECIAL - MISC.: 2-1/4" BRICK WALKWAY PAVERS

BRICK WALKWAY PAVERS SHALL BE CONSTRUCTED IN ACCORDANCE WITH CITY OF CANTON STANDARD DRAWING NO. 40. PAYMENT FOR ITEM SPECIAL - MISC.: 2-1/4" BRICK WALKWAY PAVERS SHALL BE MADE AT THE CONTRACT UNIT PRICE PER SQUARE FOOT OF BRICK WALKWAY PAVER AREAS INDICATED ON THE PLANS AND SHALL INCLUDE BRICK WALKWAY PAVERS AND 1-INCH SAND SETTING BED ON WATER SEAL.

ITEM SPECIAL - MISC.: TYPICAL MAJOR BRT STOP WITH BUS SHELTER
ITEM SPECIAL - MISC.: TYPICAL MINOR BRT STOP WITHOUT BUS SHELTER

EACH MAJOR BRT BUS STOP SHALL INCLUDE A BUS SHELTER, BENCH, TRASH RECEPTABLE, BIKE RACK, STATION ID SIGN, AND HANGER BRACKET. THE COSTS FOR ALL CONCRETE PAVEMENT, CURBS, SIDEWALKS, BRICKS, AND LIGHTING SHALL BE INCLUDED IN THE APPROPRIATE PAY ITEMS IN THE ROADWAY PLANS. PAYMENT FOR THE MAJOR BRT STOP ITEMS SHALL BE INCLUDED WITH ITEM SPECIAL - MISC.: TYPICAL MAJOR BRT STOP WITH SHELTER (EACH) FOR PAYMENT.

EACH MINOR BRT BUS STOP SHALL INCLUDE A STREET POLE WITH FINIAL AND DECORATIVE BASE, CURVED BENCH, TRASH RECEPTABLE, STATION ID SIGN, AND HANGER BRACKET. THE COSTS FOR ALL CONCRETE PAVEMENT, CURBS, SIDEWALKS, BRICKS, AND LIGHTING SHALL BE INCLUDED IN THE APPROPRIATE PAY ITEMS IN THE ROADWAY PLANS. PAYMENT FOR THE MINOR BRT STOP ITEMS SHALL BE INCLUDED WITH ITEM SPECIAL - MISC.: TYPICAL MINOR BRT STOP WITHOUT BUS SHELTER (EACH) FOR PAYMENT.

SEE PLAN SHEET NO. 133-134 FOR MAJOR AND MINOR BRT STOP NOTES, DETAILS, AND SPECIFICATIONS. SEE PLAN SHEET NO. 135 FOR BRT STOP ID SIGN NOTES, DETAILS, AND SPECIFICAITONS.

ITEM SPECIAL - MISC.: BRICK BOX FORM

BRICK BOX FORMS SHALL BE CONSTRUCTED TO FACILITATE CONSTRUCTION OF THE BRICK WALKWAY PAVERS. PAYMENT FOR ITEM SPECIAL - MISC.: BRICK BOX FORMS SHALL BE MADE AT THE CONTRACT UNIT PRICE PER SQUARE FOOT OF BRICK WALKWAY PAVER AREAS INDICATED ON THE PLANS.

ITEM SPECIAL - MISC.: PRE-CONSTRUCTION VIDEO TAPING

THE CONTRACTOR SHALL PROVIDE A PRE-CONSTRUCTION AUDIO-VIDEO RECORDING OF THE EXISTING CONDITIONS WITHIN THE PROJECT LIMTS PRIOR TO CONSTRUCTION TO SERVE AS A RECORD OF PRE-CONSTRUCTION CONDITIONS.

THE VIDEO RECORDING SHALL BE OF PROFESSIONAL QUALITY THAT WILL CLEARLY LOG AN ACCURATE VISUAL DESCRIPTION OF THE EXISTING CONDITIONS AND THE AUDIO PORTION OF THE RECORDING SHALL PRODUCE THE COMMENTARY OF THE CAMERA OPERATOR WITH PROPER VOLUME, CLARITY, AND BE FREE FROM DISTORTION. COMMENTARY SHALL INCLUDE THE DATE AND TIEM, STREET NAME, LOCATION, INTERSECTING STREETS AS THEY ARE CROSSED AND OCCASIONAL ADDRESSES ALONG THE STREET; COMMENTS ON THE CONDITIONS OF THE PAVEMENT AND OR HOMES AND DRIVEWAYS AT THE TIME OF THE VIDEO AND ANY OTHER PERTINENT ITEMS.

THE COLOR VIDEO SHALL BE ON A MINI-DV PREMIUM TAPE QUALITY OF HIGHER AND SHALL BE TRANSFERED TO A DVD WHEN COMPLETE. THE CONTRACTOR SHALL SUBMIT THE FINAL DVD TO THE CITY OF CANTON PRIOR TO CONSTRUCTION.

THE FOLLOWING QUANTITY HAS BEEN CARRIED TO THE GENERAL SUMMARY:

ITEM SPECIAL - MISC.: PRE-CONSTRUCTION VIDEO TAPING LUMP

CALCULATED JMK
CHECKED WLC

GENERAL NOTES

WALNUT & CHERRY
COMPLETE STREET
BIKE LANES

R:\Stark\SARTA\Task 3 Canton\STA\91592\roadway\sheets\91592GN003.dgn 6/29/2012 1:40:14 PM bill

ITEM SPECIAL - MISC.: VIDEO RECORDING DATA COLLECTION SYSTEM

THE CONTRACTOR SHALL SUPPLY AND INSTALL SIX CAMERAS AND THREE RECORDERS FOR THE PROJECT. THE CAMERAS SHALL BE MOUNTED ON THE MAST ARMS AT THE INTERSECTIONS OF WALNUT AVENUE NE AND 9TH STREET NE, 5TH STREET NE, AND TUSCARAWAS STREET. ONE CAMERA SHALL POINT NORTH AND ONE SHALL POINT SOUTH AT EACH INTERSECTION. ONE RECORDER SHALL BE SUPPLIED AT EACH INTERSECTION AND SHALL BE LOCATED IN THE NEAREST TRAFFIC CONTROL BOX. POWER SHALL BE SUPPLIED TO THE UNIT AND THE CAMERAS SHALL BE POWERED FROM THE RECORDER. THE FINAL PLACEMENT OF THE EQUIPMENT FOR THIS ITEM SHALL BE ESTABLISHED IN THE FIELD IN COORDINATION WITH THE CITY OF CANTON.

THE CONTRACTOR WILL SUBMIT FOR APPROVAL EQUIPMENT SPECIFICATIONS, MANUFACTURERS/SUPPLIERS CONTACT INFORMATION AND OTHER PERTINENT INFORMATION PRIOR TO ORDERING ANY OF THE COMPONENTS. THE CAMERAS AND RECORDERS MUST WORK TOGETHER AND WILL BE TESTED PRIOR TO INSTALLATION.

CAMERA

1. CAMERA SHALL BE AN OUTDOOR-READY FIXED CAMERA WITH H.264 COMPRESSION. THE CAMERAS SHALL HAVE A 5-MEGAPIXEL RESOLUTION AND ALSO DELIVER HDTV 720P/1080P VIDEO.
2. THERE SHALL BE CONTROLS TO PRECISELY ALLOW THE CAMERAS TO CONTROL THE IRIS POSITION TO OPTIMIZE DEPTH OF FIELD AND LENS RESOLUTION FOR OPTIMAL IMAGE SHARPNESS.
3. THE CAMERA SHALL HAVE A REMOTE BACK FOCUS FUNCTION THAT ENABLES THE FOCUS TO BE FINE-TUNED FROM A COMPUTER. THE CAMERA SHALL HAVE A DIGITAL PAN/TILT/ZOOM, AND PROVIDE MULTI-VIEW STREAMING.
4. CAMERA SHALL BE SUPPLIED WITH HARDWARE FOR MOUNTING TO TRAFFIC SIGNAL MAST ARM AND CABLE TO CONNECT TO RECORDER PLACED IN TRAFFIC CONTROL BOX.

MINIMUM SPECIFICATIONS:
RESOLUTION: 5 MP, DAY AND NIGHT
IMAGE SENSOR: PROGRESSIVE SCAN RGB CMOS 1/2.5"
LENS: IR-CORRECTED, CS-MOUNT LENS, VARIFOCAL 3.5-10 MM: 89° - 33° VIEW (HORIZONTAL ANGLE OF VIEW), F1.6, P-IRIS; DC-IRIS LENSES ALSO SUPPORTED
MINIMUM ILLUMINATION: COLOR: 0.5 LUX, B/W: 0.08 LUX, F1.6
SHUTTER TIME: 1/25500 S TO 1/6 S
VIDEO COMPRESSIONH.264 (MPEG-4 PART 10/AVC), MOTION JPEG
RESOLUTIONS: 2560X1920 (5 MP) TO 160X90
FRAME RATE H.264/MOTION JPEG: 5 MP MODE: 12 FPS IN ALL RESOLUTIONS
VIDEO STREAMING: MULTIPLE, INDIVIDUALLY CONFIGURABLE STREAMS IN H.264 AND MOTION JPEG
CONTROLLABLE FRAME RATE AND BANDWIDTH
MULTI-VIEW STREAMING: UP TO 8 INDIVIDUALLY CROPPED OUT VIEW AREAS. WHEN STREAMING 4 VIEW AREAS IN VGA RESOLUTION.
PAN/TILT/ZOOM: DIGITAL PTZ, PRESET POSITIONS, GUARD TOUR
IMAGE SETTINGS: COMPRESSION, COLOR, BRIGHTNESS, SHARPNESS, CONTRAST, WHITE BALANCE, EXPOSURE CONTROL, EXPOSURE ZONES, BACKLIGHT COMPENSATION, FINE TUNING OF BEHAVIOR AT LOW LIGHT, ROTATION, MIRRORING OF IMAGES, WIDE DYNAMIC CONTRAST, TEXT AND IMAGE OVERLAY, PRIVACY MASK, CORRIDOR FORMAT
INTELLIGENT VIDEO: VIDEO MOTION DETECTION, ACTIVE TAMPERING ALARM, AUDIO DETECTION, AXIS CAMERA APPLICATION PLATFORM
EVENTS: INTELLIGENT VIDEO, EXTERNAL INPUT
ALARM ACTIONS: FILE UPLOAD VIA FTP, HTTP AND EMAIL; NOTIFICATION VIA EMAIL, HTTP AND TCP; EXTERNAL OUTPUT ACTIVATION; VIDEO AND AUDIO RECORDING TO EDGE STORAGE; PRE- AND POST-ALARM VIDEO BUFFERING
INSTALLATION AIDS: FOCUS ASSISTANT, PIXEL COUNTER, REMOTE BACK FOCUS
CASING: CAMERA: METAL (ZINC)
IP66- AND NEMA 4X-RATED, IK10 IMPACT-RESISTANT ALUMINUM ENCLOSURE WITH INTEGRATED DEHUMIDIFYING MEMBRANE

ITEM SPECIAL - MISC.: VIDEO RECORDING DATA COLLECTION SYSTEM

MINIMUM SPECIFICATIONS, CONTINUED:
COLOR: WHITE NCS S 1002-B
PROCESSOR AND MEMORY: ARTPEC-3, 256 MB RAM, 128 MB FLASH
POWER: POE IEEE 802.3AF MAX. 12.95 W OR HIGH POE MAX 25.5 W
CONNECTORS: RJ-45 10BASE-T/100BASE-TX POE; 3.5 MM MIC/LINE IN, 3.5 MM LINE OUT; TERMINAL BLOCKS FOR POWER, 1 ALARM INPUT AND 1 OUTPUT
EDGE STORAGE: SD/SDHC MEMORY CARD SLOT (CARD TO BE SUPPLIED) SUPPORT FOR RECORDING TO NETWORK SHARE (NETWORK ATTACHED STORAGE OR FILE SERVER)
OPERATING CONDITIONS: -30 °C TO 50 °C (-22 °F TO 122 °F) WITH POE; DOWN TO -40 °C (-40 °F) WITH HIGH POE
WEIGHT: 10 LB. MAXIMUM
INCLUDED ACCESSORIES: STAND, CONNECTOR KIT, INSTALLATION GUIDE, CD WITH INSTALLATION TOOLS, RECORDING SOFTWARE AND USER'S MANUAL, WINDOWS DECODER 1-USER LICENSE, POST MOUNT BRACKET, SUNSHIELD, CABLE GLANDS

DIGITAL VIDEO RECORDER (DVR):
A RECORDER WILL BE SUPPLIED THAT IS CAPABLE OF CONNECTING TWO CAMERAS AT EACH LOCATION. IT WILL BE MOUNTED IN THE NEAREST TRAFFIC CONTROL BOX AND BE CAPABLE OF CONTINUOUS RECORDING. THE RECORDER WILL HAVE THE FOLLOWING MINIMUM SPECIFICATIONS.

MINIMUM CAPABILITIES:
MAXIMUM RESOLUTION MULTIMEGAPIXEL (IP CAMERAS)
VIDEO CODEC (ANALOG CAMERAS) H.264 (MPEG4 PART 10)
OS MICROSOFT WINDOWS SERVER
STORAGE CAPACITY 20 TB, RAID
WATERMARKING
MOTION DETECTION
MULTI-SCREEN PLAYBACK
SAVED SEARCHES
ONE-CLICK IMAGE AND VIDEO EXPORT (PC, EMAIL, USB), CD-RW OPTIONAL
LONG-TERM EVENT STORAGE

SPECIFICATIONS:
DRIVE TYPE SATA
RAID
FRONT ACCESSIBLE, HOT SWAPPABLE RAID DRIVES
HOT SPARE. AUTO REBUILD TO PRE-LOADED HOT SPARE
EXPORTING PC, EMAIL, OR USB; CD-RW OPTIONAL
TYPE OF CAMERAS SUPPORTED IP, MP, AND PTZ CAMERAS SUPPORTED
DUAL PLAY OUTPUT 1 X SVGA
NETWORK 4 X 1 GB ETHERNET PORT
USB 3
SERIAL PORT 1 RS-232
SERIAL PORT EXPANSION, UP TO 8 RS 232/422/485 PORTS VIA USB
VISUAL INDICATORS POWER, DISK ACTIVITY, HEALTH MONITORING
ENVIRONMENTAL:
OPERATING TEMPERATURE -10° TO 120°F
HUMIDITY 10% TO 90% RH (NONCONDENSING)

ELECTRICAL:
POWER 100-240 VAC; 7-3.5 A, 60/50 HZ,
CONSUMPTION 750 W (MAX)

PAYMENT:
PAYMENT FOR THIS ITEM WILL INCLUDE ALL LABOR, EQUIPMENT, AND MATERIAL TO SUPPLY AND INSTALL SIX CAMERAS AND THREE DIGITAL VIDEO RECORDERS (DVR). THIS WILL INCLUDE, BUT NOT BE LIMITED TO, WIRING/CABLING TO CONNECT THE CAMERAS TO THE DVR'S, POWERING THE SYSTEM, TESTING THE EQUIPMENT, INSTALLATION OF THE COMPONENTS, ADJUSTMENT OF THE CAMERA ANGLE PER THE CITY REQUIREMENTS, AND SUPPLYING ALL MANUALS AND WARRANTY INFORMATION FOR THE COMPONENTS.

ITEM SPECIAL - MISC.: VIDEO RECORDING DATA COLLECTION SYSTEM LUMP

EARTHWORK QUANTITIES

NO SPECIFIC CROSS SECTIONS HAVE BEEN PROVIDED FOR THIS PROJECT. THE FOLLOWING ESTIMATED QUANTITIES HAVE BEEN INCLUDED IN THE GENERAL SUMMARY FOR ANY CONTRACTOR EARTH DISTURBING ACTIVITIES, INCLUDING FULL DEPTH PAVEMENT REPLACEMENT AREAS AND PAVEMENT REMOVAL AREAS AT THE LOCATIONS INDICATED IN THE CONSTRUCTION PLANS.

ITEM 203 - EXCAVATION	1200 CU YD
ITEM 203 - EMBANKMENT	50 CU YD
ITEM 659 - SEEDING AND MULCHING	200 SQ YD

SEEDING AND MULCHING:

THE FOLLOWING QUANTITIES ARE PROVIDED TO PROMOTE GROWTH AND CARE OF PERMANENT SEEDED AREAS:

SUBTOTAL ITEM 659 - SEEDING AND MULCHING 200 SQ YD

ITEM 659 - SOIL ANALYSIS TEST
TOTAL ITEM 659 - TOPSOIL = 1 CU YD
USE 1 TEST / 10000 CU YD OF TOPSOIL (2 EACH MINIMUM FOR PROJECT)
(1 CU YD) X (1 / 10000) = 0.0001 2 EACH

ITEM 659 - TOPSOIL
USE 111 CU YD / 1000 SQ YD OF PERMANENT SEEDING AREA
(200 SQ YD) X (111 / 1000) = 22.2 23 CU YD

ITEM 659 - COMMERCIAL FERTILIZER
USE 1 TON / 7410 SQ YD OF PERMANENT SEEDING AREA
(200 SQ YD) X (1 / 7410) = 0.03 0.03 TON

ITEM 659 - LIME
APPLY OVER PERMANENT SEEDING AREA
(200 SQ YD) X (1 / 43560) (9) = 0.001 0.04 ACRE

ITEM 659 - WATER
USE 2 APPLICATIONS EACH AT
0.0027 M GAL / SQ YD OF PERMANENT SEEDING AREA
(200 SQ YD) X (2) (0.0027) = 1.1 2 M GAL

SEEDING AND MULCHING SHALL BE APPLIED TO ALL AREAS OF EXPOSED SOIL BETWEEN THE RIGHT OF WAY LINES, AND WITHIN THE CONSTRUCTION LIMITS FOR AREAS OUTSIDE THE RIGHT OF WAY LINES COVERED BY WORK AGREEMENT OR SLOPE EASEMENT. QUANTITY CALCULATIONS FOR SEEDING AND MULCHING ARE BASED ON THESE LIMITS.

ITEM 661 - DECIDUOUS TREE, 3" CALIPER (BY TYPE):

THE FOLLOWING TYPES OF TREES SHALL BE PLANTED FOR THIS PROJECT: CLEVELAND SELECT PEAR, IVORY SILK LILAC, AND SUN VALLEY MAPLE.

AFTER THE TREE GRATES HAVE BEEN INSTALLED AT THE LOCATIONS INDICATED IN THE CONSTRUCTION PLANS, THE CONTRACTOR SHALL CONTACT AND MEET WITH THE CITY OF CANTON TO FINALIZE LOCATIONS FOR SPECIFIC TREE TYPES.

THE FOLLOWING ESTIMATED QUANTITES HAVE BEEN INCLUDED IN THE GENERAL SUMMARY:

ITEM 661 - DECIDUOUS TREE, 3" CALIPER (CLEVELAND SELECT PEAR)	6 EACH
ITEM 661 - DECIDUOUS TREE, 3" CALIPER (IVORY SILK LILAC)	6 EACH
ITEM 661 - DECIDUOUS TREE, 3" CALIPER (SUN VALLEY MAPLE)	6 EACH

CALCULATED JMK
CHECKED WLC

GENERAL NOTES

WALNUT & CHERRY COMPLETE STREET BIKE LANES

R:\Stark\SARTA\Task 3 Canton\STA\91592\roadway\sheets\91592GN004.dgn 6/29/2012 1:40:40 PM bill

CROSSINGS AND CONNECTIONS TO EXISTING PIPES AND UTILITIES:
WHERE PLANS PROVIDE FOR A PROPOSED CONDUIT TO BE CONNECTED TO, OR CROSS OVER OR UNDER AN EXISTING SEWER OR UNDERGROUND UTILITY, THE CONTRACTOR SHALL LOCATE THE EXISTING PIPES OR UTILITIES BOTH AS TO LINE AND GRADE BEFORE STARTING TO LAY THE PROPOSED CONDUIT.

IF IT IS DETERMINED THAT THE ELEVATION OF THE EXISTING CONDUIT, OR EXISTING APPURTENANCE TO BE CONNECTED, DIFFERS FROM THE PLAN ELEVATION OR RESULTS IN A CHANGE IN THE PLAN CONDUIT SLOPE, THE ENGINEER SHALL BE NOTIFIED BEFORE STARTING CONSTRUCTION OF ANY PORTION OF THE PROPOSED CONDUIT WHICH WILL BE AFFECTED BY THE VARIANCE IN THE EXISTING ELEVATIONS.

IF IT IS DETERMINED THAT THE PROPOSED CONDUIT WILL INTERSECT AN EXISTING SEWER OR UNDERGROUND UTILITY IF CONSTRUCTED AS SHOWN ON THE PLAN, THE ENGINEER SHALL BE NOTIFIED BEFORE STARTING CONSTRUCTION OF ANY PORTION OF THE PROPOSED CONDUIT WHICH WOULD BE AFFECTED BY THE INTERFERENCE WITH AN EXISTING FACILITY.

PAYMENT FOR ALL THE OPERATIONS DESCRIBED ABOVE SHALL BE INCLUDED IN THE CONTRACT PRICE FOR THE PERTINENT 603 CONDUIT ITEM.

REVIEW OF DRAINAGE FACILITIES:
BEFORE ANY WORK IS STARTED ON THE PROJECT AND AGAIN BEFORE FINAL ACCEPTANCE BY THE STATE, REPRESENTATIVES OF THE STATE AND THE CONTRACTOR, ALONG WITH LOCAL REPRESENTATIVES, SHALL MAKE AN INSPECTION OF ALL EXISTING SEWERS WHICH ARE TO REMAIN IN SERVICE AND WHICH MAY BE AFFECTED BY THE WORK. THE CONDITION OF THE EXISTING CONDUITS AND THEIR APPURTENANCE SHALL BE DETERMINED FROM FIELD OBSERVATIONS. RECORDS OF THE INSPECTION SHALL BE KEPT IN WRITING BY THE STATE.

ALL NEW CONDUITS, INLETS, CATCH BASINS, AND MANHOLES CONSTRUCTED AS A PART OF THE PROJECT SHALL BE FREE OF ALL FOREIGN MATTER AND IN A CLEAN CONDITION BEFORE THE PROJECT WILL BE ACCEPTED BY THE STATE.

ALL EXISTING SEWERS INSPECTED INITIALLY BY THE ABOVE MENTIONED PARTIES SHALL BE MAINTAINED AND LEFT IN A CONDITION REASONABLY COMPARABLE TO THAT DETERMINED BY THE ORIGINAL INSPECTION. ANY CHANGE IN THE CONDITION RESULTING FROM THE CONTRACTOR'S OPERATIONS SHALL BE CORRECTED BY THE CONTRACTOR TO THE SATISFACTION OF THE ENGINEER.

PAYMENT FOR ALL OPERATIONS DESCRIBED ABOVE SHALL BE INCLUDED IN THE CONTRACT PRICE FOR THE PERTINENT 603 CONDUIT ITEMS.

UNRECORDED STORM WATER DRAINAGE:
FURNISH A CONTINUANCE FOR ALL UNRECORDED STORM WATER DRAINAGE, SUCH AS ROOF DRAINS, FOOTER DRAINS, OR YARD DRAINS, DISTURBED BY THE WORK. FURNISH EITHER AN OPEN CONTINUANCE OR AN UNOBSTRUCTED CONTINUANCE BY CONNECTING A CONDUIT THROUGH THE CURB OR INTO A DRAINAGE STRUCTURE. THE LOCATION, TYPE, SIZE AND GRADE OF THE NEEDED CONDUIT TO REPLACE OR EXTEND AN EXISTING DRAIN WILL BE DETERMINED BY THE ENGINEER. ALL SUCH CONTINUANCE REQUIRES A RIGHT OF WAY USE PERMIT.

THE FOLLOWING CONDUIT TYPES MAY BE USED: 707.33, 707.41 NON-PERFORATED, 707.42, 707.43, 707.45, 707.46, 707.47, 707.51, 707.52 SDR35.

THE FOLLOWING ESTIMATED QUANTITIES HAVE BEEN INCLUDED IN THE GENERAL SUMMARY FOR USE AS DIRECTED BY THE ENGINEER FOR THE WORK NOTED ABOVE:

ITEM 603 - 4" CONDUIT, TYPE B	50 FT
ITEM 603 - 4" CONDUIT, TYPE C	50 FT
ITEM 603 - 6" CONDUIT, TYPE B	50 FT
ITEM 603 - 6" CONDUIT, TYPE C	50 FT

MANHOLES, CATCH BASINS AND INLETS REMOVED OR ABANDONED
ALL CASTINGS SHALL BE CAREFULLY REMOVED AND STORED WITHIN THE RIGHT OF WAY FOR SALVAGE BY (STATE) (CITY) (VILLAGE) (COUNTY) FORCES.

PAYMENT FOR ALL OF THE ABOVE SHALL BE INCLUDED IN THE CONTRACT PRICE FOR THE PERTINENT 202 ITEM.

LISTED BELOW IS CONTACT INFORMATION FOR THIS WORK:
CITY OF CANTON
ATTN: JAMES DIMARZIO
2901 REGENT AVE. N.E.
CANTON, OHIO 44705
PHONE: 330-438-6941

ITEM SPECIAL - MISCELLANEOUS METAL:
EXISTING CASTINGS MAY PROVE TO BE UNSUITABLE FOR REUSE, AS DETERMINED BY THE ENGINEER. IT SHALL BE THE CONTRACTOR'S RESPONSIBILITY TO PROVIDE THE CASTINGS OF THE REQUIRED TYPE, SIZE AND STRENGTH (HEAVY OR LIGHT DUTY) FOR THE PARTICULAR STRUCTURE IN QUESTION. ALL MATERIAL SHALL MEET ITEM 604 OF THE SPECIFICATIONS AND SHALL HAVE THE PRIOR APPROVAL OF THE ENGINEER.

THE FOLLOWING ESTIMATED QUANTITY HAS BEEN CARRIED TO THE GENERAL SUMMARY FOR USE AS DIRECTED BY THE ENGINEER.

ITEM SPECIAL - MISCELLANEOUS METAL	1000 POUND

THE CONTRACTOR IS CAUTIONED TO USE EXTREME CARE IN THE REMOVAL, STORAGE AND REPLACEMENT OF ALL EXISTING CASTINGS. CASTINGS DAMAGED BY THE NEGLIGENCE OF THE CONTRACTOR, AS DETERMINED BY THE ENGINEER, SHALL BE REPLACED WITH THE PROPER NEW CASTINGS AT THE EXPENSE OF THE CONTRACTOR.

ITEM 604 - CATCH BASIN ADJUSTED TO GRADE, AS PER PLAN
DUE TO THE EXTENSION OF NEW CURB AND SIDEWALK AT THE INTERSECTIONS, EXISTING CATCH BASINS ALONG THE EDGE OF ROADWAY WILL BE UNUSEABLE.

THE CONTRACTOR SHALL REMOVE THE EXISTING CASTING AND GRATE, ADJUST THE HEIGHT OF THE SUPPORTING WALLS, AND INSTALL AN ACCEPTABLE ADJUSTING DEVICE APPROVED BY THE ENGINEER TO THE NEW SIDEWALK GRADE. AN ACCEPTABLE SOILID CAST IRON ACCESS COVER/HATCH OR SOILID HEAVY DUTY ALUMINUM ACCESS COVER/HATCH AS APPROVED BY THE ENGINEER SHALL BE FITTED ON THE TOP OF THE NEW CASTING AND SHALL BE FLUSH WITH THE TOP OF PROPOSED SIDEWALK ELEVATION. ALL EXISTING SEWER LATERALS WITHIN THE EXISTING DRAINAGE STRUCTURE SHALL NOT BE DISTURBED DURING THE ADJUSTMENT TO GRADE.

ALL COST ASSOCIATED WITH REMOVING THE EXISTING CASTING AND GRATE, ADJUSTMENT OF EXISTING DRAINAGE STRUCTURE, AND NEW SOLID COVERS SHALL BE INCLUDED UNDER THIS ITEM.

ITEM 604 - CATCH BASIN GRATE, AS PER PLAN:
THE FOLLOWING ESTIMATED QUANTITIES HAVE BEEN INCLUDED IN THE GENERAL SUMMARY FOR USE AS DIRECTED BY THE ENGINEER FOR REPLACEMENT OF EXISTING CATCH BASIN GRATES WITH BICYCLE SAFE GRATES.

ITEM 604 - CATCH BASIN GRATE, AS PER PLAN	20 EACH

BICYCLE SAFE GRATES SHALL BE NEENAH NO. R-4859-C OR EAST JORDAN NO. 5110 TYPE M3 OR APPROVED EQUALS.

CALCULATED JMK
CHECKED WLC

GENERAL NOTES

WALNUT & CHERRY
COMPLETE STREET
BIKE LANES

R:\Stark\SARTA\Task 3 Canton\STA\91592\roadway\sheets\91592GN005.dgn 6/29/2012 1:41:03 PM bill

PROFILE AND ALIGNMENT:
PLACE THE PROPOSED PAVEMENT TO FOLLOW THE ALIGNMENT AND PROFILE OF THE EXISTING PAVEMENT. PLACE THE PROPOSED ASPHALT CONCRETE OVERLAY (WITH A UNIFORM THICKNESS OF 3/4 INCHES AS SHOWN ON THE TYPICAL SECTIONS.

CONTRACTION JOINTS IN CONCRETE PAVEMENT OR BASE WIDENING:
WHERE NEW CONCRETE IS PLACED ADJACENT TO AND TIED TO EXISTING CONCRETE, THE CONTRACTION JOINT SPACING REQUIRED IN STANDARD CONSTRUCTION DRAWING BP-2.2 WILL BE WAIVED. CONSTRUCT CONTRACTION JOINTS IN THE NEW CONCRETE PAVEMENT TO FORM A CONTINUOUS LINE WITH ALL CONTRACTION JOINTS IN THE EXISTING CONCRETE PAVEMENT. INSTALL EXPANSION JOINTS IN THE NEW CONCRETE PAVEMENT TO FORM A CONTINUOUS LINE WITH ALL EXPANSION JOINTS IN THE EXISTING CONCRETE PAVEMENT.

PART WIDTH CONSTRUCTION:
BECAUSE OF THE NECESSITY TO BUILD THIS PROJECT UNDER TRAFFIC AND TO CONSTRUCT THE FULL PAVEMENT WIDTH IN STAGES, EXERCISE CARE TO PREVENT THE CONSTRUCTION OF A BUTT JOINT IN THE BASE COURSES. LAP LONGITUDINAL JOINTS AS SHOWN ON STANDARD CONSTRUCTION DRAWING BP-3.1.

RESURFACING AT INTERSECTIONS
INTERSECTIONS AT ALLEYS WILL BE RESURFACED TO AN OFFSET DISTANCE OF 25 FT. OFFSET FROM THE CENTERLINE OF EXISTING RIGHT OF WAY AND CONSTRUCTION WALNUT AVENUE, UNLESS OTHERWISE DIRECTED BY THE ENGINEER OR INDICATED IN THE PLAN. INTERSECTIONS AT SIDE STREETS WILL BE RESURFACED TO STATION LIMITS AS INDICATED IN THE PLANS.

INTERSECTIONS SHALL BE PAVED AFTER COMPLETION OF THE SURFACE COURSE OR WITH THE MAINLINE PAVEMENT IF THIS CAN BE ACCOMPLISHED WITHOUT CHANGING THE VELOCITY AND DIRECTION OF THE PAVER. USE THE SAME ASPHALT CONCRETE AS THE MAINLINE PAVEMENT. PROVIDE A SMOOTH TRANSITION TO THE EXISTING PAVEMENT. ANY GRADING OR PRIME NECESSARY TO ACCOMPLISH THIS WORK SHALL BE INCLUDED IN THE COST OF THE PERTINENT BID ITEM.

ITEM 251 - PARTIAL DEPTH PAVEMENT REPAIR:
A QUANTITY OF THIS ITEM SHALL BE PROVIDED FOR USE AS DIRECTED BY THE ENGINEER. THE ITEM SHALL CONSIST OF REPAIRING EXISTING LOCATIONS EXHIBITING SURFACE DETERIORATION AND PLACING ITEM 448 - ASPHALT CONCRETE, INTERMEDIATE COURSE, TYPE 2, PG64-28. THE ASPHALT CONCRETE SHALL BE COMPACTED WITH A TYPE I PNEUMATIC TIRE ROLLER AND A STEEL WHEEL ROLLER AS PER 401.13. IT IS NOT THE INTENT TO REPAIR EVERY DETERIORATED AREA WITHIN THE PROJECT. THE ENGINEER SHALL DETERMINE WHICH AREAS ARE TO BE REPAIRED. UNLESS OTHERWISE DIRECTED BY THE ENGINEER, THIS ITEM SHALL BE PERFORMED AFTER THE COMPLETION OF MAINLINE PAVEMENT PLANING. ALSO, THIS ITEM SHALL COMMENCE WITHIN 7 DAYS OF THE COMPLETION OF MAINLINE PAVEMENT PLANING. PAYMENT SHALL BE BASED ON THE ACTUAL NUMBER OF SQUARE YARDS OF PAVEMENT REPAIR. THE FOLLOWING ESTIMATED QUANTITY HAS BEEN CARRIED TO THE GENERAL SUMMARY

ITEM 251 - PARTIAL DEPTH PAVEMENT REPAIR 400 SQ YD

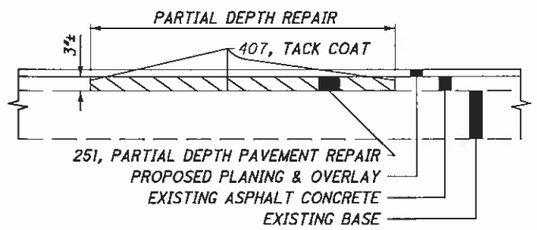

ITEM 252 - FULL DEPTH PAVEMENT SAWING
THE CONTRACTOR SHALL FULL DEPTH SAW CUT EXISTING BRICK PAVEMENT ENCOUNTERED ALONG PROPOSED FULL DEPTH PAVEMENT REPLACEMENT AREAS ALONG WALNUT AVENUE AND CHERRY AVENUE AT LOCATIONS SHOWN ON THE TYPICAL SECTIONS AND ROADWAY PLAN SHEETS. FULL DEPTH SAW CUTS SHALL INCLUDE ALL EXISTING LAYERS FROM ASPHALT SURFACE TO BOTTOM OF BRICK OR CONCRETE PAVEMENT.

ITEM 304 - AGGREGATE BASE, AS PER PLAN
GRANULATED SLAG (GS) SHALL NOT BE PERMITTED FOR THIS ITEM. ALL OTHER REQUIREMENTS OF SECTIONS 304 AND 703.17 OF THE CONSTRUCTION AND MATERIAL SPECIFICATIONS SHALL STILL BE APPLICABLE.

CALCULATED JMK
CHECKED WLC

GENERAL NOTES

WALNUT & CHERRY COMPLETE STREET BIKE LANES

R:\Stark\SARTA\Task 3 Canton\STA\91592\roadway\sheets\91592GN006.dgn 6/29/2012 1:41:27 PM bill

CANTON WATER DEPARTMENT GENERAL NOTES:

WATER MAINS/SERVICES: ALL WATER MAINS, SERVICES AND APPURTENANCES SHALL BE DESIGNED AND CONSTRUCTED ACCORDING TO THE CITY OF CANTON WATER DEPARTMENT REQUIREMENTS AND SPECIFICATIONS IN EFFECT AT THE TIME OF CONSTRUCTION.

FOR NEW DEVELOPMENTS INSIDE THE CITY, ALL WATER MAIN PIPE MATERIALS, FITTINGS, BENDS, VALVES, VALVE BOXES, MEGALUGS, GASKETS AND HYDRANTS WILL BE SUPPLIED BY THE CITY OF CANTON. THE CONTRACTOR WILL BE RESPONSIBLE FOR TRANSPORTING MATERIALS TO THE PROJECT SITE. BACKFILL, BEDDING, THRUST BLOCKING, ETC. AND ASSOCIATED LABOR IS THE RESPONSIBILITY OF THE CONTRACTOR.

WATER MAINS SHALL BE CLASS 53 (12" AND UNDER) OR CLASS 54 (OVER 12") DUCTILE IRON, MEETING AWWA C151 WITH PUSH JOINTS. THE MINIMUM COVER OVER WATER MAINS SHALL BE 4'-6" FROM GROUND SURFACE TO THE BARREL OF THE PIPE. THE OUTSIDE SURFACE OF ALL DUCTILE IRON PIPE, FITTINGS AND APPURTENANCES SHALL BE SHOP COATED WITH EITHER A COAL TAR OR ASPHALT BASE BITUMINOUS MATERIAL. IF THE COATING MATERIAL IS FOUND TO BE DAMAGED PRIOR TO THE PIPE TRENCH BEING BACKFILLED, THE CONTRACTOR SHALL PROVIDE AN ADDITIONAL APPROVED MATERIAL AS REQUIRED TO REPAIR THE DAMAGES. THE CONTRACTOR SHALL HAVE SUFFICIENT COATING MATERIALS AVAILABLE AT THE JOB SITE PRIOR TO LAYING THE PIPE. THE INTERIOR OF ALL PIPES AND FITTINGS SHALL BE LINED WITH DOUBLE CEMENT MORTAR AND SEAL COATED IN COMPLETE CONFORMANCE WITH AWWA C104, OR THE LATEST REVISION. FITTINGS SHALL BE RATED FOR 250 PSI WORKING PRESSURE IN ACCORDANCE WITH AWWA C110. PIPE LENGTHS MAY BE DEFLECTED AT THE JOINT IF REQUIRED, AT ONE-HALF THE DEGREE RECOMMENDED BY THE MANUFACTURER.

VALVES 33/32 THE ITEMS COVERED BY THIS SPECIFICATION SHALL MEET THE APPLICABLE AWWA C905 STANDARDS AND THE FOLLOWING: ALL VALVES SHALL BE NON-RISING STEM, IRON BODY, RESILENT WEDGE DISC. THE DESIGN OF THE THRUST COLLAR SHALL BE SUCH THAT THE THRUST COLLAR IS SEALED FROM LINE PRESSURE BY MEANS OF AN "O" RING SEAL. ALL VALVES SHALL BE FURNISHED WITH A TWO (2) INCH SQUARE OPENING NUT, OPEN RIGHT. ALL VALVES SHALL BE FURNISHED WITH MECHANICAL JOINT END CONNECTIONS. THE STEM SHALL BE PROTECTED FROM EXTERNAL GRIT BY A WEATHER SHIELD AND AN UPPER "O" RING. STEM SHALL BE LUBRICATED. GATE COATING SHALL HAVE A MINIMUM THICKNESS OF 10 MILS. VALVE SHALL BE TESTED AT THE RATED WORKING PRESSURE OF 250 PSI WITH NO LEAKAGE. SHELL TEST OF 500 PSI SHALL BE APPLIES TO BODY WITH VALVE IN THE OPEN POSITION WITH NO LEAKAGE THROUGH THE METAL, STEM SEALS OR JOINTS. VALVE MUST HAVE TRADITIONAL STUFFING BOX. ALL BOLTING MATERIAL IN THE THRUST COLLAR AND BONNET SHALL BE #316 SS BOLTS. ALL VALVES WITH ACCESSORIES PACK (FLANGES, RUBBERS, NUTS, BOLTS)

PLASTIC PIPE SHALL BE AWWA C909 PVCO PRESSURE PIPE, CL200.

WATER SERVICES WILL BE INSTALLED BY THE CANTON WATER DEPARTMENT AND PAID FOR BY THE OWNER/DEVELOPER.

ANY COMMERCIAL OR INDUSTRIAL WATER SERVICE MUST HAVE SITE AND PLUMBING PLANS SUBMITTED TO THE CANTON BUILDING DEPARTMENT FOR APPROVAL. THE CANTON BUILDING DEPARTMENT WILL DISTRIBUTE THE PLANS TO THE APPROPRIATE DEPARTMENT FOR REVIEW AND COMMENTS. CORRECTIONS MUST BE MADE AND RESUBMITTED. PRICE ESTIMATES WILL NOT BE ISSUES AND SERVICE TAPS WILL NOT BE MADE UNTIL THE PLANS HAVE BEEN APPROVED BY THE CANTON WATER DEPARTMENT.

DISINFECTION OF WATER MAINS SHALL BE IN ACCORDANCE WITH AWWA C651.

CANTON WATER DEPARTMENT GENERAL NOTES: (CONTINUED)

ALL WATER LINE PRESSURE TESTING SHALL CONFORM TO AWWA C600.

WATER MAINS SHALL BE INSTALLED AND BACKFILLED PER ODOT ITEM 638.

WATER LINES LOCATED WITHIN THE LIMITS OF OR WITHIN A 1/2 TO 1 SLOPE OF EXISTING AND/OR PROPOSED ROADWAYS, PARKING AREAS, BUILDINGS, SIDEWALKS, AND/OR DRIVES SHALL BE INSTALLED AS TYPE B CONDUITS. ALL OTHER WATER MAINS SHALL BE INSTALLED AS TYPE C CONDUITS. BEDDING SHALL BE AS SPECIFIED, EXCEPT THAT SLAG WILL NOT BE PERMITTED.

ALL BENDS, FITTINGS, TEES, VALVES, DEAD ENDS, ETC. SHALL BE SECURED EQUAL. POURED-IN-PLACE CONCRETE THRUST BLOCKS SHALL ALSO BE PROVIDED AT/FOR EACH BENDS, FITTING, TEE, DEAD END, ETC. THIS BLOCKING SHALL BE CAREFULLY PLACED TO ENSURE IT IS POSITIONED PROPERLY TO WITHSTAND THE RESULTANT FORCES AT EACH BEND, FITTING, ETC. AND SHALL BEAR ON STABLE UNDISTURBED GROUND CAPABLE OF WITHSTANDING THE POTENTIAL LOADING. TIE RODS ARE TO BE 3/4 INCH DIAMETER. TWO TIE RODS ARE REQUIRED FOR AN 8 INCH PIPE, AND FOUR TIE RODS ARE REQUIRED FOR 12 INCH PIPE.

IN ADDITION TO THE RESTRAINT OF ALL BENDS, FITTINGS, TEES, VALVES, DEAD ENDS, ETC. THE CONTRACTOR SHALL ALSO SECURE/RESTRAIN ALL JOINTS FOR AT LEAST THREE (3) PIPE JOINTS (50 LF MIN.) BEYOND EACH DEAD END, BEND, FITTING, VALVE, TEE, ETC. UTILIZING MEGALUGS, FIELD LOK GASKETS, OR APPROVED EQUALS.

THE CONTRACTOR SHALL PROVIDE 18" VERTICAL CLEARANCE BETWEEN PROPOSED WATERLINES AND ANY SANITARY SEWERS. WHEN 18" CLEARANCE BETWEEN A WATERLINE AND A SANITARY SEWER CANNOT BE OBTAINED, THE CONTRACTOR SHALL PROVIDE CONCRETE ENCASEMENT AS DIRECTED BY THE ENGINEER. THE CONTRACTOR SHALL PROVIDE 12" MINIMUM CLEARANCE BETWEEN WATERLINES AND STORM SEWERS. THE CONTRACTOR SHALL MAINTAIN TEN (10) FOOT HORIZONTAL CLEARANCE BETWEEN WATERLINES/SERVICES AND SANITARY SEWERS AND FOUR (4) FOOT HORIZONTAL CLEARANCE BETWEEN WATERLINES/SERVICES AND STORM SEWERS.

THE FIRE HYDRANT SETTING SHALL INCLUDE THE HYDRANT, ANCHOR TEE, VALVE, VALVE BOX, 6 INCH PIPING AND ALL FITTINGS NEEDED FOR PROPOR INSTALLATION TO FINAL GRADE. FIRE HYDRANTS SHALL BE MUELLER A423 MEETING THE CITY OF CANTON WATER DEPARTMENT STANDARDS AND REQUIREMENTS. ALL COSTS FOR THE 6" PIPING ASSOCIATED WITH THE INSTALLATION OF FIRE HYDRANTS SHALL BE INCLUDED WITH THE FIRE HYDRANT PAY ITEM. ALL HYDRANTS SHALL BE INSTALLED WITH THE PUMPER NOZZLE FACING THE STREET. ALL FIRE HYDRANT THREADS SHALL BE LUBRICATED WITH A FOOD GRADE LUBRICANT AND OPERATED UPON INSTALLATION.

ALL WATER TAPS AND SERVICES MUST BE INSTALLED BEFORE ANY PAVEMENT FOR THE PROPOSED ROADWAY HAS BEEN PLACED. CONTRACTOR IS NOT TO MAKE ANY SERVICE TAPP ON THE WATER MAIN. THE CANTON WATER DEPARTMENT WILL MAKE ALL SERVICE TAPS.

THE PROPOSED FACILITIES SHALL MAINTAIN A MINIMUM 35 PSI PRESSURE DELIVERED TO THE CURB STOP DURING NORMAL OPERATING CONDITIONS.

BOOSTER PUMPS ARE NOT PERMITTED ON SERVICE CONNECTIONS.

ALL DUCTILE IRON PIPE, INCLUDING FITTINGS AND APPURTENANCES BURIED UNDERGROUND, SHALL BE ENCASED WITH 8 MIL. POLYETHYLENE FILM CONFORMING TO AWWA C105.

CANTON WATER DEPARTMENT GENERAL NOTES: (CONTINUED)

THE CONTRACTOR SHALL TAKE ANY AND ALL NECESSARY PRECAUTIONS TO PROTECT AND MAINTAIN IN SERVICE, ANY EXISTING WATER MAINS EXPOSED DURING CONSTRUCTION.

ANY WATER SERVICE LINE THAT IS BROKEN, CUT OR OTHERWISE DAMAGED, SHALL BE REPLACED FROM THE CORPORATION STOP TO THE CURB STOP WITH A SINGLE PIECE OF PLASTIC SERVICE LINE (DRISCOPLEX). NO SPLICING OF THE SERVICE LINE WILL BE PERMITTED.

SERVICE BRANCHES WILL BE INSTALLED AS PER O.D.O.T ITEM 638.16, WITH THE FOLLOWING EXCEPTIONS: 1. WHEN A SERVICE BRANCH IS DISTURBED FOR LOWERING, RAISING, EXTENDING OR SHORTENING ON THE PROPERTY SIDE ON THE SERVICE STOP, IT SHALL BE REPLACED WITH NEW MATERIALS FROM THE CORPORATION STOP TO THE SERVICE STOP.

IN A STREET IMPROVEMENT, NO EXISTING WATER CURB BOX WILL BE LEFT IN THE PAVEMENT, CURB AND GUTTER OR SIDEWALK. THE CURB BOX WILL BE MOVED TO A SUITABLE LOCATION DETERMINED BY THE CANTON WATER DEPARTMENT. WHEN THE CURB BOX IS MOVED, ALL NEW MATERIAL WILL BE USED FROM THE CORPORATION STOP TO THE CURB STOP WHICH IS A SINGLE PIECE OF PLASTIC SERVICE LINE (DRISCOPLEX). NO SPLICING OF THE SERVICE LINE WILL BE PERMITTED. A NEW TAP (CORPORATION STOP) AND CURB STOP AND BOX MAY ALSO BE REQUIRED. THE DETERMINATION WILL BE MADE BY THE CANTON WATER DEPARTMENT.

ALL WATER MAINS WILL BE INSTALLED UNDER THE PAVEMENT WITH A MINIMUM OF 3 FEET FROM THE EDGE OF PAVEMENT OR THE CURB AND/OR GUTTER. IN EXISTING STREETS, A SAW CUT WILL BE MADE TO ENSURE A CLEAN EDGE.

WHEN AN EXISTING WATER MAIN MUST BE SHUT DOWN TO PERFORM REQUIRED WORK, THE PROPERTIES TO BE EFFECTED SHALL BE GIVEN A MINIMUM 24 HOUR NOTICE OF SAID SHUT DOWN. THE WORK WILL BE SCHEDULED AND COORDINATED TO MINIMIZE THE TIME THE MAIN IS OUT OF SERVICE.

THE CONTRACTOR SHALL NOTIFY THE CITY 48 HOURS IN ADVANCE OF ANY SHUT DOWN OF AN EXISTING MAIN. THE CONTRACTOR WILL NOT OPERATE ANY VALVES. VALVES WILL BE OPERATED BY CANTON WATER DEPARTMENT PERSONNEL ONLY. VALVES DAMAGED BY THE CONTRACTOR'S OPERATION WILL BE REPLACED AT THE CONTRACTOR'S EXPENSE.

ALL VALVE BOXES WILL BE ADJUSTED TO FINAL GRADE OF SURROUNDING PAVEMENT OR FINISHED SURFACE TREATMENTS WHEN THE PROJECT IS COMPLETED.

POLYETHYLENE WATER MAIN AND SERVICE TUBING 2" AND UNDER SHALL BE COPPER TUBE SIZE AND MEET STANDARDS ASTM-D2737 PE3408 AND AWWA C906. THE ONLY ACCEPTED TUBING IS CP CHEM PERFORMANCE PIPE DRISCOPLEX 5100-ULTRA-LINE.

ANY DIGGING WITHIN THE RIGHT OF WAY OF ANY STREET REQUIRES A ROAD OPENING PERMIT. PLEASE CONTACT THE APPROPRIATE GOVERNMENTAL ENTITY FOR INFORMATION REGARDING THE PERMITTING PROCESS AND/OR FEES DUE.

REGARDLESS OF SERVICE LINE SIZE, THE WATER SERVICE FROM THE CURB BOX TO THE FACILITY, MUST BE INSTALLED BY A CITY OF CANTON LICENSED PLUMBER. A CITY OF CANTON PLUMBING PERMIT MUST BE ISSUED TO THE PLUMBER INSTALLING THE SERVICE LINE BEFORE THE WATER SERVICE CAN BE INSTALLED.

PER CITY ORDINANCE "105.03 U.S. STEEL USAGE REQUIRED; EXCEPTIONS", ALL STEEL NECESSARY IN THE CONSTRUCTION OF ANY WORK SHALL BE STEEL THAT IS PRODUCED IN THE UNITED STATES UNLESS A SPECIFIC PRODUCT WHICH IS REQUIRED IS NOT PRODUCED BY MANUFACTURERS IN THE UNITED STATES IN WHICH EVENT THIS PROHIBITION DOES NOT APPLY.

CALCULATED JMK
CHECKED WLC

GENERAL NOTES

WALNUT & CHERRY
COMPLETE STREET
BIKE LANES

R:\Stark\SARTA\Task 3 Canton\STA\91592\roadway\sheets\91592GN007.dgn 6/29/2012 1:42:00 PM bill

SEQUENCE OF CONSTRUCTION ACTIVITIES:
THIS PROJECT SHALL BE CONSTRUCTED IN THREE (3) PHASES: PHASE 1A WORK ON WALNUT AVENUE AND PHASE 1B WORK ON CHERRY AVENUE SHOULD BE COMPLETED CONCURRENTLY.

PHASE 1A (WALNUT AVENUE):
DURING THIS PHASE ON WALNUT AVENUE, THE CONTRACTOR SHALL MAINTAIN TWO SOUTHBOUND LANES AT ALL TIMES WITHIN PROPOSED MARKED LANES ADJACENT TO THE EXISTING EASTERLY CURB AND SHALL CONSTRUCT PROPOSED ROADWAY ITEMS ON THE WEST SIDE OF THE ROADWAY. THE CONTRACTOR SHALL MAINTAIN AT LEAST ONE LANE AT ALL TIMES AT EACH ONE-WAY SIDE STREET. ALL EXISTING LANES SHALL BE MAINTAINED AT 9TH STREET N.E. AND EAST TUSCARAWAS STREET. THE CONTRACTOR SHALL PROVIDE ACCESS TO ALL PROPERTIES AT ALL TIMES ALONG THE WEST SIDE OF THE ROADWAY. PEDESTRIANS SHOULD BE PROVIDED WITH A SAFE, CONVENIENT TRAVEL PATH AND EVERY EFFORT SHOULD BE MADE TO SEPARATE PEDESTRIAN MOVEMENT FROM BOTH WORK SITE ACTIVITITY AND VEHICULAR TRAFFIC. A MINIMUM WALKWAY WIDTH OF 5 FEET SHALL BE PROVIDED.

ONCE ALL WORK ZONE MARKINGS AND SIGNS ARE APPLIED AND DRUMS HAVE BEEN INSTALLED TO PROTECT THE WORK AREA ON THE WEST SIDE, AND ACCEPTANCE BY THE ENGINEER, THE CONTRACTOR SHALL INITIATE CONSTRUCTION ACTIVITIES. WORK DURING THIS PHASE INCLUDES PAVEMENT PLANING AND RESURFACING, FULL DEPTH PAVEMENT, CURB, SIDEWALK, CURB RAMPS, TRAFFIC CONTROL AND LIGHTING ITEMS, STREETSCAPE ITEMS AND BACK-IN DIAGONAL ON-STREET PARKING SPACES, INSTALLATION OF SARTA BUS SHELTER/STOP FACILITIES, AND ALL OTHER ROADWAY WORK AS INDICATED IN THE CONSTRUCTION PLANS. THE FINAL COURSE OF ASPHALT SHALL BE APPLIED DURING PHASE 3.

UPON COMPLETION OF THE CONSTRUCTION IN THIS PHASE, AND ACCEPTANCE BY THE ENGINEER, THE CONTRACTOR SHALL PROCEED TO PHASE 2.

PHASE 1B (CHERRY AVENUE):
DURING THIS PHASE ON CHERRY AVENUE, THE CONTRACTOR SHALL MAINTAIN TWO NORTHBOUND LANES AT ALL TIMES WITHIN EXISTING MARKED LANES ADJACENT TO THE EXISTING WESTERLY CURB AND SHALL CONSTRUCT PROPOSED ROADWAY ITEMS ON THE EAST SIDE OF THE ROADWAY. THE CONTRACTOR SHALL MAINTAIN ALL LANES AT ALL TIMES AT EACH SIDE STREET. ALL EXISTING LANES SHALL BE MAINTAINED AT 9TH STREET N.E. AND EAST TUSCARAWAS STREET. THE CONTRACTOR SHALL PROVIDE ACCESS TO ALL PROPERTIES AT ALL TIMES ALONG THE EAST SIDE OF THE ROADWAY. PEDESTRIANS SHOULD BE PROVIDED WITH A SAFE, CONVENIENT TRAVEL PATH AND EVERY EFFORT SHOULD BE MADE TO SEPARATE PEDESTRIAN MOVEMENT FROM BOTH WORK SITE ACTIVITITY AND VEHICULAR TRAFFIC. A MINIMUM WALKWAY WIDTH OF 5 FEET SHALL BE PROVIDED.

ONCE ALL WORK ZONE MARKINGS AND SIGNS ARE APPLIED AND DRUMS HAVE BEEN INSTALLED TO PROTECT THE WORK AREA ON THE EAST SIDE, AND ACCEPTANCE BY THE ENGINEER, THE CONTRACTOR SHALL INITIATE CONSTRUCTION ACTIVITIES. WORK DURING THIS PHASE INCLUDES FULL DEPTH PAVEMENT, CURB, SIDEWALK, TRAFFIC CONTROL AND LIGHTING ITEMS, INSTALLATION OF BUS SHELTER/STOP FACILITIES AND ALL OTHER ROADWAY WORK AS INDICATED IN THE CONSTRUCTION PLANS.

UPON COMPLETION OF THE CONSTRUCTION IN THIS PHASE, AND ACCEPTANCE BY THE ENGINEER, THE CONTRACTOR SHALL PROCEED TO PHASE 2.

SEQUENCE OF CONSTRUCTION ACTIVITIES (CONTINUED):
PHASE 2 (WALNUT AVENUE):
DURING THIS PHASE ON WALNUT AVENUE, THE CONTRACTOR SHALL MAINTAIN TWO SOUTHBOUND LANES AT ALL TIMES ADJACENT WITHIN PROPOSED MARKED LANES ADJACENT TO THE WESTERLY CURB AND SHALL CONSTRUCT PROPOSED ROADWAY ITEMS ON THE EAST SIDE OF THE ROADWAY. THE CONTRACTOR SHALL MAINTAIN AT LEAST ONE LANE AT ALL TIMES AT EACH ONE-WAY SIDE STREET. ALL EXISTING LANES SHALL BE MAINTAINED AT 9TH STREET N.E. AND EAST TUSCARAWAS STREET. PEDESTRIANS SHOULD BE PROVIDED WITH A SAFE, CONVENIENT TRAVEL PATH AND EVERY EFFORT SHOULD BE MADE TO SEPARATE PEDESTRIAN MOVEMENT FROM BOTH WORK SITE ACTIVITITY AND VEHICULAR TRAFFIC. A MINIMUM WALKWAY WIDTH OF 5 FEET SHALL BE PROVIDED.

ONCE ALL WORK ZONE MARKINGS AND SIGNS ARE APPLIED AND DRUMS HAVE BEEN INSTALLED TO PROTECT THE WORK AREA ON THE EAST SIDE, AND ACCEPTANCE BY THE ENGINEER, THE CONTRACTOR SHALL INITIATE CONSTRUCTION ACTIVITIES. WORK DURING THIS PHASE INCLUDES PAVEMENT PLANING AND RESURFACING, FULL DEPTH PAVEMENT, CURB, SIDEWALK, CURB RAMPS, TRAFFIC CONTROL AND LIGHTING ITEMS, AND ALL OTHER ROADWAY WORK AS INDICATED IN THE CONSTRUCTION PLANS. THE FINAL COURSE OF ASPHALT SHALL BE APPLIED DURING PHASE 3.

UPON COMPLETION OF THE CONSTRUCTION IN THIS PHASE, AND ACCEPTANCE BY THE ENGINEER, THE CONTRACTOR SHALL PROCEED TO PHASE 3.

PHASE 3 (WALNUT AVENUE AND CHERRY AVENUE):
THIS FINAL PHASE SHALL BE RESERVED FOR THE FINAL ASPHALT COURSE AND FINAL PAVEMENT MARKINGS AND ANY REMAINING WORK OUTSIDE OF THE PROPOSED PAVEMENT LIMITS.

THE CONTRACTOR SHALL MAINTAIN TRAFFIC PER MT-97.12 TO COMPLETE ANDY REMAINING ROADWAY WORK DURING THIS PHASE.

UPON COMPLETION OF THE CONSTRUCTION OF THIS PHASE, AND ACCEPTANCE BY THE ENGINEER, THE CONTRACTOR SHAL REMOVE ANY REMAINING WORK ZONE TRAFFIC ITEMS PER ITEM 614 - MAINTAINING TRAFFIC.

MAINTENANCE OF TRAFFIC:
THIS ITEM SHALL CONSIST OF MAINTENANCE OF TRAFFIC ON EXISTING ROADWAYS AND RAMPS IN ACCORDANCE WITH THE OHIO MANUAL OF UNIFORM TRAFFIC CONTROL DEVICES FOR STREETS AND HIGHWAYS, CURRENT EDITION, LATEST REVISION, THE SPECIFICATIONS AND THE FOLLOWING:

1. A MINIMUM OF TWO 10-FOOT LANES IN EACH DIRECTION SHALL BE MAINTAINED ON THE EXISTING PAVEMENT, COMPLETED PAVEMENT, AND TEMPORARY PAVEMENT DURING CONSTRUCTION OF THE WORK.

2. PRIOR TO THE PRE-CONSTRUCTION MEETING, THE CONTRACTOR SHALL SUBMIT A PROPOSED PROJECT CONSTRUCTION SCHEDULE TO THE CITY OF CANTON FOR APPROVAL. THE CONTRACTOR SHALL INFORM THE CITY OF CANTON, SARTA, AND ODOT D-4 EIGHTEEN (18) DAYS PRIOR TO THE BEGINNING OF WORK.

3. CONES SHALL NOT BE ACCEPTABLE TRAFFIC CONTROL DEVICES FOR LANE RESTRICTIONS OR LANE REDUCTIONS THAT ARE IN OPERATION ONE-HALF HOUR AFTER SUNSET OR ONE HALF-HOUR BEFORE SUNRISE. ALL NIGHTTIME LANE RESTRICTIONS SHALL REQUIRE DRUMS OR BARRICADES AT A MAXIMUM SPACING OF FIFTY (50) FEET. WEIGHTED CHANNELIZERS MAY BE USED IN ACCORDANCE WITH THE STANDARD CONSTRUCTION DRAWINGS.

4. LANE RESTRICTIONS OR LANE REDUCTIONS SHALL NOT BE PERMITTED AFTER NORMAL WORKING HOURS. NORMAL WORKING HOURS SHALL BE THOSE HOURS DURING WHICH THE CONTRACTOR HAS A FULL COMPLEMENT OF EMPLOYEES AND EQUIPMENT ACTIVELY REMOVING AND/OR PLACING PAVEMENT MATERIALS.

5. THE CONTRACTOR SHALL FURNISH, ERECT, MAINTAIN AND SUBSEQUENTLY REMOVE ALL FLAGS, BARRICADES, SIGNS, SIGN SUPPORTS AND FURNISH AND MAINTAIN ALL FLAGGERS, WATCHERS AND INCIDENTALS RELATED THERETO.

6. ALL FULL DEPTH PAVEMENT REMOVAL AND REPLACEMENT OPERATIONS SHALL BE COMPLETED THE SAME DAY THE EXCAVATION IS MADE. IF THE CONTRACTOR CANNOT COMPLETE THE WORK, THE EXCAVATION SHALL BE BACKFILLED OR PROTECTED WITH DRUMS OR PORTABLE CONCRETE BARRIER.

7. UNDER NO CIRCUMSTANCES SHALL THE CONTRACTOR BE PERMITTED TO HAVE SUCCESSIVE WORK ZONES UNLESS THE DISTANCE BETWEEN THE DRUMS, BARRICADES OR CONES EXCEEDS TWO (2) MILES RURAL OR ONE [1] MILE URBAN.

8. ONLY DURING OFF-PEAK PERIODS (ie ANY PERIOD OTHER THAN 6-8AM AND 3-6PM) SHALL THE CONTRACTOR INSTALL AND SUBSEQUENTLY RESET ALL TRAFFIC CONTROL NECESSARY FOR THE WORK ZONE FOR EACH CONSTRUCTION PHASE.

9. IN ADDITION TO THE REQUIREMENTS OF 614.11 WORK ZONE PAVEMENT MARKINGS, AT THE END OF EACH DAY OF WORK, THE CONTRACTOR SHALL REPLACE (WITH WORK ZONE MARKINGS) ALL LANE, CENTER, STOP OR CHANNELIZING LINES THAT WERE REMOVED OR COVERED DURING THE PAVEMENT REMOVAL OR PLACEMENT OPERATIONS. QUANTITIES FOR SUCH PLACEMENT ARE CARRIED AS PART OF THE ITEMS LISTED UNDER 614 WORK ZONE PAVEMENT MARKINGS.

10. PRIOR TO OPENING TO TRAFFIC EACH LANE SHALL BE IN A SAFE, PASSABLE CONDITION. ALL TRANSVERSE JOINTS SHALL EXTEND ACROSS THE FULL LANE AND SHOULDER WIDTH AND EACH LANE SHALL BE FREE FROM UNEVEN LONGITUDINAL JOINTS. THE CONTRACTOR SHALL PROVIDE ASPHALT WEDGES FOR TRANSVERSE JOINTS WHEREVER THERE ARE PAVEMENT ELEVATION DIFFERENCES.

MAINTENANCE OF TRAFFIC (CONTINUED)
11. THE FOLLOWING ESTIMATED QUANTITIES HAVE BEEN INCLUDED IN THE GENERAL SUMMARY FOR USE AS DETERMINED BY THE ENGINEER FOR THE MAINTENANCE OF TRAFFIC DURING ALL PHASES OF CONSTRUCTION:

ITEM 614 - WORK ZONE LANE LINE, CLASS I, 642 PAINT	2.00 MILE
ITEM 614 - WORK ZONE EDGE LINE, CLASS I, 642 PAINT	2.00 MILE
ITEM 614 - WORK ZONE STOP LINE, CLASS I, 642 PAINT	500 FT
ITEM 614 - WORK ZONE CROSSWALK LINE, CLASS I, 642 PAINT	1000 FT
ITEM 614 - WORK ZONE ARROW, CLASS I, 642 PAINT	10 EACH

12. THE CONTRACTOR SHALL MAINTAIN ACCESS TO ALL PROPERTIES (RESIDENTIAL AND COMMERCIAL) WITHIN THE CONSTRUCTION LIMITS AT ALL TIMES DURING ALL PHASES OF CONSTRUCTION IN ACCORDANCE WITH ODOT CMS 614.03. THE CONTRACTOR SHALL FURNISH AND APPLY WATER FOR DUST CONTROL. THE FOLLOWING ESTIMATED QUANTITIES HAVE BEEN INCLUDED IN THE GENERAL SUMMARY FOR USE AS DIRECTED BY THE ENGINEER FOR THE MAINTENANCE OF DRIVEWAYS AND FOR DUST CONTROL PURPOSES:

ITEM 614 - ASPHALT CONCRETE FOR MAINTAINING TRAFFIC	25 CU YD
ITEM 410 - TRAFFIC COMPACTED SURFACE, TYPE A OR B	25 CU YD
ITEM 410 - TRAFFIC COMPACTED SURFACE, TYPE C	25 CU YD
ITEM 616 - WATER	1 M GAL

ALL WORK AND TRAFFIC CONTROL DEVICES SHALL BE IN ACCORDANCE WITH CMS 614 AND OTHER APPLICABLE PORTIONS OF THE SPECIFICATIONS, AS WELL AS THE OHIO MANUAL OF UNIFORM TRAFFIC CONTROL DEVICES. PAYMENT FOR ALL LABOR, EQUIPMENT AND MATERIALS SHALL BE INCLUDED IN THE LUMP SUM CONTRACT PRICE FOR ITEM 614 - MAINTAINING TRAFFIC, UNLESS SEPARATELY ITEMIZED IN THE PLAN.

PLACEMENT OF ASPHALT CONCRETE:
TWO-WAY TRAFFIC SHALL BE MAINTAINED AT ALL TIMES EXCEPT THAT ONE-WAY TRAFFIC WILL BE PERMITTED FOR MINIMUM PERIODS OF TIME CONSISTENT WITH THE REQUIREMENTS OF THE SPECIFICATIONS SFOR PROTECTION OF COMPLETED ASPHALT CONCRETE COURSES.

TRENCH FOR WIDENING (SPEED LIMIT<45MPH)
TRENCH EXCAVATION FOR BASE WIDENING SHALL BE ONLY ON ONE SIDE OF THE PAVEMENT AT A TIME. THE OPEN TRENCH MAY BE PROTECTED BY BARRELS PLACED AT TEN [10] FOOT INTERVALS FOR THE FIRST 72 HOURS THAT THE TRENCH IS OPEN. IF THE WIDENING IS NOT COMPLETED WITHIN THE 72 HOUR PERIOD, PLACEMENT OF PROPOSED BASE MATERIAL SHALL FOLLOW AS CLOSELY AS POSSIBLE BEHIND THE EXCAVATION OPERATIONS. THE LENGTH OF WIDENING TRENCH WHICH IS OPEN AT ANY ONE TIME SHALL BE HELD TO A MINIMUM AND SHALL AT ALL TIMES BE SUBJECT TO THE APPROVAL OF THE ENGINEER.

TRAFFIC CONTROL INSPECTOR
THE CONTRACTOR SHALL DESIGNATE AN INDIVIDUAL OTHER THAN THE SUPERINTENDENT AND SUBJECT TO THE APPROVAL OF THE ENGINEER, TO CONTINUOUSLY INSPECT ALL TRAFFIC CONTROL DEVICES WHENEVER CONSTRUCTION WORK IS BEING PERFORMED WITHIN THE WORK LIMITS OF THE PROJECT. THE DESIGNATED INDIVIDUAL SHALL ALSO INSPECT ALL TRAFFIC DEVICES AT THE BEGINNING AND AT THE END OF EACH WORK DAY. THE DESIGNATED INDIVIDUAL OR A QUALIFIED REPRESENTATIVE SHALL ALSO BE AVAILABLE ON AN AROUND THE CLOCK BASIS TO REPAIR AND/OR REPLACE DAMAGED OR MISSING TRAFFIC CONTROL DEVICES. THESE INDIVIDUALS SHALL BE EQUIPPED WITH CELLULAR PHONES AND THEIR NAMES AND PHONE NUMBERS SHALL BE GIVEN TO THE PROJECT ENGINEER AT THE PRE-CONSTRUCTION MEETING. THE DESIGNATED INDIVIDUAL SHALL HAVE NO OTHER CONSTRUCTION RELATED DUTIES. PAYMENT FOR THE SERVICES OF THE TRAFFIC CONTROL INSPECTOR SHALL BE INCLUDED IN THE LUMP SUM PRICE BID FOR ITEM 614 - MAINTAINING TRAFFIC.

CALCULATED JMK
CHECKED WLC

MAINTENANCE OF TRAFFIC GENERAL NOTES

WALNUT & CHERRY COMPLETE STREET BIKE LANES

R:\Stark\SARTA\Task 3 Canton\STA\91592\mat\sheets\91592MN001.dgn 6/29/2012 2:16:57 PM bill

MAINTENANCE OF TRAFFIC SIGNAL/FLASHER INSTALLATION:
THE CONTRACTOR SHALL BE RESPONSBLE FOR MAINTAINING TRAFFIC SIGNAL/FLASHER INSTALLATIONS WITHIN THE PROJECT UNDER THE FOLLOWING CONDITIONS:

1. EXISTING SIGNAL/FLASHER INSTALLATIONS WHICH THE PLANS REQUIRE THE CONTRACTOR TO ADJUST, MODIFY, ADD ONTO OR REMOVE, OR WHICH THE CONTRACTOR ACTUALLY ADJUSTS, MODIFIES OR OTHERWISE DISTURBS. THE CON- TRACTOR SHALL BE RESPONSIBLE FOR THE ENTIRE IN- STALLATION (AT AN INTERSECTION) FROM THE TIME HIS OPERATIONS FIRST DISTURB THE INSTALLATION UNTIL THE INSTALLATION HAS BEEN SUBSEQUENTLY REMOVED OR MODIFIED AND THE WORK ACCEPTED.

2. NEW OR REUSED SIGNAL/FLASHER INSTALLATIONS OR DEVICES, INSTALLED BY THE CONTRACTOR. THE CONTRACTOR SHALL BE RESPONSBILE FOR MAINTENANCE OF THESE FROM THE TIME OF INSTALLATION UNTIL THE WORK IS ACCEPTED.

THE CONTRACTOR SHALL CORRECT AS QUICKLY AS POSSIBLE ALL OUTAGES OR MALFUNCTIONS. HE SHALL PROVIDE THE MAINTAINING AGENCY AND THE ENGINEER SUCH ADDRESSES AND PHONE NUMBERS WHERE HIS MAINTENANCE FORCES CAN BE CONTACTED. THE CONTRACTOR SHALL PROVIDE ONE OR MORE PERSONS TO RECEIVE ALL CALLS AND DISPATCH THE NECESSARY MAINTENANCE FORCES TO CORRECT OUTAGES. SUCH A PERSON OR PERSONS MAY BE USED TO PERFORM OTHER DUTIES AS LONG AS PROMPT ATTENTION IS GIVEN TO THESE CALLS AND A PERSON IS READILY AVAILABLE CONTINUOUSLY 24 HOURS A DAY, 7 DAYS A WEEK. ALL LAMP OUTAGES, CABLE OUTAGES, ELECTRICAL FAILURES, EQUIPMENT MALFUNCTIONS AND MIS-ALIGNED SIGNAL HEADS SHALL BE CORRECTED TO THE SATIS- FACTION OF THE ENGINEER WITH THE SIGNAL BACK TO SERVICE WITHIN FOUR HOURS AFTER THE CONTRACTOR HAS BEEN NOTIFIED OF THE OUTAGE.

IN THE EVENT NEW SIGNALS ARE DAMAGED PRIOR TO ACCEPTANCE, ALL DAMAGED EQUIPMENT EXCEPT POLES AND CONTROL EQUIPMENT SHALL BE REPLACED BY THE CONTRACTOR TO THE SATISFACTION OF THE ENGINEER WITH THE SIGNAL BACK IN SERVICE WITHIN 8 HOURS AFTER THE CONTRACTOR'S NOTIFICATION OF THE OUTAGE. THE CONTRACTOR SHALL ARRANGE FOR FULL TRAFFIC CONTROL UNTIL THE SIGNAL IS BACK IN OPERATION.

IF POLES AND/OR CONTROL EQUIPMENT ARE DAMAGED AND MUST BE REPLACED, THE CONTRACTOR SHALL MAKE TEMPORARY REPAIRS AS NECESSARY TO BRING THE SIGNAL BACK INTO FULL OPERATION WITHIN THE ALLOWED 8-HOUR PERIOD, AND SHALL MAKE PERMANENT REPAIRS OR REPLACEMENT AS SOON THEREAFTER AS POSSIBLE.

NONE OF THE ABOVE SHALL BE CONSTRUED AS COLLECTIVE OR CONSECUTIVE OUTAGE TIME PERIODS AT ANY ONE LOCATION. THAT IS, WHERE MORE THAN ONE OUTAGE OCCURS AT ANY ONE LOCATION THEN THE ALLOTTED TIME LIMIT SHALL BE FOR THE WORST SINGLE OUTAGE.

WHERE OUTAGES ARE THE DIRECT RESULT OF A VEHICLE ACCIDENT, THE RESPONSE OF THE CONTRACTOR SHALL BE AS OUTLINED ABOVE. THE CONTRACTOR SHALL BE RESPONSIBLE FOR COLLECTION OF ANY COMPENSATION FOR THIS WORK FROM THOSE PARTIES RESPONSIBLE FOR THE DAMAGE.

WHERE THE CONTRACTOR HAS FAILED TO, OR CANNOT RESPOND TO, AN OUTAGE OR SIGNAL EQUIPMENT MALFUNCTION, AT THESE LOCATIONS WITHIN HIS RESPONSIBILITY, WITHIN PERIODS AS SPECIFIED ABOVE, THE ENGINEER MAY INVOKE THE PROVI- SIONS OF SECTION 105.15 AND ANY SUBSEQUENT BILLINGS TO THE STATE OR THE CITY OF CANTON FOR POLICE SERVICES AND MAINTENANCE SERVICES BY CITY FORCES SHALL BE DEDUCTED FROM MONIES DUE OR TO BECOME DUE THE CON- TRACTOR IN ACCORDANCE WITH PROVISIONS OF SECTION 105.15.

THE CONTRACTOR SHALL PROVIDE THE MAINTENANCE SERVICE ENTIRELY WITH HIS FORCES OR HE MAY CHOOSE TO ENTER INTO A COOPERATIVE UNDERSTANDING WITH THE LOCAL MAINTAINING AGENCY TO PROVIDE THE MAINTENANCE. THE CONTRACTOR SHALL INFORM THE ENGINEER, IN WRITING, OF THE MAINTENANCE METHOD SELECTED.

MAINTENANCE OF TRAFFIC SIGNAL/FLASHER INSTALLATION (CONTINUED):
THE CONTRACTOR SHALL BE RESPONSIBLE FOR ANY DAMAGE TO ANY TRAFFIC SIGNAL COMPONENTS REQUIRED TO BE HANDLED DURING THE RELOCATION OF POLES AND REVISIONS TO THE SIGNAL SYSTEM.

WHEN A TRAFFIC SIGNAL MUST BE TAKEN OUT OF SERVICE BY THE CONTRACTOR, DUE TO CONSTRUCTION PROCEDURES, THIS OUTAGE SHALL NOT EXCEED 4 HOURS AND SHALL NOT INCLUDE THE HOURS OF 6 A.M. TO 8 A.M. AND 4 P.M. TO 6 P.M. ANY SIGNALIZED INTERSECTION, WHERE THE SIGNAL IS OUT OF SERVICE DUE TO CONSTRUCTION PROCEDURES, OR DUE TO AN OUTAGE OR MALFUNCTION OF EQUIPMENT AS DESCRIBED ABOVE, SHALL BE PROTECTED, BY THE CONTRACTOR, BY THE INSTALLATION OF TEMPORARY "STOP" SIGNS

ANY VEHICULAR TRAFFIC SIGNAL HEAD, EITHER NEW OR EXISTING WHICH WILL BE OUT OF OPERATION SHALL BE COVERED IN THE MANNER DESCRIBED IN 632.25.

THE CONTRACTOR SHALL MAINTAIN COMPLETE RECORDS OF MALFUNCTIONS INCLUDING:

1. TIME OF NOTIFICATION OF MALFUNCTION; 2. TIME OF WORK CREWS ARRIVAL TO CORRECT THE MALFUNCTION; 3. ACTIONS TAKEN TO CORRECT THE MALFUNCTION, INCLUDING A LIST OF PARTS REPAIRED OR REPLACED; 4. A DIAGNOSIS OF REASON FOR THE MALFUNCTION AND PROBABILITY OF REOCCURRENCE; 5. TIME OF COMPLETION OF THE REPAIR AND SYSTEM RESTORED TO FULL SERVICE.

A COPY OF THESE RECORDS SHALL BE PROVIDED TO THE ENGINEER WITHIN THREE (3) WORKING DAYS FOLLOWING COMPLETION OF EACH REPAIR.

ALL COSTS RESULTING FROM THE ABOVE REQUIREMENTS SHALL BE CONSIDERED TO BE INCLUDED IN THE LUMP SUM PRICE BID FOR ITEM 614 - MAINTAINING TRAFFIC.

ITEM 614 - BUSINESS ENTRANCE (M4-H15) SIGN, AS PER PLAN
THE BUSINESS ENTRANCE (M4-H15) SIGN SHOULD BE PROVIDED AT EACH TEMPORARILY RELOCATED COMMERCIAL DRIVEWAY FOR WHICH THE RELOCATION IS NOT OBVIOUS TO THE MOTORIST. THE PROJECT ENGINEER SHALL DETERMINE WHETHER OR NOT THE DRIVEWAY RELOCATION IS, OR IS NOT, OBVIOUS AND WHETHER OR NOT A SIGN SHOULD BE PROVIDED. ONLY ONE SIGN PER BUSINESS SHALL BE PERMITTED. THE SIGN SHALL BE 36 INCH X 48 INCH IN SIZE WITH TYPE G OR TYPE H ORANGE RETROREFLECTIVE SHEETING. THE SIGN LEGEND SHALL BE PLACED ON BOTH SIDES OF THE SIGN (BACK TO BACK). THE SIGN SHALL HAVE THE STANDARD M4-H15 LEGEND WITH THE WORD "BUSINESS" ON THE TOP LINE, EXCEPT UNDER UNUSUAL CIRCUMSTANCES WHERE IT MAY NOT BE INTUITIVE THAT A DRIVEWAY SERVES A SPECIFIC BUSINESS. IN SUCH UNUSUAL CASES, THE ACTUAL BUSINESS NAME MAY BE SUBSTITUTED FOR THE WORD "BUSINESS".

THE SIGN SHALL BE MOUNTED ON TWO NO. 3 POSTS OR ON TEMPORARY POSTS IN ACCORDANCE WITH SCD MT-105.10 AND IN ACCORDANCE WITH THE OHIO MANUAL OF UNIFORM TRAFFIC CONTROL DEVICES, LATEST EDITION. THE SIGN SHALL BE CLEARLY VISIBLE AND SHALL CLEARLY IDENTIFY THE LO- CATION OF THE DRIVEWAY. THE SIGN SHOULD BE POSITIONED AT 90 DEGREES TO THE DIRECTION(S) OF TRAFFIC. THE SIGN MAY NEED TO BE MOVED FOR EACH PHASE OF THE MAIN- TENANCE OF TRAFFIC OPERATIONS.

PAYMENT FOR ALL COSTS ASSOCIATED WITH MANUFACTURING, MOUNTING, RELOCATING, AND REMOVING THE SIGN, INCLUDING ALL LABOR, MATERIALS AND EQUIPMENT SHALL BE INCLUDED IN THE CONTRACT PRICE PER EACH FOR ITEM 614 - BUSINESS ENTRANCE SIGN, AS PER PLAN.

THE FOLLOWING ESTIMATED QUANTITY HAS BEEN CARRIED TO THE GENERAL SUMMARY FOR THIS ITEM.

ITEM 614 - BUSINESS ENTRANCE SIGN, AS PER PLAN 15 EACH

WINTER SHUT-DOWN
DUE TO WEATHER LIMITATIONS IT MAY BE NECESSARY FOR THE PROJECT TO SHUT-DOWN FOR THE WINTER SEASON. REMAINING PORTIONS OF WORK WOULD THEN BE COMPLETED DURING THE FOLLOWING SPRING WHEN WEATHER CONDITIONS ARE WITHIN THE SPECIFIED RANGE. CONTINGENCY QUANTITIES HAVE BEEN INCLUDED IN THE PLANS IN THE EVENT THAT A SHUT-DOWN WOULD OCCUR. THE EXISTENCE OF THESE CONTINGENCY ITEMS DOES NOT RESTRICT THE CONTRACTOR IN COMPLETING THE PROJECT WITHIN THE 2012 CONSTRUCTION SEASON, NOR IS IT A GUARANTEE THAT THESE QUANTITIES WILL BE USED IF THE PROJECT IS COMPLETED WITHOUT A SHUT-DOWN. THESE QUANTITIES SHALL BE USED AT THE ENGINEER'S DISCRETION AND MAY BE UTILIZED IN PART, IN WHOLE, OR MAY BE ENTIRELY NON- PERFORMED. THE CONTRACTOR SHALL SUPPLY THE ENGINEER WITH A CPM SCHEDULE (PER SCHEDULE NOTE) DEPICTING THEIR ANTICIPATED WORK PLAN CLEARLY INDICATING A SHUT-DOWN PERIOD IF ONE EXISTS. ADDITIONALLY, THE CONTRACTOR SHALL INDICATE THEIR INTENT TO UTILIZE CONTINGENCY QUANTITIES IF THEIR SCHEDULE INDICATES A WINTER SHUT DOWN.

THE TIME FOR THE PROJECT SHALL BE CALCULATED AS (NTP + 85 WORK DAYS) IF A WINTER SHUT-DOWN IS NOT NECESSARY BASED ON THE CONTRACTOR'S WORK PLAN. IF A WINTER SHUT-DOWN IS NECESSARY THE TIME FOR THE CONTRACT SHALL BE CALCULATED AS (NTP + 85 WORK DAYS + WINTER SHUT-DOWN). THE FIRST DAY OF A WINTER SHUT-DOWN SHALL BE AT A TIME WHEN WEATHER CONDITIONS MAKE IT UNREASONABLE TO CONTINUE OPERATIONS OR WHERE SPECIFICATIONS PROHIBIT THE INSTALLATION OF MATERIALS ON THE PROJECT DUE TO WEATHER OR TEMPERATURE CONDITIONS. THE SHUT-DOWN SHALL CEASE WITH THE CONTINUATION OF OPERATIONS BY THE CONTRACTOR.

IF A SHUT-DOWN IS REALIZED, THE CONTRACTOR SHALL BE RESPONSIBLE FOR THE INSTALLATION OF TEMPORARY MEASURES TO ENSURE THE PROJECT IS SAFE AND PASSABLE THROUGH THE SHUT-DOWN PERIOD. ADDITIONALLY, THE CONTRACTOR SHALL BE RESPONSIBLE FOR THE MAINTENANCE OF TEMPORARY MEASURES AS WELL AS PERIODIC "AS- DIRECTED" MAINTENANCE AS DEEMED NECESSARY TO KEEP THE PROJECT IN A SAFE AND PASSABLE CONDITION. PRIOR TO THE SHUT-DOWN, ALL TEMPORARY MEASURES SHALL BE INSPECTED BY THE ENGINEER AND ACCEPTED. MAINTENANCE SHALL BE AT THE DIRECTION OF THE ENGINEER THROUGH THE SHUT-DOWN PERIOD. ALL COSTS ASSOCIATED WITH THE TEMPORARY MEASURES AS WELL AS ANY "AS-DIRECTED" MAINTENANCE SHALL BE INCLUDED AS INCIDENTAL ITEMS TO THE MOT REFERENCE ITEM.

WINTER SHUTDOWN CONTINGENCY QUANTITIES
THE CONTINGENCY ITEMS ADDRESSED IN THIS NOTE ARE SPECIFIC TO WINTER SHUT DOWN. SHOULD A WINTER SHUT DOWN BE WARRANTED, THESE QUANTITIES WILL BE UTILIZED WITH THE APPROVAL OF THE ENGINEER OR HIS APPOINTED REPRESENTATIVE. THE FOLLOWING CONTINGENCY QUANTITIES HAVE BEEN CARRIED TO THE GENERAL SUMMARY:

ITEM 614 - MAINTAINING TRAFFIC, MISC: REMOVAL OF EXISTING LANE ARROW	2 EACH
ITEM 614 - MAINTAINING TRAFFIC, MISC: REMOVAL OF EXISTING LANE LINE AND CHANNELIZING LINE	9740 FT
ITEM 614 - MAINTAINING TRAFFIC, MISC: REMOVAL OF EXISTING PARKING LOT STALL MARKING	700 FT
ITEM 614 - WORK ZONE LANE LINE, CLASS 1, 642 PAINT	1.85 MILE
ITEM 614 - WORK ZONE EDGE LINE, CLASS 1, 642 PAINT	1.85 MILE

REMOVAL OF EXISTING PAVEMENT MARKINGS ARE TO BE PERFORMED FOLLOWING ODOT SPECIFICATION 614.11 G, WITH THE ADDITION OF BLACKOUT PAINT SHALL BE ALLOWABLE.

ITEM 614 - LAW ENFORCEMENT OFFICER WITH PATROL CAR FOR ASSISTANCE
USE OF LAW ENFORCEMENT OFFICERS (LEOS) BY CONTRACTORS OTHER THAN THE USES SPECIFIED BELOW WILL NOT BE PERMITTED AT PROJECT COST. LEOS SHOULD NOT BE USED WHERE THE OMUTCD INTENDS THAT FLAGGERS BE USED.

IN ADDITION TO THE REQUIREMENTS OF CMS 614 AND THE OMUTCD, A UNIFORMED LEO WITH AN OFFICIAL PATROL CAR (CAR WITH TOP-MOUNTED EMERGENCY FLASHING LIGHTS AND COMPLETE MARKINGS OF THE APPROPRIATE LAW ENFORCEMENT AGENCY) SHALL BE PROVIDED FOR THE FOLLOWING TRAFFIC CONTROL TASKS:

DURING THE ENTIRE ADVANCE PREPARATION AND CLOSURE SEQUENCE WHERE COMPLETE BLOCKAGE OF TRAFFIC IS REQUIRED.

DURING A TRAFFIC SIGNAL INSTALLATION WHEN IMPACTING THE NORMAL FUNCTION OF THE SIGNAL OR THE FLOW OF TRAFFIC OR WHEN TRAFFIC NEEDS TO BE DIRECTED THROUGH AN ENERGIZED TRAFFIC SIGNAL CONTRARY TO THE SIGNAL DISPLAY (E.G., DIRECTING MOTORISTS THROUGH A RED LIGHT).

FOR LANE CLOSURES: DURING INITIAL SET-UP PERIODS, TEAR DOWN PERIODS, SUBSTANTIAL SHIFTS OF A CLOSURE POINT OR WHEN NEW LANE CLOSURE ARRANGEMENTS ARE INITIATED FOR LONG-TERM LANE CLOSURES/SHIFTS (FOR THE FIRST AND LAST DAY OF MAJOR CHANGES IN TRAFFIC CONTROL SETUP). IN GENERAL, LEOS SHOULD BE POSITION- ED AT THE POINT OF LANE RESTRICTION OR ROAD CLOSURE AND TO MANUALLY CONTROL TRAFFIC MOVEMENTS THROUGH INTERSECTIONS IN WORK ZONES.

WHEN CONSTRUCTION VEHICLES ARE ENTERING/EXITING THE ZONE DIRECTLY FROM/INTO AN OPEN LANE OF TRAFFIC. IF A LANE HAS BEEN CLOSED TO PROVIDE AN ACCELERATION/ DECELERATION LANE FOR THE VEHICLE, THE LEO WILL NOT BE REQUIRED.

LEOS SHOULD NOT FORGO THEIR TRAFFIC CONTROL RESPONSIBILITIES TO APPREHEND MOTORISTS FOR ROUTINE TRAFFIC VIOLATIONS. HOWEVER, IF A MOTORIST'S ACTIONS ARE CONSIDERED TO BE RECKLESS, THEN PURSUIT OF THE MOTORIST IS APPROPRIATE.

THE LEOS WORK AT THE DIRECTION OF THE ENGINEER. THE CONTRACTOR IS RESPONSIBLE FOR SECURING THE SERVICES OF THE LEOS WITH THE APPROPRIATE AGENCIES AND COMMUNICATING THE INTENTIONS OF THE PLANS WITH RESPECT TO DUTIES OF THE LEOS. THE ENGINEER SHALL HAVE FINAL CONTROL OVER THE LEOS' DUTIES AND PLACEMENT , AND WILL RESOLVE ANY ISSUES THAT MAY ARISE BETWEEN THE TWO PARTIES.

THE LEO SHALL REPORT IN TO THE CONTRACTOR PRIOR TO THE START OF THE SHIFT, IN ORDER TO RECEIVE INSTRUCTIONS REGARDING SPECIFIC WORK ASSIGNMENTS DURING HIS/HER SHIFT. THE LEO IS EXPECTED TO STAY AT THE PROJECT SITE FOR THE ENTIRE DURATION OF HIS/HER SHIFT. THE LEO SHALL REPORT TO THE CONTRACTOR AT THE END OF HIS/HER SHIFT. ONCE THE LEO HAS COMPLETED THE DUTIES DESCRIBED ABOVE AND STILL HAS TIME REMAINING ON HIS/HER SHIFT, THE LEO MAY BE ASKED TO PATROL THROUGH THE WORK ZONE (WITH FLASHING LIGHTS OFF) OR BE PLACED AT A LOCATION TO DETER MOTORISTS FROM SPEEDING. SHOULD IT BE NECESSARY TO LEAVE THE PROJECT SITE, THE LEO SHALL NOTIFY THE ENGINEER. THE CONTRACTOR SHALL PROVIDE THE LEO WITH A TWO-WAY COMMUNICATION DEVICE WHICH SHALL BE RETURNED TO THE CONTRACTOR AT THE END OF HIS/HER SHIFT.

LEOS (WITH PATROL CAR) REQUIRED BY THE TRAFFIC MAINTENANCE TASKS ABOVE SHALL BE PAID FOR ON A UNIT PRICE (HOURLY) BASIS UNDER ITEM 614 - LAW ENFORCEMENT OFFICER (WITH PATROL CAR) FOR ASSISTANCE. THE HOURS PAID SHALL INCLUDE ANY MINIMUM SHOW-UP TIME REQUIRED BY THE LAW ENFORCEMENT AGENCY INVOLVED. ANY ADDITIONAL COSTS (ADMINISTRATIVE OR OTHERWISE) INCURRED BY THE CONTRACTOR TO OBTAIN THE SERVICES OF AN LEO ARE ALSO INCLUDED. THE FOLLOWING ESTIMATED QUANTITIES HAVE BEEN CARRIED TO THE GENERAL SUMMARY:

ITEM 614 - LAW ENFORCEMENT OFFICER WITH PATROL CAR FOR ASSISTANCE	100 HOURS

CALCULATED JMK CHECKED WLC

MAINTENANCE OF TRAFFIC GENERAL NOTES

WALNUT & CHERRY COMPLETE STREET BIKE LANES

R:\Stark\SART\Task 3 Canton\STA\91592\mol\sheets\91592MN002.dgn 6/29/2012 2:16:35 PM bill

SHEET NUMBER														ITEM	ITEM EXT.	GRAND TOTAL	UNIT	DESCRIPTION	SEE SHEET NO.
OFFICE CALCS	6	7	8	9	17	18	19	20	21	22	23	117							
																		ROADWAY	
	LUMP													201	11000	LUMP		CLEARING AND GRUBBING	
					2149	109	942							202	23000	3200	SQ YD	PAVEMENT REMOVED	
3204														202	23001	3204	SQ YD	PAVEMENT REMOVED, AS PER PLAN	6
					9071	8584	3655	3607						202	30000	24917	SQ FT	WALK REMOVED	
					3									202	30600	3	SQ YD	CONCRETE MEDIAN REMOVED	
					1476	954	551	270						202	32000	3251	FT	CURB REMOVED	
					14	109	90							202	35100	213	FT	PIPE REMOVED, 24" AND UNDER	
					6									202	38800	6	EACH	GUARD POST REMOVED	
					1		2							202	58000	3	EACH	MANHOLE REMOVED	
					4	6	3							202	58300	13	EACH	CATCH BASIN OR INLET REMOVED	
					9									SPECIAL	20270000	9	FT	FILL AND PLUG EXISTING CONDUIT	6
												1		202	98100	1	EACH	REMOVAL MISC.: LUMINAIRE AND BRACKET ARM	6
					11	24	16							202	98100	51	EACH	REMOVAL MISC.: PARKING METER	6
												1		202	98100	1	EACH	REMOVAL MISC.: UTILITY POLE WITH LUMINAIRE AND BRACKET	6
			1200											203	10000	1200	CU YD	EXCAVATION	
			50											203	20000	50	CU YD	EMBANKMENT	
1694														204	10000	1694	SQ YD	SUBGRADE COMPACTION	
2														204	45000	2	HOUR	PROOF ROLLING	
	10													604	38501	10	EACH	MONUMENT ASSEMBLY, AS PER PLAN	6
									40086					608	12001	40086	SQ FT	5" CONCRETE WALK, AS PER PLAN	6
									210					608	52010	210	SQ FT	CURB RAMP, TYPE A1	
									42					608	52110	42	EACH	CURB RAMP, TYPE A1	
									2					608	52160	2	EACH	CURB RAMP, TYPE C2	
	35													SPECIAL	69065016	35	TON	SPECIAL - WORK INVOLVING PETROLEUM CONTAMINATED SOIL	6
										3				SPECIAL	69098000	3	EACH	SPECIAL MISC.: PARKING METER, SINGLE	7
										23				SPECIAL	69098000	23	EACH	SPECIAL MISC.: PARKING METER, DOUBLE	7
										18				SPECIAL	69098000	18	EACH	SPECIAL MISC.: TREE GRATE	7
									3					SPECIAL	69098000	3	EACH	SPECIAL MISC.: TYPICAL MAJOR BRT STOP WITH BUS SHELTER	7
									7					SPECIAL	69098000	7	EACH	SPECIAL MISC.: TYPICAL MINOR BRT STOP WITHOUT BUS SHELTER	7
										1360				SPECIAL	69098200	1360	SQ FT	SPECIAL MISC.: 2-1/4" BRICK WALKWAY PAVERS	7
										1360				SPECIAL	69098200	1360	SQ FT	SPECIAL MISC.: BRICK BOX FORM	7
		LUMP												SPECIAL	69098400	LUMP		SPECIAL MISC.: PRE-CONSTRUCTION VIDEO TAPING	7
			LUMP											SPECIAL	69098400	LUMP		SPECIAL MISC.: VIDEO RECORDING DATA COLLECTION SYSTEM	8
																		EROSION CONTROL	
			2											659	00100	2	EACH	SOIL ANALYSIS TEST	
			23											659	00300	23	CU YD	TOPSOIL	
			200											659	10000	200	SQ YD	SEEDING AND MULCHING	
			0.03											659	20000	0.03	TON	COMMERCIAL FERTILIZER	
			0.04											659	31000	0.04	ACRE	LIME	
			2											659	35000	2	M GAL	WATER	
LUMP														832	15000	LUMP		STORM WATER POLLUTION PREVENTION PLAN	
3000														832	30000	3000	EACH	EROSION CONTROL	
																		DRAINAGE	
				50										603	00100	50	FT	4" CONDUIT, TYPE B	
				50										603	00200	50	FT	4" CONDUIT, TYPE C	
				50										603	00900	50	FT	4" CONDUIT, TYPE B	
				50										603	01100	50	FT	4" CONDUIT, TYPE C	
											10			603	04600	10	FT	12" CONDUIT, TYPE C	
											161			603	05900	161	FT	15" CONDUIT, TYPE B	
											45			603	06100	45	FT	15" CONDUIT, TYPE C	
											47			603	07600	47	FT	18" CONDUIT, TYPE C	
											20			604	00800	20	EACH	CATCH BASIN, NO. 3A	
											7			604	09001	7	EACH	CATCH BASIN ADJUSTED TO GRADE, AS PER PLAN	8
				20										604	09901	20	EACH	CATCH BASIN GRATE, AS PER PLAN	9
											2			604	31500	2	EACH	MANHOLE, NO. 3	
											13			604	34500	13	EACH	MANHOLE ADJUSTED TO GRADE	
				1000										SPECIAL	60450000	1000	POUND	SPECIAL - MISCELLANEOUS METAL	9

CALCULATED JMK
CHECKED WLC

GENERAL SUMMARY

WALNUT & CHERRY
COMPLETE STREET
BIKE LANES

R:\Stark\SARTA\Task 3 Canton\STA\91592\roadway\sheets\91592GG001.dgn 8/28/2012 2:42:11 PM bill

SHEET NUMBER														ITEM	ITEM EXT.	GRAND TOTAL	UNIT	DESCRIPTION	SEE SHEET NO.
OFFICE CALCS	10	22		51	100	117	118	119	119A										
																		PAVEMENT	
	400													251	01000	400	SQ YD	PARTIAL DEPTH PAVEMENT REPAIR	
4227														252	01500	4227	FT	FULL DEPTH PAVEMENT SAWING	
20364														254	01000	20364	SQ YD	PAVEMENT PLANING, ASPHALT CONCRETE	
128														304	20001	128	CU YD	AGGREGATE BASE, AS PER PLAN	9
1007														305	10000	1007	SQ YD	6" CONCRETE BASE	
895														407	14000	895	GALLON	TACK COAT FOR INTERMEDIATE COURSE	
445														424	10000	445	CU YD	FINE GRADED POLYMER ASPHALT CONCRETE, TYPE A	
49														448	46050	49	CU YD	ASPHALT CONCRETE INTERMEDIATE COURSE, TYPE 2, PG64-22	
771														452	12000	771	SQ YD	8" NON-REINFORCED CONCRETE PAVEMENT	
		3802												609	26000	3802	FT	CURB, TYPE 6	
																		LIGHTING	
						10	8	11	7					625	00500	36	EACH	CONNECTOR KIT, TYPE II	
						30	24	33	21					625	00600	108	EACH	CONNECTOR KIT, TYPE III	
						10	8	11	7					625	10481	36	EACH	LIGHT POLE, DECORATIVE, AS PER PLAN	115
						10	8	11	7					625	14501	36	EACH	LIGHT POLE FOUNDATION, AS PER PLAN	115
						3954	3417	2670	1083					625	23302	11124	FT	NO. 6 AWG 5000 VOLT DISTRIBUTION CABLE	
					112	2906	2042	1962	1562					625	25400	8584	FT	CONDUIT, 2", 725.04	
						20	16	22	14					625	27401	72	EACH	LUMINAIRE, TWIN POST TOP, AS PER PLAN	116
					112	1135	674	731	675					625	29500	3327	FT	TRENCH IN PAVED AREA, TYPE A	
						318	347	250	106					625	29600	1021	FT	TRENCH IN PAVED AREA, TYPE B	
						11	13	12	14					625	30706	50	EACH	PULL BOX, 725.08, 24"	
						10	8	11	7					625	32000	36	EACH	GROUND ROD	
						1	2	1	3					625	34001	7	EACH	POWER SERVICE, AS PER PLAN	115
					112	1453	1021	981	781					625	36000	4348	FT	PLASTIC CAUTION TAPE	
							4	5	3					625	75403	12	EACH	LIGHT POLE REMOVED FOR STORAGE, AS PER PLAN	115
							4	8	3					625	75505	15	EACH	LUMINAIRE REMOVED FOR STORAGE, AS PER PLAN	115
																		TRAFFIC CONTROL	
				1172										630	03100	1172	FT	GROUND MOUNTED SUPPORT, NO. 3 POST	
				218										630	08520	218	FT	STREET NAME SIGN SUPPORT, NO. 3 POST	
				38										630	79100	38	EACH	SIGN HANGER ASSEMBLY, MAST ARM	
				99										630	79500	99	EACH	SIGN SUPPORT ASSEMBLY, POLE MOUNTED	
				1314										630	80100	1314	SQ FT	SIGN, FLAT SHEET	
				8.5										630	80401	9	SQ FT	SIGN, PERMANENT OVERLAY, AS PER PLAN	48
				21										630	80500	21	EACH	SIGN, DOUBLE FACED, STREET NAME	
				7										630	80510	7	EACH	SIGN, STREET NAME	
				104										630	85001	104	EACH	REMOVAL OF GROUND MOUNTED SIGN AND STORAGE, AS PER PLAN	48
				4										630	85100	4	EACH	REMOVAL OF GROUND MOUNTED SIGN AND REERECTION	
				69										630	86007	69	EACH	REMOVAL OF GROUND MOUNTED POST SUPPORT AND STORAGE, AS PER PLAN	48
				67										630	87511	67	EACH	REMOVAL OF POLE MOUNTED SIGN AND STORAGE, AS PER PLAN	48
				6										630	87520	6	EACH	REMOVAL OF POLE MOUNTED SIGN AND REERECTION	
				7										631	90501	7	EACH	INTERNALLY ILLUMINATED FIXED MESSAGE SIGN, AS PER PLAN	48
				0.76										644	00200	0.76	MILE	LANE LINE	
				0.78										644	00300	0.78	MILE	CENTER LINE (DOUBLE SOLID)	
				5573										644	00400	5573	FT	CHANNELIZING LINE	
				486										644	00500	486	FT	STOP LINE	
				1831										644	00600	1831	FT	CROSSWALK LINE	
				1300										644	00700	1300	FT	TRANSVERSE/DIAGONAL LINE	
				1520										644	01200	1520	FT	PARKING LOT STALL MARKING	
				90										644	01300	90	EACH	LANE ARROW	
				2377										644	01500	2377	FT	DOTTED LINE, 4" (WHITE)	
				361										644	01500	361	FT	DOTTED LINE, 4" (YELLOW)	
				65										644	01630	65	EACH	BIKE LANE SYMBOL MARKING	
				1										644	50100	1	EACH	PAVEMENT MARKING, MISC.: WORD ON PAVEMENT, 36"	48
				427										644	50200	427	SQ FT	PAVEMENT MARKING, MISC.: GREEN BIKE BOX	48
				3618										644	50200	3618	SQ FT	PAVEMENT MARKING, MISC.: GREEN PAINTED LANE	48

CALCULATED JMK
CHECKED WLC

GENERAL SUMMARY

WALNUT & CHERRY
COMPLETE STREET
BIKE LANES

R:\Stark\SARTA\Task 3 Canton\STA\91592\roadway\sheets\91592GG002.dgn 8/28/2012 2:44:32 PM bill

SHEET NUMBER 8	12	13	47	48	50	100	ITEM	ITEM EXT.	GRAND TOTAL	UNIT	DESCRIPTION	SEE SHEET NO.
											TRAFFIC SIGNALS	
						11	625	30702	11	EACH	PULL BOX, 725.06, 18"	49
						9	632	05005	9	EACH	VEHICULAR SIGNAL HEAD, (LED), 3-SECTION, 12" LENS, 1-WAY, POLYCARBONATE, AS PER PLAN (FOR BICYCLES)	49
						9	632	25000	9	EACH	COVERING OF VEHICULAR SIGNAL HEAD	
						7	632	26501	7	EACH	DETECTOR LOOP, AS PER PLAN	49
						7	632	27009	7	EACH	LOOP DETECTOR UNIT, DELAY AND EXTENSION TYPE, AS PER PLAN	49
			200			1922	632	40700	2122	FT	SIGNAL CABLE, 7 CONDUCTOR, NO. 14 AWG (BY CONTRACTOR)	
			120			1180	632	40700	1300	FT	SIGNAL CABLE, 7 CONDUCTOR, NO. 14 AWG (BY AEP)	
			60			566	632	65200	626	FT	LOOP DETECTOR LEAD-IN CABLE (BY CONTRACTOR)	
			70			692	632	65200	762	FT	LOOP DETECTOR LEAD-IN CABLE (BY AEP)	
						5	632	90020	5	EACH	REMOVAL OF MISCELLANEOUS TRAFFIC SIGNAL ITEM - PEDESTAL	50
						4	632	90103	4	EACH	REMOVAL OF TRAFFIC SIGNAL INSTALLATION FOR STORAGE, AS PER PLAN	50
						8	632	90201	8	EACH	REUSE OF VEHICULAR SIGNAL HEAD, AS PER PLAN	50
						18	632	90203	18	EACH	REUSE OF PEDESTRIAN SIGNAL HEAD, AS PER PLAN	50
					5		633	67301	5	EACH	PREEMPTION, AS PER PLAN	50
											LANDSCAPING	
6							661	40120	6	EACH	DECIDUOUS TREE, 3" CALIPER (CLEVELAND SELECT PEAR)	8
6							661	40120	6	EACH	DECIDUOUS TREE, 3" CALIPER (IVORY SILK LILAC)	8
6							661	40120	6	EACH	DECIDUOUS TREE, 3" CALIPER (SUN VALLEY MAPLE)	8
											MAINTENANCE OF TRAFFIC	
	25						410	12000	25	CU YD	TRAFFIC COMPACTED SURFACE, TYPE A OR B	
	25						410	13000	25	CU YD	TRAFFIC COMPACTED SURFACE, TYPE C	
		2					614	18000	2	EACH	MAINTAINING TRAFFIC MISC.: REMOVAL OF EXISTING LANE ARROW	13
		9740					614	18030	9740	FT	MAINTAINING TRAFFIC MISC.: REMOVAL OF EXISTING LANE LINE AND CHANNELIZING LINE	13
		700					614	18030	700	FT	MAINTAINING TRAFFIC MISC.: REMOVAL OF EXISTING PARKING LOT STALL MARKING	13
		100					614	11110	100	HOUR	LAW ENFORCEMENT OFFICER WITH PATROL CAR FOR ASSISTANCE	
	25						614	13000	25	CU YD	ASPHALT CONCRETE FOR MAINTAINING TRAFFIC	
	2.00	1.85					614	20100	3.85	MILE	WORK ZONE LANE LINE, CLASS I, 642 PAINT	
	2.00	1.85					614	22100	3.85	MILE	WORK ZONE EDGE LINE, CLASS I, 642 PAINT	
	500						614	26200	500	FT	WORK ZONE STOP LINE, CLASS I, 642 PAINT	
	1000						614	27200	1000	FT	WORK ZONE CROSSWALK LINE, CLASS I, 642 PAINT	
	10						614	30200	10	EACH	WORK ZONE ARROW, CLASS I, 642 PAINT	
		15					614	40051	15	EACH	BUSINESS ENTRANCE SIGN, AS PER PLAN	13
	1						616	10000	1	M GAL	WATER	
											INCIDENTALS	
							614	11000	LUMP		MAINTAINING TRAFFIC	
							623	10000	LUMP		CONSTRUCTION LAYOUT STAKES	
							624	10000	LUMP		MOBILIZATION	

CALCULATED JMK
CHECKED WLC

GENERAL SUMMARY

WALNUT & CHERRY
COMPLETE STREET
BIKE LANES

R:\Stark\SARTA\Task 3 Canton\STA\91592\roadway\sheets\91592GG003.dgn 8/28/2012 2:52:27 PM bill

REF. NO.	SHEET NO.	STATION FROM (ALL STATIONS REFERENCE WALNUT AVENUE UNLESS OTHERWISE NOTED)	STATION TO	SIDE	202 PAVEMENT REMOVED SQ FT	202 WALK REMOVED SQ FT	202 CONCRETE MEDIAN REMOVED SQ YD	202 CURB REMOVED FT	202 PIPE REMOVED, 24" AND UNDER FT	202 GUARD POST REMOVED EACH	202 MANHOLE REMOVED EACH	202 CATCH BASIN OR INLET REMOVED EACH	202 SPECIAL - FILL AND PLUG EXISTING CONDUIT FT	202 REMOVAL MISC.: PARKING METER EACH
R-1	24	160+53	161+05	LT				52						
R-2	24	160+40	161+84	LT		722								
R-3	24	160+40	161+05	RT		404								
R-4		NOT USED												
R-5	24	160+40	161+85	LT				149						
R-6	24	161+20	161+42	LT						4				
R-7	24	160+40	161+91	RT				158						
R-8	24	161+35		RT						1				
R-9	24	161+60		LT								1		
R-10	24	161+60	161+60	LT									9	
R-11	24	161+74	191+91	RT	111									
R-12	25	161+96	162+92	LT		410								
R-13	25	161+95	162+92	LT				106						
R-14	25	162+08		RT						1				
R-15	25	162+01	162+80	RT				93						
R-16		NOT USED												
R-17	25	162+01	162+84	RT		344								
R-18	27	174+16	174+47	RT	184									
R-19	27	176+30	177+30	RT				100						
R-20	27	176+30	177+30	RT		607								
R-21	29	183+30	183+52	RT	214									
R-22	29	183+35	184+65	RT		789								
R-23	29	183+15	184+90	RT				190						
R-24	29	183+65	184+65	RT	1402									
R-25	29	184+04	184+49	RT			3							
R-26	29	184+65	184+90	RT	238									
R-27	29	186+16	187+66	RT				150						
R-28	29	186+16	187+50	RT		1732								
R-29	30	187+71	20+48 6TH ST. NE	LT				37						
R-30	30	187+73	20+48 6TH ST. NE	LT		211								
R-31	30	19+52 6TH ST. NE		RT							1			
R-32	30	19+47 6TH ST. NE	19+52 6TH ST. NE	RT					5					
R-33	30	19+47 6TH ST. NE	19+49 6TH ST. NE	RT					3					
R-34	30	19+47 6TH ST. NE		RT								1		
R-35	30	19+35 6TH ST. NE	188+58	RT				62						
R-36	30	19+35 6TH ST. NE	188+58	RT		555								
R-37	30	189+01		RT										1
R-38	30	189+22		RT										1
R-39	30	189+21		LT										1
R-40	30	189+43		LT										1
R-41	30	189+84		RT										1
R-42	30	190+02		RT										1
R-43	30	190+11		LT										1
R-44	30	190+25	30+46 5TH ST. NE	LT		201								
R-45	30	190+25	30+55 5TH ST. NE	LT				40						
R-46	30	30+47 5TH ST. NE		LT								1		
R-47	30	30+47 5TH ST. NE	30+47 5TH ST. NE	LT					2					
R-48	30	190+07	29+60 5TH ST. NE	RT		393								
R-49	30	190+07	29+40 5TH ST. NE	RT				66						
R-50	30	29+53 5TH ST. NE		LT								1		
R-51	30	29+53 5TH ST. NE	29+54 5TH ST. NE	LT					4					
R-52	30	30+52 5TH ST. NE	190+97	RT				32						
R-53	30	30+52 5TH ST. NE	190+97	RT		198								
R-54	30	191+28		RT										1
R-55	30	29+60 5TH ST. NE	39+54 4TH ST. NE	RT		2505								
R-56	30	29+59 5TH ST. NE	39+54 4TH ST. NE	RT				241						
R-57	30	191+33		LT										1
R-58	30	191+57		LT										1
R-59	30	191+75		LT										1
TOTALS CARRIED TO GENERAL SUMMARY					2149	9071	3	1476	14	6	1	4	9	11

CALCULATED JMK
CHECKED WLC

ESTIMATED QUANTITIES

WALNUT & CHERRY
COMPLETE STREET
BIKE LANES

R:\Stark\SARTA\Task 3 Canton\STA\91592\roadway\sheets\91592G0001.dgn 6/28/2012 1:42:25 PM jroth

REF. NO.	SHEET NO.	STATION FROM (ALL STATIONS REFERENCE WALNUT AVENUE UNLESS OTHERWISE NOTED)	STATION TO	SIDE	202 PAVEMENT REMOVED SQ FT	202 WALK REMOVED SQ FT	202 CURB REMOVED FT	202 PIPE REMOVED, 24" AND UNDER FT	202 CATCH BASIN OR INLET REMOVED EACH	202 REMOVAL MISC.: PARKING METER EACH
R-60	31	192+33		LT						1
R-61	31	192+57		LT						1
R-62	31	192+90	40+58 4TH ST. NE	LT		257				
R-63	31	192+90	40+58 4TH ST. NE	LT			38			
R-64	31	40+47 4TH ST. NE		LT					1	
R-65	31	40+42 4TH ST. NE	40+47 4TH ST. NE	RT/LT				23		
R-66	31	40+42 4TH ST. NE	40+47 4TH ST. NE	RT				14		
R-67	31	40+47 4TH ST. NE		RT					1	
R-68	31	40+56 4TH ST. NE	193+60	RT			37			
R-69	31	40+56 4TH ST. NE	193+60	RT		277				
R-70	31	39+54 4TH ST. NE	49+58 3RD ST. NE	RT			239			
R-71	31	193+95		LT						1
R-72	31	194+04		RT						1
R-73	31	194+28		RT						1
R-74	31	194+41		LT						1
R-75	31	194+64		LT						1
R-76	31	194+82		LT						1
R-77	31	39+54 4TH ST. NE	49+58 3RD ST. NE	RT		2470				
R-78	31	195+54	50+55 3RD ST. NE	LT			34			
R-79	31	195+54	50+55 3RD ST. NE	LT		186				
R-80	31	50+47 3RD ST. NE		LT					1	
R-81	31	50+46 3RD ST. NE	50+47 3RD ST. NE	LT				11		
R-82	31	50+46 3RD ST. NE	50+46 3RD ST. NE	LT/RT				26		
R-83	31	50+46 3RD ST. NE		RT					1	
R-84	31	50+56 3RD ST. NE	196+20	RT			39			
R-85	31	50+55 3RD ST. NE	196+20	RT		298				
R-86	31	49+45 3RD ST. NE	196+31	RT		411				
R-87	31	49+45 3RD ST. NE	196+31	RT			52			
R-88	31	196+49		LT						1
R-89	31	196+73		LT						1
R-90	31	196+96		LT						1
R-91	32	197+14		LT						1
R-92	32	197+03	59+45 2ND ST. NE	RT			149			
R-93	32	197+03	59+45 2ND ST. NE	RT		1431				
R-94	32	197+81		LT						1
R-95	32	198+10	60+55 2ND ST. NE	LT			38			
R-96	32	198+10	60+56 2ND ST. NE	LT		304				
R-97	32	60+47 2ND ST. NE		LT					1	
R-98	32	60+47 2ND ST. NE	60+47 2ND ST. NE	LT				9		
R-99	32	60+47 2ND ST. NE	60+47 2ND ST. NE	LT/RT				26		
R-100	32	60+47 2ND ST. NE		RT					1	
R-101	32	60+56 2ND ST. NE	198+85	RT			42			
R-102	32	60+56 2ND ST. NE	198+85	RT		345				
R-103	32	199+12		RT						1
R-104	32	199+34		RT						1
R-105	32	199+57		RT						1
R-106	32	199+74		LT						1
R-107	32	199+97		LT						1
R-108	32	199+80		RT						1
R-109	32	200+20		LT						1
R-110	32	200+03		RT						1
R-111	32	200+40		LT						1
R-112	32	200+26		RT						1
R-113	32	198+65	200+77	RT		2328				
R-114	32	200+45		RT						1
R-115	32	198+65	200+77	RT			222			
R-116	32	200+50	200+97	LT			64			
R-117	32	200+50	20+97	LT		277				
R-118	32	200+80	200+93	LT	109					
TOTALS CARRIED TO GENERAL SUMMARY					109	8584	954	109	6	24

CALCULATED JMK
CHECKED WLC

ESTIMATED QUANTITIES

WALNUT & CHERRY
COMPLETE STREET
BIKE LANES

R:\Stark\SARTA\Task 3 Canton\STA\91592\roadway\sheets\91592GQ002.dgn 6/28/2012 1:42:47 PM jroth

REF. NO.	SHEET NO.	STATION (ALL STATIONS REFERENCE WALNUT AVENUE UNLESS OTHERWISE NOTED) FROM	TO	SIDE	202 PAVEMENT REMOVED SQ FT	202 WALK REMOVED SQ FT	202 CURB REMOVED FT	202 PIPE REMOVED, 24" AND UNDER FT	202 MANHOLE REMOVED EACH	202 CATCH BASIN OR INLET REMOVED EACH	202 REMOVAL MISC.: PARKING METER EACH
R-119	32	201+52	203+69	LT			250				
R-120	32	201+52	203+69	LT		889					
R-121	33	202+22		RT							1
R-122	33	202+21		LT							1
R-123	33	202+45		LT							1
R-124	33	202+45		RT							1
R-125	33	202+68		LT							1
R-126	33	202+91		LT							1
R-127	33	202+90		RT							1
R-128	33	203+13		RT							1
R-129	33	203+13		LT							1
R-130	33	203+14	79+54 2ND ST. SE	RT			74				
R-131	33	203+14	79+54 2ND ST. SE	RT		965					
R-132	33	203+40		LT						1	
R-133	33	203+40	203+67	LT				27			
R-134	33	203+67		LT					1		
R-135	33	80+43 2ND ST. SE		LT					1		
R-136	33	80+51 2ND ST. SE		LT						1	
R-137	33	80+49 2ND ST. SE		RT						1	
R-138	33	80+22 2ND ST. SE	80+43 2ND ST. SE	LT				21			
R-139	33	80+43 2ND ST. SE	80+51 2ND ST. SE	LT				9			
R-140	33	80+43 2ND ST. SE	80+49 2ND ST. SE	LT/RT				33			
R-141	33	80+55 2ND ST. SE	204+35	LT			53				
R-142	33	80+55 2ND ST. SE	204+35	LT		458					
R-143	33	79+54 2ND ST. SE	204+33	RT			43				
R-144	33	79+54 2ND ST. SE	204+33	RT		417					
R-145	33	206+02	89+58 3RD ST. SE	RT			37				
R-146	33	206+02	89+58 3RD ST. SE	RT		330					
R-147	33	89+58 3RD ST. SE	207+07	RT			45				
R-148	33	89+58 3RD ST. SE	207+07	RT		461					
R-149	33	206+97	207+17	LT			49				
R-150	33	206+97	207+17	LT		135					
R-151	34	206+97	207+43	LT	942						
R-152	34	207+28		LT							1
R-153	34	207+51		LT							1
R-154	34	207+74		LT							1
R-155	34	207+96		LT							1
R-156	34	208+19		LT							1
R-157	34	208+41		LT							1
R-158	34	208+59		LT							1
TOTALS CARRIED TO GENERAL SUMMARY					942	3655	551	90	2	3	16

CALCULATED JMK
CHECKED WLC

ESTIMATED QUANTITIES

WALNUT & CHERRY COMPLETE STREET BIKE LANES

R:\Stark\SARTA\Task 3 Canton\STA\91592\roadway\sheets\91592G0003.dgn 6/28/2012 1:43:32 PM jroth

REF. NO.	SHEET NO.	STATION FROM (ALL STATIONS REFERENCE WALNUT AVENUE UNLESS OTHERWISE NOTED)	STATION TO	SIDE	WALK REMOVED (SQ FT)	CURB REMOVED (FT)
					202	202
R-159	35	134+62	135+16	RT		54
R-160	35	134+62	135+16	RT	764	
R-161	35	139+83	140+37	RT		54
R-162	35	139+83	140+37	RT	783	
R-163	35	150+22	105+76	RT		54
R-164	35	150+22	150+76	RT	783	
R-165	35	154+83	155+37	RT		54
R-166	35	154+83	155+37	RT	783	
R-167	36	168+58	169+12	RT		54
R-168	36	168+58	169+10	RT	494	
TOTALS CARRIED TO GENERAL SUMMARY					3607	270

CALCULATED JMK
CHECKED WLC

ESTIMATED QUANTITIES

WALNUT & CHERRY
COMPLETE STREET
BIKE LANES

R:\Stark\SARTA\Task 3 Canton\STA\91592\roadway\sheets\91592GQ004.dgn 6/28/2012 1:43:56 PM jroth

REF. NO.	SHEET NO.	STATION (ALL STATIONS REFERENCE WALNUT AVENUE UNLESS OTHERWISE NOTED) FROM	TO	SIDE	608 CURB RAMP, TYPE A1 SQ FT	608 CURB RAMP, TYPE A1 EACH	608 CURB RAMP, TYPE C2 EACH
CR-1	24	161+90		RT			1
CR-2	25	162+01		RT			1
CR-3	27	175+48		LT	105		
CR-4	27	175+98		LT	105		
CR-5	30	187+79		LT		1	
CR-6	30	187+91		LT		1	
CR-7	30	188+24		RT		1	
CR-8	30	188+32		RT		1	
CR-9	30	190+44		LT		1	
CR-10	30	190+73		LT		1	
CR-11	30	190+87		LT		1	
CR-12	30	190+40		RT		1	
CR-13	30	190+49		RT		1	
CR-14	30	190+72		RT		1	
CR-15	30	190+87		RT		1	
CR-16	31	193+11		LT		1	
CR-17	31	NOT USED					
CR-18	31	193+02		RT		1	
CR-19	31	193+13		RT		1	
CR-20	31	NOT USED					
CR-21	31	193+46		LT		1	
CR-22	31	193+37		RT		1	
CR-23	31	193+48		RT		1	
CR-24	31	195+68		RT		1	
CR-25	31	195+75		RT		1	
CR-26	31	195+69		LT		1	
CR-27	31	196+01		LT		1	
CR-28	31	195+95		RT		1	
CR-29	31	196+07		RT		1	
CR-30	32	198+35		LT		1	
CR-31	32	NOT USED					
CR-32	32	198+30		RT		1	
CR-33	32	198+36		RT		1	
CR-34	32	NOT USED					
CR-35	32	198+64		LT		1	
CR-36	32	198+56		RT		1	
CR-37	32	198+66		RT		1	
CR-38	32	200+86		LT		1	
CR-39	33	203+76		LT		1	
CR-40	33	NOT USED					
CR-41	33	203+70		RT		1	
CR-42	33	203+77		RT		1	
CR-43	33	NOT USED					
CR-44	33	204+06		LT		1	
CR-45	33	203+97		RT		1	
CR-46	33	204+10		RT		1	
CR-47	33	206+22		RT		1	
CR-48	33	206+28		RT		1	
CR-49	33	206+68		RT		1	
CR-50	33	206+91		RT		1	
CR-51	33	206+91		LT		1	
CR-52	33	206+90		LT		1	
TOTALS CARRIED TO GENERAL SUMMARY					210	42	2

REF. NO.	SHEET NO.	STATION (ALL STATIONS REFERENCE WALNUT AVENUE UNLESS OTHERWISE NOTED) FROM	TO	SIDE	608 5" CONCRETE WALK, AS PER PLAN SQ FT	690 SPECIAL - MISC.: TYPICAL MAJOR BRT STOP WITH BUS SHELTER EACH	690 SPECIAL - MISC.: TYPICAL MINOR BRT STOP WITHOUT BUS SHELTER EACH
SW-1	24	160+40	161+84	LT	1641		
SW-2	24	160+40	161+05	RT	818		
SW-3	24	161+25	161+91	RT	884		
SW-4	24-25	161+95	162+92	LT	1122		
SW-5	25	162+02	162+23	RT	186		
SW-6	25	162+55	162+84	RT	279		
SW-7	27	176+30	176+87	RT	569		
SW-8	28	177+05	177+30	RT	265		
SW-9	29	183+47	184+65	RT	1706		
SW-10	29-30	186+16	187+76	RT	1709		
SW-11	30	187+73	187+91	LT	448		
SW-12	30	188+23	188+58	RT	1229		
SW-13	30	190+25	190+49	LT	219		
SW-14	30	190+72	190+97	LT	408		
SW-15	30	190+07	190+49	RT	1037		
SW-16	30	190+72	191+97	RT	2287		
SW-17	31	192+09	193+13	RT	2063		
SW-18	31	192+90	193+12	LT	396		
SW-19	31	193+37	193+60	LT	368		
SW-20	31	193+37	195+75	RT	4954		
SW-21	31	195+54	195+75	LT	373		
SW-22	31	195+96	196+20	LT	407		
SW-23	31	195+96	196+31	RT	1010		
SW-24	32	197+03	197+38	RT	802		
SW-25	32	197+50	197+83	RT	660		
SW-26	32	197+95	198+36	RT	798		
SW-27	32	198+10	198+36	LT	477		
SW-28	32	198+57	198+85	LT	432		
SW-29	32	198+57	200+77	RT	3207		
SW-30	32	200+50	200+82	LT	151		
SW-31	32	200+86	200+97	LT	75		
SW-32	32	201+52	201+84	LT	57		
SW-33	32-33	201+84	203+24	LT	1190		
SW-34	33	203+24	203+77	LT	758		
SW-35	33	203+13	203+77	RT	1635		
SW-36	33	203+98	204+35	LT	653		
SW-37	33	203+98	204+33	RT	732		
SW-38	33	206+01	206+27	RT	392		
SW-39	33-34	206+68	207+07	RT	573		
SW-40	33-34	206+83	207+17	LT	672		
SW-41	35	134+62 CHERRY AVE.	135+16 CHERRY AVE.	RT	596		
SW-42	35	139+83 CHERRY AVE.	140+37 CHERRY AVE.	RT	612		
SW-43	35	150+22 CHERRY AVE.	150+76 CHERRY AVE.	RT	463		
SW-44	35	154+83 CHERRY AVE.	155+37 CHERRY AVE.	RT	450		
SW-45	36	168+58 CHERRY AVE.	168+92 CHERRY AVE.	RT	323		
B-1	25	162+30		RT		1	
B-2	27-28	176+80		RT			1
B-3	29	183+90		RT			1
B-4	29-30	186+91		RT		1	
B-5	31	193+80		RT			1
B-6	35	134+89 CHERRY AVE.		RT			1
B-7	35	140+10 CHERRY AVE.		RT			1
B-8	35	150+49 CHERRY AVE.		RT		1	
B-9	35	155+10 CHERRY AVE.		RT			1
B-10	36	168+85 CHERRY AVE.		RT			1
TOTALS CARRIED TO GENERAL SUMMARY					40086	3	7

CALCULATED JMK
CHECKED WLC

ESTIMATED QUANTITIES

WALNUT & CHERRY COMPLETE STREET BIKE LANES

R:\Stark\SARTA\Task 3 Canton\STA\91592\roadway\sheets\91592GQ005.dgn 6/28/2012 1:45:47 PM jroth

REF. NO.	SHEET NO.	STATION (ALL STATIONS REFERENCE WALNUT AVENUE UNLESS OTHERWISE NOTED) FROM	TO	SIDE	690 SPECIAL - MISC.: PARKING METER, SINGLE (EACH)	690 SPECIAL - MISC.: PARKING METER, DOUBLE (EACH)	690 SPECIAL - MISC.: TREE GRATE (EACH)	690 SPECIAL - MISC.: 2-1/4" BRICK WALKWAY PAVERS (SQ FT)	690 SPECIAL - MISC.: BRICK BOX FORM (SQ FT)
M-1	30	188+57		RT	1				
M-2	30	188+86		RT		1			
M-3	30	189+63		RT		1			
M-4	30	189+92		RT		1			
M-5	30	191+27		RT		1			
M-6	30	191+55		RT		1			
M-7	31	194+87		RT		1			
M-8	31	195+15		RT		1			
M-9	31	196+31		RT	1				
M-10	31	196+59		RT		1			
M-11	31	196+88		RT		1			
M-12	32	199+13		RT		1			
M-13	32	199+42		RT		1			
M-14	32	199+70		RT		1			
M-15	32	199+98		RT		1			
M-16	32	200+26		RT		1			
M-17	32	201+85		RT	1				
M-18	33	202+13		RT		1			
M-19	33	202+41		RT		1			
M-20	33	202+70		RT		1			
M-21	33	202+98		RT		1			
M-22	34	207+30		RT		1			
M-23	34	207+58		RT		1			
M-24	34	207+87		RT		1			
M-25	34	208+15		RT		1			
M-26	34	208+43		RT		1			
SC-1	24	160+69		LT			1	80	80
SC-2	24	160+69		RT			1	80	80
SC-3	24	161+49		LT			1	80	80
SC-4	24	161+49		RT			1	80	80
SC-5	25	162+29		LT			1	80	80
SC-6	25	162+74		RT			1	40	40
SC-7	25	162+79		LT			1	80	80
SC-8	27	176+69		RT			1	80	80
SC-9	28	177+24		RT			1	40	40
SC-10	29	183+79		RT			1	80	80
SC-11	29	184+34		RT			1	80	80
SC-12	29	186+62		RT			1	80	80
SC-13	30	187+34		RT			1	80	80
SC-14	31	192+25		RT			1	80	80
SC-15	31	192+75		RT			1	80	80
SC-16	31	193+78		RT			1	80	80
SC-17	31	194+58		RT			1	80	80
SC-18	31	195+38		RT			1	80	80
TOTALS CARRIED TO GENERAL SUMMARY					3	23	18	1360	1360

REF. NO.	SHEET NO.	STATION (ALL STATIONS REFERENCE WALNUT AVENUE UNLESS OTHERWISE NOTED) FROM	TO	SIDE	609 CURB, TYPE 6 (FT)
C-1	24-25	160+30	162+92	LT	263
C-2	24	160+40	161+91	RT	161
C-3	25	162+01	162+80	RT	88
C-4	27-28	176+30	177+30	RT	101
C-5	29	183+15	184+90	RT	177
C-6	29-30	186+16	187+66	RT	152
C-7	30	187+71	20+48 6TH ST. NE	LT	53
C-8	30	19+35 6TH ST. NE	188+58	RT	104
C-9	30	190+25	30+55 5TH ST. NE	LT	47
C-10	30	30+52 5TH ST. NE	190+97	LT	49
C-11	30	190+07	29+40 5TH ST. NE	RT	104
C-12	30-31	29+59 5TH ST. NE	39+54 4TH ST. NE	RT	319
C-13	31	192+90	40+58 4TH ST. NE	LT	54
C-14	31	40+57 4TH ST. NE	193+60	LT	47
C-15	31	39+54 4TH ST. NE	49+58 3RD ST. NE	RT	329
C-16	31	195+54	50+56 3RD ST. NE	LT	44
C-17	31	50+56 3RD ST. NE	196+20	LT	52
C-18	31	49+45 3RD ST. NE	196+32	RT	89
C-19	32	197+03	59+45 2ND ST. NE	RT	173
C-20	32	198+10	60+56 2ND ST. NE	LT	55
C-21	32	60+56 2ND ST. NE	198+85	LT	52
C-22	32	59+56 2ND ST. NE	200+77	RT	270
C-23	32	200+50	70+48 E. TUSCARAWAS ST.	LT	59
C-24	32-33	201+53	80+55 2ND ST. SE	LT	258
C-25	33	203+13	79+53 2ND ST. SE	RT	106
C-26	33	79+54 2ND ST. SE	204+33	RT	68
C-27	33	80+55 2ND ST. SE	204+35	LT	68
C-28	33	206+02	89+58 3RD ST. SE	LT	46
C-29	33-34	89+58 3RD ST. SE	207+07	RT	59
C-30	33-34	207+04	207+18	LT	85
C-31	35	134+62 CHERRY AVE.	135+16 CHERRY AVE.	RT	54
C-32	35	139+83 CHERY AVE.	140+37 CHERRY AVE.	RT	54
C-33	35	150+22 CHERRY AVE.	150+76 CHERRY AVE.	RT	54
C-34	35	154+83 CHERRY AVE.	155+37 CHERRY AVE.	RT	54
C-35	36	168+58 CHERRY AVE.	169+12 CHERRY AVE.	RT	54
TOTALS CARRIED TO GENERAL SUMMARY					3802

CALCULATED JMK
CHECKED WLC

ESTIMATED QUANTITIES

WALNUT & CHERRY COMPLETE STREET BIKE LANES

R:\Stark\SARTA\Task 3 Canton\STA\91592\roadway\sheets\91592GQ006.dgn 6/28/2012 1:46:11 PM jroth

REF. NO.	SHEET NO.	STATION FROM (ALL STATIONS REFERENCE WALNUT AVENUE UNLESS OTHERWISE NOTED)	STATION TO	SIDE	603 12" CONDUIT, TYPE C FT	603 15" CONDUIT, TYPE B FT	603 15" CONDUIT, TYPE C FT	603 18" CONDUIT, TYPE C FT	604 CATCH BASIN, NO. 3A EACH	604 CATCH BASIN ADJUSTED TO GRADE, AS PER PLAN EACH	604 MANHOLE, NO. 3 EACH	604 MANHOLE ADJUSTED TO GRADE EACH
AJ-1	29	184+62		RT								1
AJ-2	30	188+46		RT								1
AJ-3	30	190+23		RT						1		
AJ-4	30	190+95		RT								1
AJ-5	30	191+95		RT								1
AJ-6	31	192+88		RT								1
AJ-7	31	193+40		RT								1
AJ-8	31	195+51		RT						1		
AJ-9	31	50+46 3RD ST. NE		LT								1
AJ-10	31	196+26		RT						1		
AJ-11	32	198+06		RT						1		
AJ-12	32	198+22		RT								1
AJ-12A	32	198+88		RT						1		
AJ-13	32	60+47 2ND ST. NE		LT								1
AJ-14	33	203+26		RT								1
AJ-15	33	203+40		RT						1		
AJ-16	33	203+63		RT								1
AJ-17	33	203+71		RT								1
AJ-18	33	206+06		RT						1		
AJ-19	33	206+93		RT								1
A-1		NOT USED										
A-2	30	19+49 6TH ST. NE		RT					1			
A-3	30	190+09		RT					1			
A-4	30	30+47 5TH ST. NE		LT					1			
A-5	30	29+54 5TH ST. NE		LT					1			
A-6	30	191+73		RT					1			
A-7	31	192+88		RT					1			
A-8	31	40+57 4TH ST. NE		LT					1			
A-9	31	40+56 4TH ST. NE		RT					1			
A-10	31	195+33		RT					1			
A-11	31	50+55 3RD ST. NE		LT					1			
A-12	31	50+55 3RD ST. NE		RT					1			
A-13	32	197+06		RT					1			
A-14	32	198+22		RT					1			
A-15	32	60+55 2ND ST. NE		LT					1			
A-16	32	60+55 2ND ST. NE		RT					1			
A-17	33	203+19		RT					1			
A-18	33	203+50		LT					1			
A-19	33	203+67		LT							1	
A-20	33	80+50 2ND ST. NE		LT							1	
A-21	33	80+54 2ND ST. SE		LT					1			
A-22	33	80+54 2ND ST. SE		RT					1			
A-23	33	206+06		RT					1			
P-1		NOT USED										
P-2	30	29+53 5TH ST. NE	29+54 5TH ST. NE	LT	4							
P-3	31	40+42 4TH ST. NE	40+57 4TH ST. NE	LT			29					
P-4	31	40+42 4TH ST. NE	40+56 4TH ST. NE	RT			20					
P-5	31	195+51	50+55 3RD ST. NE	LT		32						
P-6	31	50+46 3RD ST. NE	50+55 3RD ST. NE	LT			13					
P-7	31	50+46 3RD ST. NE	50+55 3RD ST. NE	RT			26					
P-8	32	198+22	198+22	RT	6							
P-9	32	60+47 2ND ST. NE	60+55 2ND ST. NE	LT			12					
P-10	32	60+47 2ND ST. NE	60+55 2ND ST. NE	RT			27					
P-11	33	203+50	203+67	LT				17				
P-12	33	203+67	80+50 2ND ST. NE	LT				30				
P-13	33	80+50 2ND ST. NE	80+54 2ND ST. NE	LT			8					
P-14	33	80+54 2ND ST. NE	80+54 2ND ST. NE	LT/RT			34					
P-15	33	206+06	206+06	RT			5					
TOTALS CARRIED TO GENERAL SUMMARY					10	32	174	47	20	7	2	13

CALCULATED JMK
CHECKED WLC

ESTIMATED QUANTITIES

WALNUT & CHERRY COMPLETE STREET BIKE LANES

R:\Stark\SARTA\Task 3 Canton\STA\91592\roadway\sheets\91592GQ007.dgn 6/28/2012 1:47:05 PM jroth

BENCHMARK#13 (XXX)
CHISELED "+" ON NORTHEAST ANCHOR BOLT ON TRAFFIC SIGNAL POLE AT SOUTHEAST CORNER OF 12TH ST. AND WALNUT AVE. NE
@STA. 160+32.38, 28.28' LEFT ℄ WALNUT AVE.
ELEV. 1078.59

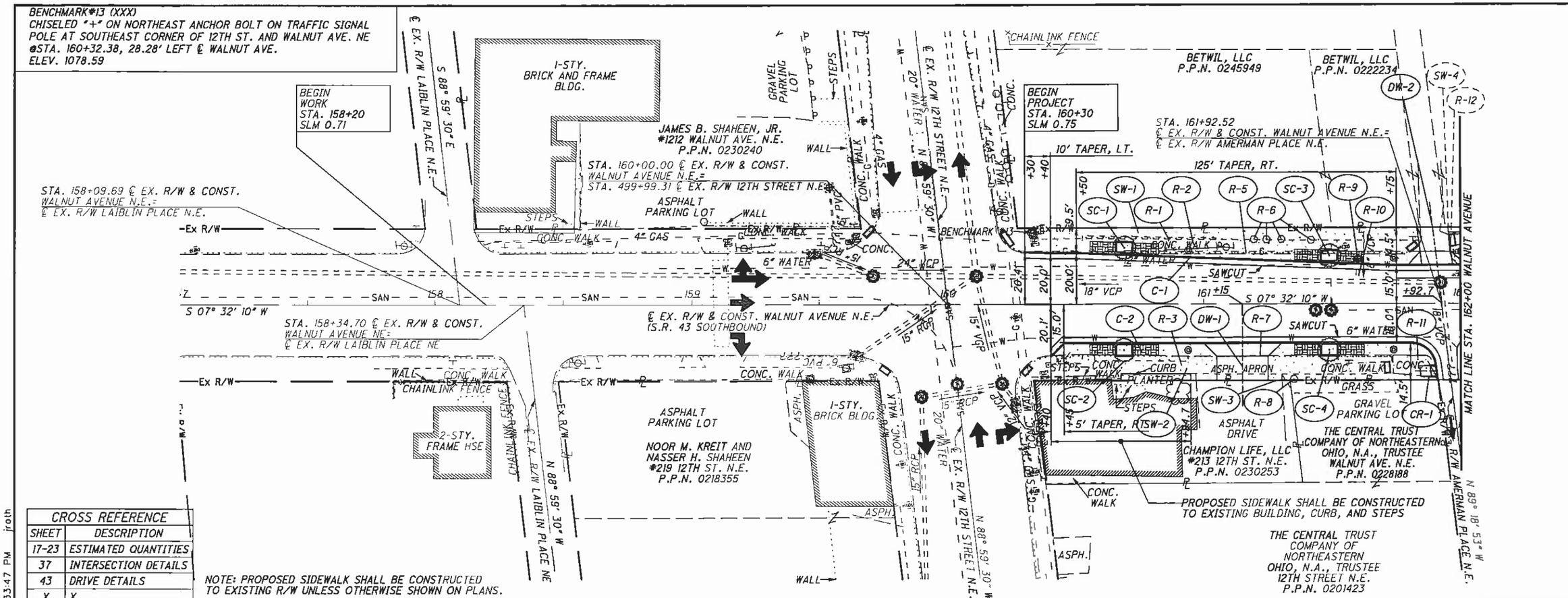

CROSS REFERENCE	
SHEET	DESCRIPTION
17-23	ESTIMATED QUANTITIES
37	INTERSECTION DETAILS
43	DRIVE DETAILS
X	X

NOTE: PROPOSED SIDEWALK SHALL BE CONSTRUCTED TO EXISTING R/W UNLESS OTHERWISE SHOWN ON PLANS.

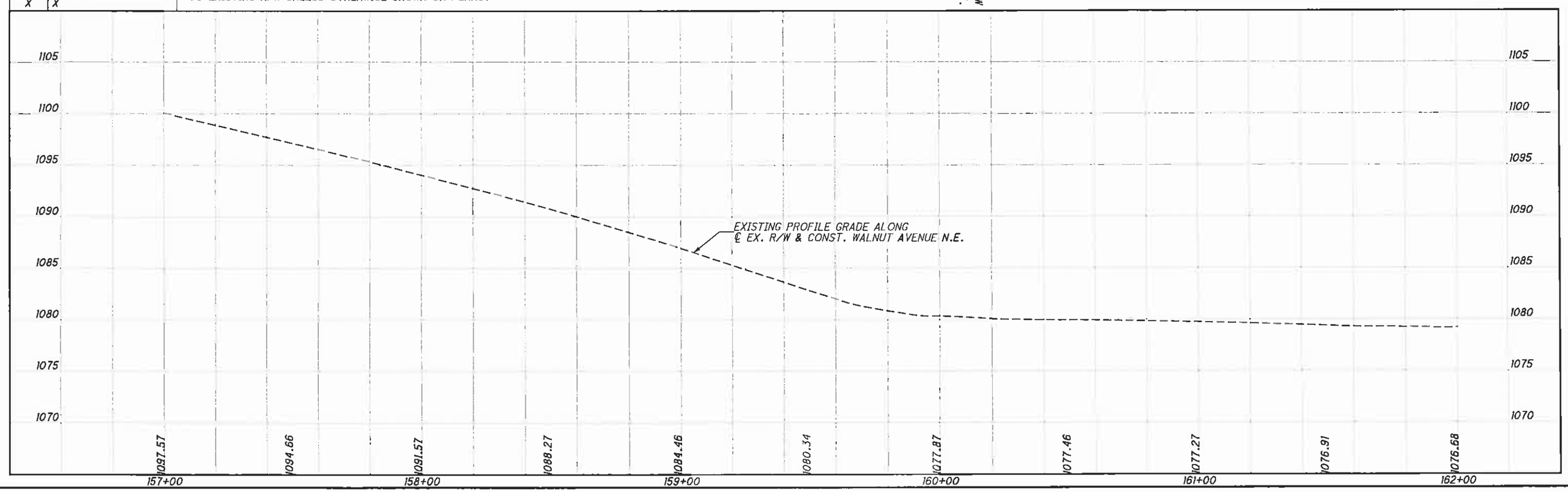

HORIZONTAL SCALE IN FEET 0 10 20 40

CALCULATED JMK
CHECKED WLC

PLAN AND PROFILE - WALNUT AVENUE STA. 157+00 TO STA. 162+00

WALNUT & CHERRY COMPLETE STREET BIKE LANES

R:\Stark\SARTA\Task 3 Canton\STA\91592\roadway\sheets\91592GP001.dgn 6/28/2012 1:33:47 PM jroth

BENCHMARK #14 (SV2131)
CHISELED "□" ON NORTHWEST CORNER OF FIRST STEP OF CONCRETE STEPS TO COMMUNITY LIFE CHURCH ON EAST SIDE OF WALNUT AVE. NE @STA. 165+61.88, 28.89' LEFT ℄ WALNUT AVE.
ELEV. 1075.25

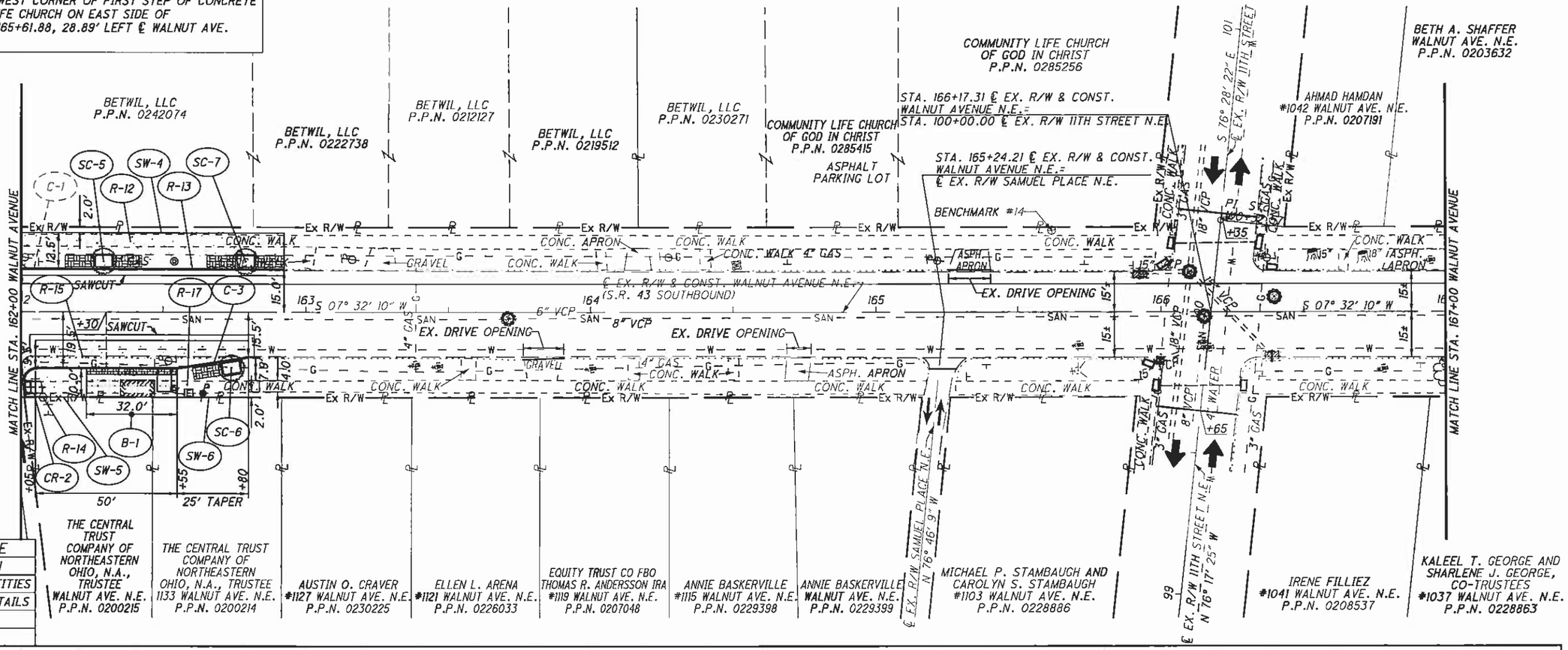

CROSS REFERENCE	
SHEET	DESCRIPTION
17-23	ESTIMATED QUANTITIES
37	INTERSECTION DETAILS
XX	XX
XX	XX

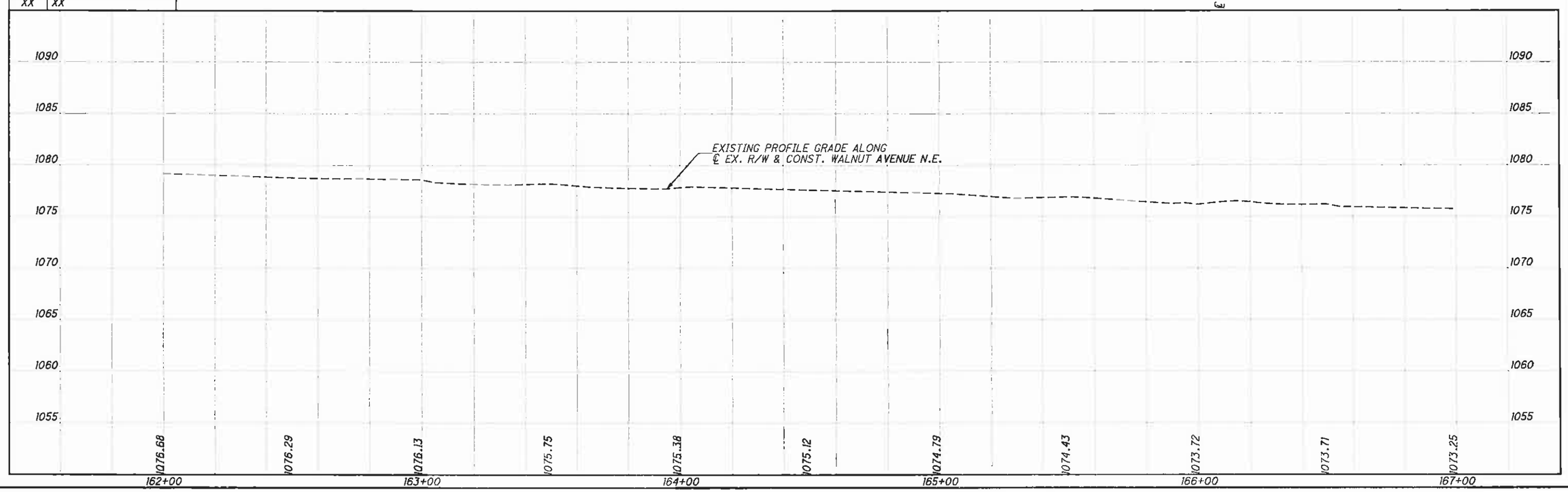

HORIZONTAL SCALE IN FEET 0 10 20 40

CALCULATED JMK
CHECKED WLC

PLAN AND PROFILE - WALNUT AVENUE
STA. 162+00 TO STA. 167+00

WALNUT & CHERRY COMPLETE STREET BIKE LANES

R:\Stark\SARTA\Task 3 Canton\STA\91592\roadway\sheets\91592GP002.dgn 6/28/2012 1:34:36 PM jroth

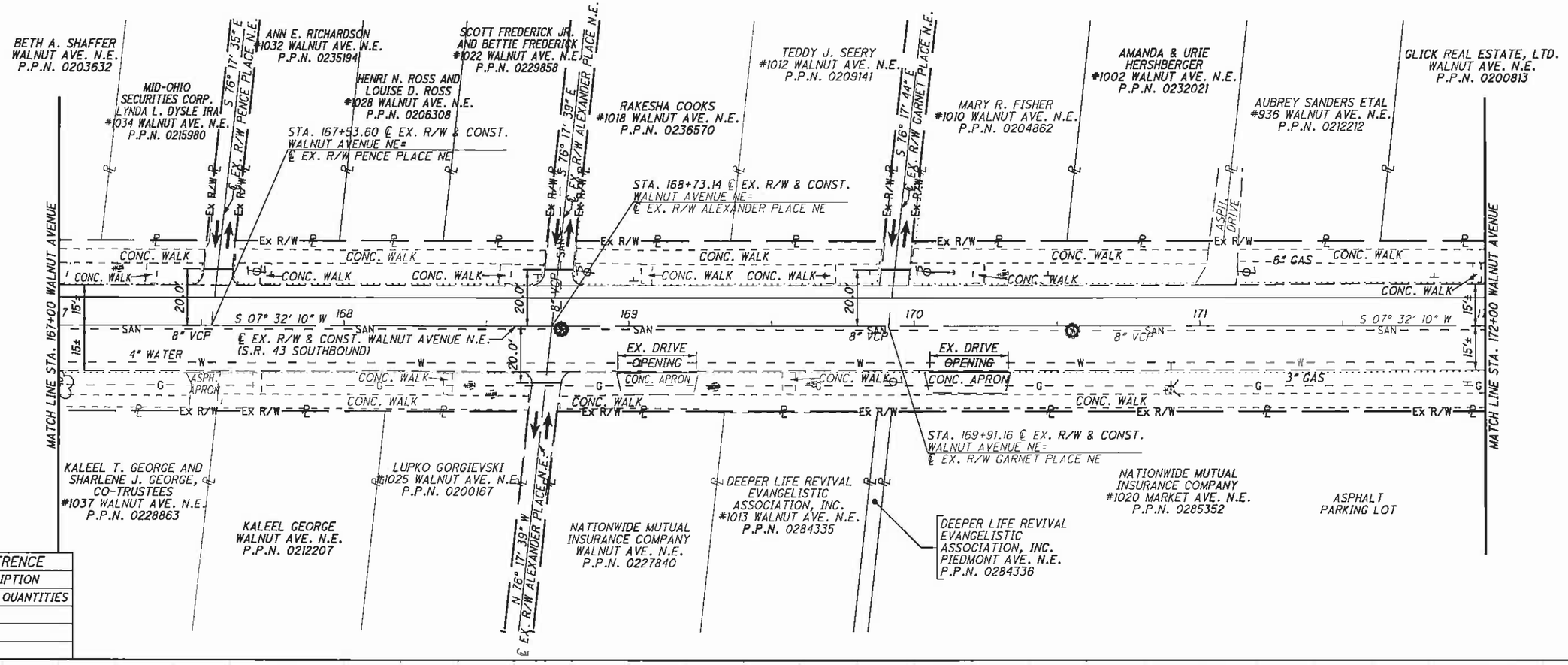

CROSS REFERENCE	
SHEET	DESCRIPTION
17-23	ESTIMATED QUANTITIES
XX	XX
XX	XX
XX	XX

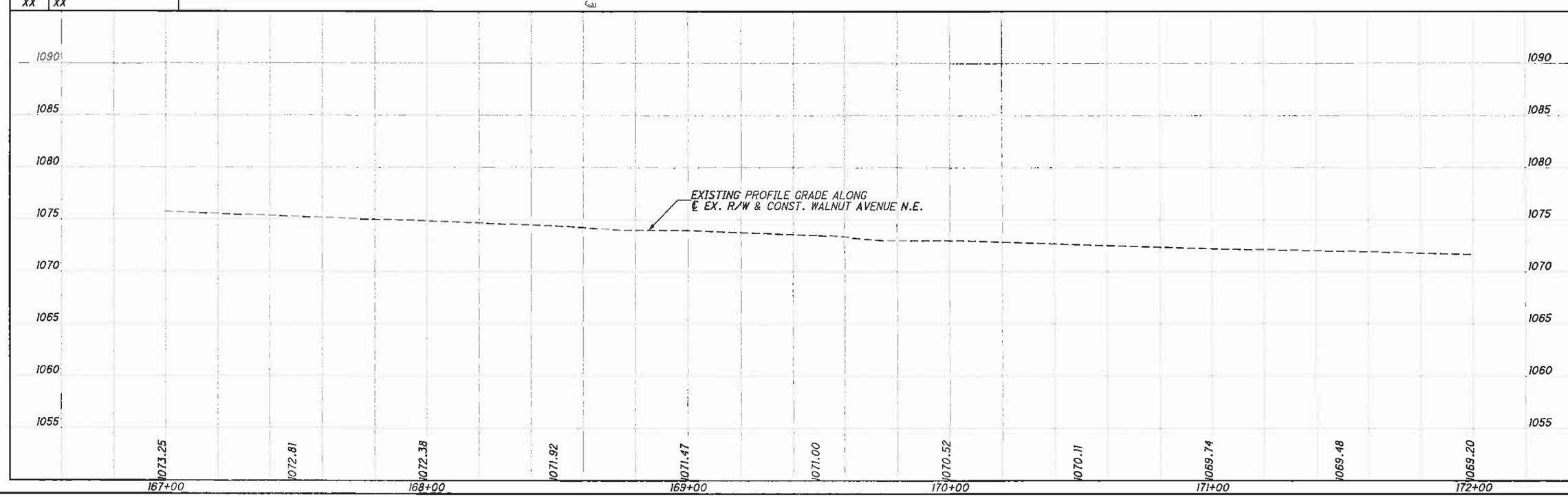

HORIZONTAL SCALE IN FEET 0 10 20 40

CALCULATED JMK
CHECKED WLC

PLAN AND PROFILE - WALNUT AVENUE
STA. 167+00 TO STA. 172+00

WALNUT & CHERRY
COMPLETE STREET
BIKE LANES

R:\Stark\SARTA\Task 3 Canton\STA\91592\roadway\sheets\91592GP003.dgn 6/28/2012 1:35:00 PM jroth

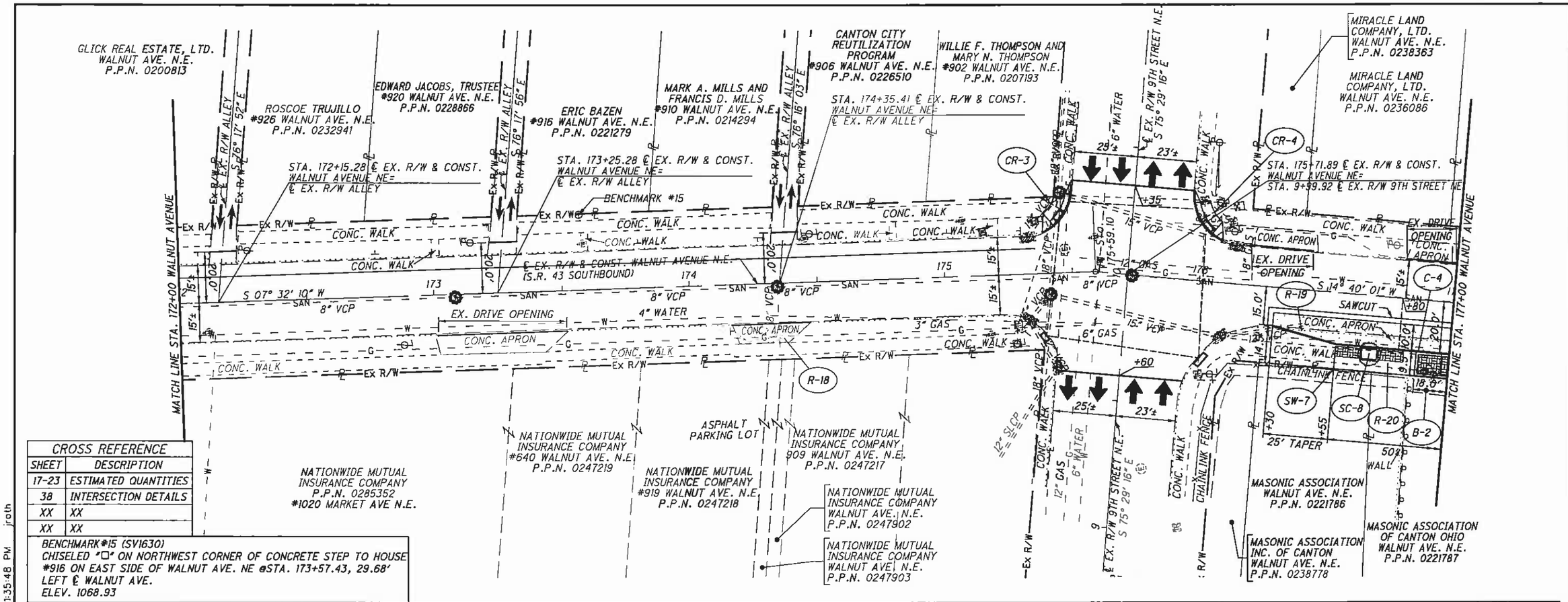

CROSS REFERENCE	
SHEET	DESCRIPTION
17-23	ESTIMATED QUANTITIES
38	INTERSECTION DETAILS
XX	XX
XX	XX

BENCHMARK #15 (SV1630)
CHISELED "□" ON NORTHWEST CORNER OF CONCRETE STEP TO HOUSE
#916 ON EAST SIDE OF WALNUT AVE. NE @STA. 173+57.43, 29.68'
LEFT ℄ WALNUT AVE.
ELEV. 1068.93

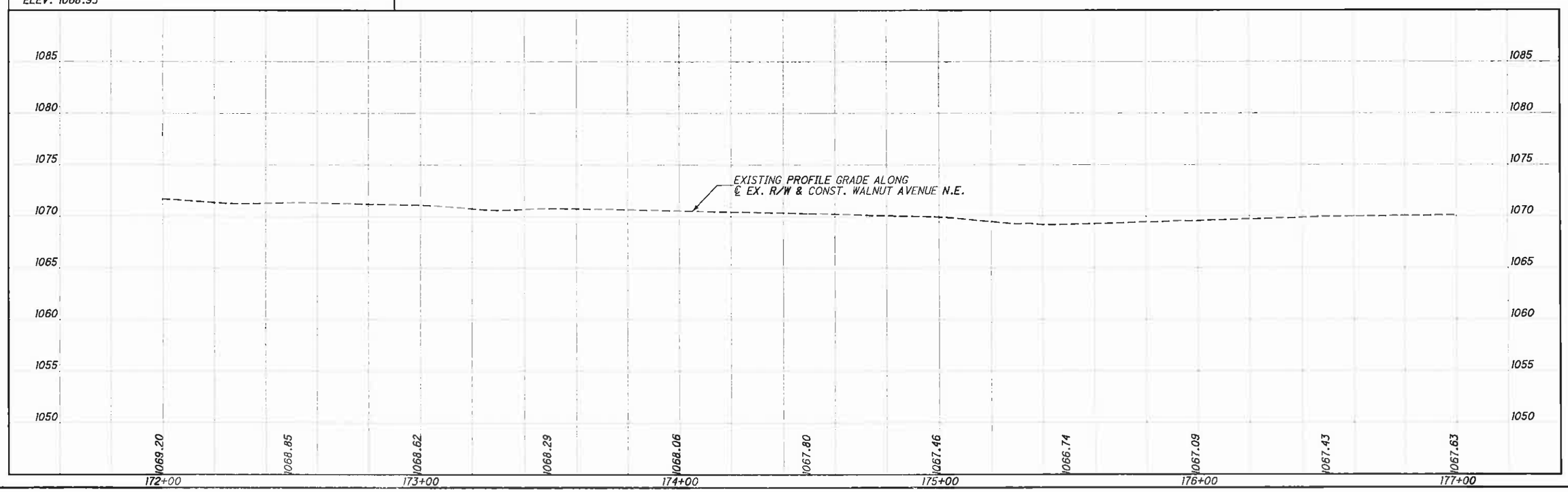

CALCULATED JMK
CHECKED WLC

HORIZONTAL SCALE IN FEET 0 10 20 40

PLAN AND PROFILE - WALNUT AVENUE
STA. 172+00 TO STA. 177+00

WALNUT & CHERRY
COMPLETE STREET
BIKE LANES

R:\Stark\SARTA\Task 3 Canton\STA\91592\roadway\sheets\91592GP004.dgn 6/28/2012 1:35:48 PM jroth

BENCHMARK #16 (SV5786)
CHISELED "□" ON NORTHEAST CORNER ON TOP OF WALL ON SOUTH PROPERTY LINE OF MASONIC TEMPLE WEST SIDE OF WALNUT AVE. NE @STA. 179+20.10, 29.81' RIGHT ℄ WALNUT AVE.
ELEV. 1071.86

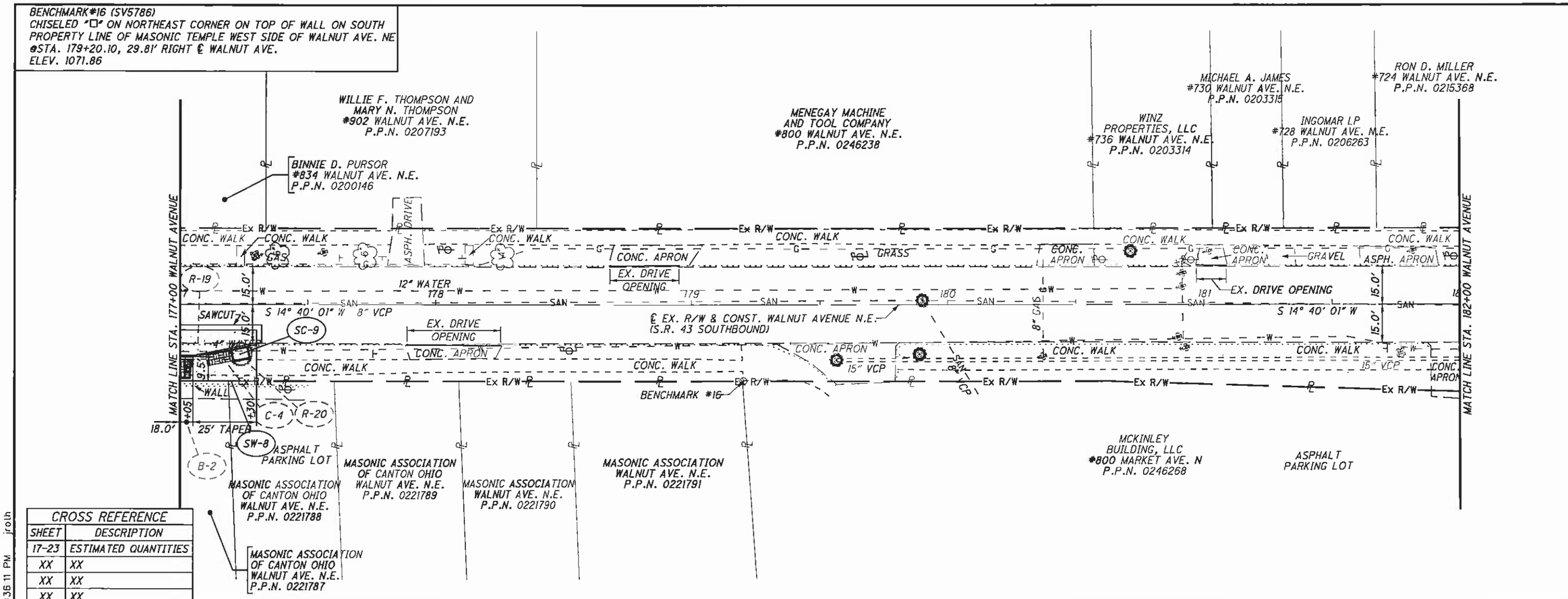

CROSS REFERENCE	
SHEET	DESCRIPTION
17-23	ESTIMATED QUANTITIES
XX	XX
XX	XX
XX	XX

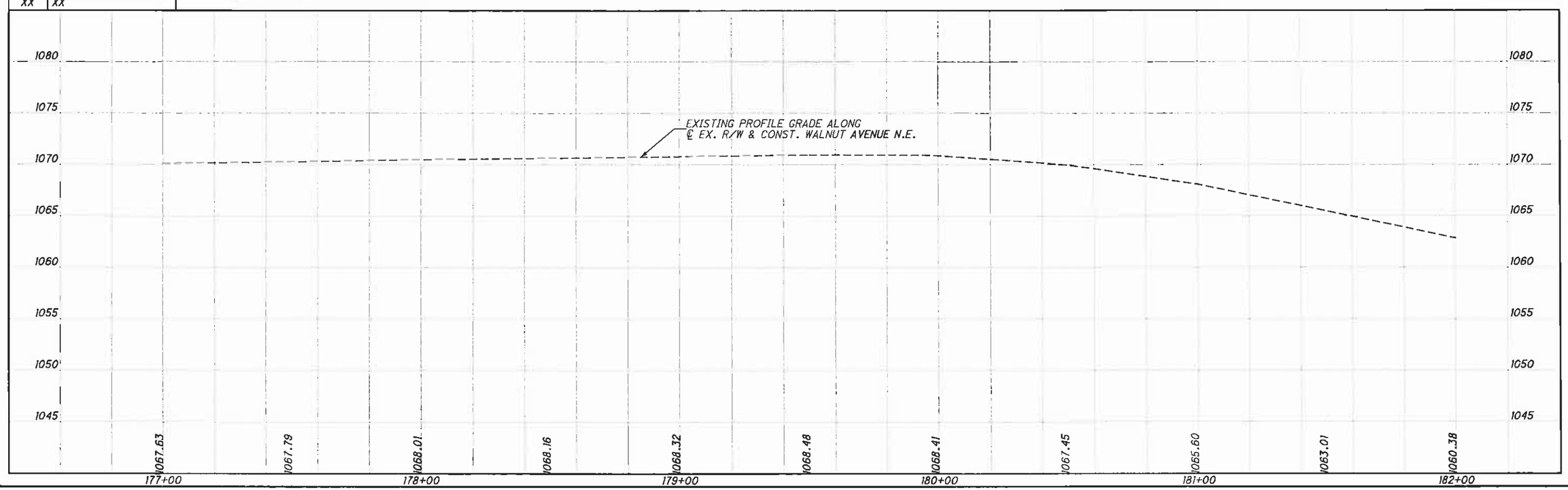

HORIZONTAL SCALE IN FEET 0 10 20 40

CALCULATED JMK
CHECKED WLC

PLAN AND PROFILE - WALNUT AVENUE
STA. 177+00 TO STA. 182+00

WALNUT & CHERRY COMPLETE STREET BIKE LANES

R:\Stark\SARTA\Task 3 Canton\STA\91592\roadway\sheets\91592GP005.dgn 6/28/2012 1:36 11 PM jroth

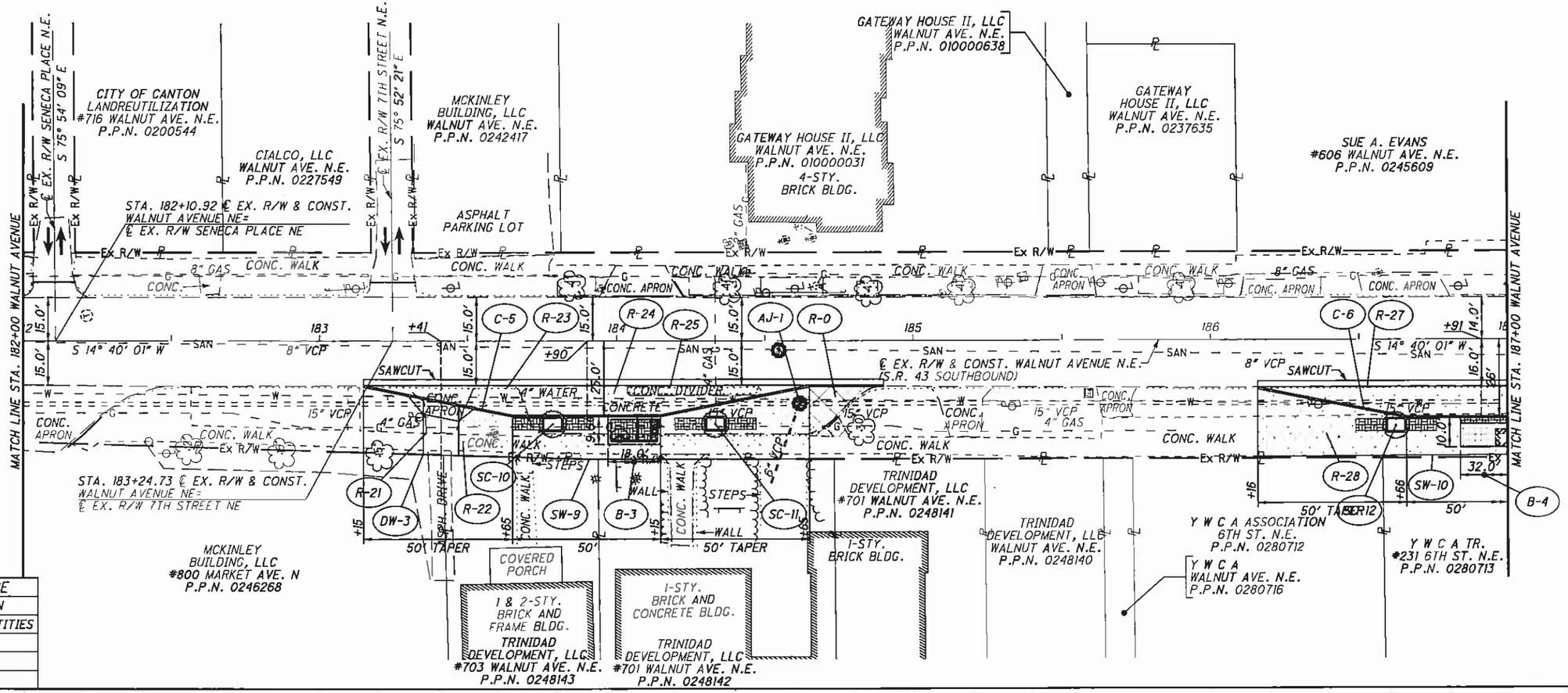

CROSS REFERENCE	
SHEET	DESCRIPTION
17-23	ESTIMATED QUANTITIES
43	DRIVE DETAILS
XX	XX
XX	XX

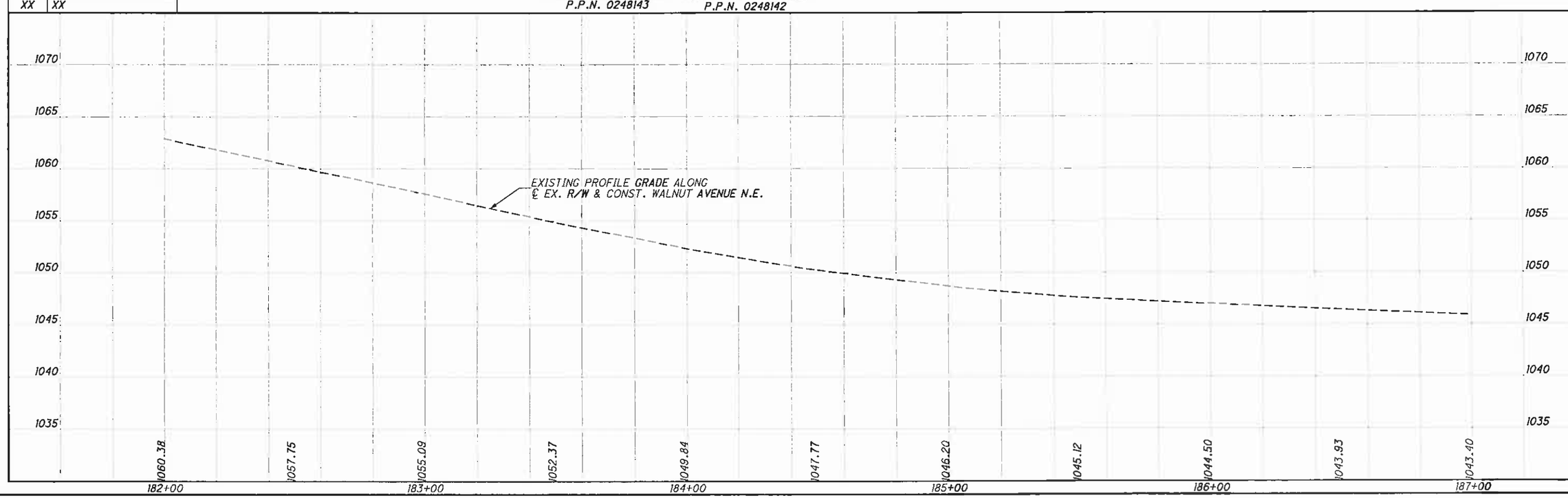

CALCULATED JMK
CHECKED WLC

HORIZONTAL SCALE IN FEET 0 10 20 40

PLAN AND PROFILE - WALNUT AVENUE
STA. 182+00 TO STA. 187+00

WALNUT & CHERRY COMPLETE STREET BIKE LANES

R:\Stark\SARTA\Task 3 Canton\STA\91592\roadway\sheets\91592GP006.dgn 6/28/2012 1:37:00 PM jroth

BENCHMARK#17 (SV627)
CHISELED "□" ON NORTHEAST CORNER ON TOP OF CONCRETE CURB ON EAST SIDE OF YMCA AT NORTHWEST CORNER OF SIXTH ST. NE AND WALNUT AVE. NE. @STA. 187+64.39, 39.04' RIGHT ℄ WALNUT AVE.
ELEV. 1043.43

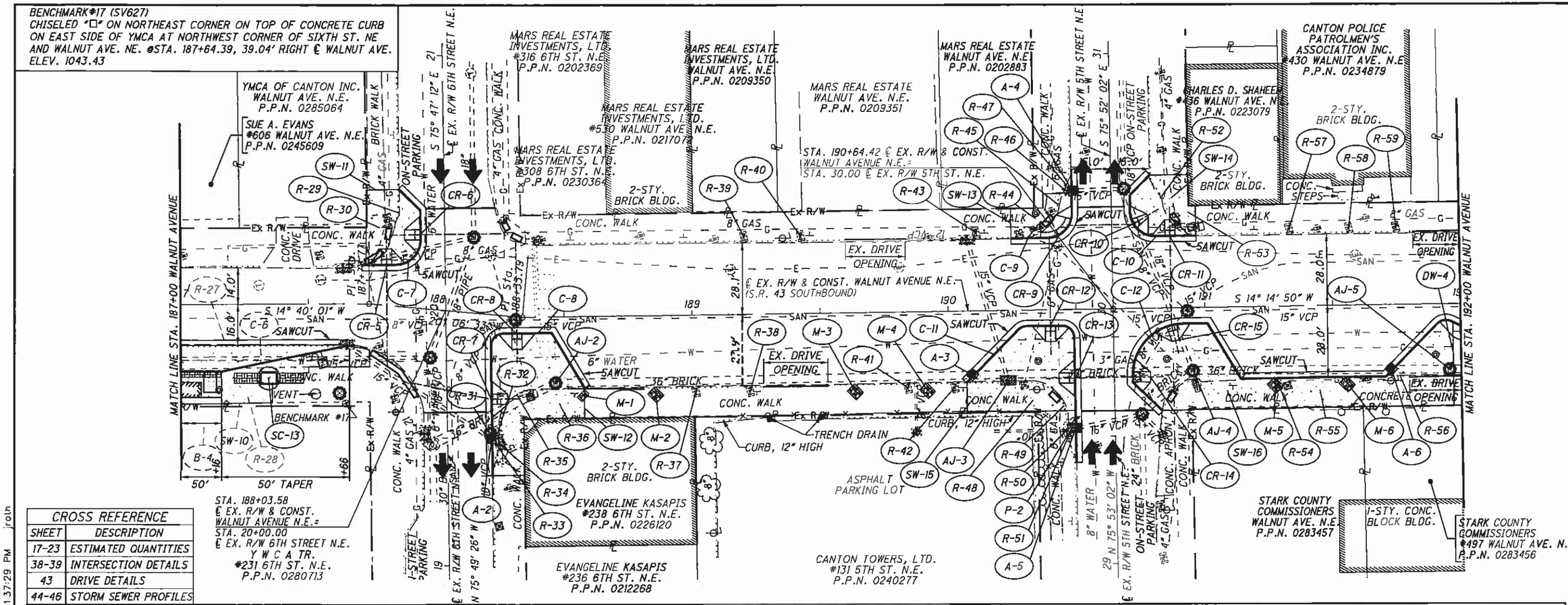

CROSS REFERENCE	
SHEET	DESCRIPTION
17-23	ESTIMATED QUANTITIES
38-39	INTERSECTION DETAILS
43	DRIVE DETAILS
44-46	STORM SEWER PROFILES

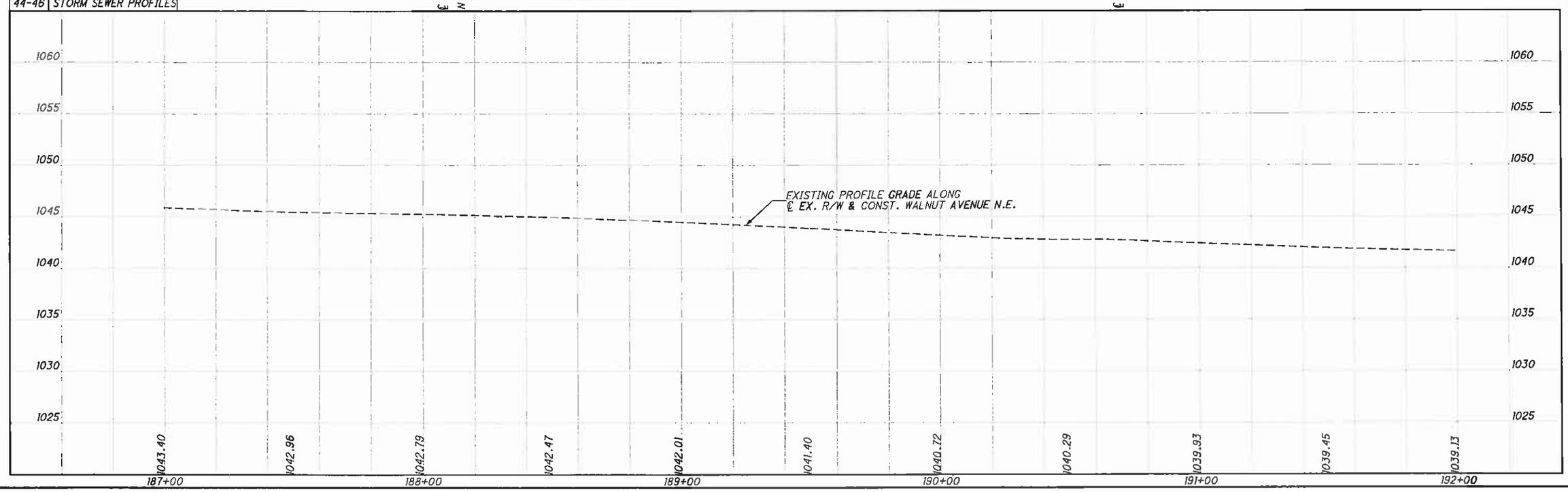

CALCULATED JMK
CHECKED WLC

PLAN AND PROFILE - WALNUT AVENUE
STA. 187+00 TO STA. 192+00

WALNUT & CHERRY COMPLETE STREET BIKE LANES

R:\Stark\SARTA\Task 3 Canton\STA\91592\roadway\sheets\91592GP007.dgn 6/28/2012 1:37:29 PM jroth

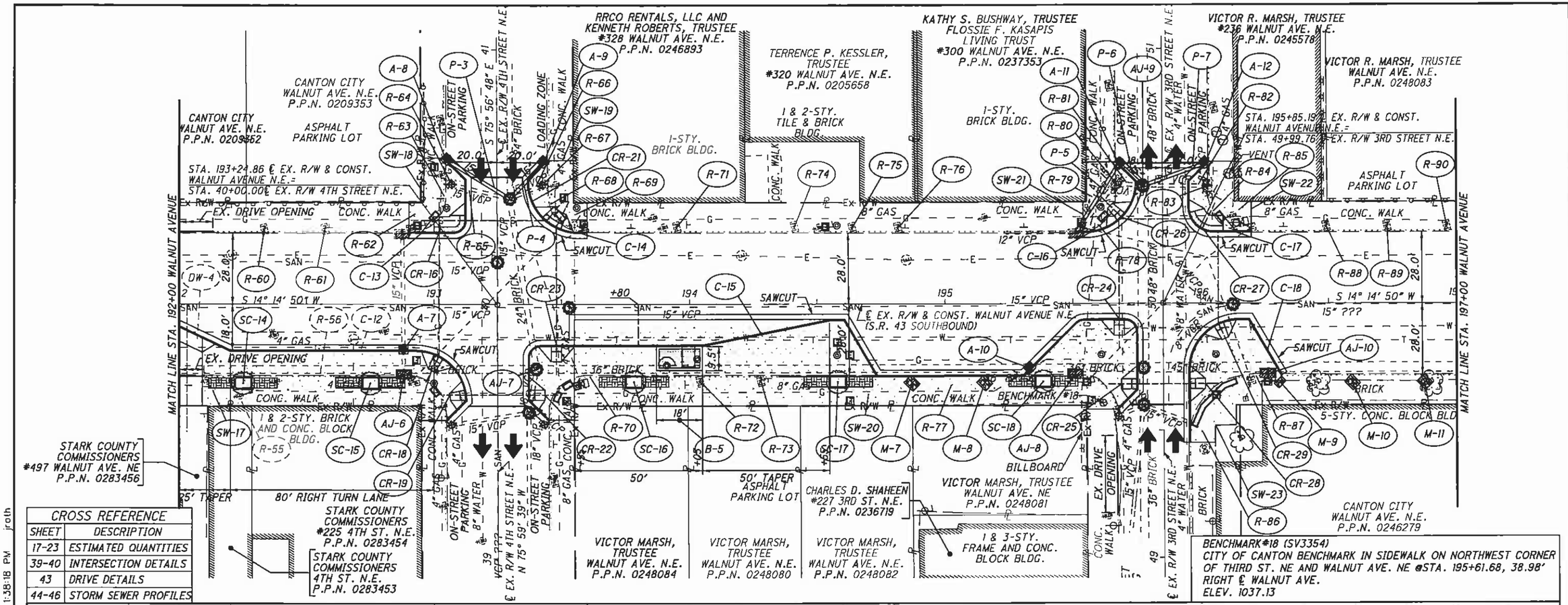

CROSS REFERENCE	
SHEET	DESCRIPTION
17-23	ESTIMATED QUANTITIES
39-40	INTERSECTION DETAILS
43	DRIVE DETAILS
44-46	STORM SEWER PROFILES

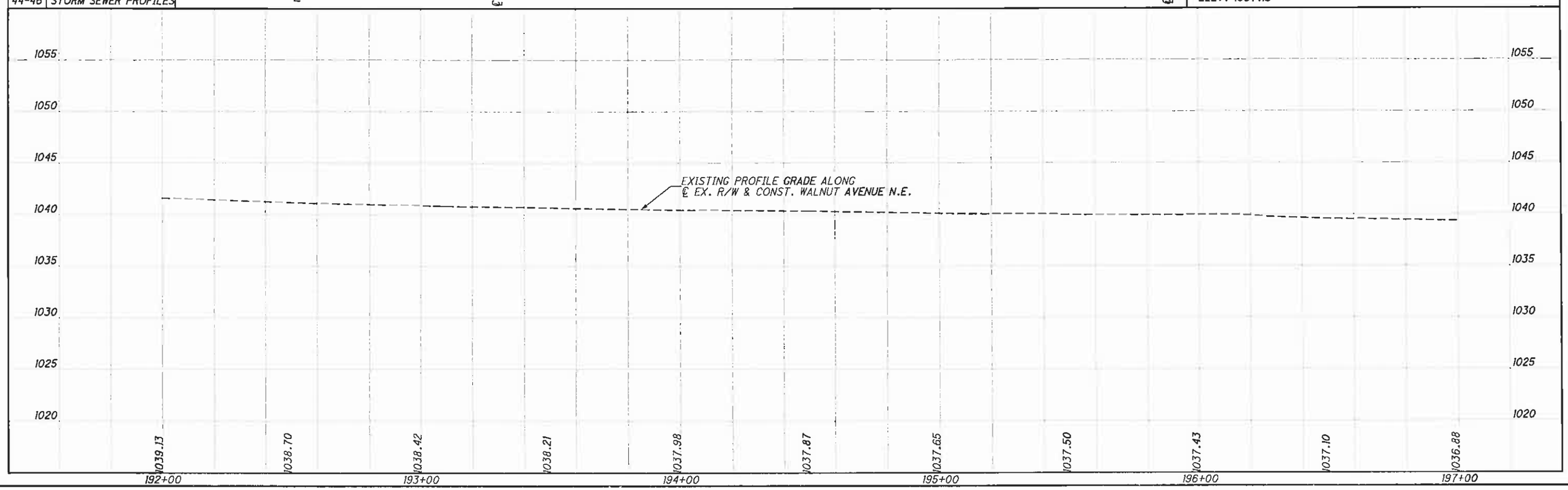

HORIZONTAL SCALE IN FEET 0 10 20 40

CALCULATED JMK
CHECKED WLC

PLAN AND PROFILE - WALNUT AVENUE
STA. 192+00 TO STA. 197+00

WALNUT & CHERRY COMPLETE STREET BIKE LANES

R:\Stark\SARTA\Task 3 Canton\STA\91592\roadway\sheets\91592GPD08.dgn 6/28/2012 1:38:18 PM jroth

BENCHMARK #19 (SV4081)
CHISELED "□" ON CORNER OF SIDEWALK ON SOUTHEAST CORNER OF TUSCARAWAS @STA. 201+56.60, 40.11' LEFT ℄ WALNUT AVE.
ELEV. 1037.55

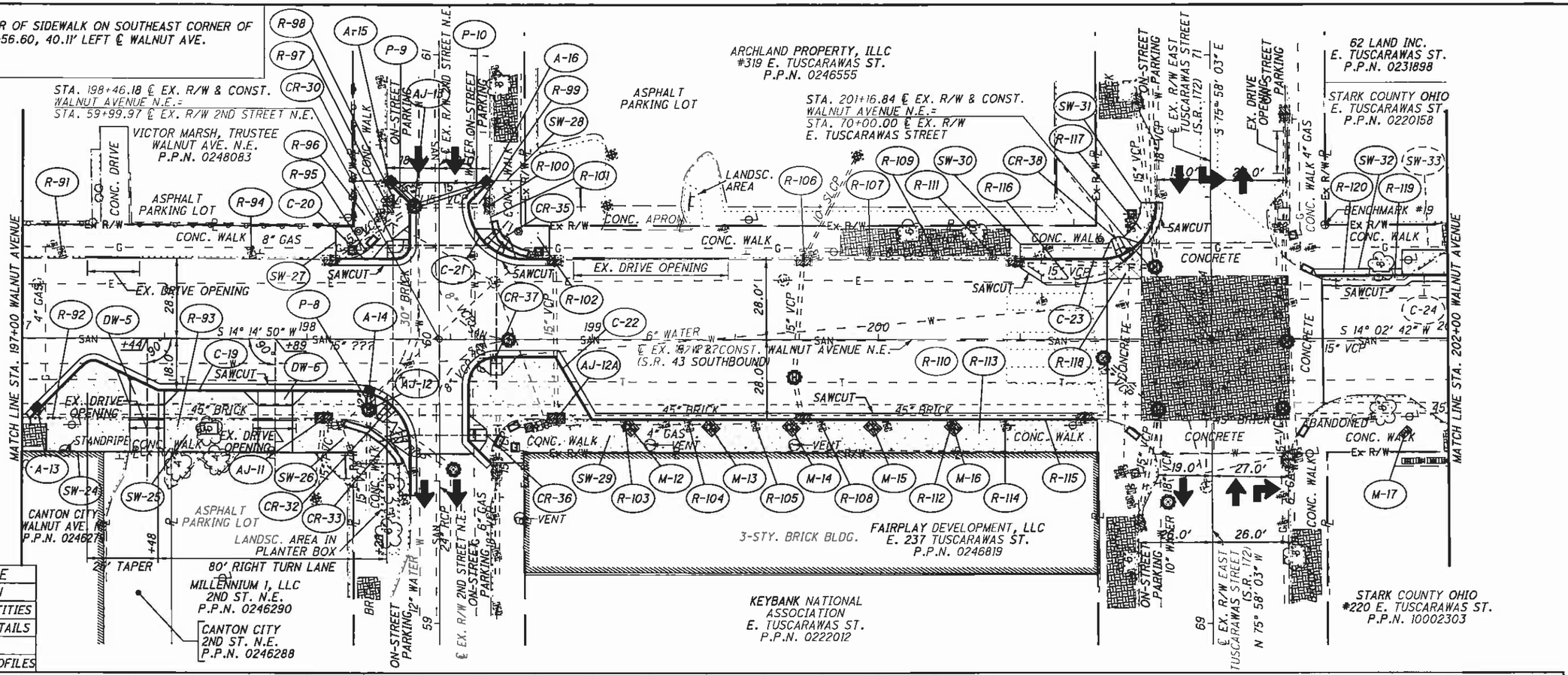

CROSS REFERENCE	
SHEET	DESCRIPTION
17-23	ESTIMATED QUANTITIES
40-41	INTERSECTION DETAILS
43	DRIVE DETAILS
44-46	STORM SEWER PROFILES

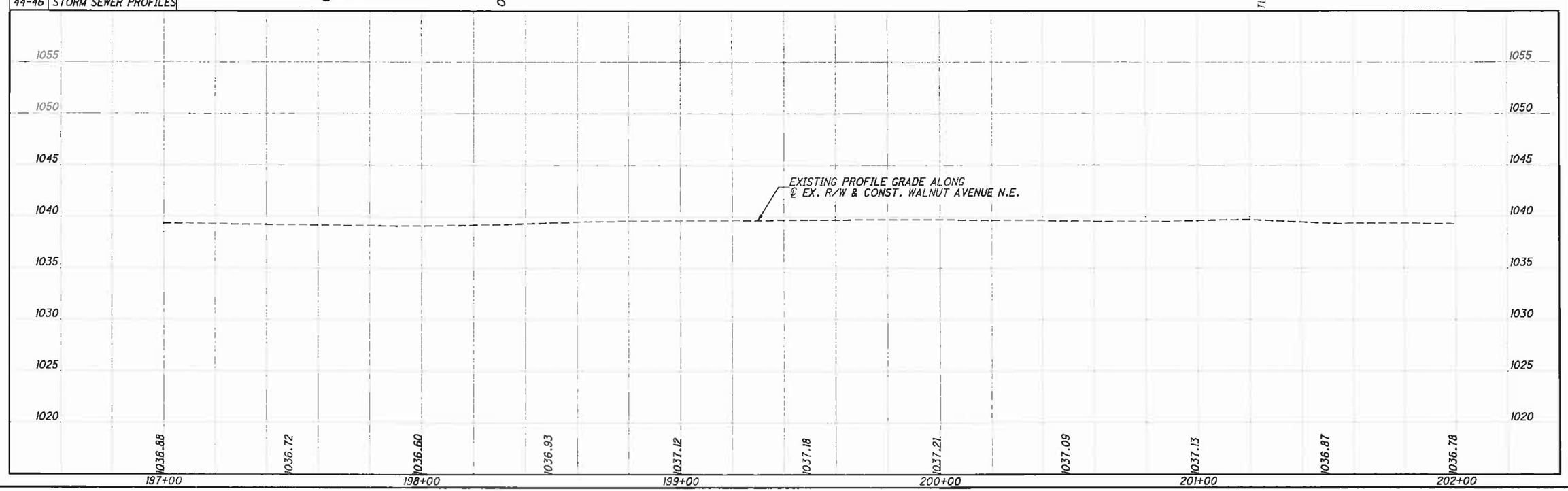

CALCULATED JMK
CHECKED WLC
HORIZONTAL SCALE IN FEET 0 10 20 40

PLAN AND PROFILE - WALNUT AVENUE
STA. 197+00 TO STA. 202+00

WALNUT & CHERRY COMPLETE STREET BIKE LANES

R:\Stark\SARTA\Task 3 Canton\STA\91592\roadway\sheets\91592GP009.dgn 6/28/2012 1:38:42 PM jroth

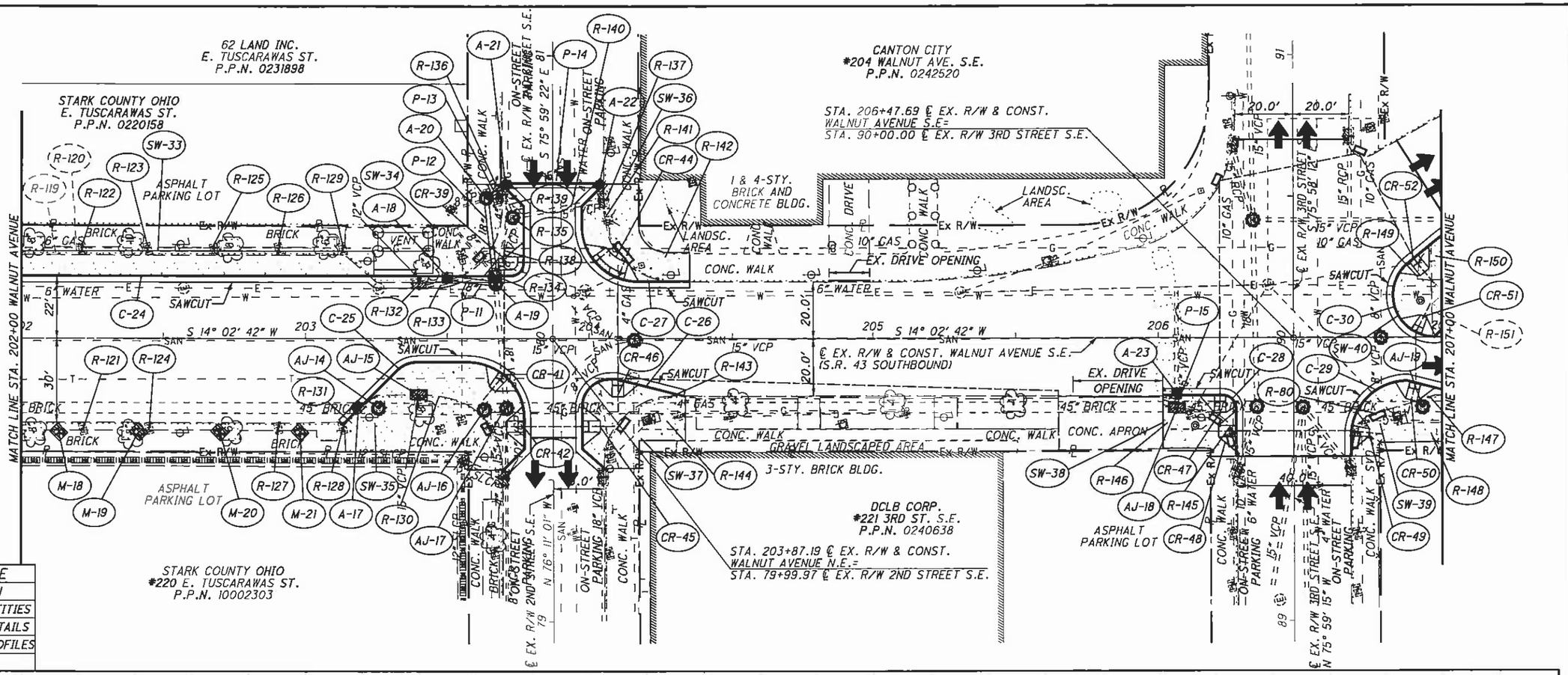

CROSS REFERENCE	
SHEET	DESCRIPTION
17-23	ESTIMATED QUANTITIES
41-42	INTERSECTION DETAILS
44-46	STORM SEWER PROFILES
XX	XX

R:\Stark\SARTA\Task 3 Canton\STA\91592\roadway\sheets\91592GPD10.dgn 6/28/2012 1:39:37 PM jroth

CALCULATED JMK/HEH
CHECKED WLC

HORIZONTAL SCALE IN FEET 0 10 20 40

PLAN AND PROFILE - WALNUT AVENUE STA. 202+00 TO STA. 207+00

WALNUT & CHERRY COMPLETE STREET BIKE LANES

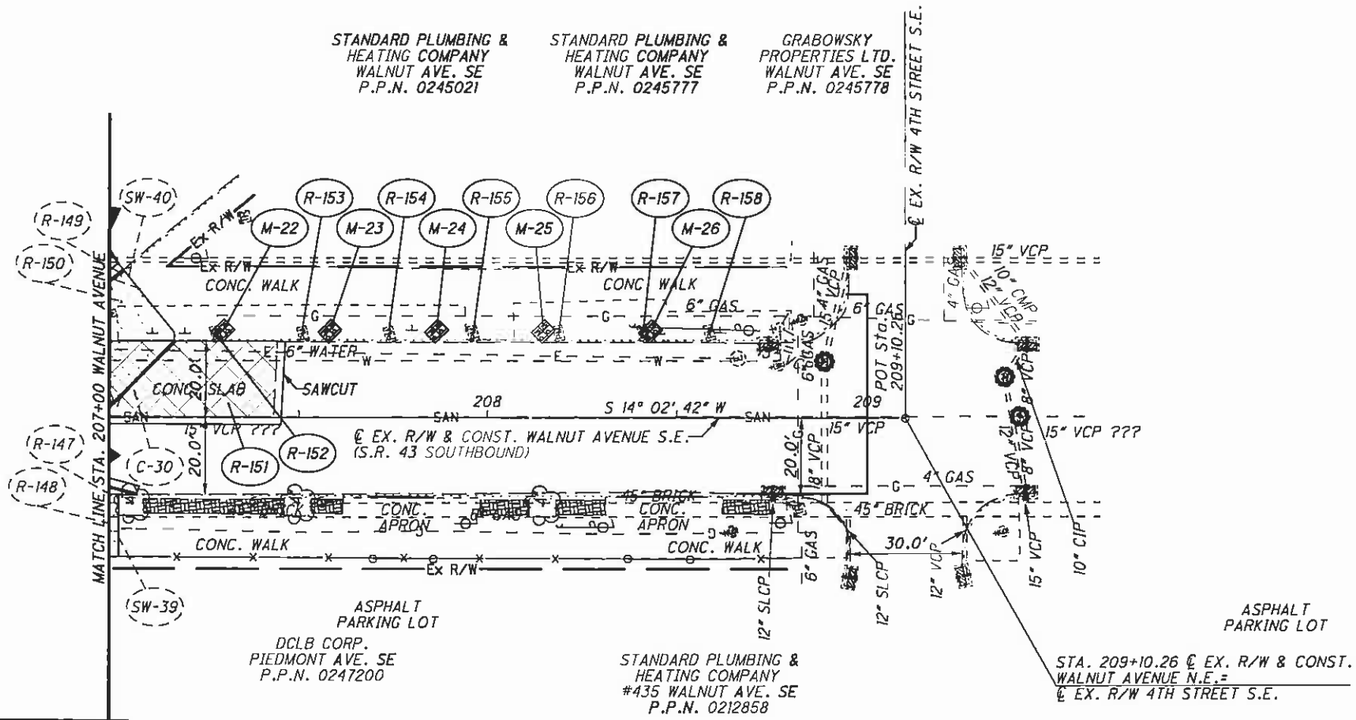

CROSS REFERENCE	
SHEET	DESCRIPTION
17-23	ESTIMATED QUANTITIES
42	INTERSECTION DETAILS
44-46	STORM SEWER PROFILES
XX	XX

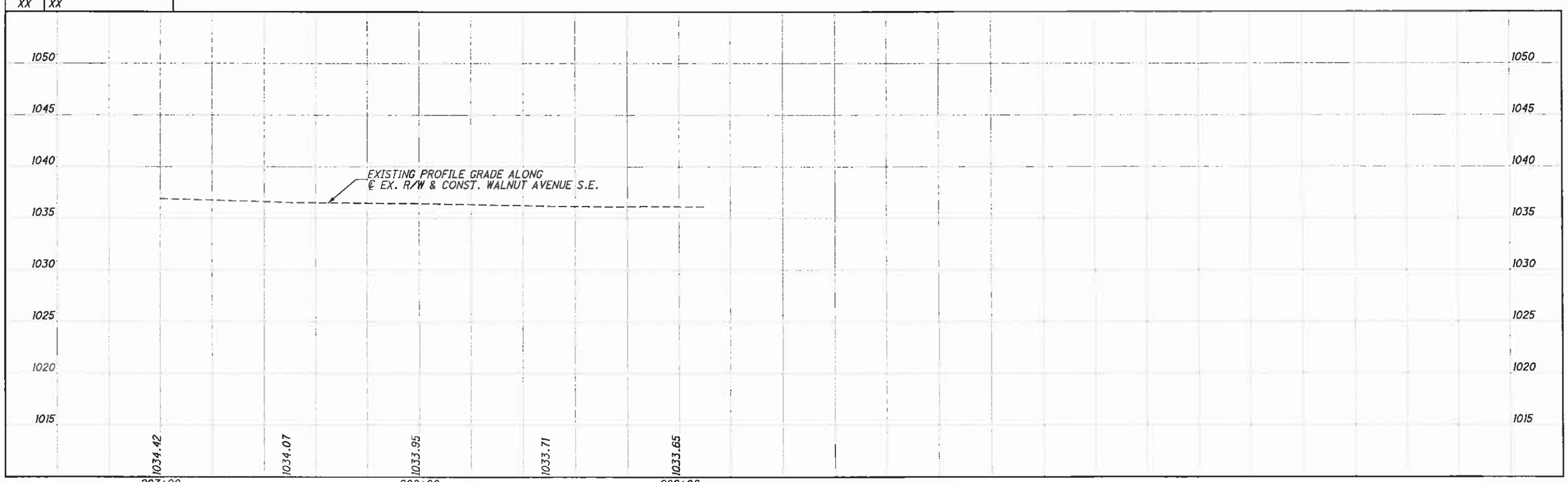

HORIZONTAL SCALE IN FEET 0 10 20 40

CALCULATED JMK
CHECKED WLC

PLAN AND PROFILE - WALNUT AVENUE
STA. 207+00 TO STA. 209+10.26

WALNUT & CHERRY COMPLETE STREET BIKE LANES

R:\Stark\SARTA\Task 3 Canton\STA\91592\roadway\sheets\91592GP011.dgn 6/28/2012 1:40:14 PM jroth

BENCHMARK #20 (SV5350)
CHISELED "□" ON CONCRETE SIDEWALK AT NORTHEAST CORNER OF CHERRY AVE. NE AND FOURTH ST. NE @STA. 135+92.04, 30.66' RIGHT ℄ WALNUT AVE.
ELEV. 1038.46

BENCHMARK #21 (SV5457)
CHISELED "□" ON TOP OF BOLT SIGN BASE AT SOUTHEAST CORNER OF CHERRY AVE. NE AND SIXTH ST. NE @STA. 140+52.41, 40.15' RIGHT ℄ WALNUT AVE.
ELEV. 1040.59

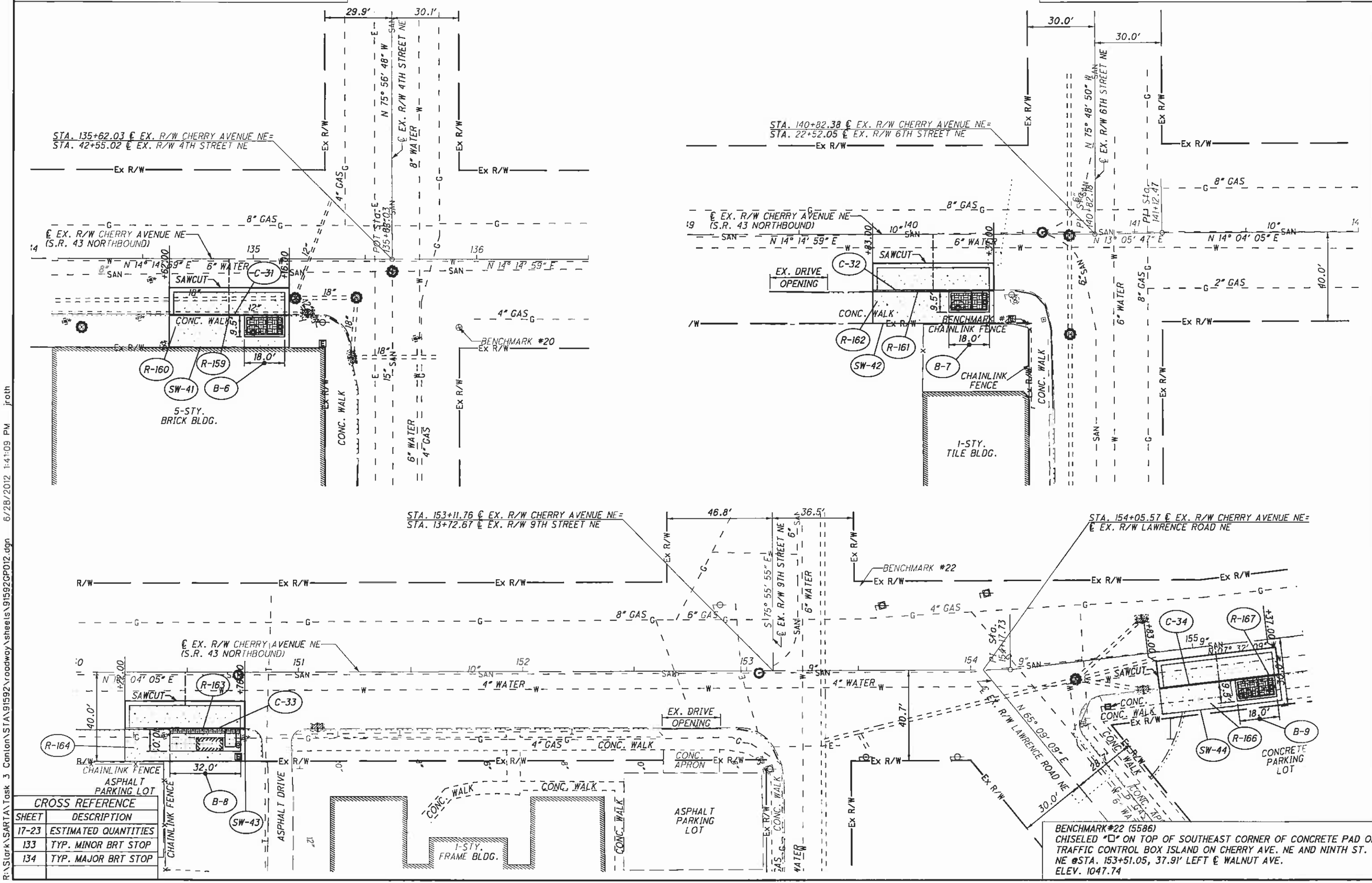

CROSS REFERENCE	
SHEET	DESCRIPTION
17-23	ESTIMATED QUANTITIES
133	TYP. MINOR BRT STOP
134	TYP. MAJOR BRT STOP

BENCHMARK #22 (5586)
CHISELED "□" ON TOP OF SOUTHEAST CORNER OF CONCRETE PAD OF TRAFFIC CONTROL BOX ISLAND ON CHERRY AVE. NE AND NINTH ST. NE @STA. 153+51.05, 37.91' LEFT ℄ WALNUT AVE.
ELEV. 1047.74

HORIZONTAL SCALE IN FEET 0 10 20 40

CALCULATED JMK
CHECKED WLC

PLAN - CHERRY AVENUE BUS SHELTER/STOP LOCATIONS

WALNUT & CHERRY COMPLETE STREET BIKE LANES

R:\Stark\SARTA\Task 3 Canton\STA\91592\roadway\sheets\915920P012.dgn 6/28/2012 1:41:09 PM jroth

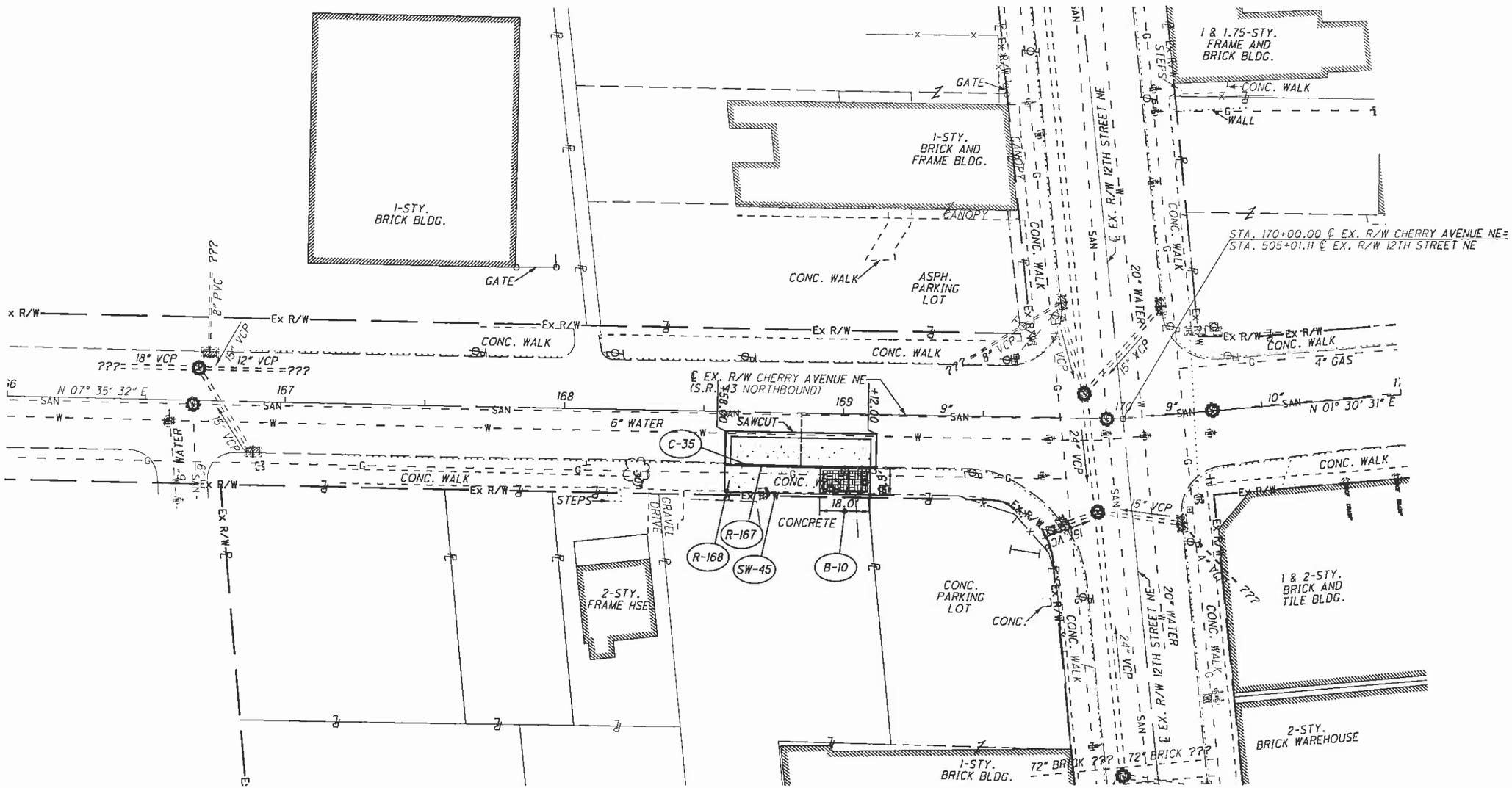

CROSS REFERENCE	
SHEET	DESCRIPTION
17-23	ESTIMATED QUANTITIES
133	TYP. MINOR BRT STOP
134	TYP. MAJOR BRT STOP
XX	XX

HORIZONTAL SCALE IN FEET 0 10 20 40

CALCULATED JMK
CHECKED WLC

PLAN - CHERRY AVENUE BUS SHELTER/STOP LOCATIONS

WALNUT & CHERRY COMPLETE STREET BIKE LANES

R:\Stark\SARTA\Task 3 Canton\STA\91592\roadway\sheets\91592GP013.dgn 6/28/2012 1:41:37 PM jroth

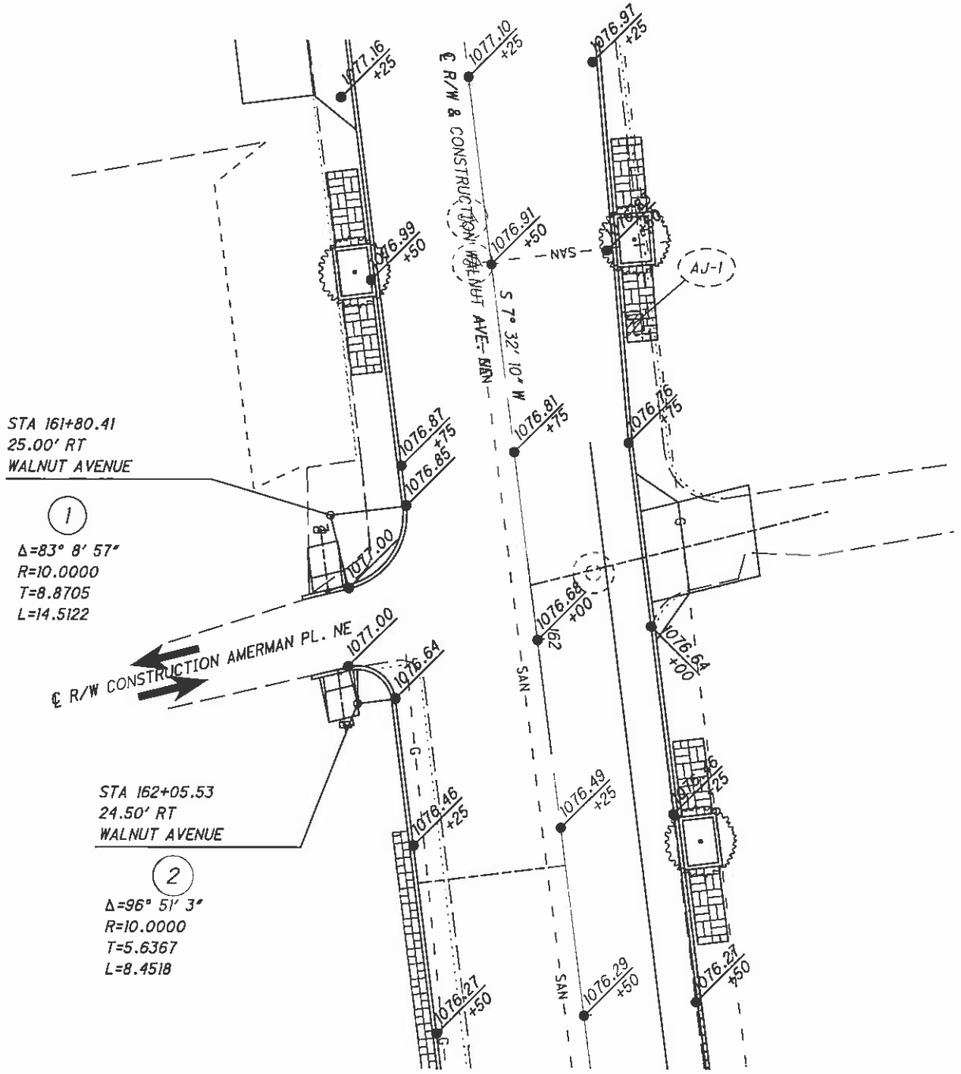

NOTES
* ALL ELEVATIONS ALONG THE CURB ARE BOTTOM OF CURB ELEVATIONS.

HORIZONTAL SCALE IN FEET 0 5 10 20

CALCULATED CJP
CHECKED WLC

INTERSECTION DETAILS
WALNUT AVE./ AMERMAN PL.

WALNUT & CHERRY COMPLETE STREET BIKE LANES

R:\Stark\SARTA\Task 3 Canton\STA\91592\roadway\sheets\91592GI001.dgn 6/28/2012 2:01:46 PM jroth

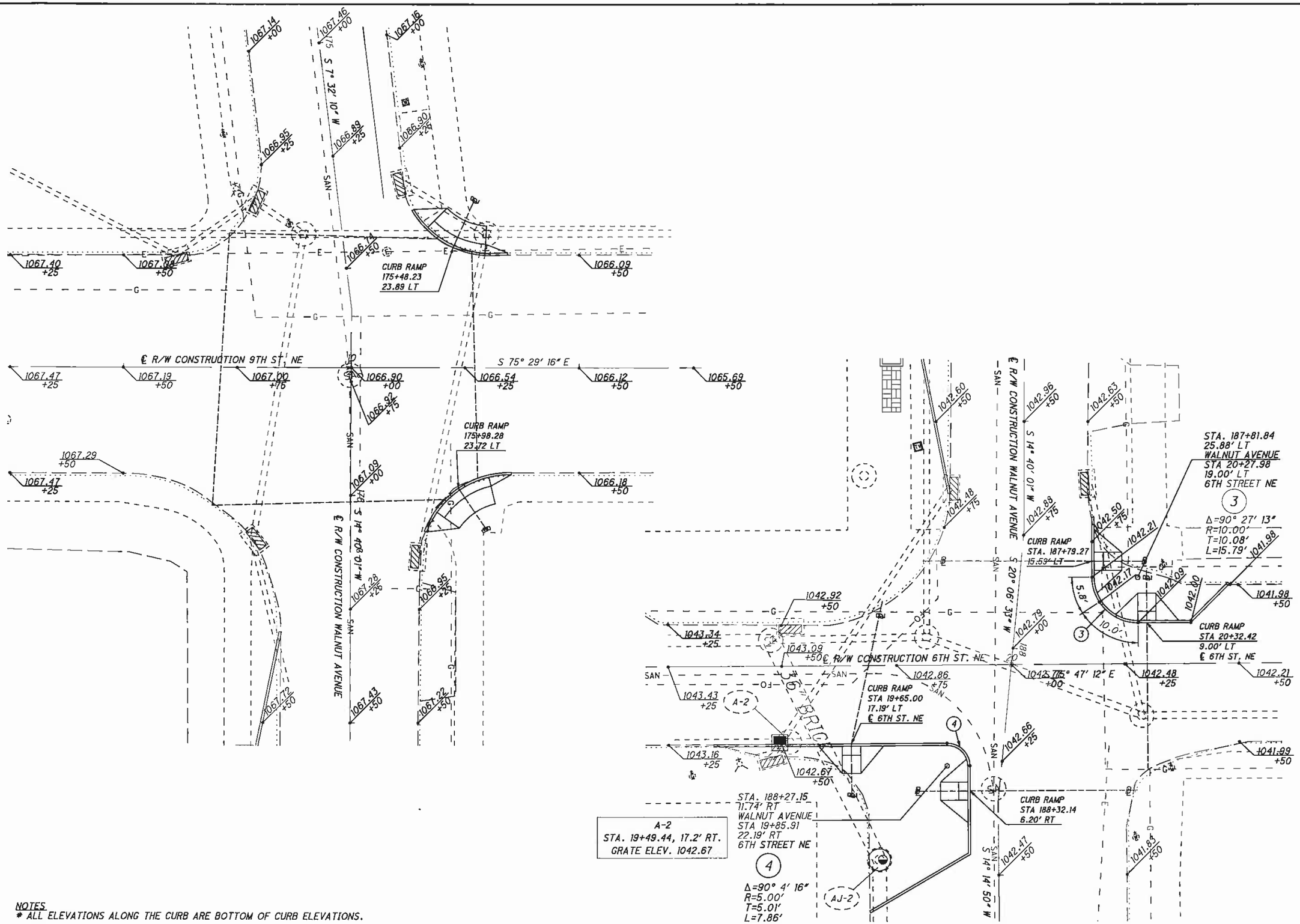

NOTES
* ALL ELEVATIONS ALONG THE CURB ARE BOTTOM OF CURB ELEVATIONS.

HORIZONTAL SCALE IN FEET 0 5 10 20

CALCULATED CJP
CHECKED WLC

INTERSECTION DETAILS

WALNUT AVE./9TH ST. NE & WALNUT AVE./6TH ST. NE

WALNUT & CHERRY
COMPLETE STREET
BIKE LANES

R:\Stark\SART\Task 3 Canton\STA\91592\roadway\sheets\91592GI002.dgn 6/28/2012 2:02:54 PM jroth

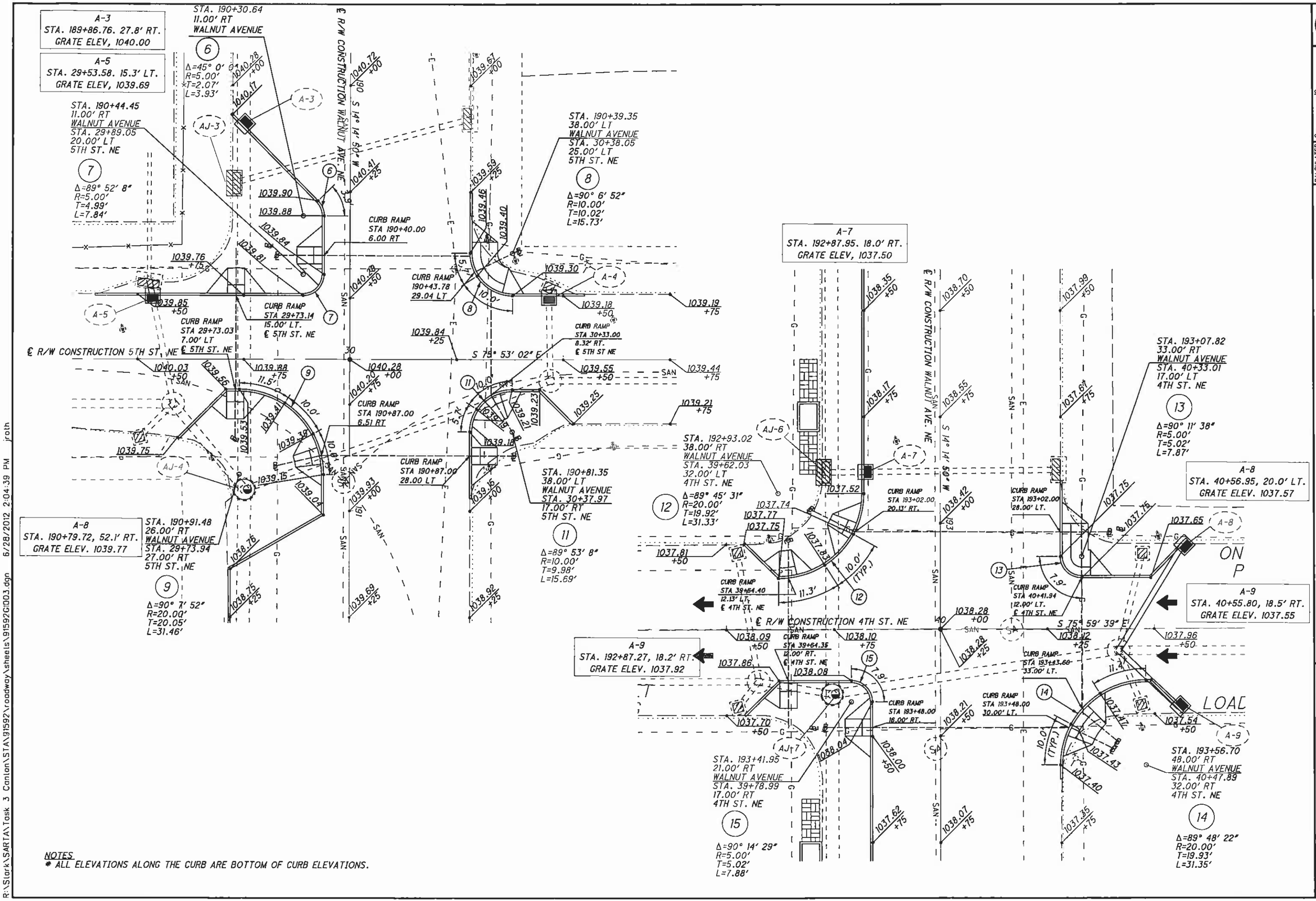

NOTES
* ALL ELEVATIONS ALONG THE CURB ARE BOTTOM OF CURB ELEVATIONS.

CALCULATED CJP
CHECKED WLC

INTERSECTION DETAILS
WALNUT AVE./5TH ST. NE & WALNUT AVE./4TH ST. NE

WALNUT & CHERRY COMPLETE STREET BIKE LANES

R:\Stark\SARTA\Task 3 Canton\STA91592\roadway\sheets\91592GI003.dgn 6/28/2012 2:04:39 PM jroth

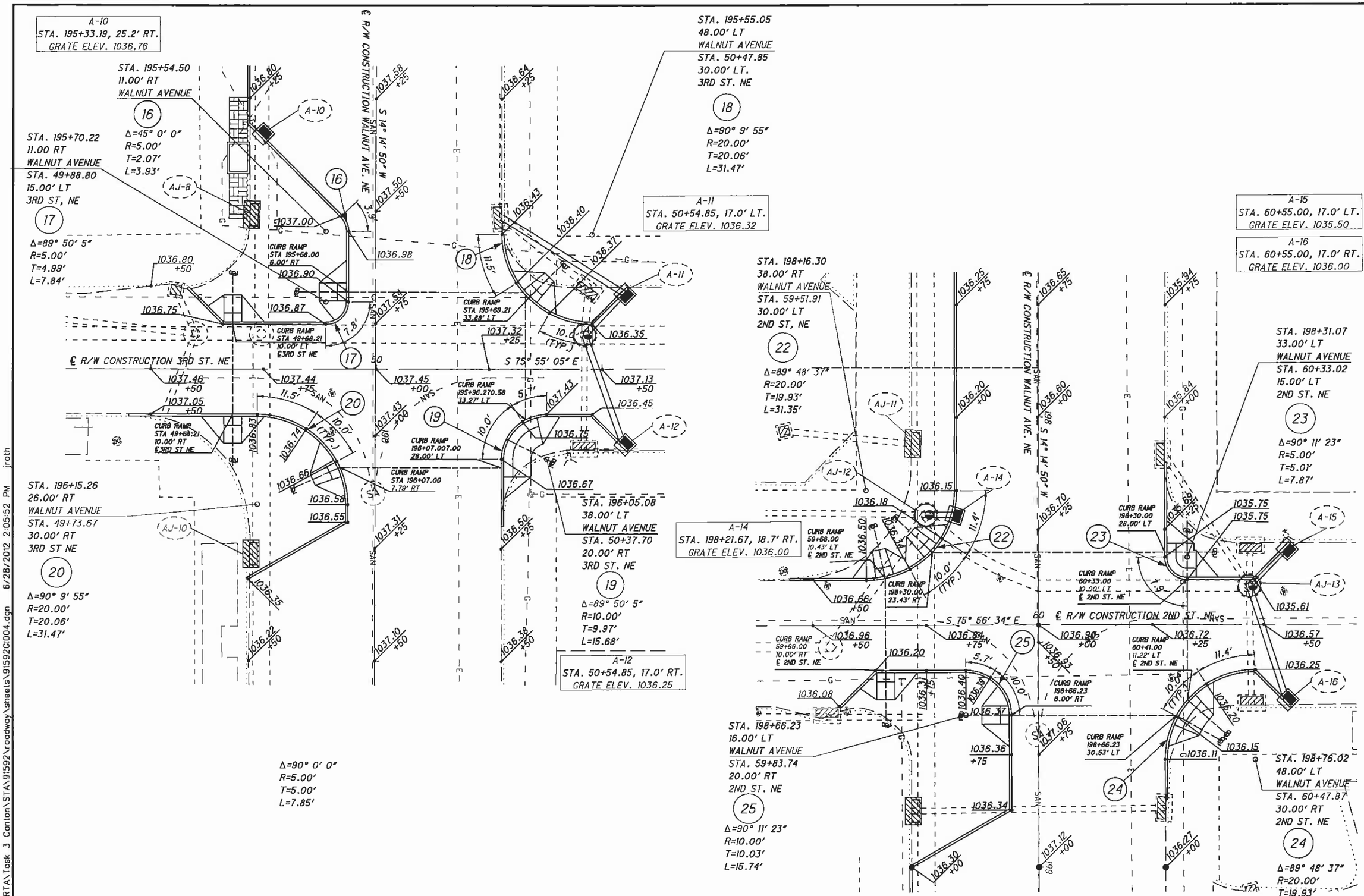

NOTES
* ALL ELEVATIONS ALONG THE CURB ARE BOTTOM OF CURB ELEVATIONS.

HORIZONTAL SCALE IN FEET 0 5 10 20

CALCULATED CJP
CHECKED WLC

INTERSECTION DETAILS
WALNUT AVE./3RD ST. NE & WALNUT AVE./2ND ST. NE

WALNUT & CHERRY COMPLETE STREET BIKE LANES

R:\Stark\SARTA\Task 3 Canton\STA\91592\roadway\sheets\91592GI004.dgn 6/28/2012 2:05:52 PM jroth

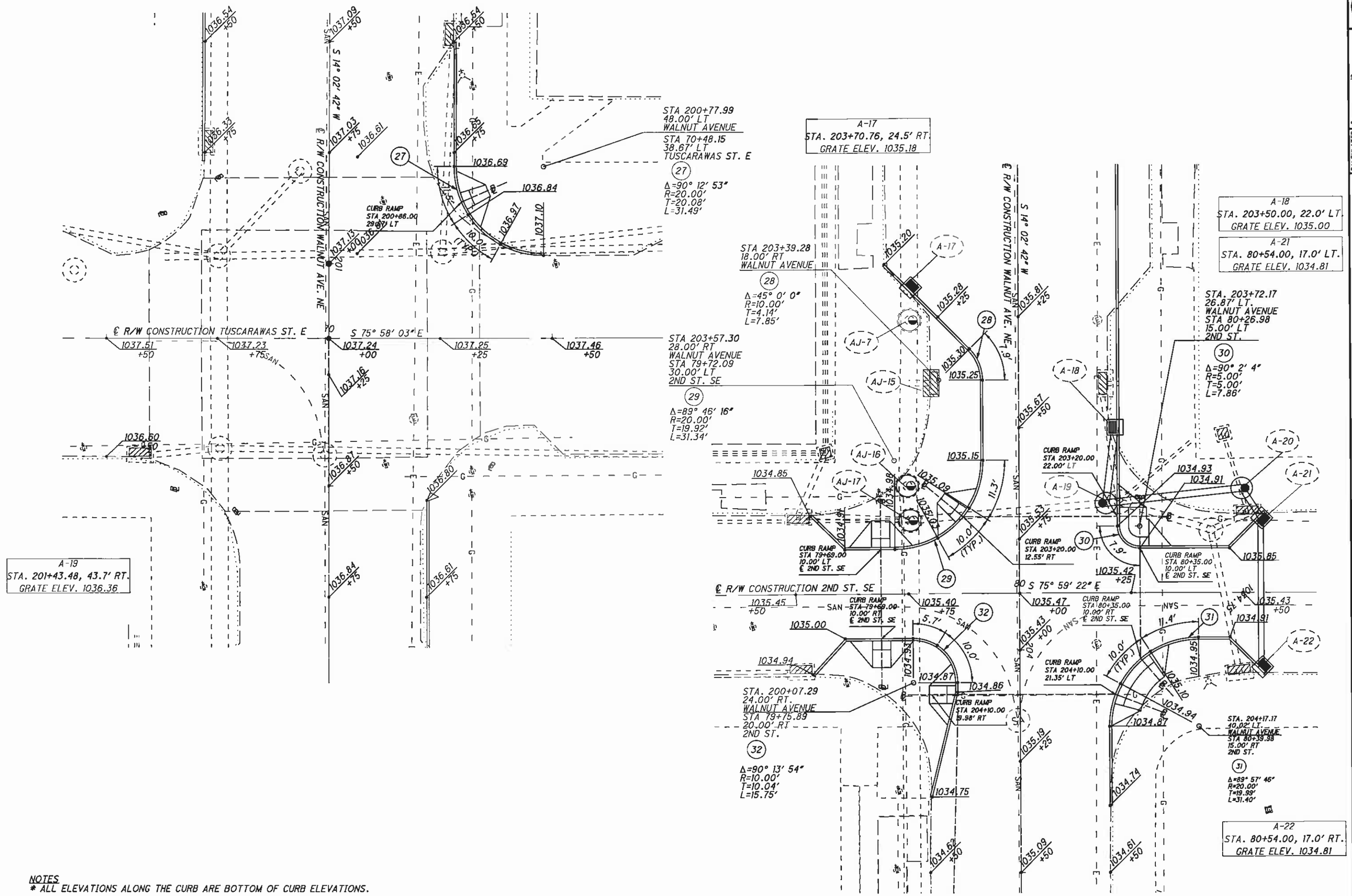

NOTES
* ALL ELEVATIONS ALONG THE CURB ARE BOTTOM OF CURB ELEVATIONS.

HORIZONTAL SCALE IN FEET 0 5 10 20

CALCULATED CJP
CHECKED WLC

INTERSECTION DETAILS
WALNUT AVE./E. TUSC.ST. & WALNUT AVE./2ND ST. SE

WALNUT & CHERRY COMPLETE STREET BIKE LANES

R:\Stark\SART\Task 3 Canton\STA\91592\roadway\sheets\91592GI005.dgn 6/28/2012 2:08:54 PM jroth

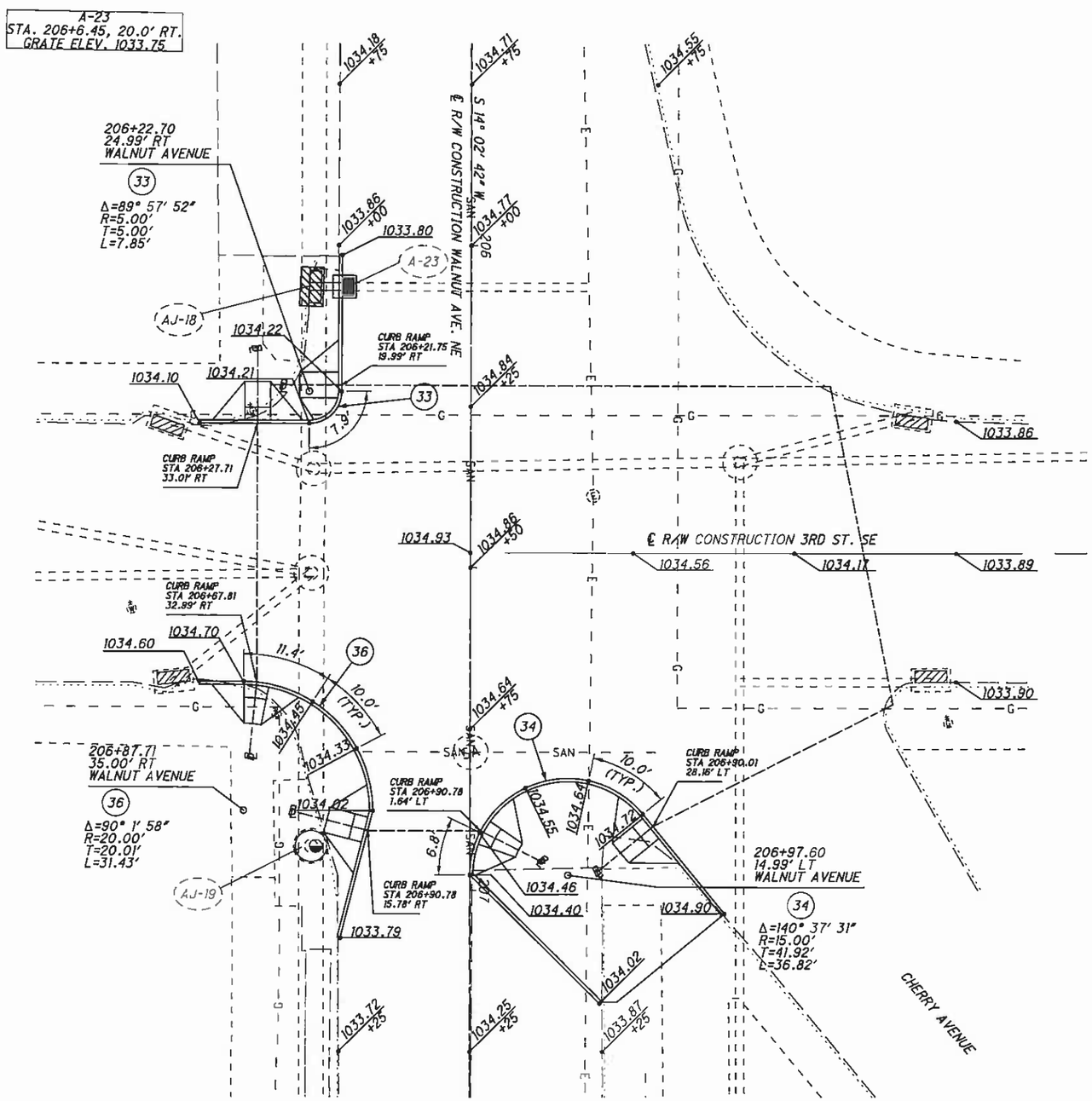

NOTES
* ALL ELEVATIONS ALONG THE CURB ARE BOTTOM OF CURB ELEVATIONS.

CALCULATED CJP
CHECKED WLC

HORIZONTAL SCALE IN FEET 0 5 10 20

INTERSECTION DETAILS
WALNUT AVE./3RD ST. SE

WALNUT & CHERRY COMPLETE STREET BIKE LANES

R:\Stark\SARTA\Task 3 Canton\STA\91592\roadway\sheets\91592GI006.dgn 6/28/2012 2:10:00 PM jroth

PROPOSED LEGEND:

1. ITEM 204 - SUBGRADE COMPACTION
2. ITEM 304 - AGGREGATE BASE
3. ITEM 448 - ASPHALT CONCRETE SURFACE COURSE, TYPE 1, PG64-22 (DRIVEWAYS)
4. ITEM 452 - NON-REINFORCED CONCRETE PAVEMENT
5. ITEM 408 - PRIME COAT (.040 GAL/SY)

DRIVE PAVEMENT TYPES

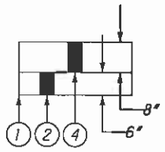

TYPE A RESIDENTIAL CONCRETE

DRIVEWAY PLAN VIEW (TYPICAL)

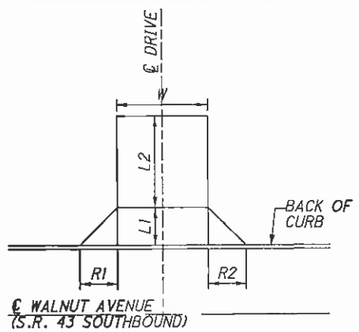

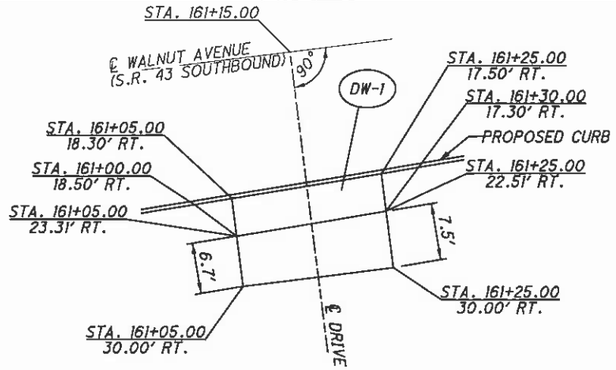

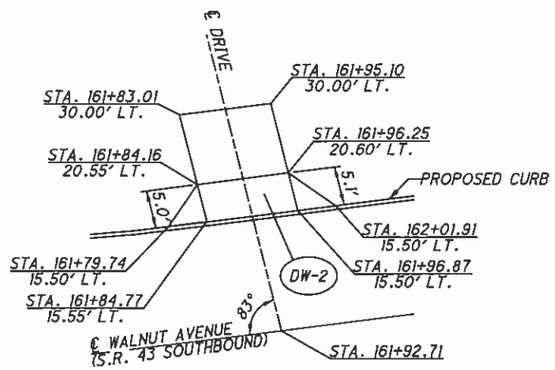

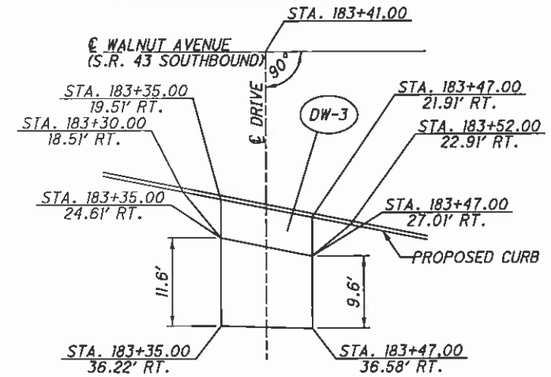

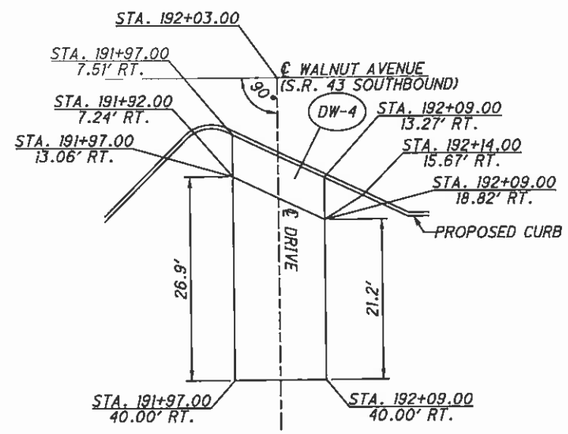

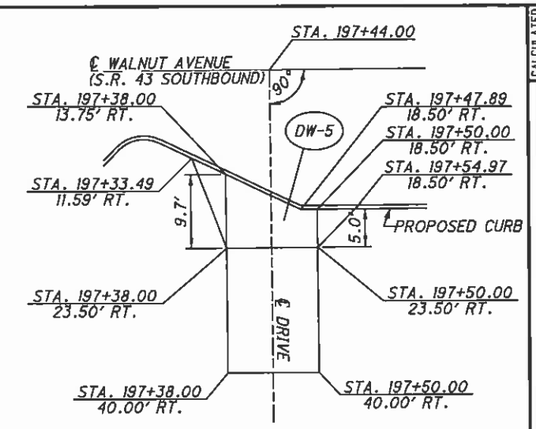

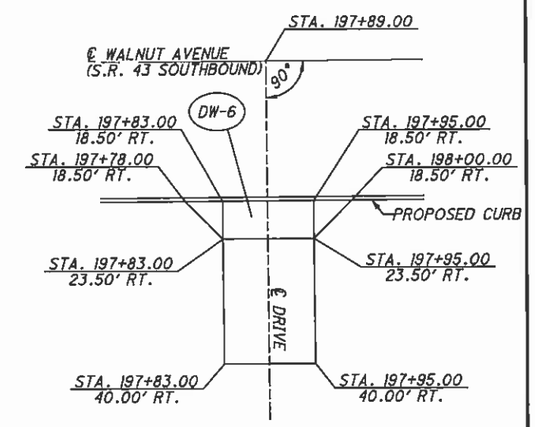

SHEET NO.	REFERENCE NO.	STATION	SIDE	DRIVE TYPE	DRIVE ANGLE	APRON LENGTH "L1"	DRIVEWAY LENGTH "L2"	WIDTH "W"	R1 (LEFT SIDE RADII OF DRIVE LOOKING FROM CL)	R2 (RIGHT SIDE RADII OF DRIVE LOOKING FROM CL)	CADD GENERATED SURFACE AREA	204 SUBGRADE COMPACTION	304 AGGREGATE BASE	452 8" NON-REINFORCED CONCRETE PAVEMENT
					DEG	FT	FT	FT	FT	FT	SQ FT	SQ YD	CU YD	SQ YD
24	DW-1	161+15	RT.	A	90°	5.0	7.1	20.0	5.0	5.0	266.93	29.7	4.9	29.7
24	DW-2	161+92.7	LT.	A	83°	5.1	9.5	12.0	5.0	5.0	200.84	22.3	3.7	22.3
29	DW-3	183+41	RT.	A	90°	5.1	10.6	12.0	5.0	5.0	213.81	23.8	4.0	23.8
30-31	DW-4	192+03	RT.	A	90°	5.5	24.1	12.0	5.0	5.0	385.32	42.8	7.1	42.8
32	DW-5	197+44	RT.	A	90°	6.9	16.5	12.0	5.0	5.0	315.86	35.1	5.8	35.1
32	DW-6	197+89	RT.	A	90°	5.0	16.5	12.0	5.0	5.0	283.00	31.4	5.2	31.4
TOTALS CARRIED TO GENERAL SUMMARY												185	31	185

CALCULATED JMK
CHECKED WLC

DRIVE DETAILS AND SUBSUMMARY

WALNUT & CHERRY COMPLETE STREET BIKE LANES

R:\Stark\SARTA\Task 3 Canton\STA\91592\roadway\sheets\91592GD001.dgn 6/28/2012 1:30:31 PM jroth

EX-1
STA. 188+03.31, 52.6' RT. ℄ WALNUT AVE.
COVER ELEV. = 1042.96
EX. 12" INV. (NE) = 1038.71±
EX. 18" INV. (E) = 1035.76±
EX. 30" INV. (W) = 1035.91±
EX. 36" INV. (SE) = 1035.96±

AJ-3
ITEM 604 - MANHOLE ADJUSTED TO GRADE
STA. 190+23.05, 27.8' RT. ℄ WALNUT AVE.
EX. COVER ELEV. = 1039.13±
PROP. COVER ELEV. = 1040.08
EX. 36" INV. (N&S) = 1033.43±

A-6
ITEM 604 - CATCH BASIN NO. 3A
STA. 191+72.78, 25.5' RT. ℄ WALNUT AVE.
COVER ELEV. = 1038.33
EX. 36" INV. (N&S) = 1032.21±

AJ-7
ITEM 604 - MANHOLE ADJUSTED TO GRADE
STA. 193+40.18, 25.5' RT. ℄ WALNUT AVE.
EX. COVER ELEV. = 1037.89±
PROP. COVER ELVEV. = 1038.44
EX. 18" INV. (NW) = 1031.69±
EX. 36" INV. (SE) = 1030.89±

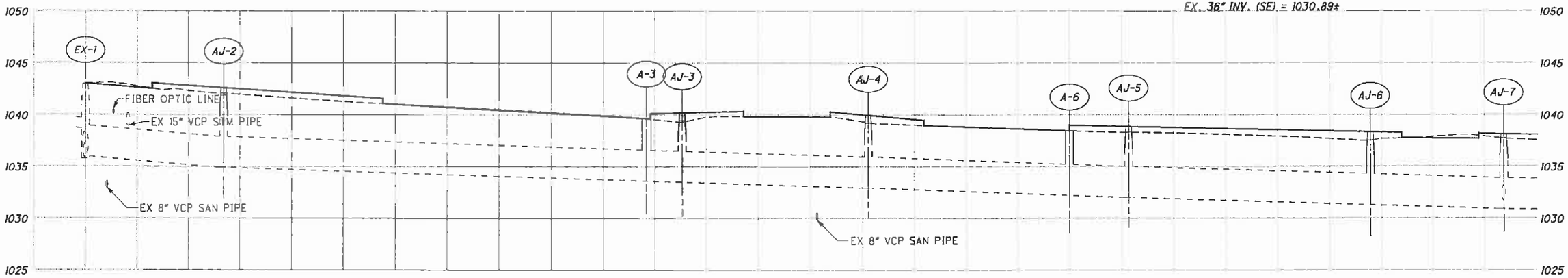

AJ-2
ITEM 604 - MANHOLE ADJUSTED TO GRADE
STA. 188+46.48, 26.0' RT. ℄ WALNUT AVE.
EX. COVER ELEV. = 1041.85±
PROP. COVER ELEV. = 1042.58
EX. 36" INV. (S) = 1034.91±
EX. 36" INV. (NW) = 1034.91±

A-3
ITEM 604 - CATCH BASIN, NO. 3A
STA. 190+09.00, 25.2' RT. ℄ WALNUT AVE.
GRATE ELEV. = 1039.65
EX. 36" INV. (N&S) = 1033.60±

AJ-4
ITEM 604 - MANHOLE ADJUSTED TO GRADE
STA. 190+95.06, 24.8' RT. ℄ WALNUT AVE.
EX. COVER ELEV. = 1039.20±
PROP. COVER ELEV. = 1039.75
EX. 36" INV. (N&S) = 1032.94±

AJ-5
ITEM 604 - MANHOLE ADJUSTED TO GRADE
STA. 191+95.43, 25.7' RT. ℄ WALNUT AVE.
EX. COVER ELEV. = 1038.32±
PROP. COVER ELEV. = 1038.87
EX. 36" INV. (N&S) = 1032.00±

AJ-6
ITEM 604 - MANHOLE ADJUSTED TO GRADE
STA. 192+88.07, 27.9' RT. ℄ WALNUT AVE.
EX. COVER ELEV. = 1037.22±
PROP. COVER ELEV. = 1037.77
EX. 15" INV. (E) = 1032.47±
EX. 36" INV. (N&S) = 1031.28±

AJ-8
ITEM 604 - MANHOLE ADJUSTED TO GRADE
STA. 195+50.84, 27.8' RT. ℄ WALNUT AVE.
EX. COVER ELEV. = 1036.56±
PROP. COVER ELEV. = 1037.41
EX. 36" INV. (N&S) = 1029.71±

EX-3
STA. 195+77.38, 25.2' RT. ℄ WALNUT AVE.
COVER ELEV. = 1037.29
EX. 36" INV. (W) = 1028.38±
EX. 36" INV. (N) = 1029.60±
EX. 45" INV. (S) = 1028.94±
EX. 48" INV. (E) = 1028.23±

A-13
ITEM 604 - CATCH BASIN, TYPE 3A
STA. 197+05.62, 25.0' RT. ℄ WALNUT AVE.
COVER ELEV. = 1036.14
EX. 45" INV. (N&S) = 1029.25±

AJ-12
ITEM 604 - MANHOLE ADJUSTED TO GRADE
STA. 198+21.67, 24.8' RT. ℄ WALNUT AVE.
EX. COVER ELEV. = 1036.09±
PROP. COVER ELEV. = 1036.68
EX. 15" INV. (W) = 1030.14±
EX. 24" INV. (SW) = 1029.14±
EX. 30" INV. (SE) = 1029.04±
EX. 45" INV. (N&S) = 1029.19±

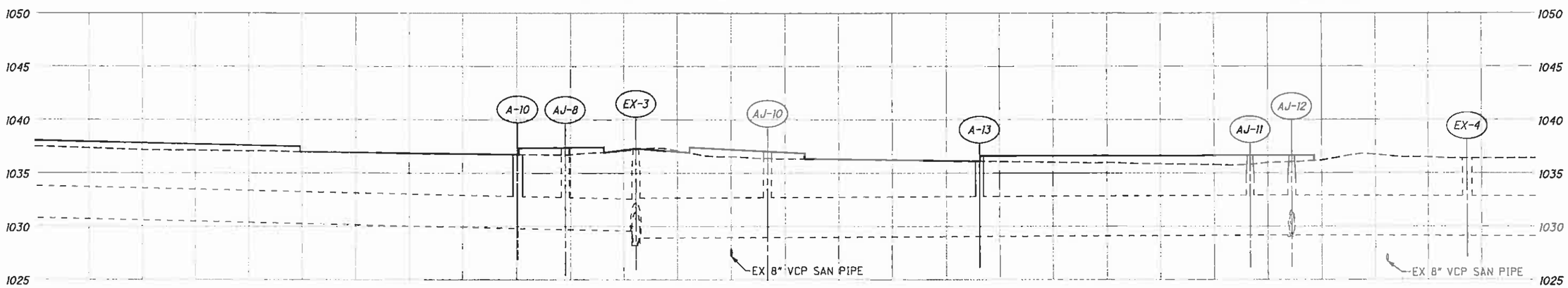

A-10
ITEM 604 - CATCH BASIN, NO. 3A
STA. 195+33.19, 25.2' RT. ℄ WALNUT AVE.
GRATE ELEV. = 1036.76
EX. 36" INV. (N&S) = 1029.96±

AJ-10
ITEM 604 - MANHOLE ADJUSTED TO GRADE
STA. 196+26.30, 27.8' RT. ℄ WALNUT AVE.
EX. COVER ELEV. = 1036.13±
PROP. COVER ELEV. = 1037.05
EX. 48" INV. (N&S) = 1028.99±

AJ-11
ITEM 604 - CATCH BASIN ADJUSTED TO GRADE
STA. 198+05.89, 28.1' RT. ℄ WALNUT AVE.
EX. COVER ELEV. = 1035.47±
PROP. COVER ELEV. = 1036.02
EX. 15" INV. (W) = 1031.57±
EX. 45" INV. (N&S) = 1029.27±

EX-4
STA. 198+87.52, 28.1' RT. ℄ WALNUT AVE.
EX. GRATE ELEV. = 1036.21
EX. 15" INV. (W) = 1032.50±
EX. 45" INV. (N&S) = 1029.56±

CALCULATED CJP
CHECKED WLC

STORM SEWER PROFILES

WALNUT & CHERRY
COMPLETE STREET
BIKE LANES

R:\Stark\SARTA\Task 3 Canton\STA\91592\drainage\sheets\91592DF001.dgn 6/28/2012 9:24:08 AM jroth

EX-5
STA. 199+73.80, 27.8' RT. ℄ WALNUT AVE.
COVER ELEV. = 1036.28
EX. 15" INV. (E) = 1030.38±
EX. 45" INV. (N & S) = 1028.84±

EX-7
STA. 200+98.35, 24.8' RT. ℄ WALNUT AVE.
COVER ELEV. = 1036.97
EX. 15" INV. (NE) = 1031.57±
EX. 15" INV. (NW) = 1031.45±
EX. 18" INV. (E) = 1029.00±
EX. 18" INV. (W) = 1029.75±
EX. 45" INV. (N&S)= 1028.94±

EX-8
STA. 201+41.54, 24.4' RT. ℄ WALNUT AVE.
COVER ELEV. = 1036.86
EX. 15" INV. (E) = 1031.42±
EX. 15" INV. (W) = 1031.42±
EX. 45" INV. (N&S)= 1028.46±

AJ-14
ITEM 604 - MANHOLE ADJUSTED TO GRADE
STA. 203+25.72, 24.5' RT. ℄ WALNUT AVE.
EX. COVER ELEV. = 1035.75
PROP. COVER ELEV. = 1036.25
EX. 45" INV. (N&S) = 1028.25±

AJ-17
ITEM 604 - MANHOLE ADJUSTED TO GRADE
STA. 203+70.76, 24.5' RT. ℄ WALNUT AVE.
EX. COVER ELEV. = 1035.18
PROP. COVER ELEV. = 1035.75
EX. 8" INV. (NW) = 1029.58±
EX. 18" INV. (E) = 1027.98±
EX. 45" INV. (N&S)= 1027.85±

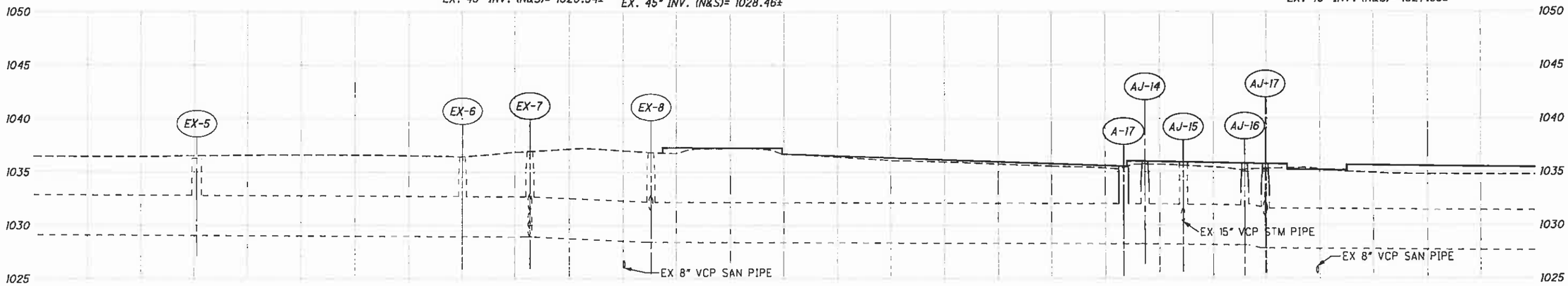

EX-6
STA. 200+72.68, 28.0' RT. ℄ WALNUT AVE.
EX. COVER ELEV. = 1036.33±
EX. 45" INV. (N&S) = 1029.03±

A-17
ITEM 604 - CATCH BASIN, NO. 3A
STA. 203+18.65, 24.5' RT. ℄ WALNUT AVE.
GRATE ELEV. = 1035.51
EX. 45" INV. (N&S) = 1028.26±

AJ-15
ITEM 604 - MANHOLE ADJUSTED TO GRADE
STA. 203+39.92, 20.0' RT. ℄ WALNUT AVE.
EX. COVER ELEV. = 1035.60±
PROP. COVER ELEV. = 1035.93
EX. 45" INV. (N&S) = 1028.21±

AJ-16
ITEM 604 - MANHOLE ADJUSTED TO GRADE
STA. 203+62.99, 25.1' RT. ℄ WALNUT AVE.
EX. COVER ELEV. = 1035.05±
PROP. COVER ELEV. = 1035.79
EX. 45" INV. (N&S) = 1028.13±

AJ-18
ITEM - 604 CATCH BASIN ADJUSTED TO GRADE
STA. 206+06.45, 25.0' RT. ℄ WALNUT AVE.
EX. COVER ELEV. = 1033.50±
PROP COVER ELEV. = 1034.05
EX. 15" INV. (E) = 1028.65±
EX. 45" INV. (N&S)= 1027.59±

EX-10
STA. 206+50.89, 24.6' RT. ℄ WALNUT AVE.
COVER ELEV. = 1034.59
EX. 15" INV. (W) = 1028.84±
EX. 15" INV. (SE) = 1028.89±
EX. 15" INV. (NW) = 1028.59±
EX. 45" INV. (N&S) = 1027.14±

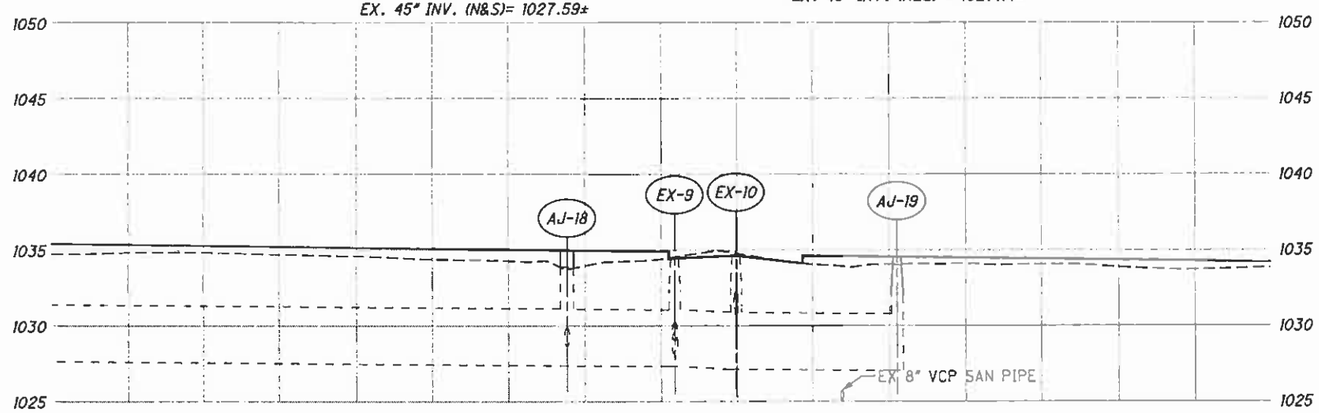

EX-9
STA. 206+34.70, 24.3' RT. ℄ WALNUT AVE.
COVER ELEV. = 1034.41
EX. 15" INV. (NW) = 1029.01±
EX. 18" INV. (E) = 1028.11±
EX. 45" INV. (N&S)= 1027.31±

AJ-19
ITEM 604 - MANHOLE ADJUSTED TO GRADE
STA. 206+93.21, 24.56' RT. ℄ WALNUT AVE.
EX. COVER ELEV. = 1033.99
PROP. COVER ELEV. = 1034.55
EX. 45" INV. (N&S) = 1027.04±

CALCULATED CJP
CHECKED WL_C

STORM SEWER PROFILE

WALNUT & CHERRY
COMPLETE STREET
BIKE LANES

R:\Stark\SARTA\Task 3 Canton\STA\91592\drainage\sheets\91592DF002.dgn 6/28/2012 9:25:08 AM jroth

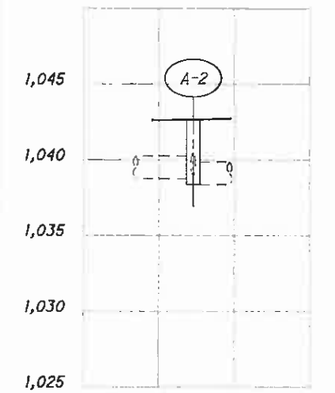

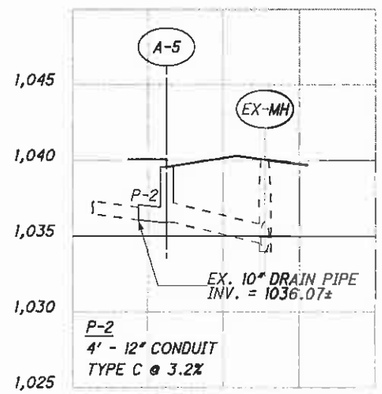

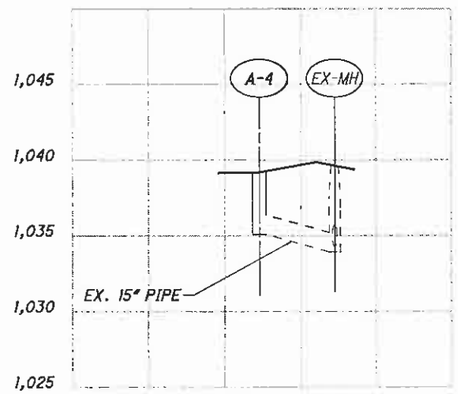

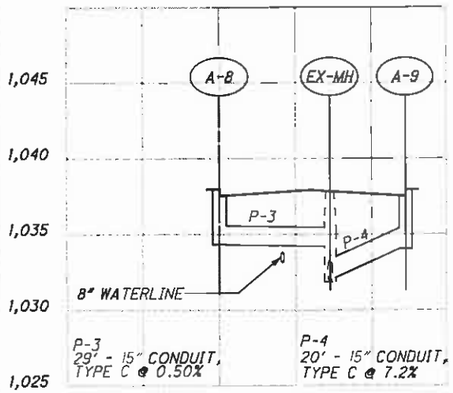

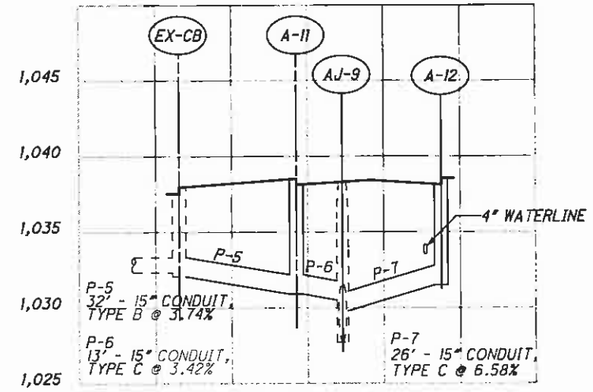

A-2
ITEM 604 - CATCH BASIN, NO. 3A
STA. 19+49.44, 17.2' RT. ℄ 6TH ST.
GRATE ELEV. = 1042.67
EX. 18" INV. (W) = 1038.37±
EX. 18" INV. (SE) = 1038.97±
18" INV. (SW) = 1038.77

A-5
ITEM 604 - CATCH BASIN, NO. 3A
STA. 29+53.58, 15.3' LT. ℄ 5TH ST.
COVER ELEV. = 1039.69
EX. 15" INV. (S) = 1035.91±
12" INV. (N) = 1035.91

EX-MH
STA. 29+58.43, 10.5' RT. ℄ 5TH ST.
COVER ELEV. = 1040.07
EX. 15" INV. (NW) = 1034.54±
EX. 24" INV. (E&W) = 1033.97±
18" INV. (SW) = 1036.00

A-4
ITEM 604 - CATCH BASIN, NO. 3A
STA. 30+46.64, 15.0' LT. ℄ 5TH ST.
GRATE ELEV. = 1039.18
EX. 15" INV. (S) = 1035.10±

EX-MH
STA. 30+46.97, 4.98' RT. ℄ 5TH ST.
COVER ELEV. = 1039.63±
EX. 18" INV. (E) = 1034.27±
EX. 18" INV. (W) = 1033.93±
EX. 15" INV. (N) = 1033.93±

A-8
ITEM 604 - CATCH BASIN, NO. 3A
STA. 40+56.95, 19.9' LT. ℄ 4TH ST.
GRATE ELEV. = 1037.57
15" INV. (S) = 1034.34

EX-MH
STA. 40+41.53, 5.1' RT. ℄ 4TH ST.
COVER ELEV. = 1037.86±
EX. 24" INV. (E & W) = 1031.86±
15" INV. (N) = 1034.20
15" INV. (S) = 1032.61

A-9
ITEM 604 - CATCH BASIN, NO. 3A
STA. 40+55.81, 18.5' RT. ℄ 4TH ST.
GRATE ELEV. = 1037.55
15" INV. (N) = 1034.05

EX. CATCH BASIN
STA. 195+51.29, 28.0' LT. ℄ WALNUT AVENUE
GRATE ELEV. = 1036.28
EX. 12" INV. (N) = 1032.33±
15" INV. (SW) = 1032.08

A-11
ITEM 604 - CATCH BASIN. NO. 3A
STA. 50+54.85, 17.0' LT. ℄ 3RD ST. N.E.
GRATE ELEV. = 1036.32
15" INV. (NW) = 1030.92
15" INV. (S) = 1030.92

A-12
ITEM 604 - CATCH BASIN, NO. 3A
STA. 50+54.85, 17.0' RT. ℄ 3RD ST.
GRATE ELEV. = 1036.25
15" INV. (N) = 1031.50
EX. 8" INV. (E) = 1032.75±

AJ-9
STA. 50+46.15, 7.67' LT. ℄ 3RD ST.
EX. COVER ELEV. = 1037.03±
COVER ELEV. = 1037.00
EX. 48" INV. (E & W) = 1027.73±
15" INV. (N) = 1030.51
15" INV. (S) = 1029.79

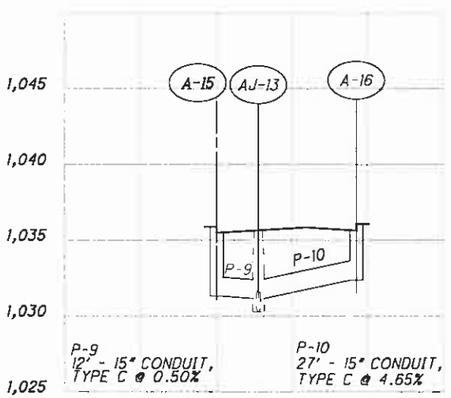

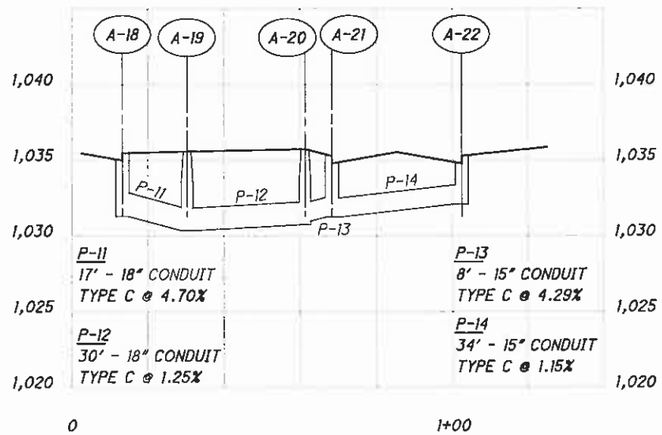

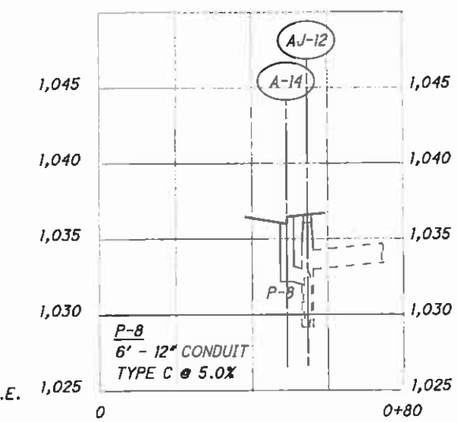

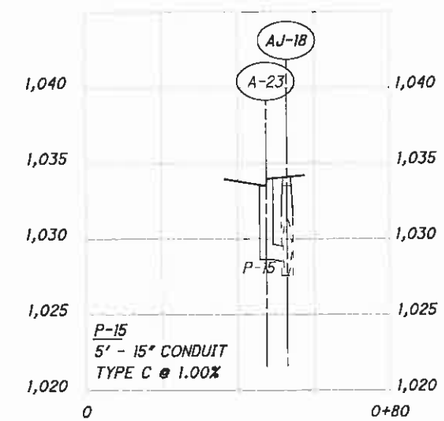

A-15
ITEM 604 - CATCH BASIN, NO. 3A
STA. 60+55.00, 17.0' LT. ℄ 2ND ST. N.E.
GRATE ELEV. = 1035.50
15" INV. (S) = 1031.32

AJ-13
STA. 60+46.79, 86.' LT. ℄ 2ND ST. N.E.
EX. COVER ELEV. = 1036.25±
COVER ELEV. = 1036.20
EX. 24" INV. (E & W) = 1030.86±
15" INV. (N) = 1031.18
15" INV. (S) = 1031.18

A-16
ITEM 604 - CATCH BASIN, NO. 3A
STA. 60+55.00, 17.0' RT. ℄ 2ND ST. N.E.
GRATE ELEV. = 1036.00
15" INV. (N) = 1032.39

A-18
ITEM 604 - CATCH BASIN, NO. 3A
STA. 203+50.00, 22.0' LT. ℄ WALNUT AVE.
GRATE ELEV. = 1035.00
18" INV. (S) = 1031.30

A-19
ITEM 604 - MANHOLE, NO. 3
STA. 203+67.00, 19.5' LT. ℄ WALNUT AVE.
COVER ELEV. = 1035.60
18" INV. (E) = 1030.36
18" INV. (N) = 1030.50
EX. 18" INV. (W) = 1030.36±

A-20
ITEM 604 - MANHOLE, NO. 3
STA. 80+50.00, 23.5' LT. ℄ 2ND STREET S.E.
COVER ELEV. = 1035.75
15" INV. (SE) = 1031.00
18" INV. (W) = 1030.75
EX. 8" INV. (W) = 1031.12±

A-22
ITEM 604 - CATCH BASIN, NO. 3A
STA. 80+54.00, 17.0' RT. ℄ 2ND STREET S.E.
GRATE ELEV. = 1034.81
15" INV. (N) = 1032.11

A-21
ITEM 604 - CATCH BASIN, NO. 3A
STA. 80+54.00, 17.0' LT. ℄ 2ND STREET S.E.
GRATE ELEV. = 1034.81
15" INV. (S &NW) = 1031.50

AJ-12
ITEM 604 - MANHOLE, ADJUSTED TO GRADE
STA. 198+21.67, 24.8' RT. ℄ WALNUT AVE.
EX. COVER ELEV. = 1036.09±
COVER ELEV. = 1036.68
12" INV. (E) = 1032.00
EX. 15" INV. (W) = 1033.00±
EX. 45" INV. (N&S) = 1029.18±
EX. 30" INV. (SE) = 1029.04

A-14
ITEM 604 - CATCH BASIN, NO. 3A
STA. 198+21.67, 18.73' RT. ℄ WALNUT STREET.
COVER ELEV. = 1036.00
12" INV. (E) = 1032.25

AJ-18
ITEM 604 - CATCH BASIN ADJUSTED TO GRADE
STA. 206+06.45, 25.0' RT. ℄ WALNUT ST.
EX. GRATE ELEV. = 1033.50±
GRATE ELEV. = 1034.08
15" INV. (E) = 1028.65
EX. 45" INV. (N & S) = 1027.59±

A-23
ITEM 604 - CATCH BASIN, NO. 3A
STA. 206+06.45, 20.0' RT. ℄ WALNUT AVENUE
GRATE ELEV. = 1033.50
15" INV. (W) = 1028.70

P-2, P-3, P-4, P-5, P-6, P-7, P-8, P-9, P-10, P-11, P-12, P-13, P-14, P-15

CALCULATED CJP
CHECKED WLC

STORM SEWER PROFILES

WALNUT & CHERRY
COMPLETE STREET
BIKE LANES

R:\Stark\SARTA\Task 3 Canton\STA\91592\drainage\sheets\91592DF003.dgn 6/28/2012 9:25:31 AM jroth

GUARANTEE

THE CONTRACTOR SHALL GUARANTEE THAT THE TRAFFIC CONTROL TROL SYSTEM INSTALLED AS PART OF THIS CONTRACT SHALL OPERATE SATISFACTORILY FOR A PERIOD OF 120 DAYS FOLLOWING COMPLETION OF THE 10-DAY PERFORMANCE TEST. IN THE EVENT OF UNSATISFACTORY OPERATION THE CONTRACTOR SHALL CORRECT FAULTY INSTALLATIONS, MAKE REPAIRS AND REPLACE DEFECTIVE PARTS WITH NEW PARTS OF EQUAL OR BETTER QUALITY. EQUIPMENT, MATERIAL AND LABOR COSTS INCURRED IN CORRECTING AN UNSATISFACTORY OPERATION SHALL BE BORNE BY THE CONTRACTOR.

THE GUARANTEE SHALL COVER THE FOLLOWING ITEMS OF THE TRAFFIC CONTROL SYSTEM: CONTROLLERS AND ASSOCIATED EQUIPMENT, INTERCONNECTION ITEMS AND MASTER CONTROL EQUIPMENT.

CUSTOMARY MANUFACTURER'S GUARANTEES FOR THE FOREGOING ITEMS SHALL BE TURNED OVER TO THE STATE OR THE MAINTAINING AGENCY FOLLOWING ACCEPTANCE OF THE EQUIPMENT.

THE COST OF GUARANTEEING THE TRAFFIC CONTROL SYSTEM WILL BE INCIDENTAL TO AND INCLUDED IN THE CONTRACT UNIT PRICE OF THE VARIOUS ITEMS MAKING UP THE SYSTEM.

NOTIFICATION

THE CONTRACTOR SHALL GIVE THE CITY OF CANTON, (330) 489-3381, AND THE ODOT DISTRICT TRAFFIC OFFICE, (330) 786-3145, TEN (10) WORKING DAYS NOTICE PRIOR TO THE SIGNAL BEING PLACED IN THE "FLASH" MODE.

THE SIGNAL INSTALLATION SHALL BE INSPECTED BY CITY OF CANTON AND ODOT DISTRICT PERSONNEL PRIOR TO BEING PLACED IN THE "STOP-AND-GO" MODE. ALL DEFICIENCIES OF AN OPERATIONALLY CRITICAL NATURE SHALL BE CORRECTED AND APPROVED BY THE CITY OF CANTON AND ODOT DISTRICT TRAFFIC OFFICE BEFORE PLACING THE SIGNAL IN THE "STOP-AND-GO" MODE.

FHWA EXPERIMENTATION NUMBER: 9(09)-28(E) -
BIKE SIGNAL HEADS AND TWO-STAGE TURN QUEUE BOXES - CANTON, OH

BICYCLE SIGNAL HEADS AND TWO-STAGE TURN QUEUE BOXES HAVE BEEN APPROVED FOR THIS PROJECT BY THE FHWA ON 2/10/2012.

BICYCLE SIGNAL HEADS AND TWO-STAGE TURN QUEUE BOXES ARE EXPERIMENTAL AND THE CITY SHALL PREPARE SEMI-ANNUAL PROGRESS REPORTS AND SUBMIT A FINAL EVALUATION REPORT TO THE FHWA AT THE END OF THE STUDY PERIOD.

TRAFFIC SIGNAL & ELECTRICAL WIRING IN AEP DUCT BANKS

SEVERAL SIGNALIZED INTERSECTIONS WILL UTILIZE EXISTING AEP DUCT BANKS AS CONDUIT FOR TRAFFIC SIGNAL WIRE/S AND ELECTRICAL WIRE/S BETWEEN TRAFFIC SIGNAL DEVICES/STREET LIGHTS/CAMERAS AND TRAFFIC CONTROL CABINETS/MILBANK PEDESTALS. THE CITY'S CONTRACTOR SHALL PROVIDE ALL MATERIAL, EQUIPMENT AND LABOR NECESSARY TO COMPLETE THE WIRING BETWEEN ALL TRAFFIC SIGNAL DEVICES/STREET LIGHTS/CAMERAS AND TRAFFIC CONTROL CABINETS/MILBANK PEDESTALS IN ACCORDANCE WITH THE PLANS; ENSURE SLACK LOOPS ARE PROVIDED IN PULL BOXES; AND ENSURE NO SPLICES ARE INSTALLED IN WIRING BETWEEN TRAFFIC SIGNAL DEVICES/STREET LIGHTS/CAMERAS AND TRAFFIC CONTROL CABINETS/MILBANK PEDESTAL. ALL WIRING PLACEMENT THRU AEP DUCT BANKS MUST BE PERFORMED BY AEP OR AN AEP CONTRACTOR; THEREFORE, THE CITY'S CONTRACTOR SHALL BE RESPONSIBLE FOR COORDINATING ALL WORK ASSOCIATED WITH AEP DUCT BANKS WITH AEP OR THEIR DULY AUTHORIZED AGENT.

TO DIFFERENTIATE BETWEEN WIRING WORK PERFORMED WITHIN EXISTING AEP DUCT BANKS AND PROPOSED CITY CONDUIT, THE PAY ITEM IN THE PLANS WILL INDICATE "BY AEP" OR "BY CONTRACTOR", RESPECTIVELY.

SIGNAL CABLE AND LOOP DETECTOR LEAD-IN CABLE CONTINGENCY QUANTITIES

THE FOLLOWING ESTIMATED QUANTITIES HAVE BEEN INCLUDED IN THE GENERAL SUMMARY FOR USE AS DIRECTED BY THE ENGINEER TO ACCOUNT FOR CABLE LENGTH DISCREPANCIES THAT MAY BE ENCOUNTERED IN THE FIELD DUE TO UNRECORDED MODIFICATIONS MADE TO CONDUIT RUNS AND SIGNAL EQUIPMENT PLACEMENT DURING THE INITIAL CONSTRUCTION OF THE TRAFFIC SIGNAL SYSTEM.

THE CONTRACTOR SHALL NOT ORDER MATERIALS OR PERFORM WORK FOR ITEMS DESIGNATED BY PLAN NOTE TO BE USED "AS DIRECTED BY THE ENGINEER" UNLESS AUTHORIZED BY THE ENGINEER. THE ACTUAL WORK LOCATIONS AND QUANTITIES USED FOR SUCH ITEMS SHALL BE INCORPORATED INTO THE FINAL CHANGE ORDER GOVERNING COMPLETION OF THIS PROJECT.

ITEM 632 - SIGNAL CABLE, 7 CONDUCTOR, NO. 14 AWG (BY CONTRACTOR)	200 FT.
ITEM 632 - SIGNAL CABLE, 7 CONDUCTOR, NO. 14 AWG (BY AEP)	120 FT.
ITEM 632 - LOOP DETECTOR LEAD-IN CABLE (BY CONTRACTOR)	60 FT.
ITEM 632 - LOOP DETECTOR LEAD-IN CABLE (BY AEP)	70 FT.

CALCULATED JMK
CHECKED WLC

TRAFFIC CONTROL NOTES

WALNUT & CHERRY COMPLETE STREET BIKE LANES

R:\Stark\SARTA\Task 3 Canton\STA\91592\signals\sheets\91592CN001.dgn 6/29/2012 1:36:46 PM bill

ITEM 630 - SIGN, PERMANENT OVERLAY, AS PER PLAN
SIGN S-267, WHICH IS SHOWN ON PLAN SHEET NO. 87, IS TO REMAIN IN PLACE WITH A PERMANENT OVERLAY INSTALLED. THE EXISTING SIGN DESIGN IS TO REMAIN, WITH THE WORDS "CHERRY LANE" TO BE REPLACED BY THE WORDS "CHERRY AVENUE". THE NEW WORDS SHALL BE CENTERED HORIZONTALLY ON THE SIGN AND SHALL HAVE THE SAME TEXT HEIGHT AND VERTICAL DISTANCE FROM THE BOTTOM OF THE SIGN. THE NEW WORDS SHALL BE PRINTED IN WHITE. THE SIGN OVERLAY SHALL MEET ALL CURRENT MUTCD AND FHWA RETROREFLECTIVITY STANDARDS.

ITEM 630 - REMOVAL OF GROUND MOUNTED SIGN AND STORAGE, AS PER PLAN
ITEM 630 - REMOVAL OF GROUND MOUNTED POST SUPPORT AND STORAGE, AS PER PLAN
ITEM 630 - REMOVAL OF POLE MOUNTED SIGN AND STORAGE, AS PER PLAN
THE CONTRACTOR SHALL BE RESPONSIBLE FOR REMOVING AND STORING EXISTING GROUND MOUNTED SIGNS, EXISTING GROUND MOUNTED POST SUPPORTS AND EXISTING POLE MOUNTED SIGNS INDICATED ON THE PLANS PER 630.12 AND 630.14. THE CONTRACTOR SHALL CONTACT THE CITY TO ARRANGE TIME FOR DELIVERY OF THE MATERIALS.

LISTED BELOW IS CONTACT INFORMATION FOR THIS WORK:
CITY OF CANTON
ATTN: DANIEL E. GUTH
2506 CLEVELAND AVENUE S.W.
CANTON, OHIO 44707
PHONE: 330-438-6686

ITEM 631 - INTERNALLY ILLUMINATED FIXED MESSAGE SIGN, AS PER PLAN
AT THE INTERSECTION OF WALNUT AVENUE AND TUSCARAWAS STREET, THERE ARE EXISTING INTERNALLY ILLUMINATED FIXED MESSAGE SIGNS ON MAST ARMS THAT REQUIRE NEW SIGN INSERTS THE CONTRACTOR SHALL CONTACT THE CITY FOR PRIOR AUTHORIZATION BEFORE DISCONNECTING AND REPLACING ANY OF THE INTERNALLY ILLUMINATED SIGNS. THE CONTRACTOR SHALL OBTAIN EXISTING CONSTRUCTION PLANS FROM THE CITY FOR EXISITNG SIGN MATERIALS AND SPECIFICATIONS.

SIGN S-254 CONTAINS 2 EXISTING WIRED SIGN FIXTURES THAT REQUIRE 2 NEW SIGN INSERTS.

SIGN S-255 CONTAINS 3 EXISTING WIRED SIGN FIXTURES THAT REQUIRED 3 NEW SIGN INSERTS.

SIGN S-256 CONTAINS 1 EXISTING WIRED SIGN FIXTURES THAT REQUIRES 2 NEW SIGN INSERTS TO ACCOMODATE TWO-WAY TRAFFIC ALONG WALNUT AVENUE.

THE EXISTING WIRING SHALL REMAIN FOR ALL SIGNS.

ITEM 644 - PAVEMENT MARKING, MISC.: WORD ON PAVEMENT, 36"
THE CONTRACTOR SHALL APPLY PAVEMENT MARKINGS AT THE LOCATION SHOWN ON PLAN SHEET NO. 89 USING A SCALED DOWN VERISON OF THE WORD ON PAVEMENT "STOP".

THE WORD ON PAVEMENT SHALL BE DEVIATE FROM THE STANDARD SIZE IN THAT IT MAY BE SMALLER THAN WHAT IS MINIMALLY REQUIRED, BUT IT SHOULD BE SCALED DOWN RELATIVELY TO FIT INTO THE 5-FOOT BIKE LANE.

ALL OTHER REQUIREMENTS OF SECTIONS 644 OF THE ODOT CMS SHALL STILL BE APPLICABLE.

ITEM 644 - PAVEMENT MARKING, MISC.: GREEN BIKE BOX
IN 2011, ODOT WAS GRANTED APPROVAL BY FHWA TO USE GREEN COLORED PAVEMENT IN MARKED BIKE LANES STATEWIDE IN OHIO.

THIS PROJECT SPECIFIES GREEN PAINT WITHIN A PAINTED BIKE BOX ON THE PAVEMENT AT LOCATIONS SHOWN IN THE PLANS.

PAYMENT FOR THIS ITEM INCLUDES THE PAINTED GREEN BIKE BOX AND A 4" WHITE EDGE LINE ALONG THE OUTSIDE EDGE OF THE GREEN BIKE BOX. THE MINIMUM DIMENSIONS OF EACH BIKE BOX SHALL BE TEN (10) FEET BY TEN (10) FEET. FOR A TRAPEZOIDAL BIKE BOX, THE MINIMUM LENGTH OF ANYBOUNDARY LINE THAT IS PERPENDICULAR OR PARALLEL TO THE CENTERLINE IS TEN (10) FEET.

GREEN COLORED PAINT USED FOR BIKE BOXES SHALL CONFORM TO MUTCD AND FHWA COLOR SPECIFICATIONS.

ALL OTHER REQUIREMENTS OF SECTIONS 644 OF THE ODOT CMS SHALL STILL BE APPLICABLE.

ITEM 644 - PAVEMENT MARKING, MISC.: GREEN PAINTED LANE
IN 2011, ODOT WAS GRANTED APPROVAL BY FHWA TO USE GREEN COLORED PAVEMENT IN MARKED BIKE LANES STATEWIDE IN OHIO.

THIS PROJECT SPECIFIES GREEN PAINT WITHIN A PAINTED BIKE LANE ON THE PAVEMENT AT LOCATIONS SHOWN IN THE PLANS.

PAYMENT FOR THIS ITEM ONLY INCLUDES THE PAINTED GREEN BIKE LANE. PAYMENT FOR THE DOTTED LINE ALONG THE OUTSIDE EDGE OF THE GREEN BIKE LANE IS PAID FOR SEPARATELY IN THE PLANS.

GREEN COLORED PAINT USED FOR BIKE LANES SHALL CONFORM TO MUTCD AND FHWA COLOR SPECIFICATIONS.

ALL OTHER REQUIREMENTS OF SECTIONS 644 OF THE ODOT CMS SHALL STILL BE APPLICABLE.

CALCULATED JMK
CHECKED WLC

TRAFFIC CONTROL NOTES

WALNUT & CHERRY COMPLETE STREET BIKE LANES

R:\Stark\SARTA\Task 3 Canton\STA\91592\signals\sheets\91592CN002.dgn 6/29/2012 1:37:04 PM bill

TRENCH IN PAVED AREA, (BY TYPE), AS PER PLAN
IN ADDITION TO THE REQUIREMENTS OF 625.11, THIS ITEM SHALL INCLUDE FULL SLAB REPLACEMENT WHEN TRENCHING IN SIDEWALK. BORING OR JACKING THE CONDUIT UNDER THE PAVEMENT CAN BE PERFORMED IN LIEU OF TRENCHING. IF BORING OR JACKING IS PERFORMED IN LIEU OF TRENCHING, THE CONDUIT PLACED SHALL BE 725.04. ANY EXTRA COST FOR THE 725.04 CONDUIT SHALL BE INCLUDED IN THIS ITEM.

ITEM 625 - PULL BOX, 725.06, (BY SIZE)
ALL PULL BOXES SHALL INCLUDE A POLYMER CONCRETE RING AND COVER AND SHALL BE MARKED "TRAFFIC". THE PULL BOX SHALL BE FIBERGLASS REINFORCED POLYESTER, OR EQUAL, WITH INSERTS AND SHALL BE 18" IN DEPTH. EACH PULL BOX SHALL INCLUDE TWO (2) STAINLESS STEEL HEX BOLTS. EACH PULL BOX AND COVER SHALL HAVE A MINIMUM LOAD RATING OF 20,000 POUNDS CAPACITY IN ACCORDANCE WITH THE WESTERN UNDERGROUND COMMITTEE GUIDE 3.6. UNDERDRAINS SHALL NOT BE INSTALLED IN PULL BOXES.

ITEM 632 - VEHICULAR SIGNAL HEAD, (LED), 3-SECTION, 12" LENS, 1-WAY, POLYCARBONATE, AS PER PLAN (FOR BICYCLES)
IN ADDITION TO THE REQUIREMENTS OF CMS 632 AND 732, THE FOLLOWING REQUIREMENTS SHALL ALSO APPLY:

A. VEHICULAR SIGNAL HEADS SHALL BE FREE SWINGING.
B. ALL UPPER SIGNAL SUPPORT HARDWARE AND PIPING UP TO AND INCLUDING THE WIRE INLET FITTING SHALL SHALL BE FERROUS METAL FOR SIGNAL DISPLAYS OF TWO OR MORE SECTIONS.
C. THE ENTRANCE FITTING SHALL BE OF THE TRI-STUD DESIGN WITH SERRATED RINGS IN ORDER TO ACHIEVE POSITIVE LOCKING.
D. VEHICULAR SIGNAL HEADS SHALL BE PROVIDED WITH A PIVOT AND LOCK BALANCE ADJUSTER. ALL BALANCE ADJUSTERS SHALL HAVE A MINIMUM THREE-QUARTER INCH (19 MILLIMETER) EYE BOLT AND THREE-QUARTER INCH (19 MILLIMETER) WIDE SLOT. EYEBOLTS ARE CAST FROM 316 STAINLESS STEEL AND PROVIDED WITH A SATIN FINISH. THREE-QUARTER INCH (19 MILLIMETER) BODY HALVES ARE CAST FROM A MINIMUM 65-45-12 DUCTILE IRON AND PROVIDED WITH A BRIGHT ZINC FINISH (ZNI).
E. ALL LAMP UNITS SHALL BE THE 12 INCH (300 MILLIMETER) SIZE AND BE EQUIPPED WITH 12"X11" CUTAWAY VISORS, UNLESS OTHERWISE NOTED IN THE PLANS.
F. SIGNAL HEADS AND VISORS SHALL BE CONSTRUCTED OF POLYCARBONATE PLASTIC AND MEET ITE SPECIFICATIONS.
G. PIPE, SPACERS AND FITTINGS CONSTRUCTED OF ALUMINUM.
H. SIGNALS DENOTED AS "PROPOSED BICYCLE SIGNAL HEADS" SHALL INCLUDE THREE (3) 12" BICYCLE LED TRAFFIC MODULES PER SIGNAL HEAD.
   a. OPERATING VOLTAGE RANGE: 80 VAC TO 135 VAC 135 VAC (120 VAC NOMINAL)
   b. OPERATING TEMPERATURE RANGE: -40°C TO +74°C
   c. MEETS ITE VTCSH LED CIRCULAR SUPPLEMENT DATED JUNE 27, 2005 COLOR REQUIREMENTS
   d. QUICK CONNECT TERMINALS WITH SPADE/TAB ADAPTERS
   e. 75 mSec TURN ON TIME
   f. RF IMMUNITY 10V/M, 80 MHz TO 1 Ghz
   g. COMPLIES WITH FCC TITLE 47, SUBPART B SECTION 15 FOR RADIATED EMISSIONS
   h. VIBRATION RESISTANT TO MIL-STD-883, TEST METHOD 2007
   i. MOISTURE RESISTANT PER MIL-STD-810F, METHOD 506.4 FOR RAIN AND BLOWING RAIN
   j. POWER SUPPLY IS CONFORMAL COATED
   k. TRANSIENT SUPPRESSION EXCEEDS ITE VTCSH_LED REQUIREMENTS
   l. ALL PRODUCTS TRACEABLE BY SERIAL NUMBER
I. PROPER EXTERIOR COLORS SHALL BE OBTAINED BY USE OF COLORED PLASTIC MATERIAL RATHER THAN PAINTING. ALL EXTERIOR COLOR SHALL BE FEDERAL HIGHWAY YELLOW OR BLACK AT INTERSECTIONS THAT CONTAIN NOSTALGIA SIGNAL SUPPORTS AND PEDESTALS. THE FOLLOWING IS A SUMMARY OF THE SIGNAL HEADS NEEDED:

3-SECTION, 1-WAY (BLACK COLORED HEADS)	9 EA.
12" BICYCLE LED TRAFFIC MODULE	
RED	9 EA.
YELLOW	9 EA.
GREEN	9 EA.

ITEM 632 - VEHICULAR SIGNAL HEAD, (LED), 3-SECTION, 12" LENS, 1-WAY, POLYCARBONATE, AS PER PLAN (FOR BICYCLES) CONTINUED
THE CONTRACTOR SHALL PROVIDE THE CITY, IN WRITING, THE LED MANUFACTURER NAME, SERIAL NUMBER, PART NUMBER, DESCRIPTION OF LAMP, AND DATE OF MANUFACTURE FOR ALL LED UNITS TO BE USED IN THE TRAFFIC SIGNAL HEADS PRIOR TO INSTALLATION, FOR ACCEPTANCE AND WARRANTY PURPOSES. THE INFORMATION SHALL BE SENT TO THE FOLLOWING LOCATION:

CITY OF CANTON
ATTN: DOUGLAS SERBAN
2436 30TH STREET N.E.
CANTON, OHIO 44705
PHONE: 330-438-6924

ITEM 632 - VEHICULAR SIGNAL HEAD, (LED), 3-SECTION, 12" LENS, 1-WAY, POLYCARBONATE, AS PER PLAN (FOR BICYCLES) SHALL BE MEASURED BY THE NUMBER OF COMPLETE UNITS FURNISHED AND INSTALLED, AND WILL INCLUDE ALL SUPPORT AND MOUNTING HARDWARE, DISCONNECT HANGERS, CLOSURE CAPS, DIMMERS AND LAMPS AS SPECIFIED.

CALCULATED JMK | CHECKED WLC

TRAFFIC CONTROL NOTES

WALNUT & CHERRY
COMPLETE STREET
BIKE LANES

R:\Stark\SARTA\Task 3 Canton\STA\91592\signals\sheets\91592CN003.dgn 6/29/2012 1:37:24 PM bif

ITEM 632 - REMOVAL OF MISC. TRAFFIC SIGNAL ITEM - PEDESTAL
THE REMOVAL SHALL CONSIST OF SIGNAL SUPPORTS, PEDESTALS, ALL MOUNTING HARDWARE AND FOUNDATIONS. EXTREME CARE SHALL BE EXERCISED BY THE CONTRACTOR FOR ALL ITEMS REMOVED FOR STORAGE. IF AN ITEM IS DAMAGED AND DETERMINED TO BE NON-FUNCTIONAL BY THE ENGINEER AND THAT ITEM WAS FUNCTIONING PRIOR TO ITS REMOVAL BY THE CONTRACTOR, THE DAMAGED ITEM SHALL BE REPLACED FULLY, IN KIND BY THE CONTRACTOR.

PEDESTALS REMOVED SHALL BE DELIVERED TO THE CITY OF CANTON - TRAFFIC SIGN AND MARKINGS.

LISTED BELOW IS CONTACT INFORMATION FOR THIS WORK:
CITY OF CANTON
ATTN: DOUGLAS SERBAN
2436 30TH STREET N.E.
CANTON, OHIO 44705
PHONE: 330-438-6924

ITEM 632 - REMOVAL OF TRAFFIC SIGNAL INSTALLATION FOR FOR STORAGE, AS PER PLAN
THE CONTRACTOR SHALL REMOVE TRAFFIC SIGNAL INSTALLATION, INCLUDING SIGNAL HEADS, CABLE, MESSENGER WIRE, SIGNAL SUPPORTS, MAST ARMS, CABINETS, CONTROLLERS, ETC. AS INDICATED ON THE PLANS IN ACCORDANCE WITH 632.26.

SIGNAL SUPPORTS, MAST ARMS AND PEDESTRIAN SIGNAL SUPPORTS REMOVED SHALL BE DELIVERED TO THE CITY OF CANTON - TRAFFIC SIGN AND MARKINGS

LISTED BELOW IS CONTACT INFORMATION FOR THIS WORK:
CITY OF CANTON
ATTN: DANIEL GUTH
2506 CLEVELAND AVENUE S.W.
CANTON, OHIO 44707
PHONE: 330-438-6686

UNLESS OTHERWISE DESIGNATED, ALL OTHER ITEMS SHALL BE DELIVERED TO THE CITY OF CANTON - TRAFFIC SIGNAL & STREET LIGHTING

LISTED BELOW IS CONTACT INFORMATION FOR THIS WORK:
CITY OF CANTON
ATTN: DOUGLAS SERBAN
2436 30TH STREET N.E.
CANTON, OHIO 44705
PHONE: 330-438-6924

ALL CABLE LOCATED IN AEP DUCTS SHALL BE REMOVED BY AEP. PERSONNEL. THE CONTRACTOR SHALL CONTACT AEP TO INITIATE REMOVAL OF CABLE LOCATED IN AEP DUCTS.

ITEM 632 - REUSE OF VEHICULAR SIGNAL HEAD, AS PER PLAN
ITEM 632 - REUSE OF PEDESTRIAN SIGNAL HEAD, AS PER PLAN
THE CONTRACTOR SHALL REMOVE AND REINSTALL OR RE-ERECT EXISTING VEHICULAR SIGNAL HEADS AND EXISTING PEDESTRIAN SIGNAL HEADS INDICATED ON THE PLANS PER 632.27 AND 632.29.

PAYMENT FOR ITEM 632 - REUSE OF VEHICULAR SIGNAL HEAD, AS PER PLAN AND ITEM 632 - REUSE OF PEDESTRIAN SIGNAL HEAD, AS PER PLAN SHALL BE MADE AT THE CONTRACT UNIT PRICE FOR EACH SIGNAL HEAD REMOVED AND RE-INSTALLED OR RE-ERECTED, AND WILL INCLUDE CLEANING, RESTORING AND RELAMPING, AS WELL AS ALL ADDITIONAL HARDWARE AND INCIDENTALS NECESSARY TO ALLOW REUSE OF THE EQUIPMENT.

ITEM 633 - PREEMPTION, AS PER PLAN
THIS ITEM OF WORK SHALL CONSIST OF REMOVING AND REERECTING PREEMPTION EQUIPMENT ON MAST ARMS AT THE LOCATIONS SHOWN IN THE PLANS.

EACH INTERSECTION SHOWN IN THE PLANS SHALL HAVE THE FOLLOWING COMPONENTS:
1. PREEMPT RECEIVING UNIT.
2. PREEMPT DETECTOR CABLE.
3. PREEMPT PHASE SELECTOR ASSEMBLY AND INTERFACE WIRING PANEL.
4. CONFIRMATION LIGHT.

THE EQUIPMENT SHALL BE THOROUGHLY TESTED AFTER REERECTION. AS A MINIMUM, THE CONTRACTOR SHALL VERIFY THAT ALL CONNECTIONS ARE PROPERLY MADE TO THE CONTROLLER CABINETS. THE CONTRACTOR SHALL CHECK THAT THE RANGE SETTING IS PROPER FOR EACH INTERSECTION. THE CONTRACTOR SHALL DETERMINE THAT ALL PHASE SELECTORS ARE SELECTING THE PROPER PHASE AND TIMING ACCURATELY. THE CONTRACTOR SHALL VERIFY THAT ALL VEHICLE EMITTERS ARE BEING PROPERLY DETECTED. THE SYSTEM SHALL BE CAPABLE OF PREEMPTING AND RECEIVING PRIORITY FOR EACH APPROACH TO THE INTERSECTION. IT SHALL BE POSSIBLE TO DETECT THE EMERGENCY VEHICLE UP TO 1200 FEET FROM THE INTERSECTION.

IF THE PREEMPTION EQUIPMENT CANNOT BE REERECTED, THEN THE CONTRACTOR SHALL SUPPLY THE NECESSARY COMPONENTS, EACH BID SEPARATELY. ALL EQUIPMENT SUPPLIED BY THE CONTRACTOR SHALL BE COMPATIBLE WITH THE CITY OF CANTON'S EXISTING PREEMPTION SYSTEM.

PAYMENT FOR ITEM 633 "PREEMPTION, AS PER PLAN" SHALL BE MADE AT THE CONTRACT UNIT PRICE FOR EACH PREEMPTION IN PLACE AND FULLY OPERATION AS SHOWN IN THE PLANS, EXCEPT FOR THOSE ITEMS BID SEPARATELY.

THE FOLLOWING QUANTITY HAS BEEN CARRIED TO THE GENERAL SUMMARY:

ITEM 633 - PREEMPTION, AS PER PLAN 5 EACH

CALCULATED JMK
CHECKED WLC

TRAFFIC CONTROL NOTES

WALNUT & CHERRY COMPLETE STREET BIKE LANES

R:\Stark\SARTA\Task 3 Canton\STA\91592\signals\sheets\91592CN004.dgn 6/29/2012 1:38:04 PM bill

SHEET NO.	630 GROUND MOUNTED SUPPORT, NO. 3 POST	630 STREET NAME SIGN SUPPORT, NO. 3 POST	630 SIGN HANGER ASSEMBLY, MAST ARM	630 SIGN SUPPORT ASSEMBLY, POLE MOUNTED	630 SIGN, FLAT SHEET	630 SIGN, PERMANENT OVERLAY, AS PER PLAN	630 SIGN, DOUBLE FACED, STREET NAME	630 SIGN, STREET NAME	630 REMOVAL OF GROUND MOUNTED SIGN AND STORAGE, AS PER PLAN	630 REMOVAL OF GROUND MOUNTED SIGN AND REERECTION	630 REMOVAL OF GROUND MOUNTED POST SUPPORT AND STORAGE, AS PER PLAN	630 REMOVAL OF POLE MOUNTED SIGN AND STORAGE, AS PER PLAN	630 REMOVAL OF POLE MOUNTED SIGN AND REERECTION	631 INTERNALLY ILLUMINATED FIXED MESSAGE SIGN, AS PER PLAN
	FT.	FT.	EACH	EACH	SQ. FT.	SQ. FT.	EACH	EACH	EACH	EACH	EACH	EACH	EACH	EACH
52	112.1		4	7	116.3				6		2	1		
53	133.6	44.1		5	122.0		4		22	1	14	4		
54	155.0	50.3		6	147.3		3		10		6	4	1	
55	192.1		4	5	185.3			1	15		9	2		
56	102.8		11	12	108.0			3	14	2	7	11		
57	50.7	16.8		14	107.5		2		7		4	4		
58	134.9	44.7	12	9	138.8		4	3	16		14	11	3	
59	0.0	0.0	0	0	0.0		0	0	0		0	0	0	
60	109.9	17.8	2	15	131.3		4		5	1	5	4	2	7
61	100.0	44.7	5	17	176.9	8.5	4		2		2	20		
62	81.2			9	80.4				7		6	6		
TOTALS CARRIED TO GENERAL SUMMARY	1172.2	218.3	38	99	1313.6	8.5	21	7	104	4	69	67	6	7

SHEET NO.	644 LANE LINE	644 CENTER LINE (DOUBLE SOLID)	644 CHANNELIZING LINE	644 STOP LINE	644 CROSSWALK LINE	644 TRANSVERSE/DIAGONAL LINE	644 PARKING LOT STALL MARKING	644 LANE ARROW	644 DOTTED LINE, 4" (WHITE)	644 DOTTED LINE, 4" (YELLOW)	644 BIKE LANE SYMBOL MARKING	644 PAVEMENT MARKING, MISC.: WORD ON PAVEMENT, 36"	644 PAVEMENT MARKING, MISC.: GREEN PAINTED LANE	644 PAVEMENT MARKING, MISC.: GREEN BIKE BOX
	MILE	MILE	FT	FT	FT	FT	FT	EACH	FT	FT	EACH	EACH	SQ FT	SQ FT
63	0.03	0.03	158	5				5			2	1		
64	0.09	0.09	464	28	110			8	208	34	8		391	
65	0.09	0.09	500					5			5			
66	0.08	0.09	380	85	389			9	386	51	9		474	226
67	0.09	0.09	500					5			5			
68	0.09	0.09	525					4	300		4			
69	0.07	0.07	540	90	364	229	370							
70								11	483	98	9		968	100
71	0.09	0.08	704	85	353	230	258							
72								13	388	85	9		850	101
73	0.08	0.07	631	78	98	415	387							
74								12	226	42	8		422	
75	0.03	0.07	957	115	517	115	224							
76								16	386	51	6		513	
77			214			311	281	2						
TOTALS CARRIED TO GENERAL SUMMARY	0.76	0.78	5573	486	1831	1300	1520	90	2377	361	65	1	3618	427

CALCULATED JMK
CHECKED WLC

SIGNING AND PAVEMENT MARKING SUBSUMMARY

WALNUT & CHERRY
COMPLETE STREET
BIKE LANES

R:\Stark\SARTA\Task 3 Canton\STA91592\traffic\sheets\91592TS001.dgn 6/28/2012 9:22:09 AM jroth

SIGNING ESTIMATED QUANTITIES

SHEET NO.	REFERENCE NO.	LOCATION	STATION	SIDE	CODE	SIZE (INCHES)	630 GROUND MOUNTED SUPPORT, NO. 3 POST (FT.)	630 SIGN HANGER ASSEMBLY, MAST ARM (EACH)	630 SIGN SUPPORT ASSEMBLY, POLE MOUNTED (EACH)	630 SIGN, FLAT SHEET (SQ. FT.)	630 REMOVAL OF GROUND MOUNTED SIGN AND STORAGE, AS PER PLAN (EACH)	630 REMOVAL OF GROUND MOUNTED POST SUPPORT AND STORAGE, AS PER PLAN (EACH)	630 REMOVAL OF POLE MOUNTED SIGN AND STORAGE, AS PER PLAN (EACH)
78	S-1	WALNUT AVENUE	158+20	RT.	R3-17-30	30" X 24"	12.6			5.0			
					R3-17A-30	30" X 12"				2.5			
78	S-2	WALNUT AVENUE	158+56	LT.	W6-3-36	36" X 36"	14.8			9.0			
					W16-9P-24	24" X 12"				2.0			
78	S-3	WALNUT AVENUE	158+56 (ON POLE)	RT.	W6-3-36	36" X 36"	14.8			9.0			
					W16-9P-24	24" X 12"				2.0			
78	S-4	WALNUT AVENUE	159+10	RT.	R3-7R-30	30" X 30"	13.0			6.3			
78	S-5	WALNUT AVENUE	(ON MAST ARM FACING EAST)		R6-2L-24	24" X 30"		1		5.0			
					SPECIAL	24" X 18"		1		3.0			
78	S-6	WALNUT AVENUE	(ON MAST ARM FACING WEST)		R6-2R-24	24" X 30"		1		5.0			
					SPECIAL	24" X 18"		1		3.0			
78	S-7	WALNUT AVENUE	160+33 (ON POLE)	LT.	R6-7-24	24" X 30"			1	5.0			
					R6-6-24	24" X 30"			1	5.0			
					R3-17-30	30" X 24"			1	5.0			
					R3-17B-30	30" X 12"			1	2.5			
78	S-8	WALNUT AVENUE	160+32	LT.	SPECIAL	24" X 30"	13.0			5.0			
78	S-9	WALNUT AVENUE	160+50	RT.	R6-7-24	24" X 30"	14.6			5.0			
					SPECIAL	30" X 30"				6.3			
78	S-10	WALNUT AVENUE	160+94 (ON POLE)	RT.	M3-3-24	24" X 12"			1	2.0			
					M1-5-24-2	24" X 24"				4.0			
78	S-11	WALNUT AVENUE	161+94 (ON POLE)	LT.	R7-9-12	12" X 18"			1	1.5			
78	S-12	WALNUT AVENUE	161+09 (ON POLE)	LT.								1	
78	S-13	WALNUT AVENUE	161+56	RT.							2	1	
78	S-14	WALNUT AVENUE	161+74 (ON POLE)	RT.	R7-9-12	12" X 18"			1	1.5			
78	S-15	WALNUT AVENUE	161+80	LT.	SPECIAL	24" X 30"	16.2			5.0			
					R6-2R-24	24" X 30"				5.0			
					SPECIAL	24" X 18"				3.0			
78	S-16	WALNUT AVENUE	161+81	LT.							4	1	
78	S-17	WALNUT AVENUE	161+96	LT.	SPECIAL	30" X 18"	13.1			3.8			
					SPECIAL	30" X 24"				5.0			
TOTALS CARRIED TO SUB-SUMMARY							112.1	4	7	116.3	6	2	1

CALCULATED JMK
CHECKED WLC

WALNUT & CHERRY COMPLETE STREET BIKE LANES

R:\Stark\SARTA\Task 3 Canton\STA\91592\traffic\sheets\91592TQ001.dgn 6/28/2012 8:58:36 AM jroth

SHEET NO.	REFERENCE NO.	LOCATION	STATION	SIDE	CODE	SIZE (INCHES)	630 GROUND MOUNTED SUPPORT, NO. 3 POST FT.	630 STREET NAME SIGN SUPPORT, NO. 3 POST FT.	630 SIGN SUPPORT ASSEMBLY, POLE MOUNTED EACH	630 SIGN, FLAT SHEET SQ. FT.	630 SIGN, DOUBLE FACED, STREET NAME EACH	630 REMOVAL OF GROUND MOUNTED SIGN AND STORAGE, AS PER PLAN EACH	630 REMOVAL OF GROUND MOUNTED SIGN AND REERECTION EACH	630 REMOVAL OF GROUND MOUNTED POST SUPPORT AND STORAGE, AS PER PLAN EACH	630 REMOVAL OF POLE MOUNTED SIGN AND STORAGE, AS PER PLAN EACH
79	S-18	WALNUT AVENUE	162+01 (ON POLE)	LT.	R7-9-12	12" X 18"			1	1.5					
79	S-19	WALNUT AVENUE	162+01 (ON POLE)	LT.											2
79	S-20	WALNUT AVENUE	162+05	RT.								4		1	
79	S-21	WALNUT AVENUE	162+05	RT.	D3-1-30	30" X 6"		16.8			1				
					R1-1-30	30" X 30"				6.3					
					R6-2R-24	24" X 30"				5.0					
					SPECIAL	24" X 18"				3.0					
79	S-22	WALNUT AVENUE	162+12	RT.	SPECIAL	24" X 24"	12.5			4.0					
79	S-23	WALNUT AVENUE	162+06	LT.								2		1	
79	S-24	WALNUT AVENUE	163+00	RT.			13.6						1	1	
					R7-9-12	12" X 18"				1.5					
79	S-25	WALNUT AVENUE	162+52 (ON POLE)	RT.											1
79	S-26	WALNUT AVENUE	NOT USED												
79	S-27	WALNUT AVENUE	162+81	LT.								2		1	
79	S-28	WALNUT AVENUE	163+16 (ON POLE)	LT.	R7-9-12	12" X 18"			1	1.5					
79	S-29	WALNUT AVENUE	164+27 (ON POLE)	LT.	R3-17-30	30" X 24"			1	5.0					
79	S-30	WALNUT AVENUE	164+27	LT.	R3-17-30	30" X 24"	12.5			5.0					
79	S-31	WALNUT AVENUE	164+69	LT.								1		1	
79	S-32	WALNUT AVENUE	165+22 (ON POLE)	LT.											1
79	S-33	WALNUT AVENUE	165+22 (ON POLE)	LT.	R6-2R-24	24" X 30"			1	5.0					
					SPECIAL	24" X 18"			1	3.0					
79	S-34	WALNUT AVENUE	165+32	RT.								1		1	
79	S-35	WALNUT AVENUE	165+32	RT.	D3-1-24	24" X 6"		16.8			1				
					R1-1-30	30" X 30"				6.3					
					R6-2R-24	24" X 30"				5.0					
					SPECIAL	24" X 18"				3.0					
79	S-36	WALNUT AVENUE	165+73	LT.								1		1	
79	S-37	WALNUT AVENUE	165+73	LT.	R7-9-12	12" X 18"	12.0			1.5					
79	S-38	WALNUT AVENUE	165+39	RT.	R7-9-12	12" X 18"	12.0			1.5					
79	S-39	WALNUT AVENUE	165+39	RT.								1		1	
79	S-40	WALNUT AVENUE	165+90	LT.								1		1	
79	S-41	WALNUT AVENUE	165+90	LT.	R5-1-30	30" X 30"	13.6			6.3					
					SPECIAL	24" X 18"				3.0					
79	S-42	WALNUT AVENUE	165+92	RT.	D3-1-24	24" X 6"		10.6			1				
					D3-1-18	18" X 6"					1				
79	S-43	WALNUT AVENUE	165+92	RT.								3		1	
79	S-44	WALNUT AVENUE	166+04	LT.								1		1	
79	S-45	WALNUT AVENUE	166+04	LT.	R1-1-30	30" X 30"	16.2			6.3					
					R6-2L-24	24" X 30"				5.0					
					SPECIAL	24" X 18"				3.0					
					R6-2R-24	24" X 30"				5.0					
					SPECIAL	24" X 18"				3.0					
79	S-46	WALNUT AVENUE	166+29	RT.	R1-1-30	30" X 30"	16.2			6.3					
					R6-2R-24	24" X 30"				5.0					
					R6-2L-24	24" X 30"				5.0					
					SPECIAL	24" X 18"				3.0					
					SPECIAL	24" X 18"				3.0					
79	S-47	WALNUT AVENUE	166+35	RT.								3		1	
79	S-48	WALNUT AVENUE	166+37	LT.								1		1	
79	S-49	WALNUT AVENUE	166+36	LT.	SPECIAL	30" X 24"	13.1			5.0					
					SPECIAL	30" X 18"				3.8					
79	S-50	WALNUT AVENUE	166+91	RT.	R7-9-12	12" X 18"	12.0			1.5					
79	S-51	WALNUT AVENUE	166+91	RT.								1		1	
TOTALS CARRIED TO SUB-SUMMARY							133.6	44.1	5	122.0	4	22	1	14	4

CALCULATED JMK
CHECKED WLC

SIGNING ESTIMATED QUANTITIES

WALNUT & CHERRY
COMPLETE STREET
BIKE LANES

R:\Stark\SARTA\Task 3 Canton\STA\91592\traffic\sheets\91592TOOD2.dgn 6/29/2012 1:16:38 PM jroth

SHEET NO.	REFERENCE NO.	LOCATION	STATION	SIDE	CODE	SIZE (INCHES)	630 GROUND MOUNTED SUPPORT, NO. 3 POST FT.	630 STREET NAME SIGN SUPPORT, NO. 3 POST FT.	630 SIGN SUPPORT ASSEMBLY, POLE MOUNTED EACH	630 SIGN, FLAT SHEET SQ. FT.	630 SIGN, DOUBLE FACED, STREET NAME EACH	630 REMOVAL OF GROUND MOUNTED SIGN AND STORAGE, AS PER PLAN EACH	630 REMOVAL OF GROUND MOUNTED POST SUPPORT AND STORAGE, AS PER PLAN EACH	630 REMOVAL OF POLE MOUNTED SIGN AND STORAGE, AS PER PLAN EACH	630 REMOVAL OF POLE MOUNTED SIGN AND RERECTION EACH
80	S-52	WALNUT AVENUE	167+47	LT.	D3-1-24	24" X 6"		16.8			1				
					R1-1-30	30" X 30"				6.3					
					R6-2L-24	24" X 30"				5.0					
					SPECIAL	24" X 18"				3.0					
80	S-53	WALNUT AVENUE	167+64	RT.	R6-2L-24	24" X 30"	13.6			5.0					
					SPECIAL	24" X 18"				3.0					
80	S-54	WALNUT AVENUE	167+64	LT.	SPECIAL	30" X 18"	13.1			3.8					
					SPECIAL	30" X 24"				5.0					
80	S-55	WALNUT AVENUE	167+69 (ON POLE)	LT.	R7-9-12	12" X 18"			1	1.5					
80	S-56	WALNUT AVENUE	167+69 (ON POLE)	LT.										1	
80	S-57	WALNUT AVENUE	168+25	RT.	R3-17-30	30" X 24"	12.5			5.0					
80	S-58	WALNUT AVENUE	168+25	LT.	R3-17-30	30" X 24"	12.5			5.0					
80	S-59	WALNUT AVENUE	168+68	LT.								3	1		
80	S-60	WALNUT AVENUE	168+68	LT.	R1-1-30	30" X 30"	16.2			6.3					
					R6-2R-24	24" X 30"				5.0					
					R6-2L-24	24" X 30"				5.0					
					SPECIAL	24" X 18"				3.0					
					SPECIAL	24" X 18"				3.0					
80	S-61	WALNUT AVENUE	168+80	RT.	D3-1-30	30" X 6"		16.8			1				
					R1-1-30	30" X 30"				6.3					
					R6-2R-24	24" X 30"				5.0					
					R6-2L-24	24" X 30"				5.0					
					SPECIAL	24" X 18"				3.0					
					SPECIAL	24" X 18"				3.0					
80	S-62	WALNUT AVENUE	168+86 (ON POLE)	LT.	SPECIAL	30" X 18"			1	3.8					
					SPECIAL	30" X 24"			1	5.0					
80	S-63	WALNUT AVENUE	168+86 (ON POLE)	LT.										1	1
80	S-64	WALNUT AVENUE	169+02	LT.	R7-9-12	12" X 18"	12.0			1.5					
80	S-65	WALNUT AVENUE	169+02	LT.								1	1		
80	S-66	WALNUT AVENUE	169+70	RT.	R7-9-12	12" X 18"	12.0			1.5					
80	S-67	WALNUT AVENUE	169+85	LT.	D3-1-24	24" X 6"		16.8			1				
					R1-1-30	30" X 30"				6.3					
					R6-2L-24	24" X 30"				5.0					
					SPECIAL	24" X 18"				3.0					
80	S-68	WALNUT AVENUE	169+85	LT.								3	1		
80	S-69	WALNUT AVENUE	169+93 (ON POLE)	RT.										1	
80	S-70	WALNUT AVENUE	169+93 (ON POLE)	RT.	R2-1-24	24" X 30"			1	5.0					
80	S-71	WALNUT AVENUE	170+00	RT.	R6-2L-24	24" X 30"	13.6			5.0					
					SPECIAL	24" X 18"				3.0					
80	S-72	WALNUT AVENUE	170+05 (ON POLE)	LT.	SPECIAL	30" X 18"			1	3.8					
					SPECIAL	30" X 24"			1	5.0					
80	S-73	WALNUT AVENUE	170+05 (ON POLE)	LT.										1	
80	S-74	WALNUT AVENUE	170+05 (ON POLE)	LT.	R6-2R-24	24" X 30"	13.6			5.0					
					SPECIAL	24" X 18"				3.0					
80	S-75	WALNUT AVENUE	170+47	LT.	R7-9-12	12" X 18"	12.0			1.5					
80	S-76	WALNUT AVENUE	170+47	LT.								1	1		
80	S-77	WALNUT AVENUE	171+82	LT.								1	1		
80	S-78	WALNUT AVENUE	171+82	LT.	R7-9-12	12" X 18"	12.0			1.5					
80	S-79	WALNUT AVENUE	171+93	RT.	R7-9-12	12" X 18"	12.0			1.5					
80	S-80	WALNUT AVENUE	171+94	RT.								1	1		
TOTALS CARRIED TO SUB-SUMMARY							155.0	50.3	6	147.3	3	10	6	4	1

CALCULATED JMK
CHECKED WLC

SIGNING ESTIMATED QUANTITIES

WALNUT & CHERRY COMPLETE STREET BIKE LANES

R:\Stark\SARTA\Task 3 Canton\STA\91592\traffic\sheets\91592TQ003.dgn 6/28/2012 8:59:47 AM jroth

SHEET NO.	REFERENCE NO.	LOCATION	STATION	SIDE	CODE	SIZE (INCHES)	630 GROUND MOUNTED SUPPORT, NO. 3 POST FT.	630 SIGN HANGER ASSEMBLY, MAST ARM EACH	630 SIGN SUPPORT ASSEMBLY, POLE MOUNTED EACH	630 SIGN, FLAT SHEET SQ. FT.	630 SIGN, STREET NAME EACH	630 REMOVAL OF GROUND MOUNTED SIGN AND STORAGE, AS PER PLAN EACH	630 REMOVAL OF GROUND MOUNTED POST SUPPORT AND STORAGE, AS PER PLAN EACH	630 REMOVAL OF POLE MOUNTED SIGN AND STORAGE, AS PER PLAN EACH
81	S-81	WALNUT AVENUE	172+08	LT.								2	1	
81	S-82	WALNUT AVENUE	172+08	LT.	R1-1-30	30" X 30"	16.2			6.3				
					R6-2L-24	24" X 30"				5.0				
					SPECIAL	24" X 18"				3.0				
81	S-83	WALNUT AVENUE	172+27	RT.	R6-2L-24	24" X 30"	13.6			5.0				
					SPECIAL	24" X 18"				3.0				
81	S-84	WALNUT AVENUE	172+27 (ON POLE)	LT.	SPECIAL	30" X 24"			1	5.0				
					SPECIAL	30" X 18"				3.8				
81	S-85	WALNUT AVENUE	172+78	LT.								1	1	
81	S-86	WALNUT AVENUE	172+78	LT.	R7-9-12	12" X 18"	12.0			1.5				
81	S-87	WALNUT AVENUE	172+88 (ON POLE)	RT.	R3-17-30	30" X 24"			1	5.0				
81	S-88	WALNUT AVENUE	173+15 (ON POLE)	LT.	R3-17-30	30" X 24"			1	5.0				
81	S-89	WALNUT AVENUE	173+20	LT.	R1-1-30	30" X 30"	16.2			6.3				
					R6-2L-24	24" X 30"				5.0				
					R6-2R-24	24" X 30"				5.0				
					SPECIAL	24" X 18"				3.0				
					SPECIAL	24" X 18"				3.0				
81	S-90	WALNUT AVENUE	173+22	LT.								3	1	
81	S-91	WALNUT AVENUE	173+55	RT.	R6-2L-24	24" X 30"	13.6			5.0				
					R6-2R-24	24" X 30"				5.0				
					SPECIAL	24" X 18"				3.0				
					SPECIAL	24" X 18"				3.0				
81	S-92	WALNUT AVENUE	173+36	LT.	SPECIAL	30" X 24"	13.1			5.0				
					SPECIAL	30" X 18"				3.8				
81	S-93	WALNUT AVENUE	173+80	LT.								1	1	
81	S-94	WALNUT AVENUE	173+80	LT.	R7-9-12	12" X 18"	12.0			1.5				
81	S-95	WALNUT AVENUE	174+15	RT.								1	1	
81	S-96	WALNUT AVENUE	174+27	LT.								3	1	
81	S-97	WALNUT AVENUE	174+27	LT.	R1-1-30	30" X 30"	16.2			6.3				
					R6-2L-24	24" X 30"				5.0				
					R6-2R-24	24" X 30"				5.0				
					SPECIAL	24" X 18"				3.0				
					SPECIAL	24" X 18"				3.0				
81	S-98	WALNUT AVENUE	174+45	RT.	R6-2L-24	24" X 30"	13.6			5.0				
					SPECIAL	24" X 18"				3.0				
81	S-99	WALNUT AVENUE	174+48 (ON POLE)	LT.	SPECIAL	30" X 24"			1	5.0				
					SPECIAL	30" X 18"			1	3.8				
81	S-100	WALNUT AVENUE	174+72	RT.	SPECIAL	30" X 30"	13.0			6.3				
81	S-101	WALNUT AVENUE	175+01	LT.	R7-9-12	12" X 18"	12.0			1.5				
81	S-102	WALNUT AVENUE	175+01	LT.								2	1	
81	S-103	WALNUT AVENUE	175+30	LT.	R5-1-30	30" X 30"	13.6			6.3				
					SPECIAL	24" X 18"				3.0				
81	S-104	WALNUT AVENUE	175+30	LT.								1	1	
81	S-105	WALNUT AVENUE	175+26	RT.	R5-1-30	30" X 30"	13.6			6.3				
					SPECIAL	24" X 18"				3.0				
					SPECIAL	24" X 30"				5.0				
81	S-106	WALNUT AVENUE	175+27	RT.								1	1	
81	S-107	WALNUT AVENUE	175+50	LT.	R6-2L-24	24" X 30"	13.6			5.0				
					R6-2R-24	24" X 30"				5.0				
					SPECIAL	24" X 18"				3.0				
					SPECIAL	24" X 18"				3.0				
81	S-108	WALNUT AVENUE	(ON MAST ARM FACING EAST)											2
					D3-1-60	60" X 14"		2			1			
					R6-2L-24	24" X 30"		1		5.0				
					SPECIAL	24" X 18"		1		3.0				
TOTALS CARRIED TO SUB-SUMMARY							192.1	4	5	185.3	1	15	9	2

CALCULATED JMK
CHECKED WLC

SIGNING ESTIMATED QUANTITIES

WALNUT & CHERRY
COMPLETE STREET
BIKE LANES

R:\Stark\SARTA\Task 3 Canton\STA\91592\traffic\sheets\91592TQ004.dgn 6/28/2012 9:00:07 AM jroth

SHEET NO.	REFERENCE NO.	LOCATION	STATION	SIDE	CODE	SIZE (INCHES)	630 GROUND MOUNTED SUPPORT, NO. 3 POST FT.	630 SIGN HANGER ASSEMBLY, MAST ARM EACH	630 SIGN SUPPORT ASSEMBLY, POLE MOUNTED EACH	630 SIGN, FLAT SHEET SQ. FT.	630 SIGN, STREET NAME EACH	630 REMOVAL OF GROUND MOUNTED SIGN AND STORAGE, AS PER PLAN EACH	630 REMOVAL OF GROUND MOUNTED SIGN AND REERECTION EACH	630 REMOVAL OF GROUND MOUNTED POST SUPPORT AND STORAGE, AS PER PLAN EACH	630 REMOVAL OF POLE MOUNTED SIGN AND STORAGE, AS PER PLAN EACH
TP4	S-109	WALNUT AVENUE	175+49	LT.								2		1	
TP4	S-110	WALNUT AVENUE	(ON MAST ARM FACING WEST)												2
					R6-2R-24	24" X 30"		1		5.0					
					SPECIAL	24" X 18"		1		3.0					
					R10-11-24	24" X 30"		1		5.0					
					D3-1-60	60" X 14"		2			1				
TP4	S-111	WALNUT AVENUE	176+07 (ON POLE)	RT.	R6-2L-24	24" X 30"			1	5.0					
					R6-2R-24	24" X 30"			1	5.0					
					SPECIAL	24" X 18"			1	3.0					
					SPECIAL	24" X 18"			1	3.0					
TP4	S-112	WALNUT AVENUE	176+04	RT.								2		1	
TP4	S-113	WALNUT AVENUE	176+12 (ON POLE)	LT.	R7-9-12	12" X 18"			1	1.5					
TP4	S-114	WALNUT AVENUE	176+12 (ON POLE)	LT.											2
TP4	S-115	WALNUT AVENUE	(ON MAST ARM FACING NORTH)												1
					D3-1-30	30" X 14"		2			1				
					D3-1-30	30" X 14"		2			1				
					SPECIAL	36" X 30"		1		7.5					
					R10-11-24	24" X 30"		1		5.0					
TP4	S-116	WALNUT AVENUE	176+30	RT.	SPECIAL	24" X 24"	12.5			4.0					
TP4	S-117	WALNUT AVENUE	176+50	LT.	SPECIAL	24" X 30"	13.0			5.0					
82	S-118	WALNUT AVENUE	177+62	LT.								2		1	
82	S-119	WALNUT AVENUE	177+79	LT.								2			
82	S-120	WALNUT AVENUE	177+75	RT.	M3-3-24	24" X 12"	12.6			2.0					
					M1-5-24-2	24" X 24"				4.0					
82	S-121	WALNUT AVENUE	177+75	RT.								2		1	
82	S-122	WALNUT AVENUE	177+98	LT.	SPECIAL	30" X 18"	13.1			3.8					
					SPECIAL	30" X 24"				5.0					
82	S-122A	WALNUT AVENUE	178+40	LT.	R7-9-12	12" X 18"	12.0			1.5					
82	S-123	WALNUT AVENUE	178+05 (ON POLE)	LT.											1
82	S-124	WALNUT AVENUE	178+05 (ON POLE)	LT.	R6-2R-24	24" X 30"			1	5.0					
					SPECIAL	24" X 18"			1	3.0					
82	S-125	WALNUT AVENUE	178+10	LT.								1		1	
82	S-126	WALNUT AVENUE	178+52 (ON POLE)	RT.											1
82	S-127	WALNUT AVENUE	178+52 (ON POLE)	RT.	R7-9-12	12" X 18"			1	1.5					
82	S-128	WALNUT AVENUE	179+66 (ON POLE)	LT.	R7-9-12	12" X 18"			1	1.5					
					R3-17-30	30" X 24"			1	5.0					
82	S-129	WALNUT AVENUE	179+66 (ON POLE)	LT.											2
82	S-130	WALNUT AVENUE	180+25	RT.	R2-1-24	24" X 30"	14.1			5.0					
					R3-17-30	30" X 24"				5.0					
82	S-131	WALNUT AVENUE	180+95 (ON POLE)	LT.											1
82	S-132	WALNUT AVENUE	180+95 (ON POLE)	LT.	R7-9-12	12" X 18"			1	1.5					
82	S-133	WALNUT AVENUE	181+13	RT.	R7-9-12	12" X 18"	12.0			1.5					
82	S-134	WALNUT AVENUE	181+14	RT.								2		1	
82	S-135	WALNUT AVENUE	181+98 (ON POLE)	LT.											1
82	S-136	WALNUT AVENUE	181+98 (ON POLE)	LT.	R7-9-12	12" X 18"			1	1.5					
82	S-137	WALNUT AVENUE	181+71	RT.	R5-1-30	30" X 30"	13.6			6.3					
					SPECIAL	24" X 18"				3.0					
82	S-138	WALNUT AVENUE	181+72	RT.								1	2	1	
TOTALS CARRIED TO SUB-SUMMARY							102.8	11	12	108.0	3	14	2	7	11

CALCULATED JMK
CHECKED WLC

SIGNING ESTIMATED QUANTITIES

WALNUT & CHERRY
COMPLETE STREET
BIKE LANES

R:\Stark\SARTA\Task 3 Canton\STA\91592\traffic\sheets\91592TQ005.dgn 6/28/2012 9:00:53 AM jrath

SHEET NO.	REFERENCE NO.	LOCATION	STATION	SIDE	CODE	SIZE (INCHES)	630 GROUND MOUNTED SUPPORT, NO. 3 POST FT.	630 STREET NAME SIGN SUPPORT, NO. 3 POST FT.	630 SIGN SUPPORT ASSEMBLY, POLE MOUNTED EACH	630 SIGN, FLAT SHEET SQ. FT.	630 SIGN, DOUBLE FACED, STREET NAME EACH	630 REMOVAL OF GROUND MOUNTED SIGN AND STORAGE, AS PER PLAN EACH	630 REMOVAL OF GROUND MOUNTED POST SUPPORT AND STORAGE, AS PER PLAN EACH	630 REMOVAL OF POLE MOUNTED SIGN AND STORAGE, AS PER PLAN EACH
83	S-139	WALNUT AVENUE	182+01	LT.	D3-1-24	24" X 6"		16.8			1			
					R1-1-30	30" X 30"				6.3				
					R6-2L-24	24" X 30"				5.0				
					R6-2R-24	24" X 30"				5.0				
					SPECIAL	24" X 18"				3.0				
					SPECIAL	24" X 18"				3.0				
83	S-140	WALNUT AVENUE	182+04	LT.								3	1	
83	S-141	WALNUT AVENUE	182+18	LT.								2	1	
83	S-142	WALNUT AVENUE	182+21	LT.	R5-1-30	30" X 30"	13.1			6.3				
					SPECIAL	30" X 24"				5.0				
					SPECIAL	30" X 18"				3.8				
83	S-143	WALNUT AVENUE	182+29	RT.	R6-2L-24	24" X 30"	13.6			5.0				
					R6-2R-24	24" X 30"				5.0				
					SPECIAL	24" X 18"				3.0				
					SPECIAL	24" X 18"				3.0				
83	S-144	WALNUT AVENUE	183+12 (ON POLE)	LT.										2
83	S-145	WALNUT AVENUE	182+86	LT.	R7-9-12	12" X 18"	12.0			1.5				
83	S-146	WALNUT AVENUE	183+12 (ON POLE)	LT.	D3-1-18	18" X 6"			1		1			
					R1-1-30	30" X 30"			1	6.3				
					R6-2L-24	24" X 30"			1	5.0				
					R6-2R-24	24" X 30"			1	5.0				
					SPECIAL	24" X 18"			1	3.0				
					SPECIAL	24" X 18"			1	3.0				
83	S-147	WALNUT AVENUE	182+86	RT.	R7-9-12	12" X 18"	12.0			1.5				
83	S-148	WALNUT AVENUE	183+23	RT.								1	1	
83	S-149	WALNUT AVENUE	183+34 (ON POLE)	RT.										1
83	S-150	WALNUT AVENUE	183+34 (ON POLE)	RT	R6-2R-24	24" X 30"			1	5.0				
					R6-2L-24	24" X 30"			1	5.0				
					SPECIAL	24" X 18"			1	3.0				
					SPECIAL	24" X 18"			1	3.0				
83	S-151	WALNUT AVENUE	184+69	LT.								1	1	
83	S-152	WALNUT AVENUE	184+60 (ON POLE)	LT.	R7-9-12	12" X 18"			1	1.5				
83	S-153	WALNUT AVENUE	185+33 (ON POLE)	RT.	R3-17-30	30" X 24"			1	5.0				
83	S-154	WALNUT AVENUE	185+32 (ON POLE)	LT.	R3-17-30	30" X 24"			1	5.0				
83	S-155	WALNUT AVENUE	186+06 (ON POLE)	LT.										1
83	S-156	WALNUT AVENUE	186+06 (ON POLE)	LT.	R7-9-12	12" X 18"			1	1.5				
TOTALS CARRIED TO GENERAL SUMMARY							50.7	16.8	14	107.5	2	7	4	4

CALCULATED JMK
CHECKED WLC

SIGNING ESTIMATED QUANTITIES

WALNUT & CHERRY COMPLETE STREET BIKE LANES

R:\Stark\SARTA\Task 3 Canton\STA\91592\traffic\sheets\91592TQ006.dgn 6/28/2012 9:01:16 AM jroth

SHEET NO.	REFERENCE NO.	LOCATION	STATION	SIDE	CODE	(INCHES)	630 GROUND MOUNTED SUPPORT, NO. 3 POST FT.	630 STREET NAME SIGN SUPPORT, NO. 3 POST FT.	630 SIGN HANGER ASSEMBLY, MAST ARM EACH	630 SIGN SUPPORT ASSEMBLY, POLE MOUNTED EACH	630 SIGN, FLAT SHEET SQ. FT.	630 SIGN, DOUBLE FACED, STREET NAME EACH	630 SIGN, STREET NAME EACH	630 REMOVAL OF GROUND MOUNTED SIGN AND STORAGE, AS PER PLAN EACH	630 REMOVAL OF GROUND MOUNTED POST SUPPORT AND STORAGE, AS PER PLAN EACH	630 REMOVAL OF POLE MOUNTED SIGN AND STORAGE, AS PER PLAN EACH	630 REMOVAL OF POLE MOUNTED SIGN AND REERECTION EACH			
84	S-157	WALNUT AVENUE	NOT USED																	
84	S-158	WALNUT AVENUE	187+87	LT.	R6-2L-24	24" X 30"	16.2				5.0									
					SPECIAL	24" X 18"					3.0									
84	S-158A	WALNUT AVENUE	188+27	LT.	R6-2L-24	24" X 30"	16.2				5.0									
					SPECIAL	24" X 18"					3.0									
84	S-159	WALNUT AVENUE	187+65	RT.	D3-1-24	24" X 6"		31.5				1								
					D3-1-18	18" X 6"						1								
					R6-2R-24	24" X 30"					5.0									
					SPECIAL	42" X 30"					8.8									
84	S-160	WALNUT AVENUE	187+68	RT.										2	1					
84	S-161	WALNUT AVENUE	(ON MAST ARM FACING EAST)													2				
84	S-162	WALNUT AVENUE	188+26	RT.	R6-2L-24	24" X 30"	13.6				5.0									
					SPECIAL	24" X 18"					3.0									
84	S-163	WALNUT AVENUE	188+32	LT.	D3-1-24	24" X 6"		13.2				1								
					D3-1-18	18" x 6"						1								
					R6-2R-24	24" X 30"					5.0									
84	S-164	WALNUT AVENUE	188+32	LT.										1	1					
84	S-165	WALNUT AVENUE	188+37 (ON POLE)	RT.												2				
84	S-166	WALNUT AVENUE	(ON MAST ARM FACING NORTH)													2				
84	S-167	WALNUT AVENUE	188+54	RT.										1	1					
84	S-168	WALNUT AVENUE	188+84	LT.	R7-9-12	12" X 18"	12.0				1.5									
84	S-169	WALNUT AVENUE	188+58	RT.	SPECIAL	24" X 30"	13.0				5.0									
84	S-170	WALNUT AVENUE	188+53	LT.										1	1					
84	S-171	WALNUT AVENUE	189+25	RT.										1	1					
84	S-172	WALNUT AVENUE	188+97	LT.										1	1					
84	S-173	WALNUT AVENUE	189+64	RT.										1	1					
84	S-174	WALNUT AVENUE	188+57	LT.	SPECIAL	24" X 30"	13.0				5.0									
84	S-175	WALNUT AVENUE	189+36 (ON POLE)	LT.	R7-9-12	12" X 18"				1	1.5									
					R3-17-30	30" X 24"				1	5.0									
84	S-176	WALNUT AVENUE	189+46	LT.										1	1					
84	S-177	WALNUT AVENUE	190+05	RT.										1	1					
84	S-178	WALNUT AVENUE	190+09	RT.	SPECIAL	24" X 30"	13.0				5.0									
84	S-179	WALNUT AVENUE	190+15	LT.										1	1					
84	S-180	WALNUT AVENUE	190+45	LT.										1	1					
84	S-181	WALNUT AVENUE	190+35 (ON POLE)	LT.	R6-2R-24	24" X 30"				1	5.0									
					SPECIAL	24" X 18"				1	3.0									
84	S-182	WALNUT AVENUE	190+35 (ON POLE)	RT.													1			
					R6-2L-24	24" X 30"				1	5.0									
					SPECIAL	24" X 30"				1	5.0									
84	S-183	WALNUT AVENUE	(ON MAST ARM FACING WEST)													2				
					R6-2R-24	24" X 30"			1		5.0									
					SPECIAL	24" X 18"			1		3.0									
					R10-11-24	24" X 30"			1		5.0									
					D3-1-60	60" X 14"			2				1							
84	S-184	WALNUT AVENUE	190+95 (ON POLE)	LT.												1				
84	S-185	WALNUT AVENUE	191+10	RT.										1	1					
84	S-186	WALNUT AVENUE	190+85 (ON POLE)	RT.	R6-2R-24	24" X 30"				1	5.0									
					SPECIAL	24" X 18"				1	3.0									
84	S-187	WALNUT AVENUE	191+15	RT.	SPECIAL	24" X 30"	13.0				5.0									
84	S-188	WALNUT AVENUE	190+95 (ON POLE)	LT.	R6-2L-24	24" X 30"				1	5.0									
84	S-189	WALNUT AVENUE	(ON MAST ARM FACING NORTH)													2				
					R6-2L-24	24" X 30"			1		5.0									
					D3-1-30	30" X 14"			2				1							
					D3-1-30	30" X 14"			2				1							
					SPECIAL	36" X 30"			1		7.5									
					R10-11-24	24" X 30"			1		5.0									
84	S-190	WALNUT AVENUE	191+20	LT.										1	1					
84	S-191	WALNUT AVENUE	191+20	LT.	R7-9-12	12" X 18"	12.0				1.5									
84	S-192	WALNUT AVENUE	191+70	RT.	SPECIAL	24" X 30"	13.0				5.0									
84	S-192A	WALNUT AVENUE	191+90	RT.													2			
84	S-193	WALNUT AVENUE	191+90	RT.										2	1					
TOTALS CARRIED TO SUB-SUMMARY							134.9	44.7	12	9	138.8	4	3	16	14	11	3			

CALCULATED JMK
CHECKED WLC

SIGNING ESTIMATED QUANTITIES

WALNUT & CHERRY
COMPLETE STREET
BIKE LANES

R:\Stark\SARTA\Task 3 Canton\STA\91592\traffic\sheets\915921Q007.dgn 6/29/2012 11:58:12 AM jrath

SHEET NO.	REFERENCE NO.	LOCATION	STATION	SIDE	CODE		630 GROUND MOUNTED SUPPORT, NO. 3 POST FT.	630 STREET NAME SIGN SUPPORT, NO. 3 POST FT.	630 SIGN HANGER ASSEMBLY, MAST ARM EACH	630 SIGN SUPPORT ASSEMBLY, POLE MOUNTED EACH	630 SIGN, FLAT SHEET SQ. FT.	630 SIGN, DOUBLE FACED, STREET NAME EACH	630 SIGN, STREET NAME EACH	630 REMOVAL OF GROUND MOUNTED SIGN AND STORAGE, AS PER PLAN EACH	630 REMOVAL OF GROUND MOUNTED POST SUPPORT AND STORAGE, AS PER PLAN EACH	630 REMOVAL OF POLE MOUNTED SIGN AND STORAGE, AS PER PLAN EACH	630 REMOVAL OF POLE MOUNTED SIGN AND REERECTION EACH
85	S-194	WALNUT AVENUE	192+16	RT.										1	1		
84	S-195	WALNUT AVENUE	191+90	RT.	R4-4-36	36" X 30"	13.0				7.5						
85	S-196	WALNUT AVENUE	192+59	LT.										1	1		
85	S-196A	WALNUT AVENUE	192+65	LT.	R7-9-12	12" X 18"	12.0				1.5						
85	S-197	WALNUT AVENUE	193+00 (ON POLE)	RT.	D3-1-24	24" X 6"		17.3		1		1					
					D3-1-18	18" X 6"				1		1					
					R6-2R-24	24" X 30"				1	5.0						
					R3-7R-30	30" X 30"				1	6.3						
					SPECIAL	24" X 18"				1	3.0						
85	S-198	WALNUT AVENUE	192+87	RT.										1	1		
85	S-199	WALNUT AVENUE	192+93 (ON POLE)	LT.												2	
85	S-200	WALNUT AVENUE	193+03	LT.										1	1		
85	S-201	WALNUT AVENUE	193+05 (ON POLE)	LT.	R1-1-30	30" X 30"				1	6.3						
					R6-2L-24	24" X 30"				1	5.0						
					SPECIAL	24" X 18"				1	3.0						
85	S-201A	WALNUT AVENUE	193+42	RT.	R1-1-30	30" X 30"	16.2				6.3						
					R6-2L-24	24" X 30"					5.0						
					SPECIAL	24" X 18"					3.0						
85	S-202	WALNUT AVENUE	(ON MAST ARM FACING EAST)													2	
85	S-203	WALNUT AVENUE	193+48 (ON POLE)	LT.	R6-2R-24	24" X 30"				1	5.0						
					D3-1-18	18" X 6"				1		1					
					D3-1-24	24" X 6"				1		1					
85	S-204	WALNUT AVENUE	193+48	LT.										1	1		
85	S-205	WALNUT AVENUE	193+43	RT.	R6-2L-24	24" X 30"	13.6				5.0						
					SPECIAL	24" X 18"					3.0						
85	S-206	WALNUT AVENUE	(ON MAST ARM FACING NORTH)													2	
85	S-207	WALNUT AVENUE	193+87	RT.										1	1		
85	S-208	WALNUT AVENUE	194+13	LT.	R7-9-12	12" X 18"	12.0				1.5						
85	S-209	WALNUT AVENUE	193+77	LT.										1	1		
85	S-210	WALNUT AVENUE	193+98	RT.										2	1		
85	S-211	WALNUT AVENUE	193+99	LT.										2	1		
85	S-212	WALNUT AVENUE	194+30	RT.										1	1		
85	S-213	WALNUT AVENUE	193+63	LT.	SPECIAL	24" X 30"	13.0				5.0						
85	S-214	WALNUT AVENUE	194+55	RT.	M3-3-24	24" X 12"	15.2				2.0						
					M1-5-24-2	24" X 24"					4.0						
					R2-1-24	24" X 30"					5.0						
85	S-215	WALNUT AVENUE	194+58 (ON POLE)	LT.	R3-17-30	30" X 24"				1	5.0						
85	S-216	WALNUT AVENUE	194+53 (ON POLE)	LT.												1	
85	S-217	WALNUT AVENUE	194+74	RT.	SPECIAL	24" X 30"	13.0				5.0						
85	S-218	WALNUT AVENUE	194+85	LT.										1	1		
85	S-219	WALNUT AVENUE	195+32	RT.	SPECIAL	24" X 30"	13.0				5.0						
85	S-220	WALNUT AVENUE	195+31	LT.										1	1		
85	S-221	WALNUT AVENUE	195+31	LT.	R7-9-12	12" X 18"	12.0				1.5						
85	S-222	WALNUT AVENUE	195+57	RT.	SPECIAL	24" X 30"	13.0				5.0						
85	S-223	WALNUT AVENUE	195+63	LT.										1	1		
85	S-224	WALNUT AVENUE	195+61 (ON POLE)	LT.	R6-2R-24	24" X 30"				1	5.0						
					SPECIAL	24" X 18"				1	3.0						
85	S-225	WALNUT AVENUE	195+61 (ON POLE)	RT.	R6-2L-24	24" X 30"				1	5.0						
85	S-226	WALNUT AVENUE	195+55 (ON POLE)	RT.												1	1
85	S-227	WALNUT AVENUE	(ON MAST ARM FACING WEST)													2	
					R6-2R-24	24" X 30"			1		5.0						
					SPECIAL	24" X 18"			1		3.0						
					R10-11-24	24" X 30"			1		5.0						
					D3-1-60	60" X 14"			2				1				
85	S-228	WALNUT AVENUE	196+06 (ON POLE)	RT.	R6-2R-24	24" X 30"				1	5.0						
					SPECIAL	24" X 18"				1	3.0						
85	S-229	WALNUT AVENUE	196+14 (ON POLE)	LT.	R6-2L-24	24" X 30"				1	5.0						
85	S-230	WALNUT AVENUE	(ON MAST ARM FACING NORTH)													2	
					R6-2L-24	24" X 30"			1		5.0						
					SPECIAL	36" X 30"			1		7.5						
					R10-11-24	24" X 30"			1		5.0						
					D3-1-30	30" X 14"			2				1				
					D3-1-30	30" X 14"			2				1				
85	S-231	WALNUT AVENUE	196+28	RT.	SPECIAL	24" X 30"	13.0				5.0						
85	S-232	WALNUT AVENUE	196+33	LT.	R7-9-12	12" X 18"	12.0				1.5						
85	S-233	WALNUT AVENUE	196+32	LT.										1	1		
TOTALS CARRIED TO SUB-SUMMARY							170.9	17.3	12	18	166.8	4	3	16	14	12	1

CALCULATED JMK
CHECKED WLC

SIGNING ESTIMATED QUANTITIES

WALNUT & CHERRY COMPLETE STREET BIKE LANES

R:\Stark\SARTA\Task 3 Canton\STA\91592\traffic\sheets\91592TQ008.dgn 6/29/2012 11:56:46 AM jrath

SHEET NO.	REFERENCE NO.	LOCATION	STATION	SIDE	CODE	SIZE (INCHES)	630 GROUND MOUNTED SUPPORT, NO. 3 POST FT.	630 STREET NAME SIGN SUPPORT, NO. 3 POST FT.	630 SIGN HANGER ASSEMBLY, MAST ARM EACH	630 SIGN SUPPORT ASSEMBLY, POLE MOUNTED EACH	630 SIGN, FLAT SHEET SQ. FT.	630 SIGN, DOUBLE FACED, STREET NAME EACH	630 REMOVAL OF GROUND MOUNTED SIGN AND STORAGE, AS PER PLAN EACH	630 REMOVAL OF GROUND MOUNTED SIGN AND REERECTION EACH	630 REMOVAL OF GROUND MOUNTED POST SUPPORT AND STORAGE, AS PER PLAN EACH	630 REMOVAL OF POLE MOUNTED SIGN AND STORAGE, AS PER PLAN EACH	630 REMOVAL OF POLE MOUNTED SIGN AND REERECTION EACH	631 INTERNALLY ILLUMINATED FIXED MESSAGE SIGN, AS PER PLAN EACH		
86	S-234	WALNUT AVENUE	197+18 (ON POLE)	RT.	SPECIAL	24" X 30"				1	5.0									
86	S-235	WALNUT AVENUE	197+23	RT.	R4-4-36	36" X 30"	13.0				7.5									
86	S-236	WALNUT AVENUE	197+84	LT.									1		1					
86	S-237	WALNUT AVENUE	197+84	LT.	R7-9-12	12" X 18"	12.0				1.5									
86	S-238	WALNUT AVENUE	198+07	RT.										1						
					D3-1-24	24" X 6"		17.8				1								
					D3-1-18	18" X 6"						1								
					R6-2R-24	24" X 30"					5.0									
					R3-7R-30	30" X 30"					6.3									
86	S-239	WALNUT AVENUE	198+18 (ON POLE)	LT.													2			
86	S-240	WALNUT AVENUE	198+26	LT.									1		1					
86	S-241	WALNUT AVENUE	198+32	LT.	R1-1-30	30" X 30"	16.2				6.3									
					R6-2L-24	24" X 30"					5.0									
					SPECIAL	24" X 18"					3.0									
86	S-241A	WALNUT AVENUE	198+61	LT.	R1-1-30	30" X 30"	16.2				6.3									
					R6-2L-24	24" X 30"					5.0									
					SPECIAL	24" X 18"					3.0									
86	S-242	WALNUT AVENUE	(ON MAST ARM FACING EAST)													2				
86	S-243	WALNUT AVENUE	198+61	RT.	R6-2L-24	24" X 30"	13.6				5.0									
					SPECIAL	24" X 18"					3.0									
86	S-244	WALNUT AVENUE	198+76 (ON POLE)	LT.	D3-1-24	24" X 6"				1		1								
					D3-1-18	18" X 6"				1		1								
					R6-2R-24	24" X 30"				1	5.0									
86	S-245	WALNUT AVENUE	199+02	RT.	SPECIAL	24" X 30"	13.0				5.0									
86	S-246	WALNUT AVENUE	(ON MAST ARM FACING NORTH)													2				
86	S-247	WALNUT AVENUE	198+92	RT.									1		1					
86	S-248	WALNUT AVENUE	198+76	LT.	SPECIAL	24" X 30"	13.0				5.0									
86	S-249	WALNUT AVENUE	199+54	LT.									1		1					
86	S-250	WALNUT AVENUE	199+85 (ON POLE)	LT.	R7-9-12	12" X 18"				1	1.5									
					R3-17-30	30" X 24"				1	5.0									
86	S-251	WALNUT AVENUE	200+41	RT.	SPECIAL	24" X 30"	13.0				5.0									
86	S-252	WALNUT AVENUE	200+47	RT.									1		1					
86	S-253	WALNUT AVENUE	200+89 (ON POLE)	LT.	R6-2L-24	24" X 30"				1	5.0									
					R6-2R-24	24" X 30"				1	5.0									
					SPECIAL	24" X 18"				1	3.0									
					SPECIAL	24" X 18"				1	3.0									
86	S-254	WALNUT AVENUE	(ON MAST ARM FACING EAST)		D3-1-60	60" X 14"												1		
					R6-2L-24	24" X 30"												1		
					SPECIAL	24" X 18"			1		3.0									
86	S-255	WALNUT AVENUE	(ON MAST ARM FACING WEST)		R3-5L-30	30" x 36"												1		
					R6-2R-24	24" X 30"												1		
					D3-1-60	60" X 14"												1		
					SPECIAL	24" X 18"			1		3.0									
86	S-256	WALNUT AVENUE	(ON MAST ARM FACING NORTH)		D3-1-78	78" X 14"												1		
					D3-1-78	78" X 14"												1		
86	S-257	WALNUT AVENUE	201+51 (ON POLE)	RT.	R10-11-24	24" X 30"				1	5.0									
					R6-2L-24	24" X 30"				1	5.0									
					R6-2R-24	24" X 30"				1	5.0									
					SPECIAL	24" X 18"				1	3.0									
					SPECIAL	24" X 18"				1	3.0									
TOTALS CARRIED TO SUB-SUMMARY							109.9	17.8	2	15	131.3	4	5	1	5	4	2	7		

CALCULATED JMK
CHECKED WLC

SIGNING ESTIMATED QUANTITIES

WALNUT & CHERRY
COMPLETE STREET
BIKE LANES

R:\Stork\SARTA\Task 3 Canton\STA\91592\traffic\sheets\91592TQ009.dgn 6/28/2012 9:10:38 AM jroth

SHEET NO.	REFERENCE NO.	LOCATION	STATION	SIDE	CODE	SIZE (INCHES)	630 GROUND MOUNTED SUPPORT, NO. 3 POST FT.	630 STREET NAME SIGN SUPPORT, NO. 3 POST FT.	630 SIGN HANGER ASSEMBLY, MAST ARM EACH	630 SIGN SUPPORT ASSEMBLY, POLE MOUNTED EACH	630 SIGN, FLAT SHEET SQ. FT.	630 SIGN, PERMANENT OVERLAY, AS PER PLAN SQ. FT.	630 SIGN, DOUBLE FACED, STREET NAME EACH	630 REMOVAL OF GROUND MOUNTED SIGN AND STORAGE, AS PER PLAN EACH	630 REMOVAL OF GROUND MOUNTED POST SUPPORT AND STORAGE, AS PER PLAN EACH	630 REMOVAL OF POLE MOUNTED SIGN AND STORAGE, AS PER PLAN EACH
87	S-258	WALNUT AVENUE	203+23 (ON POLE)	RT.	SPECIAL	24" X 30"				1	5.0					
87	S-258A	WALNUT AVENUE	203+60	RT.	D3-1-24	24" X 6"		31.5					1			
					D3-1-18	18" X 6"							1			
					R6-2R-24	24" X 30"					5.0					
					SPECIAL	42" X 30"					8.8					
87	S-259	WALNUT AVENUE	203+56	LT.										1	1	
87	S-260	WALNUT AVENUE	203+73	LT.	R1-1-30	30" X 30"	16.2				6.3					
					R6-2L-24	24" X 30"					5.0					
					SPECIAL	24" X 18"					3.0					
87	S-260A	WALNUT AVENUE	204+02	LT.	R1-1-30	30" X 30"	16.2				6.3					
					R6-2L-24	24" X 30"					5.0					
					SPECIAL	24" X 18"					3.0					
87	S-261	WALNUT AVENUE	(ON MAST ARM FACING EAST)													2
87	S-262	WALNUT AVENUE	204+02	RT.	R6-2L-24	24" X 30"	13.6				5.0					
					SPECIAL	24" X 18"					3.0					
87	S-263	WALNUT AVENUE	(ON MAST ARM FACING NORTH)													2
87	S-263A	WALNUT AVENUE	204+18	LT.	D3-1-24	24" X 6"		13.2					1			
					D3-1-18	18" X 6"							1			
					R6-2R-24	24" X 30"					5.0					
87	S-264	WALNUT AVENUE	204+28 (ON POLE)	LT.	SPECIAL	24" X 30"				1	5.0					
87	S-265	WALNUT AVENUE	204+89 (ON POLE)	RT.	M4-5-24	24" X 12"				1	2.0					
					M4-5-24	24" X 12"				1	2.0					
					M3-3-24	24" X 12"				1	2.0					
					M1-1-24-2	24" X 24"				1	4.0					
					M1-4-24-2	24" X 24"				1	4.0					
					M1-5-24-2	24" X 24"				1	4.0					
					M6-2L-21	21" x 15"				1	2.2					
					SPECIAL	36" X 30"				1	7.5					
					R7-9-12	12" X 18"				1	1.5					
87	S-266	WALNUT AVENUE	204+89 (ON POLE)	RT.												9
87	S-267	WALNUT AVENUE	205+61	LT.								8.5				
87	S-268	NOT USED														
87	S-269	WALNUT AVENUE	205+37 (ON POLE)	LT.												1
87	S-270	WALNUT AVENUE	205+37 (ON POLE)	LT.	SPECIAL	36" X 30"				1	7.5					1
87	2-271	WALNUT AVENUE	205+25 (ON POLE)	RT.	R3-17-30	30" X 24"				1	5.0					
					R3-17B-30	30" X 12"				1	2.5					
87	S-272	WALNUT AVENUE	(ON MAST ARM FACING NORTH)	LT.	R10-11-24	24" X 30"			1		5.0					
87	2-273	WALNUT AVENUE	205+95 (ON POLE)	LT.	R3-17-30	30" X 24"				1	5.0					
					R3-17A-30	30" X 12"				1	2.5					
87	S-274	WALNUT AVENUE	206+15 (ON POLE)	RT.	R6-2L-24	24" X 30"				1	5.0					
87	S-275	WALNUT AVENUE	206+15 (ON POLE)	RT.												1
87	S-276	WALNUT AVENUE	206+25	RT.										1	1	
87	S-277	WALNUT AVENUE	206+15 (ON POLE)	LT.												1
87	S-278	WALNUT AVENUE	206+22	LT.	R6-2R-24	24" X 30"	13.6				5.0					
					SPECIAL	24" X 18"					3.0					
87	S-279	WALNUT AVENUE	206+25	RT.	R5-1-30	30" X 30"	13.0				6.3					
87	S-280	WALNUT AVENUE	(ON MAST ARM FACING WEST)													2
					R6-2R-24	24" X 30"			1		5.0					
					SPECIAL	24" X 18"			1		3.0					
					R10-11-24	24" X 30"			1		5.0					
87	S-281	WALNUT AVENUE	206+74	RT.	R3-17-30	30" X 24"	13.9				5.0					
					R3-17A-30	30" X 12"					2.5					
					M5-1L-21	21" X 15"					2.2					
87	S-282	WALNUT AVENUE	206+74	RT.	R6-2R-24	24" X 30"	13.6				5.0					
					SPECIAL	24" X 18"					3.0					
87	S-283	WALNUT AVENUE	NOT USED													
87	S-284	WALNUT AVENUE	(ON MAST ARM FACING NORTH)													1
					R6-2L-24	24" X 30"			1		5.0					
TOTALS CARRIED TO SUB-SUMMARY							100.0	44.7	5	17	176.9	8.5	4	2	2	20

CALCULATED JMK
CHECKED WLC

SIGNING ESTIMATED QUANTITIES

WALNUT & CHERRY
COMPLETE STREET
BIKE LANES

R:\Stark\SARTA\Task 3 Canton\STA\91592\traffic\sheets\91592TQ010.dgn 6/28/2012 9:10:59 AM jroth

SHEET NO.	REFERENCE NO.	LOCATION	STATION	SIDE	CODE	SIZE (INCHES)	630 GROUND MOUNTED SUPPORT, NO. 3 POST	630 SIGN SUPPORT ASSEMBLY, POLE MOUNTED	630 SIGN, FLAT SHEET	630 REMOVAL OF GROUND MOUNTED SIGN AND STORAGE, AS PER PLAN	630 REMOVAL OF GROUND MOUNTED POST SUPPORT AND STORAGE, AS PER PLAN	630 REMOVAL OF POLE MOUNTED SIGN AND STORAGE, AS PER PLAN
							FT.	EACH	SQ. FT.	EACH	EACH	EACH
88	S-285	WALNUT AVENUE	207+00	LT.	R6-6-24	24" X 30"	13.0		5.0			
88	S-286	WALNUT AVENUE	207+00	RT.	R6-6-24	24" X 30"	13.0		5.0			
88	S-287	WALNUT AVENUE	207+11	LT.						1	1	
88	S-288	WALNUT AVENUE	NOT USED									
88	S-289	WALNUT AVENUE	207+23 (ON POLE)	LT.	M4-5-24	24" X 12"		1	2.0			
					M1-1-24-2	24" X 24"		1	4.0			
					M1-4-24	24" X 24"		1	4.0			
					M3-3-24	24" X 12"		1	2.0			
					M1-5-24-2	24" X 24"		1	4.0			
					M6-2L-21	21" X 15"		1	2.2			
88	S-290	WALNUT AVENUE	207+23 (ON POLE)	LT.								6
88	S-291	WALNUT AVENUE	207+20	LT.	R6-2R-24	24" X 30"	14.6		5.0			
					SPECIAL	24" X 30"			5.0			
88	S-292	WALNUT AVENUE	207+20	LT.						1	1	
88	S-293	WALNUT AVENUE	NOT USED									
88	S-294	WALNUT AVENUE	207+94 (ON POLE)	RT.	W6-3-36	36" X 36"		1	9.0			
					W16-9P-24	24" X 12"		1	2.0			
88	S-295	WALNUT AVENUE	207+80	LT.						1	1	
88	S-296	WALNUT AVENUE	207+81	LT.	R6-2R-24	24" X 30"	13.0		5.0			
88	S-297	WALNUT AVENUE	208+48	LT.	R6-2R-24	24" X 30"	13.0		5.0			
88	S-298	WALNUT AVENUE	208+45	LT.						1	1	
88	S-299	WALNUT AVENUE	NOT USED									
88	S-300	WALNUT AVENUE	NOT USED									
					R6-7-24	24" X 30"			5.0			
88	S-301	WALNUT AVENUE	208+61	LT.						1	1	
88	S-302	WALNUT AVENUE	208+69 (ON POLE)	LT.	SPECIAL	24" X 30"		1	5.0			
88	S-303	WALNUT AVENUE	208+79	LT.						2	1	
88	S-304	WALNUT AVENUE	208+85	LT.	R5-1-30	30" X 30"	14.6		6.3			
					R6-7-24	24" X 30"			5.0			
TOTALS CARRIED TO SUB-SUMMARY							81.2	9	80.4	7	6	6

CALCULATED JMK
CHECKED WLC

SIGNING ESTIMATED QUANTITIES

WALNUT & CHERRY COMPLETE STREET BIKE LANES

R:\Stark\SARTA\Task 3 Canton\STA\91592\traffic\sheets\91592TQ011.dgn 6/28/2012 9:11:54 AM jroth

SHEET NO.	REFERENCE NO.	LOCATION	STATION FROM	STATION TO	SIDE	644 LANE LINE MILE	644 CENTER LINE MILE	644 CHANNELIZING LINE FT	644 STOP LINE FT	644 LANE ARROW EACH	644 BIKE LANE SYMBOL MARKING EACH	644 PAVEMENT MARKING, MISC.: WORD ON PAVEMENT, 36" EACH
89	LL-1	WALNUT AVENUE	160+29	162+00	RT.	171						
89	CL-1	WALNUT AVENUE	160+27	162+00	LT.		173					
89	CH-1	WALNUT AVENUE	160+31	161+89	RT.			158				
89	SL-1	WALNUT AVENUE	160+32	160+32	LT.				5			
89	LA-1	WALNUT AVENUE	160+50		LT.					1		
89	LA-1A	WALNUT AVENUE	159+53		LT.					1		
89	LA-1B	WALNUT AVENUE	159+53		LT.					1		
89	LA-1C	WALNUT AVENUE	159+53		RT.					1		
89	LA-2	WALNUT AVENUE	160+68		RT.					1		
89	BS-1	WALNUT AVENUE	160+62		LT.						1	
89	BS-2	WALNUT AVENUE	160+56		RT.						1	
89	W-1	WALNUT AVENUE	160+34		LT.							1
						SUBTOTAL 171 OR	SUBTOTAL 173 OR					
TOTALS CARRIED TO SUB-SUMMARY						0.03	0.03	158	5	5	2	1

CALCULATED JMK
CHECKED WLC

PAVEMENT MARKING SUBSUMMARY

WALNUT & CHERRY
COMPLETE STREET
BIKE LANES

R:\Stark\SARTA\Task 3 Canton\STA\91592\traffic\sheets\91592TQ012.dgn 6/28/2012 9:12:18 AM jroth

SHEET NO.	REFERENCE NO.	LOCATION	STATION FROM	STATION TO	SIDE	644 LANE LINE MILE	644 CENTER LINE MILE	644 CHANNELIZING LINE FT	644 STOP LINE FT	644 CROSSWALK LINE FT	644 LANE ARROW EACH	644 DOTTED LINE, 4" (WHITE) FT	644 DOTTED LINE, 4" (YELLOW) FT	644 BIKE LANE SYMBOL MARKING EACH	644 PAVEMENT MARKING, MISC.: GREEN PAINTED LANE SQ FT
90	LL-2	WALNUT AVENUE	162+00	167+00	℄	500									
90	CL-3	WALNUT AVENUE	162+00	166+01	LT.		401								
90	CL-4	WALNUT AVENUE	166+35	167+00	LT.		65								
90	CH-2	WALNUT AVENUE	161+99	165+96	RT.			397							
90	CH-3	WALNUT AVENUE	166+33	167+00	RT.			67							
90	SL-2	11TH STREET NE	100+30	100+32	LT.				15						
90	SL-3	11TH STREET NE	99+67	99+68	RT.				13						
90	CW-1	11TH STREET NE	100+26	100+29	LT./RT.					28					
90	CW-2	11TH STREET NE	100+20	100+23	LT./RT.					28					
90	CW-3	11TH STREET NE	99+75	99+78	LT./RT.					27					
90	CW-4	11TH STREET NE	99+69	99+72	LT./RT.					27					
90	LA-3	WALNUT AVENUE	162+25		RT.						1				
90	LA-4	WALNUT AVENUE	163+91		LT.						1				
90	LA-5	WALNUT AVENUE	164+09		RT.						1				
90	LA-6	WALNUT AVENUE	165+50		RT.						1				
90	LA-7	WALNUT AVENUE	165+93		RT.						1				
90	LA-8	WALNUT AVENUE	165+80		LT.						1				
90	LA-9	WALNUT AVENUE	166+40		LT.						1				
90	LA-10	WALNUT AVENUE	166+53		RT.						1				
90	DL-1	WALNUT AVENUE	161+80	162+80	RT.							100			
90	DL-2	WALNUT AVENUE	166+01	166+35	LT.							34			
90	DL-3	WALNUT AVENUE	166+01	166+35	LT.								34		
90	DL-4	WALNUT AVENUE	165+96	166+33	RT.							37			
90	DL-5	WALNUT AVENUE	165+96	166+33	RT.							37			
90	BS-3	WALNUT AVENUE	162+13		RT.									1	
90	BS-4	WALNUT AVENUE	164+03		LT.									1	
90	BS-5	WALNUT AVENUE	163+97		RT.									1	
90	BS-6	WALNUT AVENUE	165+38		RT.									1	
90	BS-7	WALNUT AVENUE	165+81		RT.									1	
90	BS-8	WALNUT AVENUE	165+92		LT.									1	
90	BS-9	WALNUT AVENUE	166+52		LT.									1	
90	BS-10	WALNUT AVENUE	166+41		RT.									1	
90	PL-1	WALNUT AVENUE	166+01	166+35	LT.										168
90	PL-2	WALNUT AVENUE	165+96	166+33	RT.										223
						SUBTOTAL 500 OR	SUBTOTAL 466 OR								
TOTALS CARRIED TO GENERAL SUMMARY						0.09	0.09	464	28	110	8	208	34	8	391

CALCULATED JMK
CHECKED WLC

PAVEMENT MARKING SUBSUMMARY

WALNUT & CHERRY
COMPLETE STREET
BIKE LANES

R:\Stark\SARTA\Task 3 Canton\STA\91592\traffic\sheets\91592TQ013.dgn 6/28/2012 9:13:24 AM jroth

SHEET NO.	REFERENCE NO.	LOCATION	STATION FROM	STATION TO	SIDE	644 LANE LINE MILE	644 CENTER LINE MILE	644 CHANNELIZING LINE FT	644 LANE ARROW EACH	644 BIKE LANE SYMBOL MARKING EACH
91	LL-3	WALNUT AVENUE	167+00	172+00	℄	500				
91	CL-5	WALNUT AVENUE	167+00	172+00	LT.		500			
91	CH-4	WALNUT AVENUE	167+00	172+00	RT.			500		
91	LA-11	WALNUT AVENUE	167+27		LT.				1	
91	LA-12	WALNUT AVENUE	168+47		LT.				1	
91	LA-13	WALNUT AVENUE	169+00		RT.				1	
91	LA-14	WALNUT AVENUE	169+67		LT.				1	
91	LA-15	WALNUT AVENUE	171+92		LT.				1	
91	BS-11	WALNUT AVENUE	167+39		LT.					1
91	BS-12	WALNUT AVENUE	168+59		LT.					1
91	BS-13	WALNUT AVENUE	168+88		RT.					1
91	BS-14	WALNUT AVENUE	169+79		LT.					1
91	BS-16	WALNUT AVENUE	171+98		RT.					1
						SUBTOTAL 500 OR	SUBTOTAL 500 OR			
TOTALS CARRIED TO SUB-SUMMARY						0.09	0.09	500	5	5

CALCULATED JMK
CHECKED WLC

PAVEMENT MARKING SUBSUMMARY

WALNUT & CHERRY
COMPLETE STREET
BIKE LANES

R:\Stark\SARTA\Task 3 Canton\STA\91592\traffic\sheets\91592TQ014.dgn 6/28/2012 9:13:42 AM jroth

SHEET NO.	REFERENCE NO.	LOCATION	STATION FROM	STATION TO	SIDE	644 LANE LINE MILE	644 CENTER LINE MILE	644 CHANNELIZING LINE FT	644 STOP LINE FT	644 CROSSWALK LINE FT	644 LANE ARROW EACH	644 DOTTED LINE, 4" (WHITE) FT	644 DOTTED LINE, 4" (YELLOW) FT	644 BIKE LANE SYMBOL MARKING EACH	644 PAVEMENT MARKING, MISC.: GREEN PAINTED LANE SQ FT	644 PAVEMENT MARKING, MISC.: GREEN BIKE BOX SQ FT
92	LL-4	WALNUT AVENUE	172+00	175+36	℄	336										
92	LL-5	9TH STREET NE	9+60	9+69	LT.	9										
92	LL-6	WALNUT AVENUE	176+04	177+00	℄	96										
92	CL-6	WALNUT AVENUE	172+00	175+41	LT.		341									
92	CL-7	9TH STREET NE	10+30	10+35	LT.		5									
92	CL-8	9TH STREET NE	9+60	9+68	℄		8									
92	CL-9	WALNUT AVENUE	176+04	177+00	LT.		96									
92	CH-5	WALNUT AVENUE	172+00	174+85	RT.			285								
92	CH-6	WALNUT AVENUE	176+05	177+00	RT.			95								
92	SL-4	WALNUT AVENUE	175+33	175+37	LT./RT.				29							
92	SL-5	9TH STREET NE	10+34	10+34	LT.				24							
92	SL-6	9TH STREET NE	9+63	9+64	RT.				26							
92	SL-7	WALNUT AVENUE	176+08	176+08	LT.				6							
92	CW-5	WALNUT AVENUE	175+37	175+42	LT./RT.					39						
92	CW-6	WALNUT AVENUE	175+43	175+50	LT./RT.					47						
92	CW-7	9TH STREET NE	10+30	10+31	LT./RT.					49						
92	CW-8	9TH STREET NE	10+24	10+25	LT./RT.					51						
92	CW-9	WALNUT AVENUE	175+98	175+99	LT./RT.					51						
92	CW-10	WALNUT AVENUE	176+04	176+05	LT./RT.					44						
92	CW-11	9TH STREET NE	9+73	9+76	LT./RT.					54						
92	CW-12	9TH STREET NE	9+67	9+70	LT./RT.					54						
92	LA-16	WALNUT AVENUE	172+10		RT.						1					
92	LA-17	WALNUT AVENUE	173+00		LT.						1					
92	LA-18	WALNUT AVENUE	174+10		LT.						1					
92	LA-19	WALNUT AVENUE	175+15		LT.						1					
92	LA-20	WALNUT AVENUE	175+50		LT.						1					
92	LA-21	WALNUT AVENUE	175+28		RT.						1					
92	LA-22	WALNUT AVENUE	175+97		RT.						1					
92	LA-23	WALNUT AVENUE	176+25		RT.						1					
92	LA-24	WALNUT AVENUE	176+13		LT.						1					
92	DL-6	WALNUT AVENUE	174+85	175+34	RT.							49				
92	DL-7	WALNUT AVENUE	175+48	175+98	LT.							50				
92	DL-8	WALNUT AVENUE	175+47	175+98	LT.								51			
92	DL-9	WALNUT AVENUE	175+46	175+98	RT.							52				
92	DL-10	WALNUT AVENUE	175+44	175+99	RT.							55				
92	DL-11	WALNUT AVENUE	175+44	175+99	RT.							55				
92	DL-12	WALNUT AVENUE	176+05	177+30	RT.							125				
92	BS-15	WALNUT AVENUE	172+04		LT.									1		
92	BS-17	WALNUT AVENUE	173+12		LT.									1		
92	BS-18	WALNUT AVENUE	174+22		LT.									1		
92	BS-19	WALNUT AVENUE	175+27		LT.									1		
92	BS-20	WALNUT AVENUE	175+51		LT.									1		
92	BS-21	WALNUT AVENUE	175+16		RT.									1		
92	BS-22	WALNUT AVENUE	175+97		RT.									1		
92	BS-23	WALNUT AVENUE	176+13		RT.									1		
92	BS-24	WALNUT AVENUE	176+25		LT.									1		
92	PL-3	WALNUT AVENUE	175+47	175+98	LT.										261	
92	PL-4	WALNUT AVENUE	175+44	175+99	RT.										213	
92	BB-1	WALNUT AVENUE	175+48	175+58	LT.											100
92	BB-2	WALNUT AVENUE	175+89	175+99	RT.											126
						SUBTOTAL 441 OR	SUBTOTAL 450 OR									
TOTALS CARRIED TO SUB-SUMMARY						0.08	0.09	380	85	389	9	386	51	9	474	226

CALCULATED JMK
CHECKED WLC

PAVEMENT MARKING SUBSUMMARY

WALNUT & CHERRY
COMPLETE STREET
BIKE LANES

R:\Stark\SARTA\Task 3 Canton\STA\91592\traffic\sheets\91592TQ015.dgn 6/28/2012 9:14:44 AM jroth

SHEET NO.	REFERENCE NO.	LOCATION	STATION FROM	STATION TO	SIDE	644 LANE LINE MILE	644 CENTER LINE MILE	644 CHANNELIZING LINE FT	644 LANE ARROW EACH	644 BIKE LANE SYMBOL MARKING EACH
93	LL-7	WALNUT AVENUE	177+00	182+00	℄	500				
93	CL-10	WALNUT AVENUE	177+00	182+00	LT.		500			
93	CH-7	WALNUT AVENUE	177+00	182+00	RT.			500		
93	LA-25	WALNUT AVENUE	177+91		LT.				1	
93	LA-26	WALNUT AVENUE	178+09		RT.				1	
93	LA-27	WALNUT AVENUE	179+91		LT.				1	
93	LA-28	WALNUT AVENUE	180+09		RT.				1	
93	LA-29	WALNUT AVENUE	181+81		LT.				1	
93	BS-25	WALNUT AVENUE	178+03		LT.					1
93	BS-26	WALNUT AVENUE	177+97		RT.					1
93	BS-27	WALNUT AVENUE	180+03		LT.					1
93	BS-28	WALNUT AVENUE	179+97		RT.					1
93	BS-29	WALNUT AVENUE	181+93		LT.					1
						SUBTOTAL 500 OR	SUBTOTAL 500 OR			
TOTALS CARRIED TO SUB-SUMMARY						0.09	0.09	500	5	5

CALCULATED JMK
CHECKED WLC

PAVEMENT MARKING SUBSUMMARY

WALNUT & CHERRY
COMPLETE STREET
BIKE LANES

R:\Stork\SARTA\Task 3 Canton\STA\91592\traffic\sheets\91592TQ016.dgn 6/28/2012 9:15:09 AM jroth

SHEET NO.	REFERENCE NO.	LOCATION	STATION FROM	STATION TO	SIDE	644 LANE LINE MILE	644 CENTER LINE MILE	644 CHANNELIZING LINE FT	644 LANE ARROW EACH	644 DOTTED LINE, 4" (WHITE) EACH	644 BIKE LANE SYMBOL MARKING EACH
94	LL-8	WALNUT AVENUE	182+00	187+00	℄	500					
94	CL-11	WALNUT AVENUE	182+00	187+00	LT.		500				
94	CH-8	WALNUT AVENUE	182+00	187+25	RT.			525			
94	LA-30	WALNUT AVENUE	182+59		RT.				1		
94	LA-31	WALNUT AVENUE	182+96		LT.				1		
94	LA-32	WALNUT AVENUE	185+59		RT.				1		
94	LA-33	WALNUT AVENUE	185+41		LT.				1		
94	DL-13	WALNUT AVENUE	183+15	184+65	RT.					150	
94	DL-14	WALNUT AVENUE	186+16	187+66	RT.					150	
94	BS-30	WALNUT AVENUE	182+47		RT.						1
94	BS-31	WALNUT AVENUE	183+08		LT.						1
94	BS-32	WALNUT AVENUE	185+47		RT.						1
94	BS-33	WALNUT AVENUE	185+53		LT.						1
						SUBTOTAL 500 OR	SUBTOTAL 500 OR				
TOTALS CARRIED TO SUB-SUMMARY						0.09	0.09	525	4	300	4

CALCULATED JMK
CHECKED WLC

PAVEMENT MARKING SUBSUMMARY

WALNUT & CHERRY
COMPLETE STREET
BIKE LANES

R:\Stork\SARTA\Task 3 Canton\STA\91592\traffic\sheets\91592TQ017.dgn 6/28/2012 9:15:54 AM jroth

SHEET NO.	REFERENCE NO.	LOCATION	STATION FROM	STATION TO	SIDE	644 LANE LINE MILE	644 CENTER LINE MILE	644 CHANNELIZING LINE FT	644 STOP LINE FT	644 CROSSWALK LINE FT	644 TRANSVERSE/DIAGONAL LINE FT	644 PARKING LOT STALL MARKING FT
TP7A	LL-9	WALNUT AVENUE	187+00	187+78	℄	78						
TP7A	LL-10	WALNUT AVENUE	188+34	190+33	LT.	199						
TP7A	LL-11	WALNUT AVENUE	190+90	192+00	LT.	110						
TP7A	CL-12	WALNUT AVENUE	187+00	187+77	LT.		77					
TP7A	CL-13	WALNUT AVENUE	188+32	190+37	LT.		205					
TP7A	CL-14	WALNUT AVENUE	190+90	192+00	LT.		110					
TP7A	CH-9	WALNUT AVENUE	188+34	190+33	RT.			199				
TP7A	CH-10	WALNUT AVENUE	188+45	189+23	RT.			78				
TP7A	CH-11	WALNUT AVENUE	189+72	190+31	RT.			59				
TP7A	CH-12	WALNUT AVENUE	190+90	192+00	RT.			110				
TP7A	CH-13	WALNUT AVENUE	191+01	191+95	RT.			94				
TP7A	SL-8	6TH STREET NE	20+37	20+37	LT./RT.				29			
TP7A	SL-9	WALNUT AVENUE	190+33	190+33	LT./RT.				29			
TP7A	SL-10	5TH STREET NE	29+66	29+66	LT./RT.				27			
TP7A	SL-11	WALNUT AVENUE	190+94	190+94	LT.				5			
TP7A	CW-13	6TH STREET NE	20+33	20+33	LT./RT.					31		
TP7A	CW-14	6TH STREET NE	20+27	20+27	LT./RT.					36		
TP7A	CW-15	6TH STREET NE	19+75	19+68	LT./RT.					33		
TP7A	CW-16	6TH STREET NE	19+68	19+62	LT./RT.					29		
TP7A	CW-17	WALNUT AVENUE	190+37	190+37	LT./RT.					34		
TP7A	CW-18	WALNUT AVENUE	190+43	190+43	LT./RT.					35		
TP7A	CW-19	5TH STREET NE	30+36	30+36	LT./RT.					22		
TP7A	CW-20	5TH STREET NE	30+30	30+30	LT./RT.					30		
TP7A	CW-21	WALNUT AVENUE	190+84	190+84	LT./RT.					35		
TP7A	CW-22	WALNUT AVENUE	190+90	190+90	LT./RT.					34		
TP7A	CW-23	5TH STREET NE	29+76	29+76	LT./RT.					22		
TP7A	CW-24	5TH STREET NE	29+70	29+70	LT./RT.					23		
TP7A	TL-2	WALNUT AVENUE	188+45	188+80	RT.						114	
TP7A	TL-3	WALNUT AVENUE	191+01	191+36	RT.						115	
TP7A	PS-1	NOT USED										
TP7A	PS-2	WALNUT AVENUE	188+58	188+80	RT.							31
TP7A	PS-3	WALNUT AVENUE	188+72	188+92	RT.							28
TP7A	PS-4	WALNUT AVENUE	188+86	189+06	RT.							28
TP7A	PS-5	WALNUT AVENUE	189+01	189+23	RT.							31
TP7A	PS-6	WALNUT AVENUE	189+23	189+23	RT.							22
TP7A	PS-7	WALNUT AVENUE	189+50	189+72	RT.							31
TP7A	PS-8	WALNUT AVENUE	189+64	189+84	RT.							28
TP7A	PS-9	WALNUT AVENUE	189+78	189+98	RT.							28
TP7A	PS-10	WALNUT AVENUE	189+92	190+12	RT.							28
TP7A	PS-11	NOT USED										
TP7A	PS-12	WALNUT AVENUE	191+14	191+36	RT.							31
TP7A	PS-13	WALNUT AVENUE	191+28	191+48	RT.							28
TP7A	PS-14	WALNUT AVENUE	191+42	191+62	RT.							28
TP7A	PS-15	WALNUT AVENUE	191+56	191+76	RT.							28
						SUBTOTAL 387 OR	SUBTOTAL 392 OR					
TOTALS CARRIED TO SUB-SUMMARY						0.07	0.07	540	90	364	229	370

CALCULATED JMK
CHECKED WLC

PAVEMENT MARKING SUBSUMMARY

WALNUT & CHERRY
COMPLETE STREET
BIKE LANES

R:\Stark\SARTA\Task 3 Canton\STA\91592\traffic\sheets\91592TQ018.dgn 6/28/2012 9:16:20 AM jroth

SHEET NO.	REFERENCE NO.	LOCATION	STATION FROM	STATION TO	SIDE	644 LANE ARROW EACH	644 DOTTED LINE, 4" (WHITE) FT	644 DOTTED LINE, 4" (YELLOW) FT	644 BIKE LANE SYMBOL MARKING EACH	644 PAVEMENT MARKING, MISC.: GREEN PAINTED LANE SQ FT	644 PAVEMENT MARKING, MISC.: GREEN BIKE BOX SQ FT
95	LA-34	WALNUT AVENUE	187+51		LT.	1					
95	LA-35	WALNUT AVENUE	187+69		RT.	1					
95	LA-36	6TH STREET NE	20+42		LT.	1					
95	LA-36A	6TH STREET NE	20+42		RT.	1					
95	LA-37	WALNUT AVENUE	188+41		LT.	1					
95	LA-38	WALNUT AVENUE	188+59		RT.	1					
95	LA-39	WALNUT AVENUE	190+11		LT.	1					
95	LA-40	WALNUT AVENUE	190+29		RT.	1					
95	LA-41	WALNUT AVENUE	190+70		RT.	1					
95	LA-42	WALNUT AVENUE	190+96		LT.	1					
95	LA-43	WALNUT AVENUE	191+14		RT.	1					
95	DL-15	WALNUT AVENUE	187+25	187+79	RT.		54				
95	DL-16	WALNUT AVENUE	187+88	188+32	LT.		45				
95	DL-17	WALNUT AVENUE	187+77	188+32	LT.			57			
95	DL-18	WALNUT AVENUE	187+78	188+34	LT.		57				
95	DL-19	WALNUT AVENUE	187+79	188+34	RT.		57				
95	DL-20	WALNUT AVENUE	187+66	188+24	RT.		57				
95	DL-21	WALNUT AVENUE	189+23	189+72	RT.		49				
95	DL-22	WALNUT AVENUE	190+43	190+84	LT.		41				
95	DL-23	WALNUT AVENUE	190+43	190+84	LT.			41			
95	DL-24	WALNUT AVENUE	190+43	190+84	LT.		41				
95	DL-25	WALNUT AVENUE	190+43	190+84	RT.		41				
95	DL-26	WALNUT AVENUE	190+43	190+84	RT.		41				
95	BS-34	WALNUT AVENUE	187+63		LT.				1		
95	BS-35	WALNUT AVENUE	187+57		RT.				1		
95	BS-36	NOT USED									
95	BS-37	WALNUT AVENUE	188+53		LT.				1		
95	BS-38	WALNUT AVENUE	188+47		RT.				1		
95	BS-39	WALNUT AVENUE	190+23		LT.				1		
95	BS-40	WALNUT AVENUE	190+17		RT.				1		
95	BS-41	WALNUT AVENUE	190+70		RT.				1		
95	BS-42	WALNUT AVENUE	191+08		LT.				1		
95	BS-43	WALNUT AVENUE	191+02		RT.				1		
95	PL-5	WALNUT AVENUE	187+77	188+32	LT.					277	
95	PL-6	WALNUT AVENUE	187+79	188+34	RT.					281	
95	PL-7	WALNUT AVENUE	190+43	190+84	LT.					205	
95	PL-8	WALNUT AVENUE	190+43	190+84	RT.					205	
95	BB-3	WALNUT AVENUE	190+61	190+71	RT.						100
TOTALS CARRIED TO SUB-SUMMARY						11	483	98	9	968	100

CALCULATED JMK
CHECKED WLC

PAVEMENT MARKING SUBSUMMARY

WALNUT & CHERRY
COMPLETE STREET
BIKE LANES

R:\Stark\SARTA\Task 3 Canton\STA\91592\traffic\sheets\91592TQ019.dgn 6/28/2012 9:17:07 AM jroth

SHEET NO.	REFERENCE NO.	LOCATION	STATION FROM	STATION TO	SIDE	644 LANE LINE MILE	644 CENTER LINE MILE	644 CHANNELIZING LINE FT	644 STOP LINE FT	644 CROSSWALK LINE FT	644 TRANSVERSE/DIAGONAL LINE FT	644 PARKING LOT STALL MARKING FT
TP8A	LL-12	WALNUT AVENUE	192+00	195+61	LT.	361						
TP8A	LL-13	NOT USED										
TP8A	LL-14	WALNUT AVENUE	196+10	197+00	LT.	90						
TP8A	CL-15	WALNUT AVENUE	192+00	192+99	LT.		99.0					
TP8A	CL-16	WALNUT AVENUE	193+51	195+65	LT.		214.0					
TP8A	CL-17	WALNUT AVENUE	196+10	197+00	LT.		90.0					
TP8A	CH-14	WALNUT AVENUE	192+00	192+99	RT.			99				
TP8A	CH-15	WALNUT AVENUE	192+45	192+99	RT.			54				
TP8A	CH-16	WALNUT AVENUE	193+51	194+05	RT.			54				
TP8A	CH-17	WALNUT AVENUE	193+51	195+61	RT.			210				
TP8A	CH-18	WALNUT AVENUE	194+61	195+54	RT.			93				
TP8A	CH-19	WALNUT AVENUE	196+10	197+00	RT.			90				
TP8A	CH-20	WALNUT AVENUE	196+19	197+23	RT.			104				
TP8A	SL-12	4TH STREET NE	40+40	40+40	LT./RT.				26			
TP8A	SL-13	WALNUT AVENUE	195+61	195+61	LT./RT.				29			
TP8A	SL-14	3RD STREET NE	49+61	49+61	LT./RT.				25			
TP8A	SL-15	WALNUT AVENUE	196+14	196+14	LT./RT.				5			
TP8A	CW-25	4TH STREET NE	40+36	40+36	LT./RT.					28		
TP8A	CW-26	4TH STREET NE	40+30	40+30	LT./RT.					36		
TP8A	CW-27	4TH STREET NE	39+61	39+61	LT./RT.					25		
TP8A	CW-28	4TH STREET NE	39+67	39+67	LT./RT.					25		
TP8A	CW-29	WALNUT AVENUE	195+65	195+65	LT./RT.					37		
TP8A	CW-30	WALNUT AVENUE	195+71	195+71	LT./RT.					36		
TP8A	CW-31	3RD STREET NE	50+36	50+36	LT./RT.					24		
TP8A	CW-32	3RD STREET NE	50+30	50+30	LT./RT.					28		
TP8A	CW-33	WALNUT AVENUE	196+04	196+04	LT./RT.					38		
TP8A	CW-34	WALNUT AVENUE	196+10	196+10	LT./RT.					35		
TP8A	CW-35	3RD STREET NE	49+71	49+71	LT./RT.					20		
TP8A	CW-36	3RD STREET NE	49+65	49+65	LT./RT.					21		
TP8A	TL-4	WALNUT AVENUE	194+61	194+96	RT.						115	
TP8A	TL-5	WALNUT AVENUE	196+19	196+54	RT.						115	
TP8A	PS-16	NOT USED										
TP8A	PS-17	WALNUT AVENUE	194+74	194+96	RT.							31
TP8A	PS-18	WALNUT AVENUE	194+88	195+08	RT.							28
TP8A	PS-19	WALNUT AVENUE	195+02	195+22	RT.							28
TP8A	PS-20	WALNUT AVENUE	195+16	195+36	RT.							28
TP8A	PS-21	NOT USED										
TP8A	PS-22	WALNUT AVENUE	196+32	196+54	RT.							31
TP8A	PS-23	WALNUT AVENUE	196+46	196+66	RT.							28
TP8A	PS-24	WALNUT AVENUE	196+60	196+80	RT.							28
TP8A	PS-25	WALNUT AVENUE	196+74	196+94	RT.							28
TP8A	PS-26	WALNUT AVENUE	196+88	197+08	RT.							28
						SUBTOTAL 451 OR	SUBTOTAL 403 OR					
TOTALS CARRIED TO SUB-SUMMARY						0.09	0.08	704	85	353	230	258

CALCULATED JMK
CHECKED WLC

PAVEMENT MARKING SUBSUMMARY

WALNUT & CHERRY
COMPLETE STREET
BIKE LANES

R:\Stark\SARTA\Task 3 Canton\STA\91592\traffic\sheets\91592TO020.dgn 6/28/2012 9:17:38 AM jroth

SHEET NO.	REFERENCE NO.	LOCATION	STATION FROM	STATION TO	SIDE	644 LANE ARROW EACH	644 DOTTED LINE, 4" (WHITE) FT	644 DOTTED LINE, 4" (YELLOW) FT	644 BIKE LANE SYMBOL MARKING EACH	644 PAVEMENT MARKING, MISC.: GREEN PAINTED LANE SQ FT	644 PAVEMENT MARKING, MISC.: GREEN BIKE BOX SQ FT
96	LA-44	WALNUT AVENUE	192+41		RT.	1					
96	LA-45	WALNUT AVENUE	192+91		RT.	1					
96	LA-46	WALNUT AVENUE	192+73		LT.	1					
96	LA-47	WALNUT AVENUE	192+91		RT.	1					
96	LA-48	4TH STREET NE	40+45		LT.	1					
96	LA-48A	4TH STREET NE	40+45		RT.	1					
96	LA-49	WALNUT AVENUE	193+58		LT.	1					
96	LA-50	WALNUT AVENUE	193+76		RT.	1					
96	LA-51	WALNUT AVENUE	195+38		LT.	1					
96	LA-52	WALNUT AVENUE	195+56		RT.	1					
96	LA-53	WALNUT AVENUE	195+94		RT.	1					
96	LA-54	WALNUT AVENUE	196+18		LT.	1					
96	LA-55	WALNUT AVENUE	196+36		RT.	1					
96	DL-27	WALNUT AVENUE	191+95	192+45	RT.		50				
96	DL-28	WALNUT AVENUE	192+99	193+51	LT.		52				
96	DL-29	WALNUT AVENUE	192+99	193+51	LT.			52			
96	DL-30	NOT USED									
96	DL-31	WALNUT AVENUE	192+99	193+51	RT.		52				
96	DL-32	WALNUT AVENUE	192+99	193+51	RT.		52				
96	DL-33	WALNUT AVENUE	194+05	194+55	RT.		50				
96	DL-34	WALNUT AVENUE	195+71	196+04	LT.		33				
96	DL-35	WALNUT AVENUE	195+71	196+04	LT.			33			
96	DL-36	WALNUT AVENUE	195+71	196+04	LT.		33				
96	DL-37	WALNUT AVENUE	195+71	196+04	RT.		33				
96	DL-38	WALNUT AVENUE	195+71	196+04	RT.		33				
96	BS-44	WALNUT AVENUE	192+79		RT.				1		
96	BS-45	WALNUT AVENUE	192+85		LT.				1		
96	BS-46	NOT USED									
96	BS-47	WALNUT AVENUE	193+70		LT.				1		
96	BS-48	WALNUT AVENUE	193+64		RT.				1		
96	BS-49	WALNUT AVENUE	195+50		LT.				1		
96	BS-50	WALNUT AVENUE	195+44		RT.				1		
96	BS-51	WALNUT AVENUE	195+93		RT.				1		
96	BS-52	WALNUT AVENUE	196+30		LT.				1		
96	BS-53	WALNUT AVENUE	196+24		RT.				1		
96	PL-9	WALNUT AVENUE	192+99	193+51	LT.					260	
96	PL-10	WALNUT AVENUE	192+99	193+51	RT.					260	
96	PL-11	WALNUT AVENUE	195+71	196+04	LT.					165	
96	PL-12	WALNUT AVENUE	195+71	196+04	RT.					165	
96	BB-4	WALNUT AVENUE	195+85	195+95	RT.						101
TOTALS CARRIED TO SUB-SUMMARY						13	388	85	9	850	101

CALCULATED JMK
CHECKED WLC

PAVEMENT MARKING SUBSUMMARY

WALNUT & CHERRY COMPLETE STREET BIKE LANES

R:\Stark\SARTA\Task 3 Canton\STA\91592\traffic\sheets\91592TQ021.dgn 6/28/2012 9:18:32 AM jroth

SHEET NO.	REFERENCE NO.	LOCATION	STATION FROM	STATION TO	SIDE	644 LANE LINE MILE	644 CENTER LINE MILE	644 CHANNELIZING LINE FT	644 STOP LINE FT	644 CROSSWALK LINE FT	644 TRANSVERSE/DIAGONAL LINE FT	644 PARKING LOT STALL MARKING FT
TP9A	LL-15	WALNUT AVENUE	197+00	200+77	LT.	377						
TP9A	LL-16	NOT USED										
TP9A	LL-17	WALNUT AVENUE	201+56	202+00	LT.	44						
TP9A	CL-18	WALNUT AVENUE	197+00	198+27	LT.		127					
TP9A	CL-19	WALNUT AVENUE	198+69	200+80	LT.		211					
TP9A	CL-20	WALNUT AVENUE	201+56	202+00	LT.		44					
TP9A	CH-21	WALNUT AVENUE	197+00	198+27	RT.			127				
TP9A	CH-22	WALNUT AVENUE	197+73	198+27	RT.			54				
TP9A	CH-23	WALNUT AVENUE	198+69	200+27	RT.			158				
TP9A	CH-24	WALNUT AVENUE	198+73	200+77	RT.			204				
TP9A	CH-25	WALNUT AVENUE	201+56	202+00	RT.			44				
TP9A	CH-26	WALNUT AVENUE	201+56	202+00	RT.			44				
TP9A	SL-16	2ND STREET NE	60+40	60+40	LT./RT.				22			
TP9A	SL-17	WALNUT AVENUE	200+77	200+77	LT./RT.				51			
TP9A	SL-18	WALNUT AVENUE	201+60	201+60	LT.				5			
TP9A	CW-37	2ND STREET NE	60+36	60+36	LT./RT.					24		
TP9A	CW-38	2ND STREET NE	60+30	60+30	LT./RT.					32		
TP9A	CW-39	2ND STREET NE	59+69	59+69	LT./RT.					21		
TP9A	CW-40	2ND STREET NE	59+63	59+63	LT./RT.					21		
TP9A	TL-6	WALNUT AVENUE	198+73	199+08	RT.						114	
TP9A	TL-7	WALNUT AVENUE	200+63	200+77	RT.						104	
TP9A	TL-8	WALNUT AVENUE	201+56	202+08	RT.						197	
TP9A	PS-27	WALNUT AVENUE	198+86	199+08	RT.							31
TP9A	PS-28	WALNUT AVENUE	199+00	199+20	RT.							28
TP9A	PS-29	WALNUT AVENUE	199+14	199+34	RT.							28
TP9A	PS-30	WALNUT AVENUE	199+28	199+48	RT.							28
TP9A	PS-31	WALNUT AVENUE	199+42	199+62	RT.							28
TP9A	PS-32	WALNUT AVENUE	199+57	199+77	RT.							28
TP9A	PS-33	WALNUT AVENUE	199+71	199+91	RT.							28
TP9A	PS-34	WALNUT AVENUE	199+85	200+05	RT.							28
TP9A	PS-35	WALNUT AVENUE	199+99	200+19	RT.							28
TP9A	PS-36	WALNUT AVENUE	200+13	200+33	RT.							28
TP9A	PS-37	WALNUT AVENUE	200+27	200+47	RT.							28
TP9A	PS-38	WALNUT AVENUE	200+41	200+63	RT.							31
TP9A	PS-39	WALNUT AVENUE	200+63	200+63	RT.							22
TP9A	PS-40	WALNUT AVENUE	201+91	202+08	RT.							23
						SUBTOTAL 421 OR	SUBTOTAL 382 OR					
TOTALS CARRIED TO SUB-SUMMARY						0.08	0.07	631	78	98	415	387

CALCULATED JMK
CHECKED WLC

PAVEMENT MARKING SUBSUMMARY

WALNUT & CHERRY
COMPLETE STREET
BIKE LANES

R:\Stark\SARTA\Task 3 Canton\STA\91592\traffic\sheets\91592TQ022.dgn 6/28/2012 9:18:58 AM jroth

SHEET NO.	REFERENCE NO.	LOCATION	STATION FROM	STATION TO	SIDE	644 LANE ARROW EACH	644 DOTTED LINE, 4" (WHITE) FT	644 DOTTED LINE, 4" (YELLOW) FT	644 BIKE LANE SYMBOL MARKING EACH	644 PAVEMENT MARKING, MISC.: GREEN PAINTED LANE SQ FT
97	LA-56	WALNUT AVENUE	197+69		RT.	1				
97	LA-57	WALNUT AVENUE	198+01		LT.	1				
97	LA-58	WALNUT AVENUE	198+19		RT.	1				
97	LA-59	WALNUT AVENUE	198+19		RT.	1				
97	LA-60	2ND STREET NE	60+45		LT.	1				
97	LA-60A	2ND STREET NE	60+45		RT.	1				
97	LA-61	WALNUT AVENUE	198+79		LT.	1				
97	LA-62	WALNUT AVENUE	198+97		RT.	1				
97	LA-63	WALNUT AVENUE	200+54		LT.	1				
97	LA-64	WALNUT AVENUE	200+74		RT.	1				
97	LA-65	WALNUT AVENUE	201+61		LT.	1				
97	LA-66	WALNUT AVENUE	201+79		RT.	1				
97	DL-39	WALNUT AVENUE	197+23	197+73	RT.		50			
97	DL-40	WALNUT AVENUE	198+27	198+69	LT.		42			
97	DL-41	WALNUT AVENUE	198+27	198+69	LT.			42		
97	DL-42	NOT USED								
97	DL-43	WALNUT AVENUE	198+27	198+69	RT.		42			
97	DL-44	WALNUT AVENUE	198+27	198+69	RT.		42			
97	DL-45	WALNUT AVENUE	200+27	200+77	RT.		50			
97	BS-54	WALNUT AVENUE	198+13		LT.				1	
97	BS-55	WALNUT AVENUE	198+07		RT.				1	
97	BS-56	NOT USED								
97	BS-57	WALNUT AVENUE	198+91		LT.				1	
97	BS-58	WALNUT AVENUE	198+85		RT.				1	
97	BS-59	WALNUT AVENUE	200+66		LT.				1	
97	BS-60	WALNUT AVENUE	200+62		RT.				1	
97	BS-61	WALNUT AVENUE	201+73		LT.				1	
97	BS-62	WALNUT AVENUE	201+67		RT.				1	
97	PL-13	WALNUT AVENUE	198+27	198+69	LT.					211
97	PL-14	WALNUT AVENUE	198+27	198+69	RT.					211
TOTALS CARRIED TO SUB-SUMMARY						12	226	42	8	422

CALCULATED JMK
CHECKED WLC

PAVEMENT MARKING SUBSUMMARY

WALNUT & CHERRY
COMPLETE STREET
BIKE LANES

R:\Stark\SARTA\Task 3 Canton\STA\91592\traffic\sheets\91592TQ023.dgn 6/28/2012 9:19:46 AM jroth

SHEET NO.	REFERENCE NO.	LOCATION	STATION FROM	STATION TO	SIDE	644 LANE LINE MILE	644 CENTER LINE MILE	644 CHANNELIZING LINE FT	644 STOP LINE FT	644 CROSSWALK LINE FT	644 TRANSVERSE/DIAGONAL LINE FT	644 PARKING LOT STALL MARKING FT
TP10A	LL-18	WALNUT AVENUE	202+00	203+62	LT.	162.00						
TP10A	CL-21	WALNUT AVENUE	202+00	203+62	LT.		162.00					
TP10A	CL-22	WALNUT AVENUE	204+13	206+15	LT.		204.00					
TP10A	CH-27	WALNUT AVENUE	202+00	203+62	RT.			162				
TP10A	CH-28	WALNUT AVENUE	202+00	203+39	RT.			139				
TP10A	CH-29	WALNUT AVENUE	204+13	206+15	LT.			204				
TP10A	CH-30	WALNUT AVENUE	204+13	206+15	RT.			202				
TP10A	CH-30A	WALNUT AVENUE	204+13	205+65	RT.			152				
TP10A	CH-30B	WALNUT AVENUE	205+65	205+65	RT.			2				
TP10A	CH-31	WALNUT AVENUE	205+68	206+15	LT.			49				
TP10A	CH-32	WALNUT AVENUE	205+68	206+15	RT.			47				
TP10A	SL-19	2ND STREET SE	80+34	80+34	LT./RT.				21			
TP10A	SL-20	WALNUT AVENUE	206+15	206+15	LT./RT.				54			
TP10A	SL-21	3RD STREET SE	89+60	89+60	LT./RT.				40			
TP10A	CW-41	2ND STREET SE	80+30	80+30	LT./RT.					23		
TP10A	CW-42	2ND STREET SE	80+24	80+24	LT./RT.					29		
TP10A	CW-43	2ND STREET SE	79+72	79+72	LT./RT.					20		
TP10A	CW-44	2ND STREET SE	79+66	79+66	LT./RT.					20		
TP10A	CW-45	WALNUT AVENUE	206+19	206+19	LT./RT.					69		
TP10A	CW-46	WALNUT AVENUE	206+25	206+25	LT./RT.					72		
TP10A	CW-47	3RD STREET SE	90+60	90+69	LT./RT.					44		
TP10A	CW-48	3RD STREET SE	90+52	90+61	LT./RT.					46		
TP10A	CW-49	WALNUT AVENUE	206+70	206+88	LT.					39		
TP10A	CW-50	WALNUT AVENUE	206+75	206+92	LT.					38		
TP10A	CW-51	WALNUT AVENUE	206+88	206+88	LT./RT.					19		
TP10A	CW-52	WALNUT AVENUE	206+94	206+94	LT./RT.					17		
TP10A	CW-53	3RD STREET SE	89+70	89+70	LT./RT.					41		
TP10A	CW-54	3RD STREET SE	89+64	89+64	LT./RT.					40		
TP10A	TL-9	WALNUT AVENUE	204+13	205+65	RT.						78	
TP10A	TL-10	WALNUT AVENUE	205+68	206+15	LT./RT.						37	
TP10A	PS-41	WALNUT AVENUE	202+00	202+20	RT.							28
TP10A	PS-42	WALNUT AVENUE	202+14	202+34	RT.							28
TP10A	PS-43	WALNUT AVENUE	202+28	202+48	RT.							28
TP10A	PS-44	WALNUT AVENUE	202+42	202+62	RT.							28
TP10A	PS-45	WALNUT AVENUE	202+57	202+77	RT.							28
TP10A	PS-46	WALNUT AVENUE	202+71	202+91	RT.							28
TP10A	PS-47	WALNUT AVENUE	202+85	203+05	RT.							28
TP10A	PS-48	WALNUT AVENUE	202+99	203+19	RT.							28
						SUBTOTAL 162.00 OR	SUBTOTAL 366.00 OR					
TOTALS CARRIED TO SUB-SUMMARY						0.03	0.07	957	115	517	115	224

CALCULATED JMK
CHECKED WLC

PAVEMENT MARKING SUBSUMMARY

WALNUT & CHERRY
COMPLETE STREET
BIKE LANES

R:\Stark\SARTA\Task 3 Canton\STA\91592\traffic\sheets\91592TQ024.dgn 6/28/2012 9:20:08 AM jroth

SHEET NO.	REFERENCE NO.	LOCATION	STATION FROM	STATION TO	SIDE	644 LANE ARROW EACH	644 DOTTED LINE, 4" (WHITE) FT	644 DOTTED LINE, 4" (YELLOW) FT	644 BIKE LANE SYMBOL MARKING EACH	644 PAVEMENT MARKING, MISC.: GREEN PAINTED LANE SQ FT
98	LA-67	WALNUT AVENUE	203+36		LT.	1				
98	LA-68	WALNUT AVENUE	203+54		RT.	1				
98	LA-69	2ND STREET SE	80+39		LT.	1				
98	LA-69A	2ND STREET SE	80+39		RT.	1				
98	LA-70	WALNUT AVENUE	204+21		LT.	1				
98	LA-71	WALNUT AVENUE	204+30		LT.	1				
98	LA-72	WALNUT AVENUE	204+30		RT.	1				
98	LA-73	WALNUT AVENUE	204+39		RT.	1				
98	LA-74	WALNUT AVENUE	205+35		LT.	1				
98	LA-75	WALNUT AVENUE	205+35		RT.	1				
98	LA-75A	WALNUT AVENUE	205+35		RT.	1				
98	LA-76	WALNUT AVENUE	205+99		LT.	1				
98	LA-77	WALNUT AVENUE	206+10		LT.	1				
98	LA-78	WALNUT AVENUE	206+10		LT.	1				
98	LA-79	WALNUT AVENUE	206+10		RT.	1				
98	LA-80	WALNUT AVENUE	206+10		RT.	1				
98	DL-46	WALNUT AVENUE	203+62	204+13	LT.		51			
98	DL-47	WALNUT AVENUE	203+62	204+13	LT.			51		
98	DL-48	WALNUT AVENUE	203+62	204+13	LT.		51			
98	DL-49	WALNUT AVENUE	203+62	204+13	RT.		51			
98	DL-50	WALNUT AVENUE	203+62	204+13	RT.		51			
98	DL-51	WALNUT AVENUE	206+25	206+76	LT.		57			
98	DL-52	WALNUT AVENUE	206+25	206+81	LT.		62			
98	DL-53	WALNUT AVENUE	206+25	206+88	RT.		63			
98	BS-63	WALNUT AVENUE	203+48		LT.				1	
98	BS-64	WALNUT AVENUE	203+42		RT.				1	
98	BS-65	NOT USED								
98	BS-66	WALNUT AVENUE	204+33		LT.				1	
98	BS-67	WALNUT AVENUE	204+27		RT.				1	
98	BS-68	WALNUT AVENUE	206+10		LT.				1	
98	BS-69	WALNUT AVENUE	205+98		RT.				1	
98	PL-15	WALNUT AVENUE	203+62	204+13	LT.					256
98	PL-16	WALNUT AVENUE	203+62	204+13	RT.					257
TOTALS CARRIED TO SUB-SUMMARY						16	386	51	6	513

CALCULATED JMK
CHECKED WLC

PAVEMENT MARKING SUBSUMMARY

WALNUT & CHERRY COMPLETE STREET BIKE LANES

R:\Stark\SARTA\Task 3 Canton\STA\91592\traffic\sheets\91592TQ025.dgn 6/28/2012 9:20:57 AM jroth

SHEET NO.	REFERENCE NO.	LOCATION	STATION FROM	STATION TO	SIDE	644 CHANNELIZING LINE FT	644 TRANSVERSE/DIAGONAL LINE FT	644 PARKING LOT STALL MARKING FT	644 LANE ARROW EACH
99	CH-33	WALNUT AVENUE	206+98	207+37	℄	39			
99	CH-34	WALNUT AVENUE	207+53	208+78	RT.	125			
99	CH-35	WALNUT AVENUE	208+78	208+95	℄	17			
99	CH-36	WALNUT AVENUE	208+95	208+95	LT.	33			
99	TL-11	WALNUT AVENUE	206+98	207+37	LT.		116		
99	TL-12	WALNUT AVENUE	208+58	208+95	LT.		195		
99	PS-49	WALNUT AVENUE	207+17	207+37	LT.			28	
99	PS-50	WALNUT AVENUE	207+31	207+49	LT.			25	
99	PS-51	WALNUT AVENUE	207+45	207+63	LT.			25	
99	PS-52	WALNUT AVENUE	207+59	207+77	LT.			25	
99	PS-53	WALNUT AVENUE	207+73	207+91	LT.			25	
99	PS-54	WALNUT AVENUE	207+87	208+05	LT.			25	
99	PS-55	WALNUT AVENUE	208+02	208+20	LT.			25	
99	PS-56	WALNUT AVENUE	208+16	208+34	LT.			25	
99	PS-57	WALNUT AVENUE	208+30	208+48	LT.			25	
99	PS-58	WALNUT AVENUE	208+44	208+62	LT.			25	
99	PS-59	WALNUT AVENUE	208+58	208+78	LT.			28	
99	LA-81	WALNUT AVENUE	207+68		RT.				1
99	LA-82	WALNUT AVENUE	208+68		RT.				1
TOTALS CARRIED TO SUB-SUMMARY						214	311	281	2

CALCULATED JMK
CHECKED WLC

PAVEMENT MARKING SUBSUMMARY

WALNUT & CHERRY
COMPLETE STREET
BIKE LANES

R:\Stark\SARTA\Task 3 Canton\STA\91592\traffic\sheets\91592TQ026.dgn 6/28/2012 9:21:16 AM jroth

PAVEMENT MARKING LEGEND

- (BB-X) BIKE BOX, GREEN
- (BS-X) BIKE SYMBOL
- (CH-X) CHANNELIZING LINE
- (CL-X) CENTER LINE, SOLID, DOUBLE
- (CW-X) CROSSWALK LINE
- (DL-X) DOTTED LINE
- (LA-X) LANE ARROW
- (LL-X) LANE LINE
- (PL-X) PAINTED LANE, GREEN
- (PS-X) PARKING STALL LINE
- (SL-X) STOP LINE
- (TL-X) TRANSVERSE/DIAGONAL LINE

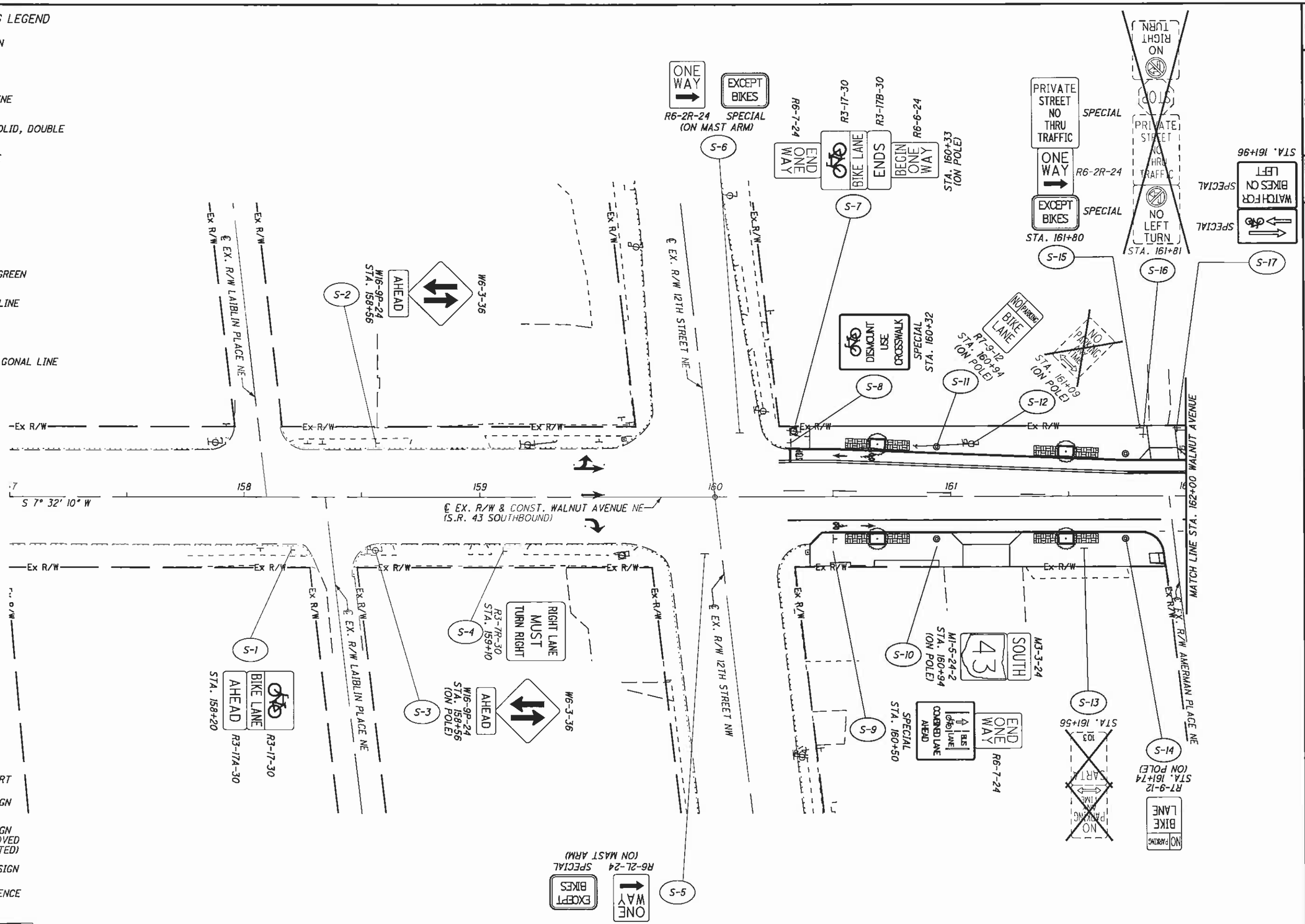

SIGNING LEGEND

- SIGN SUPPORT
- EXISTING SIGN TO REMAIN
- EXISTING SIGN TO BE REMOVED (OR REERECTED)
- PROPOSED SIGN
- (S-X) SIGN REFERENCE NUMBER

CROSS REFERENCE	
SHEET	DESCRIPTION
78	LEGEND
52-62	SIGNING QUANTITIES
63-77	MARKING QUANTITIES

SIGNING PLAN - WALNUT AVENUE
STA. 157+00 TO STA. 162+00

WALNUT & CHERRY COMPLETE STREET BIKE LANES

R:\Stark\SARTA\Task 3 Canton\STA\91592\traffic\sheets\91592TP001.dgn 6/28/2012 8:39:07 AM jroth

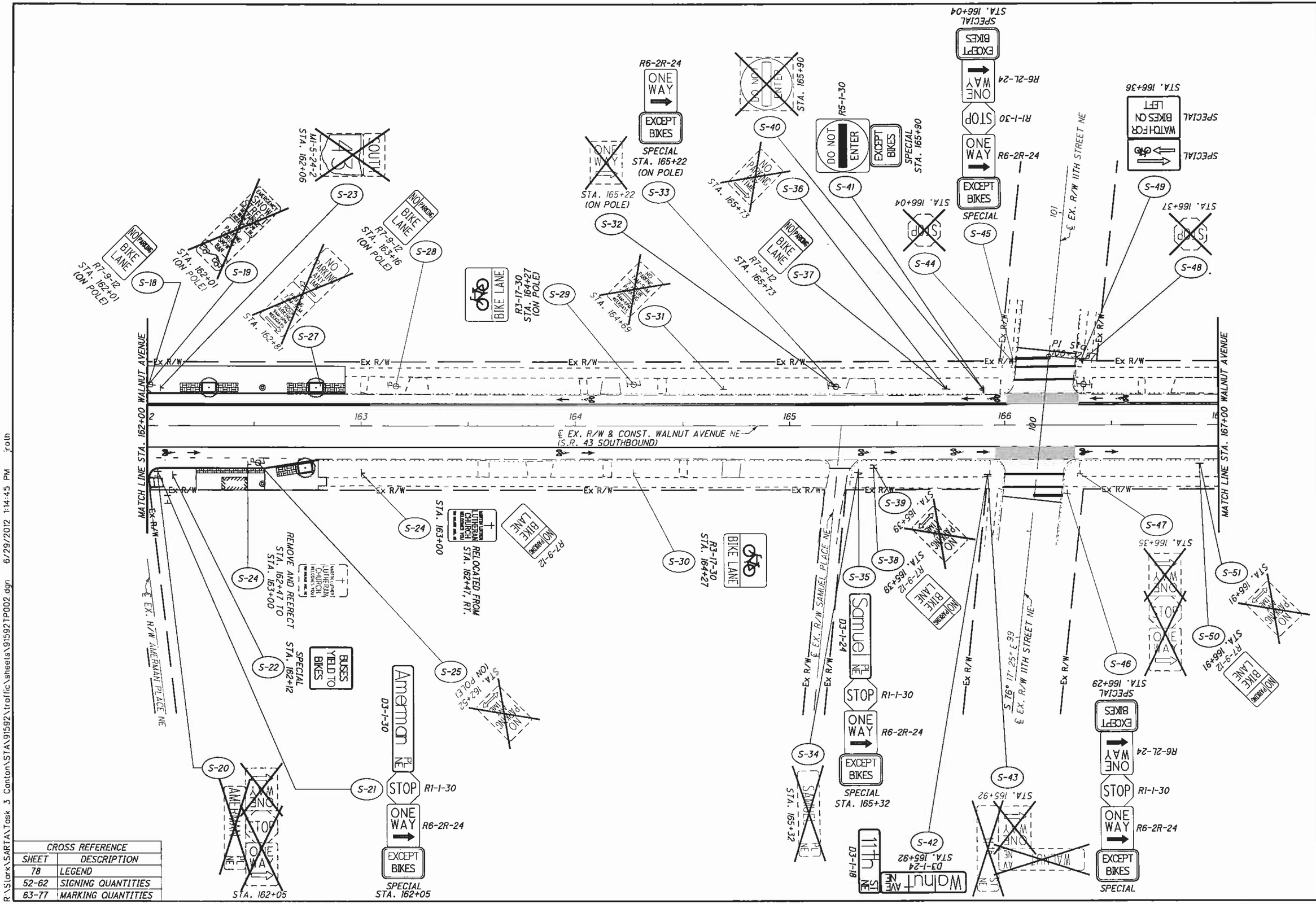

CROSS REFERENCE	
SHEET	DESCRIPTION
78	LEGEND
52-62	SIGNING QUANTITIES
63-77	MARKING QUANTITIES

R:\Stark\SARTA\Task 3 Canton\STA\91592\traffic\sheets\91592TP002.dgn 6/29/2012 1:14:45 PM jroth

CALCULATED JMK
CHECKED WLC

HORIZONTAL SCALE IN FEET 0 10 20 40

SIGNING PLAN - WALNUT AVENUE
STA. 162+00 TO STA. 167+00

WALNUT & CHERRY COMPLETE STREET BIKE LANES

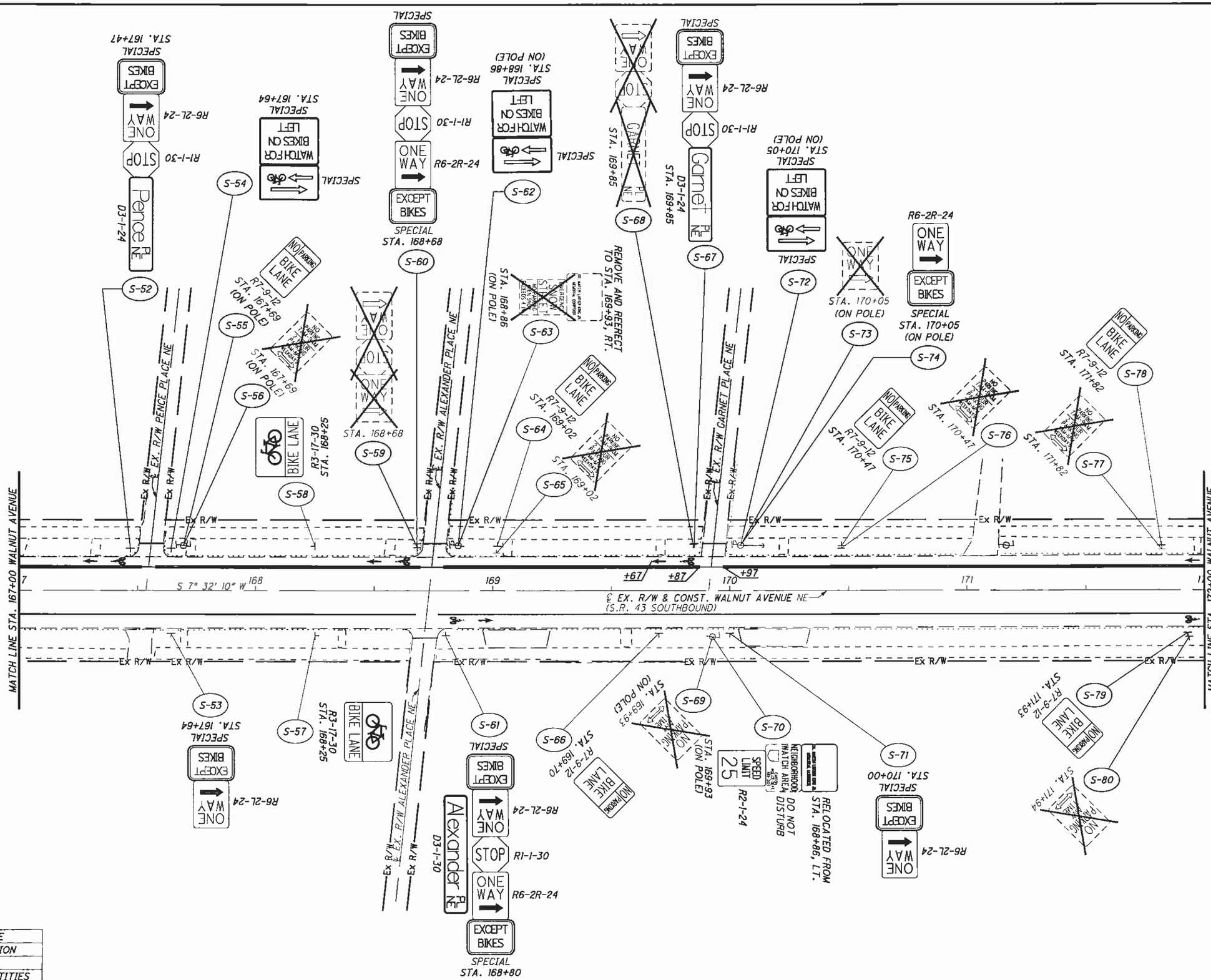

CROSS REFERENCE	
SHEET	DESCRIPTION
78	LEGEND
52-62	SIGNING QUANTITIES
63-77	MARKING QUANTITIES

CALCULATED JMK
CHECKED WLC

HORIZONTAL SCALE IN FEET 0 10 20 40

SIGNING PLAN - WALNUT AVENUE
STA. 167+00 TO STA. 172+00

WALNUT & CHERRY COMPLETE STREET BIKE LANES

R:\Stark\SARTA\Task 3 Canton\STA\91592\traffic\sheets\91592TP003.dgn 6/28/2012 8:41:43 AM jroth

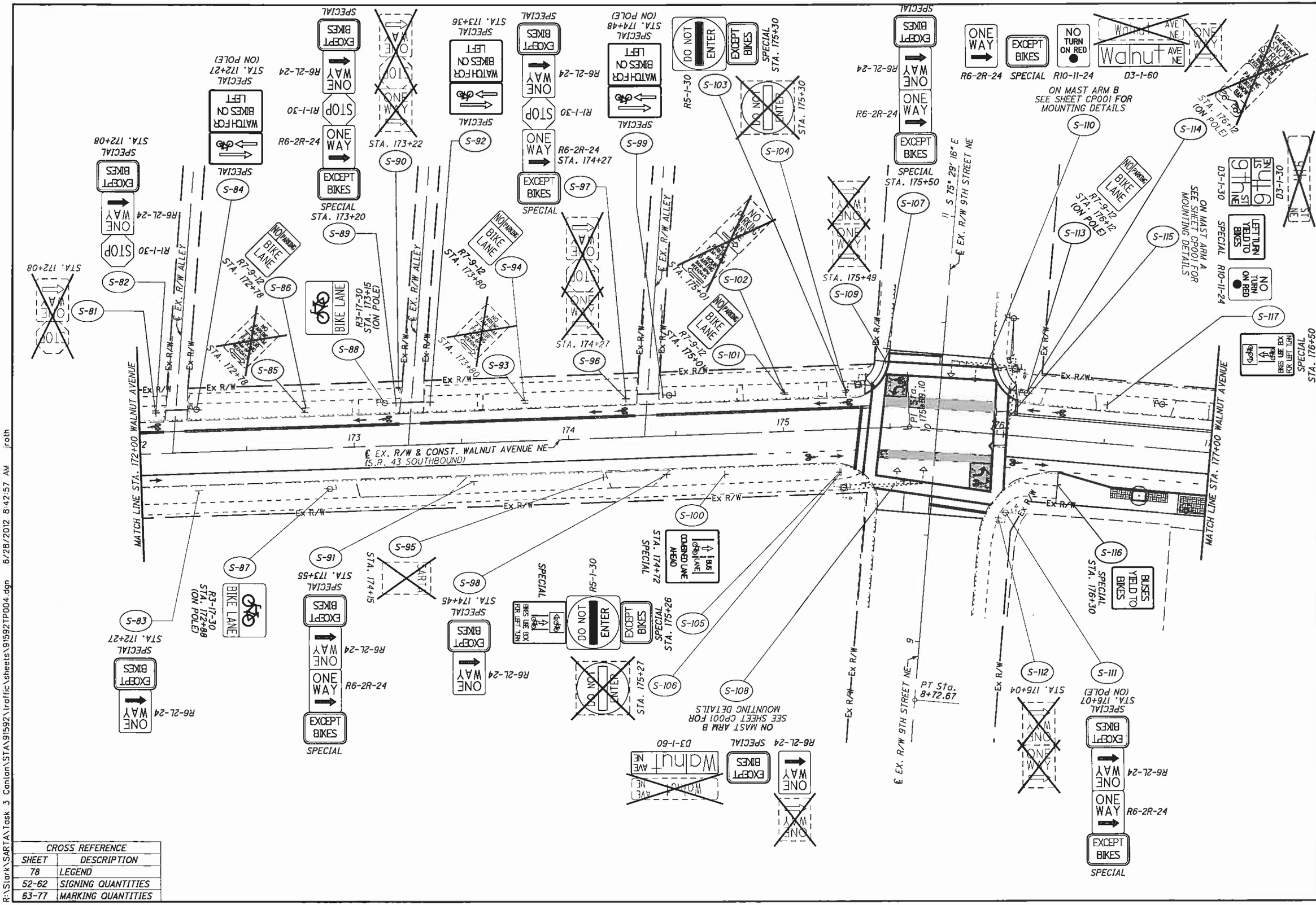

CROSS REFERENCE	
SHEET	DESCRIPTION
78	LEGEND
52-62	SIGNING QUANTITIES
63-77	MARKING QUANTITIES

CALCULATED JMK
CHECKED WLC

SIGNING PLAN - WALNUT AVENUE
STA. 172+00 TO STA. 177+00

WALNUT & CHERRY COMPLETE STREET BIKE LANES

R:\Stark\SARTA\Task 3 Canton\STA\91592\traffic\sheets\91592TP004.dgn 8/28/2012 8:42:57 AM jroth

R:\Stark\SARTA\Task 3 Canton\STA\91592\traffic\sheets\91592TP005.dgn 6/28/2012 8:44:08 AM jroth

CROSS REFERENCE	
SHEET	DESCRIPTION
78	LEGEND
52-62	SIGNING QUANTITIES
63-77	MARKING QUANTITIES

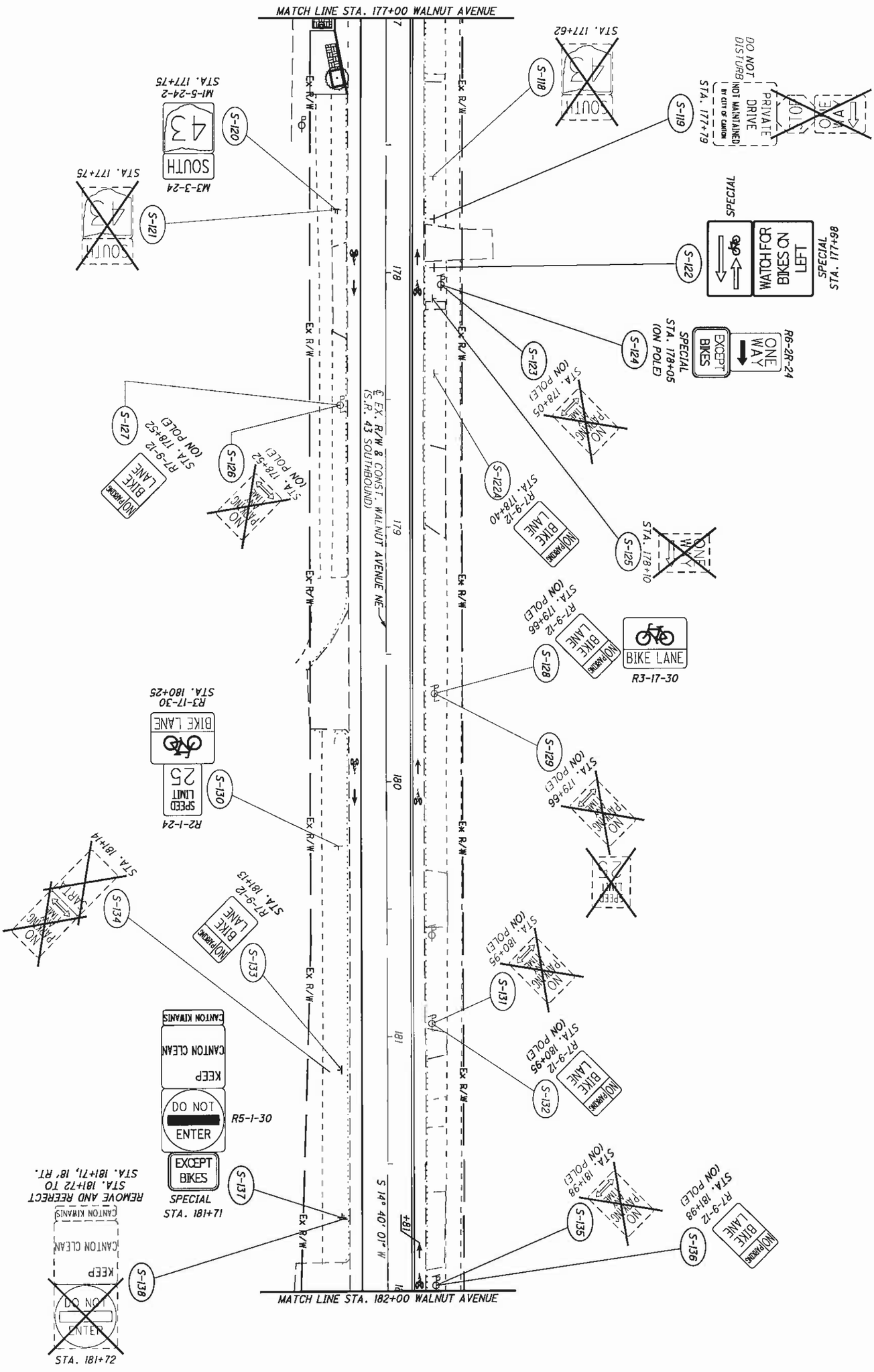

82/135	WALNUT & CHERRY COMPLETE STREET BIKE LANES	SIGNING PLAN - WALNUT AVENUE STA. 177+00 TO STA. 182+00	CALCULATED JMK CHECKED WLC HORIZONTAL SCALE IN FEET 0 10 20 40

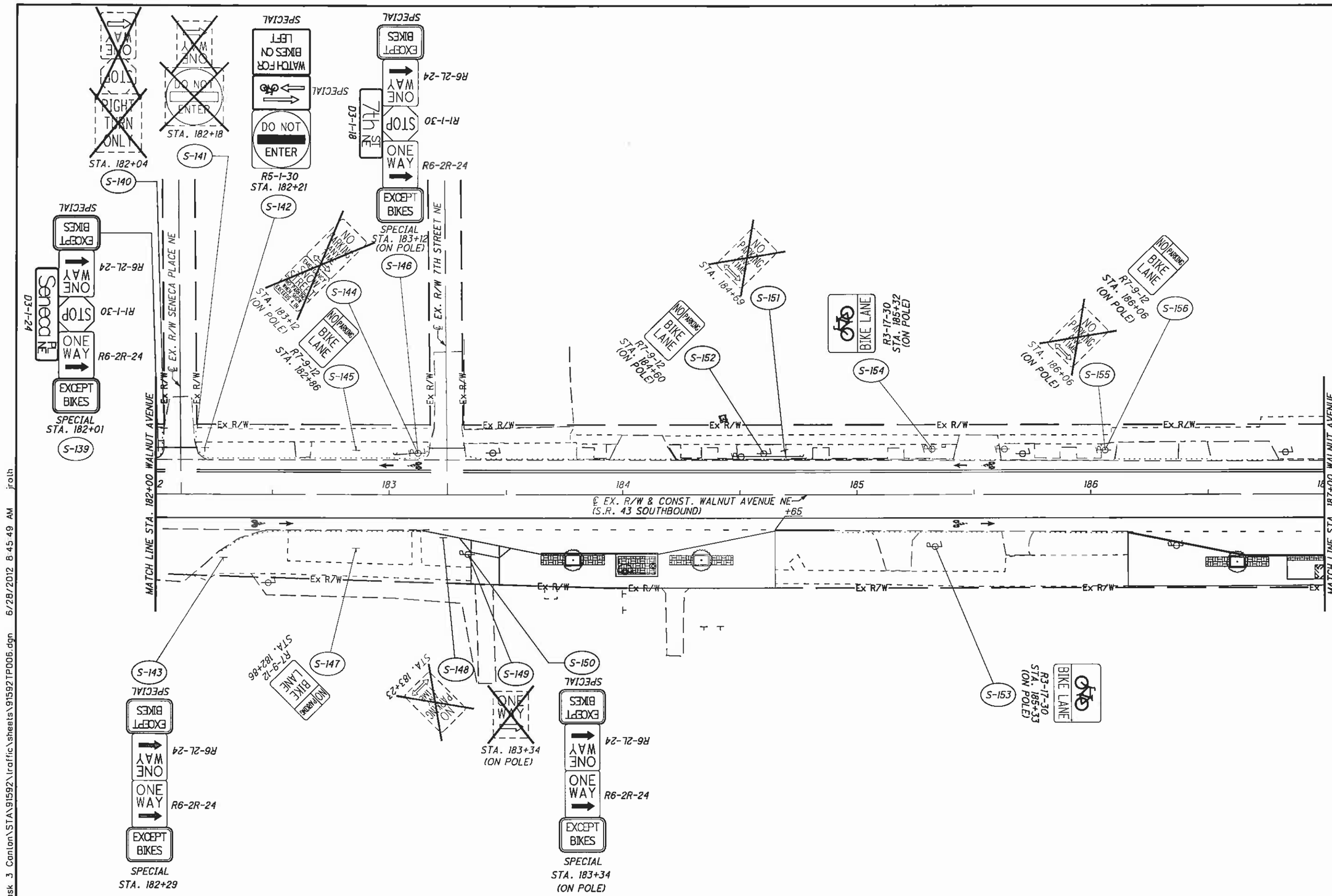

CROSS REFERENCE	
SHEET	DESCRIPTION
78	LEGEND
52-62	SIGNING QUANTITIES
63-77	MARKING QUANTITIES

CALCULATED JMK
CHECKED WLC

HORIZONTAL SCALE IN FEET 0 10 20 40

SIGNING PLAN - WALNUT AVENUE
STA. 182+00 TO STA. 187+00

WALNUT & CHERRY COMPLETE STREET BIKE LANES

R:\Stark\SARTA\Task 3 Canton\STA\91592\traffic\sheets\91592TP006.dgn 6/28/2012 8:45:49 AM jroth

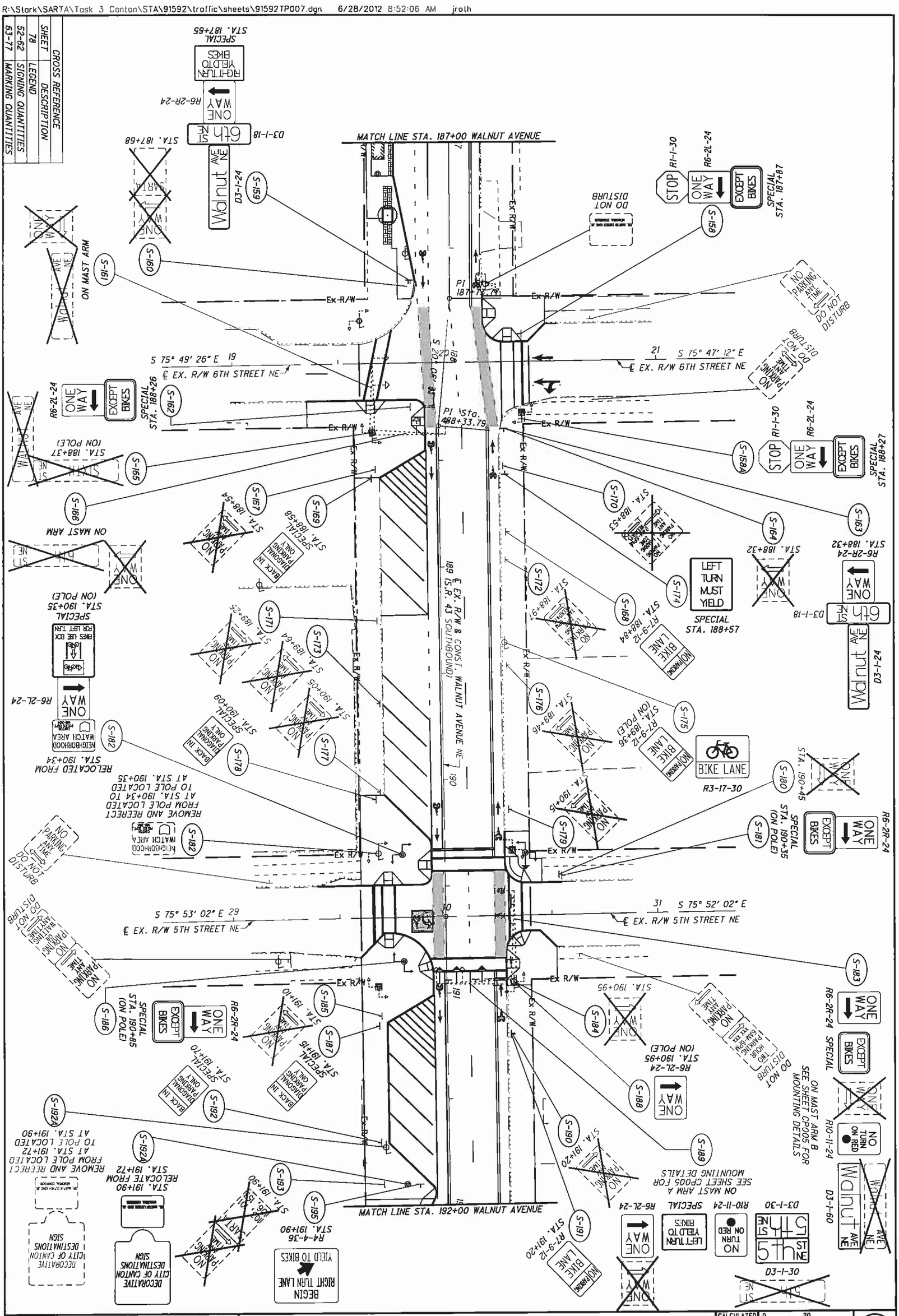

84 / 135	WALNUT & CHERRY COMPLETE STREET BIKE LANES	SIGNING PLAN - WALNUT AVENUE STA. 187+00 TO STA. 192+00	CALCULATED JMK / CHECKED WLC	HORIZONTAL SCALE IN FEET 0 10 20 40

SHEET	DESCRIPTION
63-77	CROSS REFERENCE
78	LEGEND
52-62	SIGNING QUANTITIES
63-77	MARKING QUANTITIES

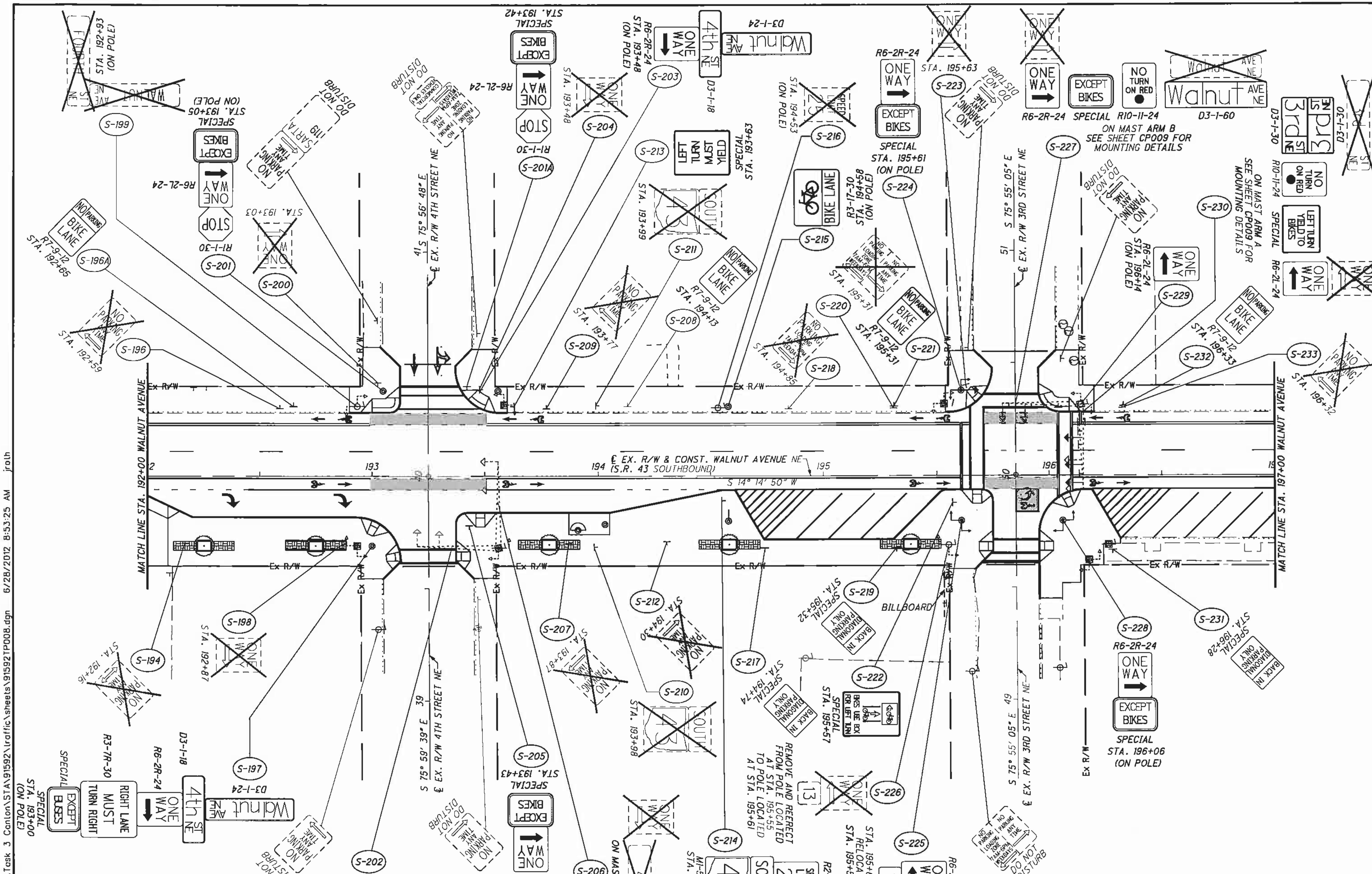

CROSS REFERENCE	
SHEET	DESCRIPTION
78	LEGEND
52-62	SIGNING QUANTITIES
63-77	MARKING QUANTITIES

CALCULATED JMK
CHECKED WLC

SIGNING PLAN - WALNUT AVENUE
STA. 192+00 TO STA. 197+00

WALNUT & CHERRY COMPLETE STREET BIKE LANES

R:\Stark\SARTA\Task 3 Canton\STA\91592\traffic\sheets\91592TP008.dgn 6/28/2012 8:53:25 AM jrath

R:\Stark\SARTA\Task 3 Canton\STA\91592\traffic\sheets\91592TP009.dgn 6/28/2012 8:54:37 AM jroth

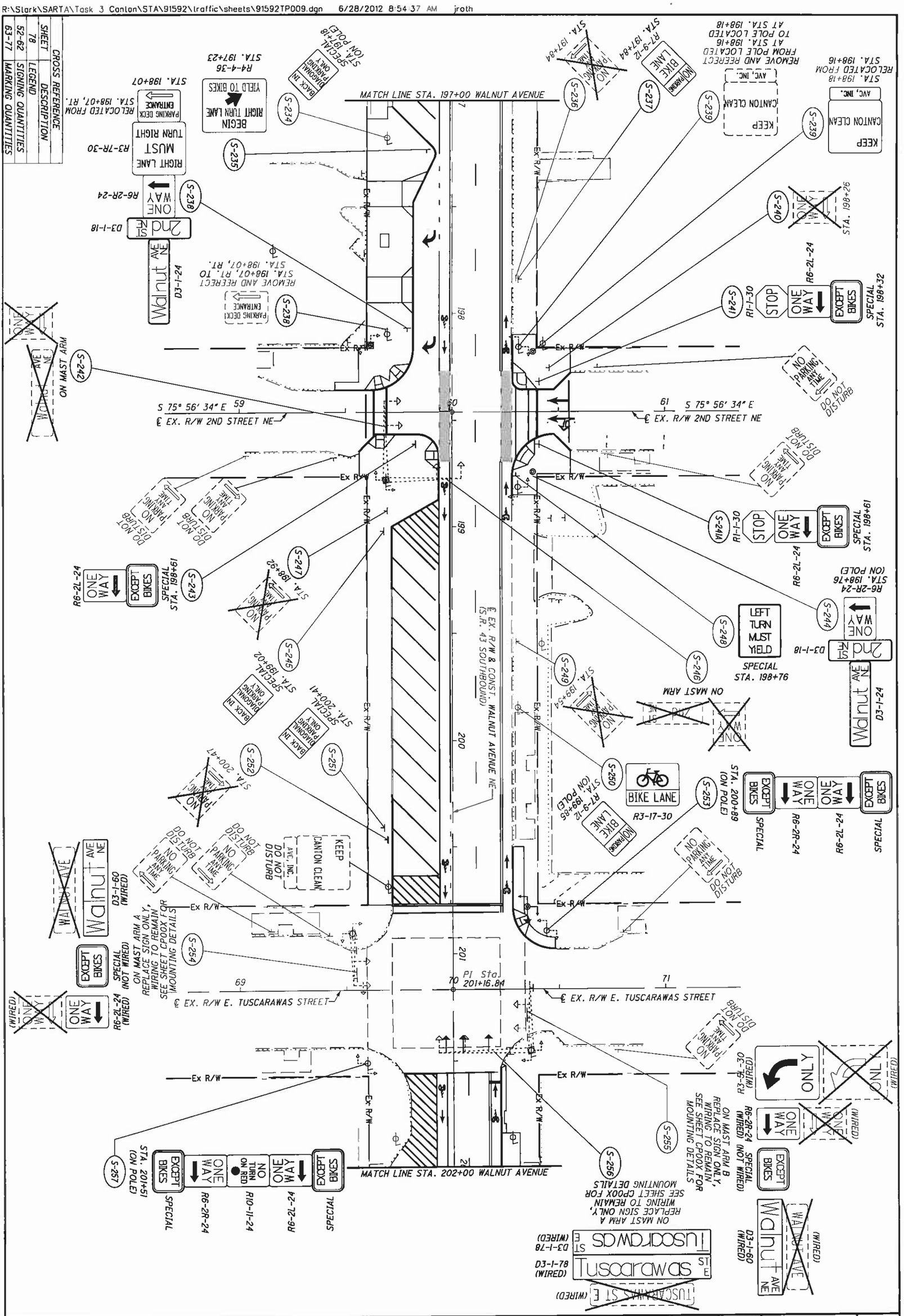

86 / 135	WALNUT & CHERRY COMPLETE STREET BIKE LANES	SIGNING PLAN - WALNUT AVENUE STA. 197+00 TO STA. 202+00	CALCULATED JMK / CHECKED WLC	HORIZONTAL SCALE IN FEET

R:\Stark\SARTA\Task 3 Canton\STA\91592\traffic\sheets\91592TP010.dgn 6/28/2012 8:56:04 AM jroth

CROSS REFERENCE	
SHEET	DESCRIPTION
78	LEGEND
52-62	SIGNING QUANTITIES
63-77	MARKING QUANTITIES

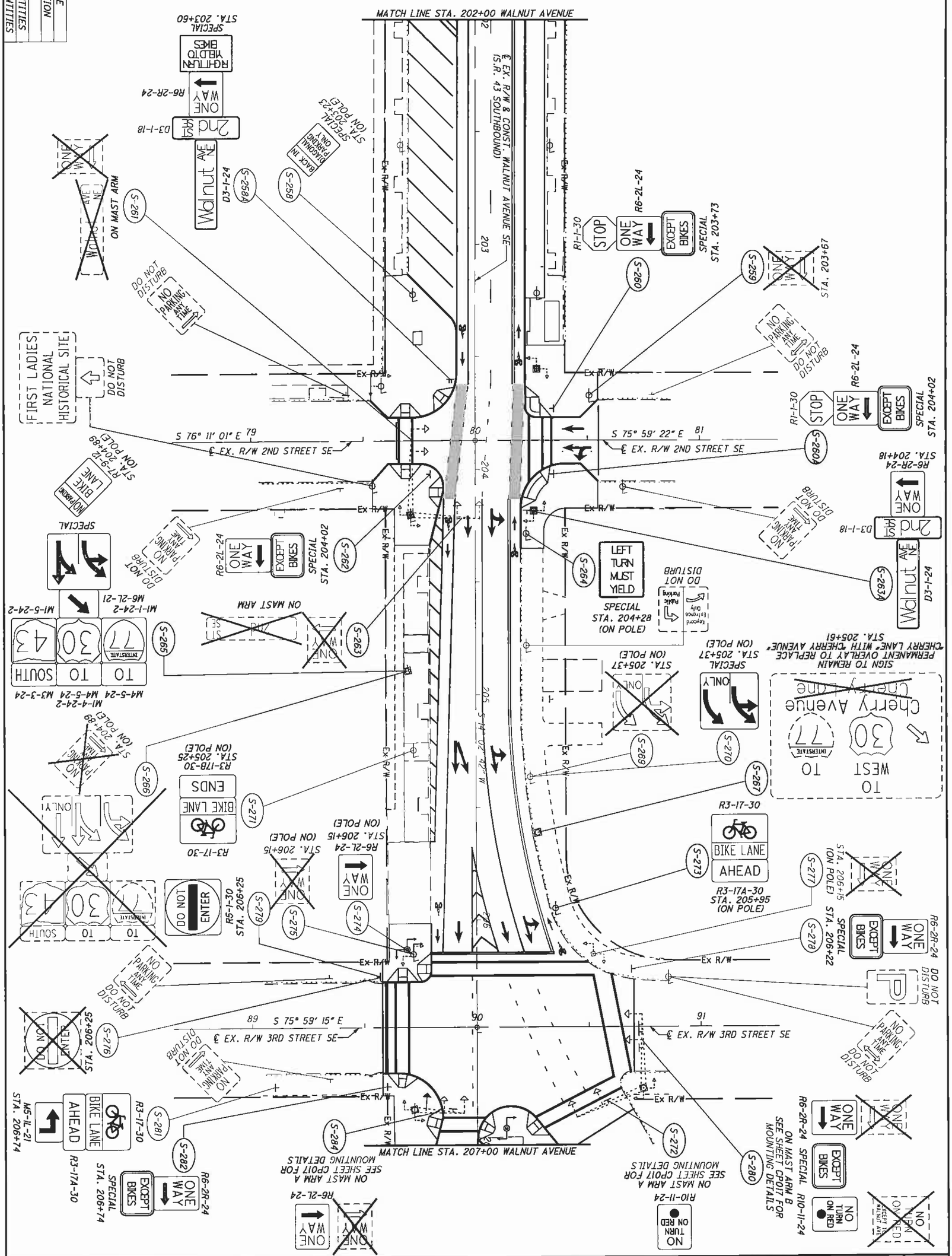

87 / 135	WALNUT & CHERRY COMPLETE STREET BIKE LANES	SIGNING PLAN - WALNUT AVENUE STA. 202+00 TO STA. 207+00	CALCULATED JMK / CHECKED WLC / HORIZONTAL SCALE IN FEET 0 10 20 40

CROSS REFERENCE	
SHEET	DESCRIPTION
78	LEGEND
52-62	SIGNING QUANTITIES
63-77	MARKING QUANTITIES

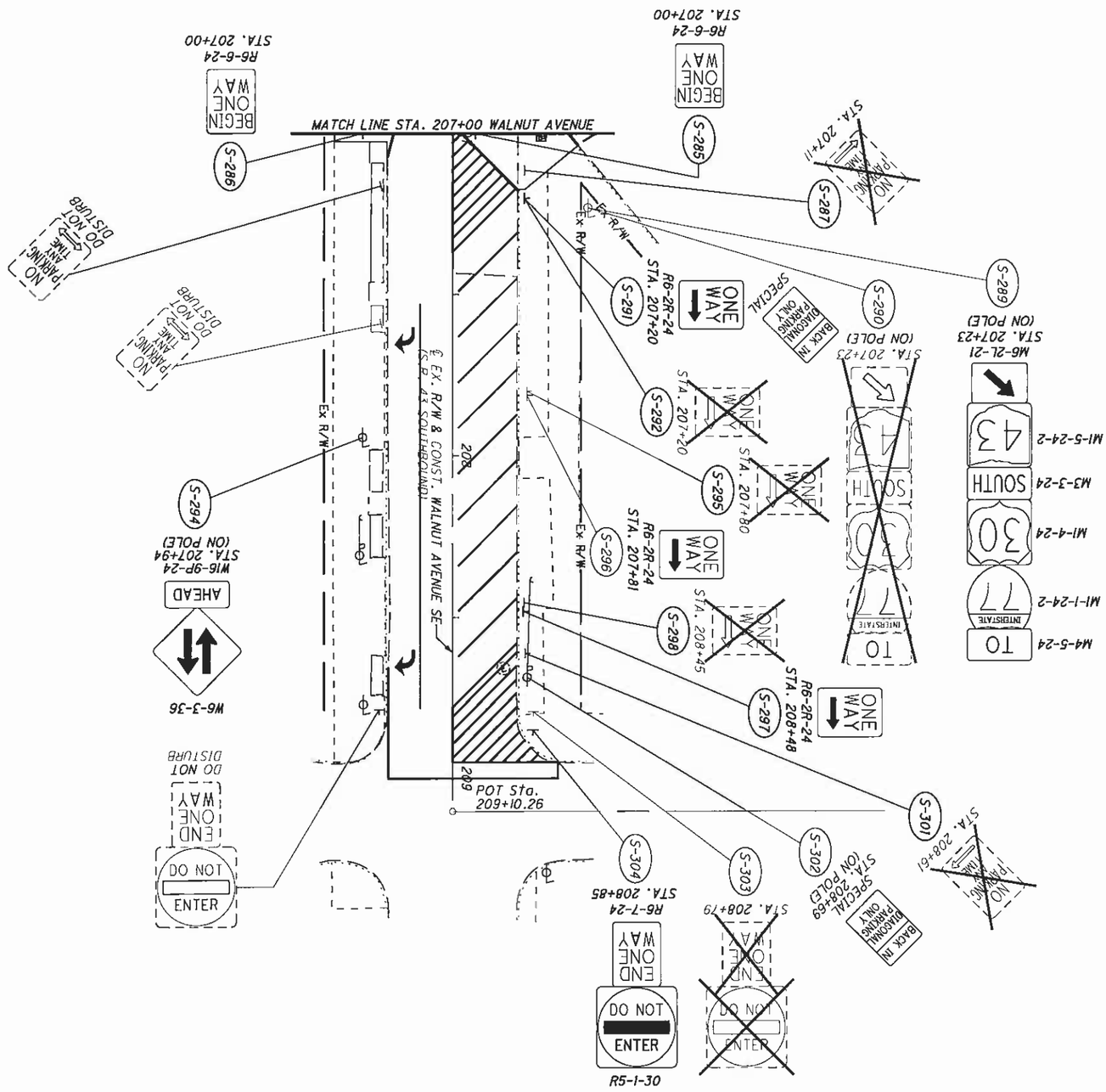

88 / 135	WALNUT & CHERRY COMPLETE STREET BIKE LANES	SIGNING PLAN - WALNUT AVENUE STA. 207+00 TO STA. 212+00	CALCULATED JMK / CHECKED WLC / HORIZONTAL SCALE IN FEET (0, 10, 20, 40)

PAVEMENT MARKING LEGEND

- (BB-X) BIKE BOX, GREEN
- (BS-X) BIKE SYMBOL
- (CH-X) CHANNELIZING LINE
- (CL-X) CENTER LINE, SOLID, DOUBLE
- (CW-X) CROSSWALK LINE
- (DL-X) DOTTED LINE
- (LA-X) LANE ARROW
- (LL-X) LANE LINE
- (PL-X) PAINTED LANE, GREEN
- (PS-X) PARKING STALL LINE
- (SL-X) STOP LINE
- (TL-X) TRANSVERSE/DIAGONAL LINE
- (IM-X) ISLAND MARKING
- (W-X) WORD ON PAVEMENT, 36"

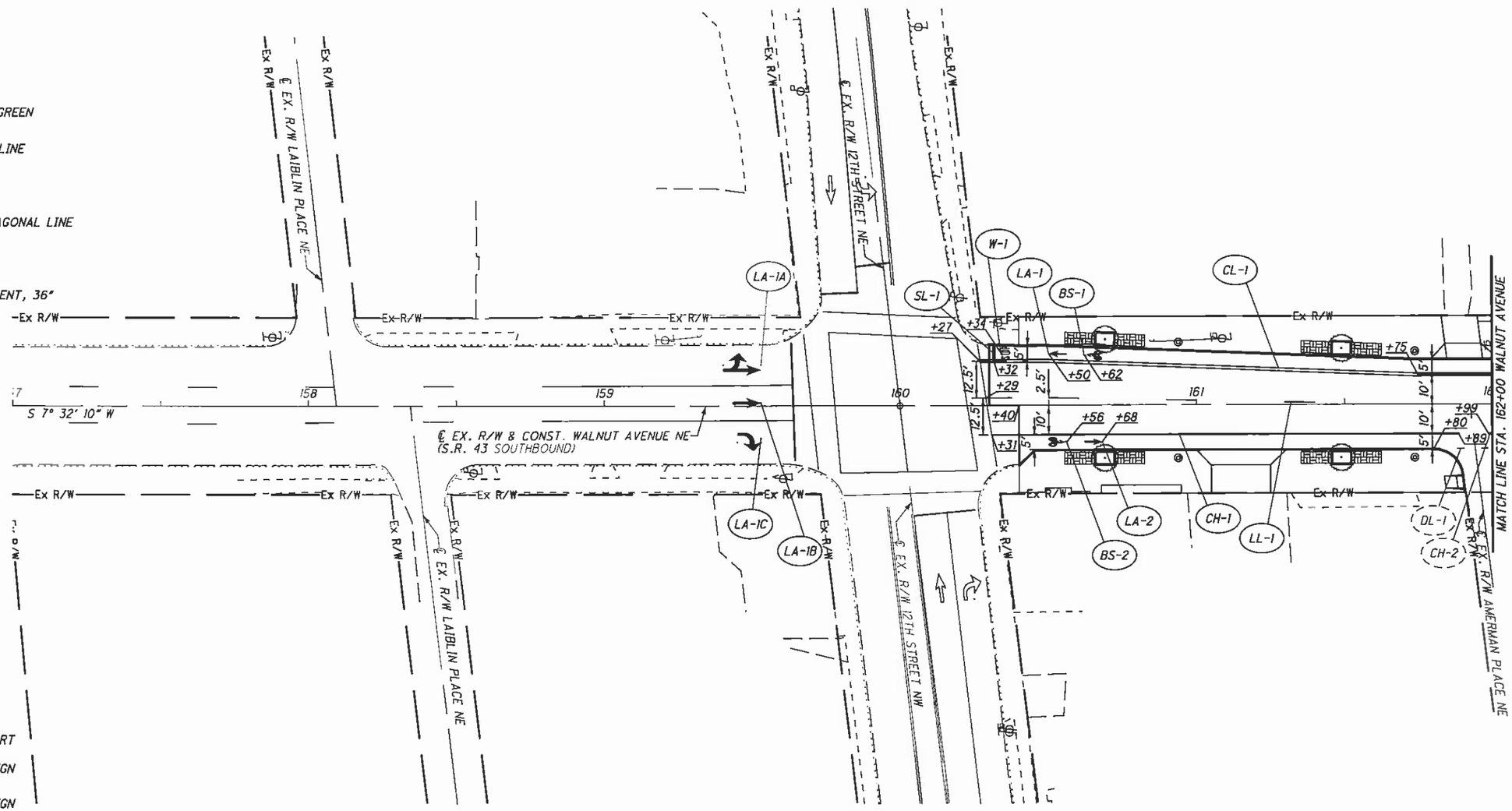

SIGNING LEGEND

- SIGN SUPPORT
- EXISTING SIGN TO REMAIN
- EXISTING SIGN TO BE REMOVED (OR REERECTED)
- PROPOSED SIGN
- (S-X) SIGN REFERENCE NUMBER

CROSS REFERENCE	
SHEET	DESCRIPTION
89	LEGEND
52-62	SIGNING QUANTITIES
63-77	MARKING QUANTITIES

HORIZONTAL SCALE IN FEET 0 10 20 40

CALCULATED JMK
CHECKED WLC

PAVEMENT MARKING PLAN - WALNUT AVENUE
STA. 157+00 TO STA. 162+00

WALNUT & CHERRY COMPLETE STREET BIKE LANES

R:\Stark\SARTA\Task 3 Canton\STA\91592\traffic\sheets\91592TP001A.dgn 6/28/2012 8:39:29 AM jroth

R:\Stark\SARTA\Task 3 Canton\STA\91592\traffic\sheets\91592TP002A.dgn 6/28/2012 8:40:52 AM jroth

CROSS REFERENCE	
SHEET	DESCRIPTION
89	LEGEND
52-62	SIGNING QUANTITIES
63-77	MARKING QUANTITIES

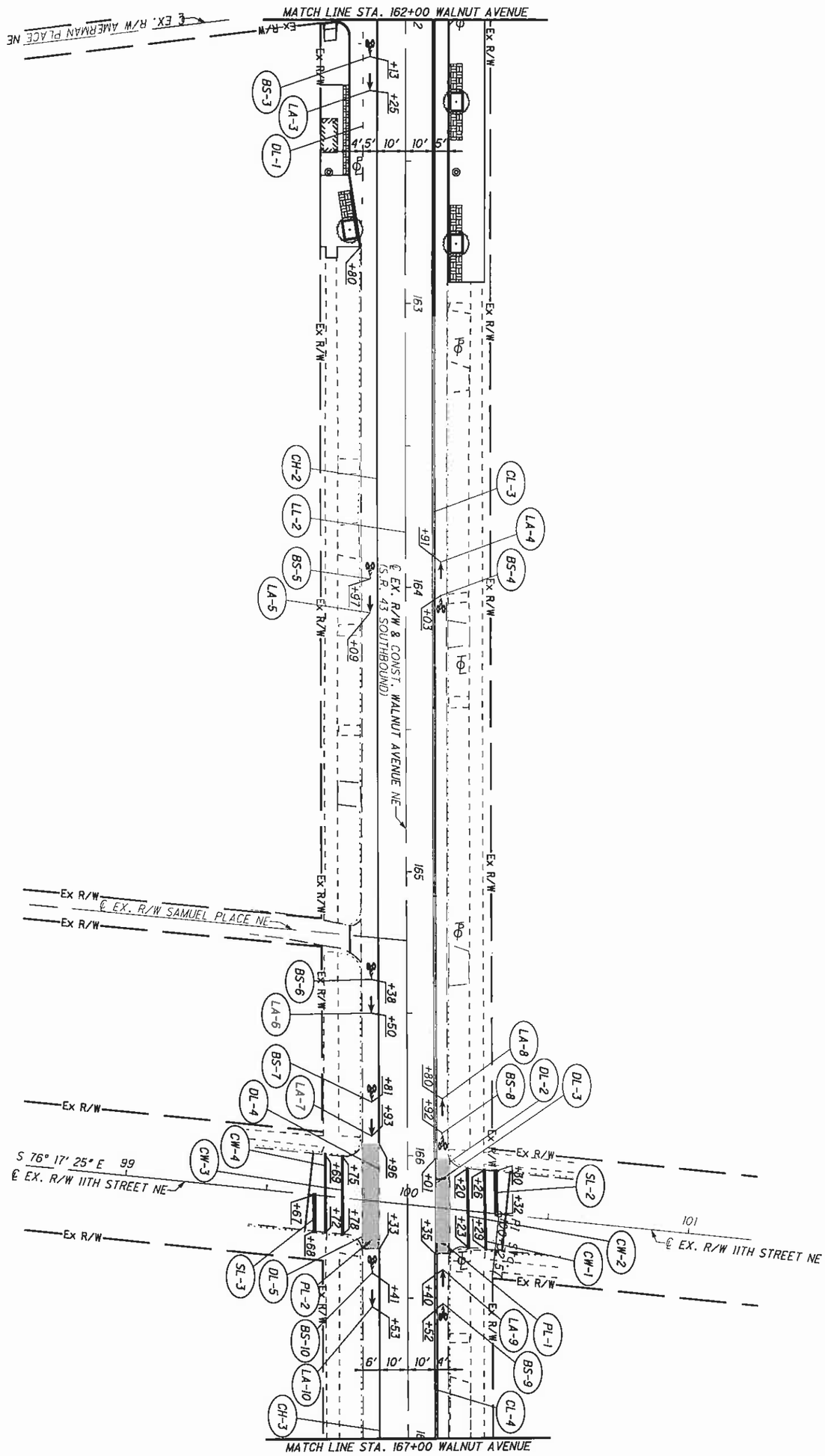

90 / 135	WALNUT & CHERRY COMPLETE STREET BIKE LANES	PAVEMENT MARKING PLAN - WALNUT AVENUE STA. 162+00 TO STA. 167+00	CALCULATED JMK / CHECKED WLC	0 10 20 40 HORIZONTAL SCALE IN FEET

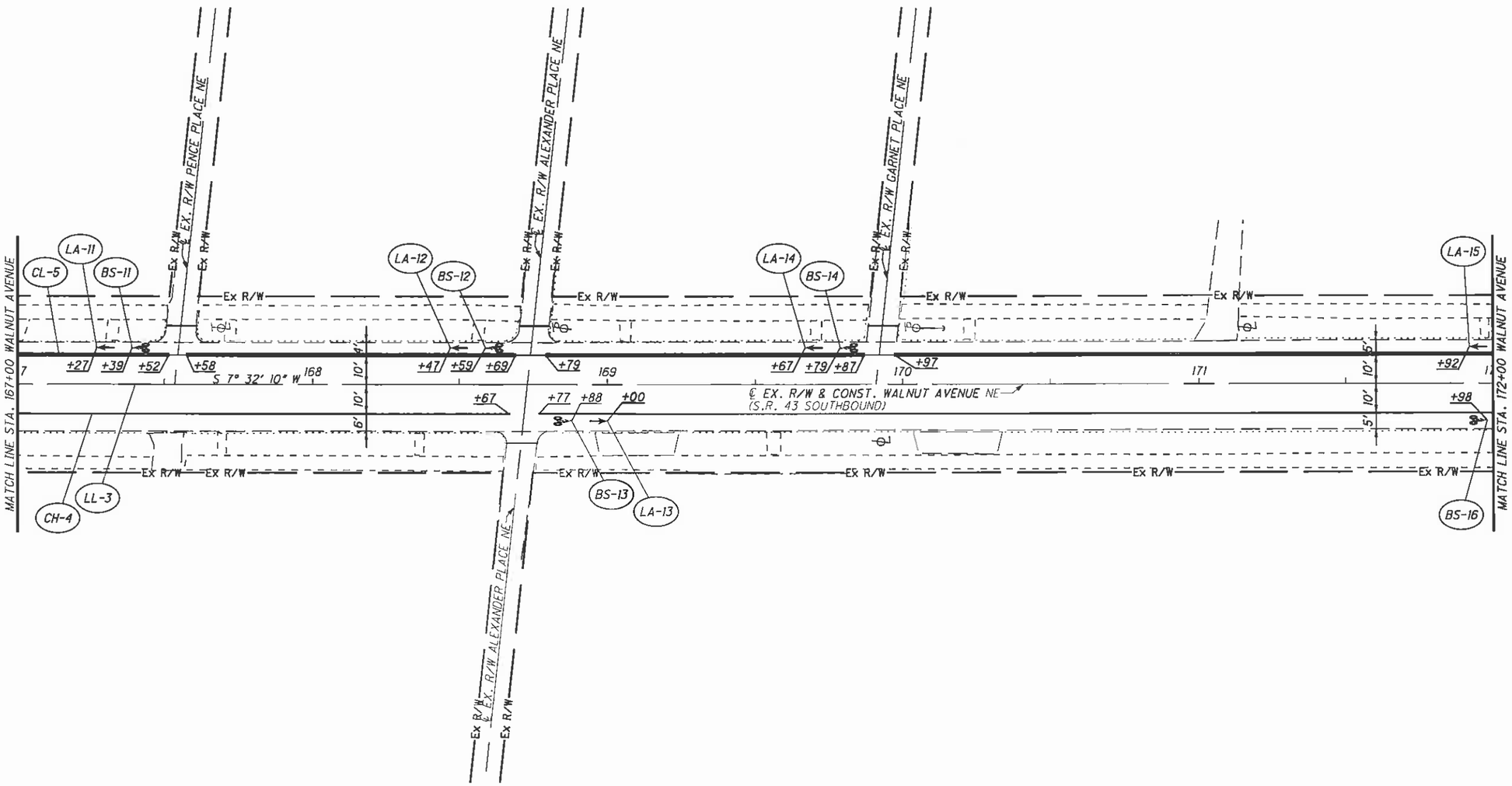

CROSS REFERENCE	
SHEET	DESCRIPTION
89	LEGEND
52-62	SIGNING QUANTITIES
63-77	MARKING QUANTITIES

CALCULATED JMK
CHECKED WLC

0 10 20 40
HORIZONTAL SCALE IN FEET

PAVEMENT MARKING PLAN - WALNUT AVENUE
STA. 167+00 TO STA. 172+00

WALNUT & CHERRY COMPLETE STREET BIKE LANES

R:\Stark\SARTA\Task 3 Canton\STA\91592\traffic\sheets\91592TP003A.dgn 6/28/2012 8:42:04 AM jrath

R:\Stark\SARTA\Task 3 Canton\STA\91592\traffic\sheets\91592TP004A.dgn 6/28/2012 8:43:20 AM jroth

CROSS REFERENCE	
SHEET	DESCRIPTION
89	LEGEND
52-62	SIGNING QUANTITIES
63-77	MARKING QUANTITIES

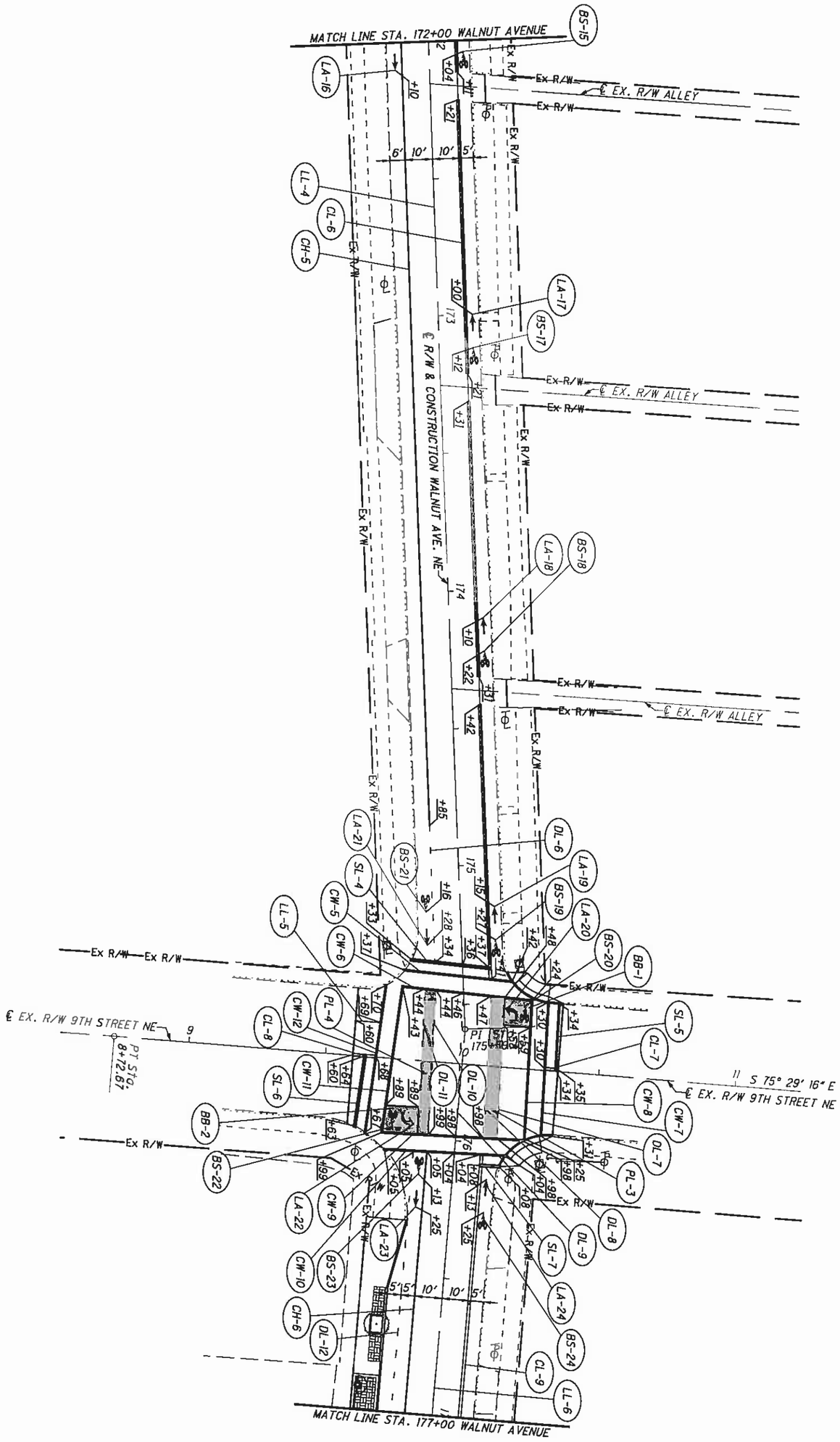

92 / 135	WALNUT & CHERRY COMPLETE STREET BIKE LANES	PAVEMENT MARKING PLAN - WALNUT AVENUE STA. 172+00 TO STA. 177+00	CALCULATED JMK / CHECKED WLC	0 10 20 40 HORIZONTAL SCALE IN FEET

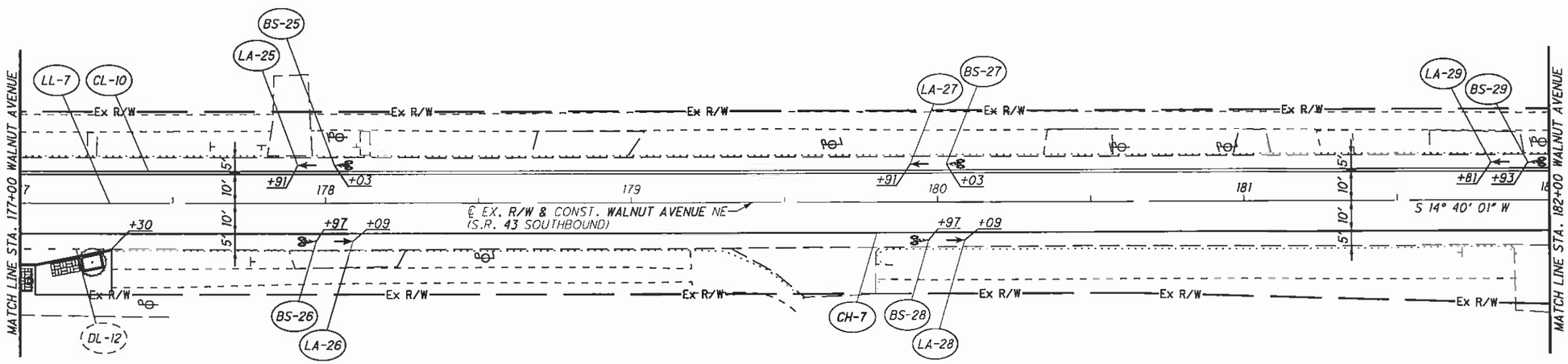

CROSS REFERENCE	
SHEET	DESCRIPTION
89	LEGEND
52-62	SIGNING QUANTITIES
63-77	MARKING QUANTITIES

HORIZONTAL SCALE IN FEET 0 10 20 40

CALCULATED JMK
CHECKED WLC

PAVEMENT MARKING PLAN - WALNUT AVENUE
STA. 177+00 TO STA. 182+00

WALNUT & CHERRY COMPLETE STREET BIKE LANES

R:\Stark\SARTA\Task 3 Canton\STA\91592\traffic\sheets\91592TP005A.dgn 6/28/2012 8:44:32 AM jroth

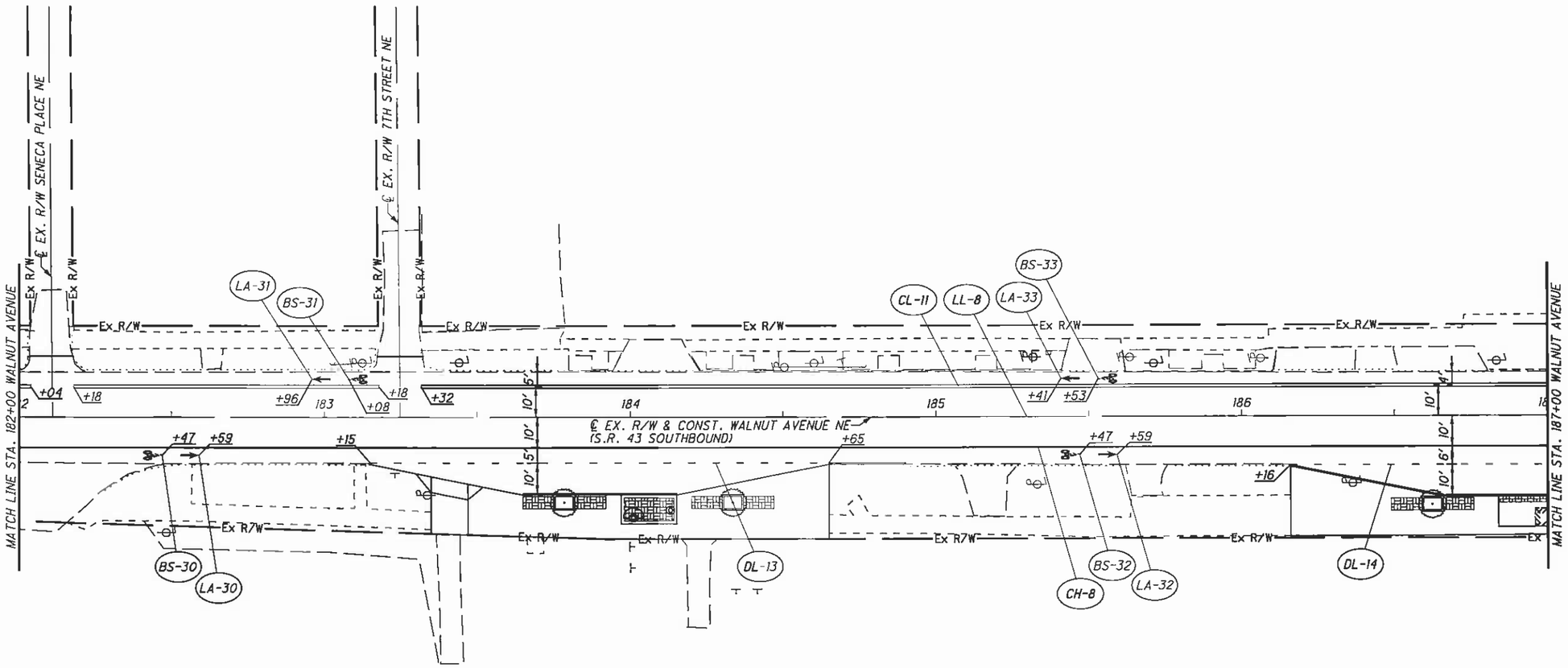

CROSS REFERENCE	
SHEET	DESCRIPTION
89	LEGEND
52-62	SIGNING QUANTITIES
63-77	MARKING QUANTITIES

HORIZONTAL SCALE IN FEET 0 10 20 40

CALCULATED JMK
CHECKED WLC

PAVEMENT MARKING PLAN - WALNUT AVENUE
STA. 182+00 TO STA. 187+00

WALNUT & CHERRY COMPLETE STREET BIKE LANES

R:\Stark\SARTA\Task 3 Canton\STA\91592\traffic\sheets\91592TP006A.dgn 6/28/2012 8:51:17 AM jroth

R:\Stark\SARTA\Task 3 Canton\STA\91592\traffic\sheets\91592TP007A.dgn 6/28/2012 8:52:31 AM jroth

CROSS REFERENCE	
SHEET	DESCRIPTION
89	LEGEND
52-62	SIGNING QUANTITIES
63-77	MARKING QUANTITIES

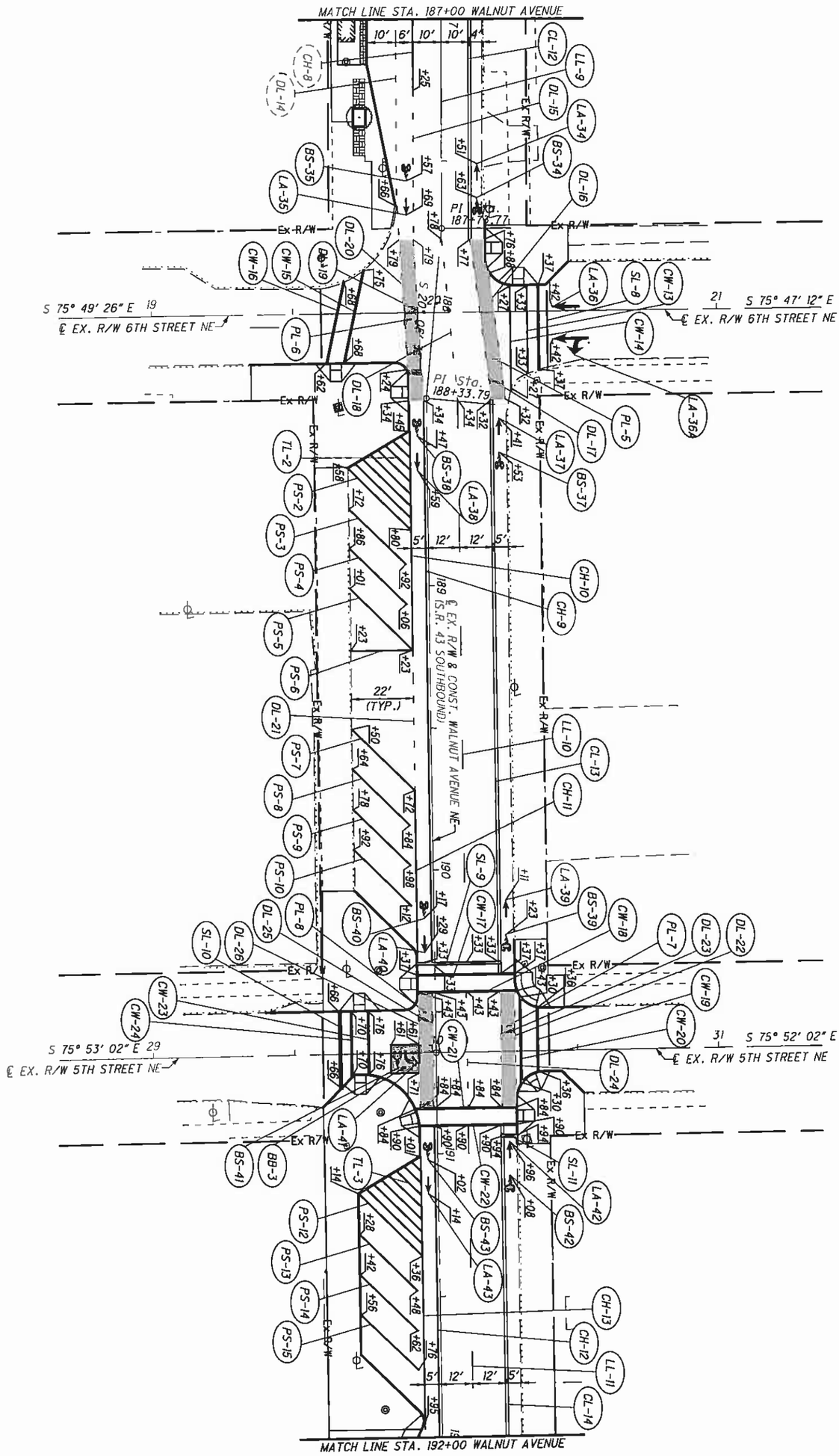

95/135

WALNUT & CHERRY COMPLETE STREET BIKE LANES

PAVEMENT MARKING PLAN - WALNUT AVENUE
STA. 187+00 TO STA. 192+00

CALCULATED JMK
CHECKED WLC

0 10 20 40
HORIZONTAL SCALE IN FEET

CROSS REFERENCE	
SHEET	DESCRIPTION
89	LEGEND
52-62	SIGNING QUANTITIES
63-77	MARKING QUANTITIES

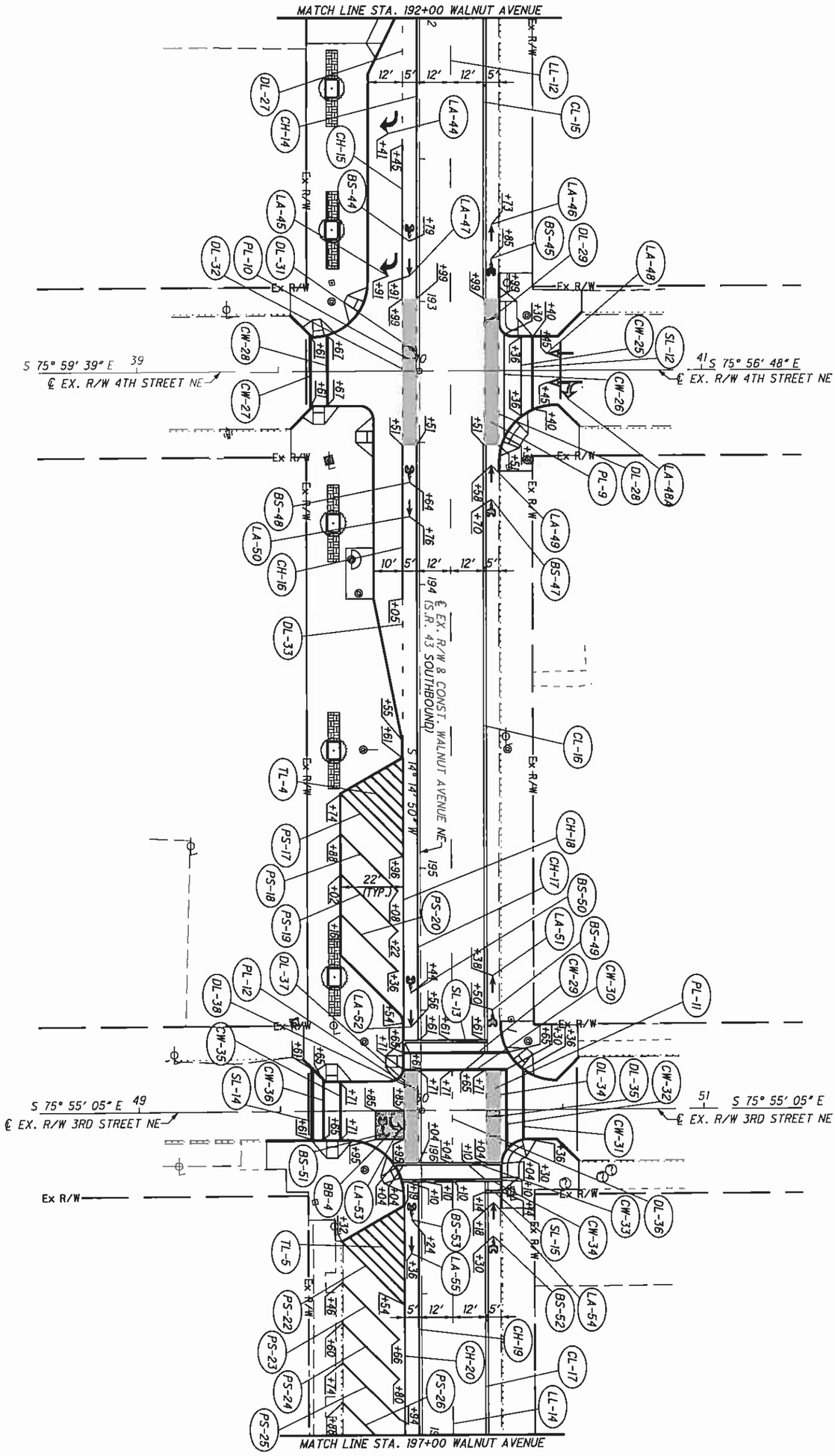

96/135	WALNUT & CHERRY COMPLETE STREET BIKE LANES	PAVEMENT MARKING PLAN - WALNUT AVENUE STA. 192+00 TO STA. 197+00	CALCULATED JMK / CHECKED WLC	HORIZONTAL SCALE IN FEET (0, 10, 20, 40)

CROSS REFERENCE	
SHEET	DESCRIPTION
89	LEGEND
52-62	SIGNING QUANTITIES
63-77	MARKING QUANTITIES

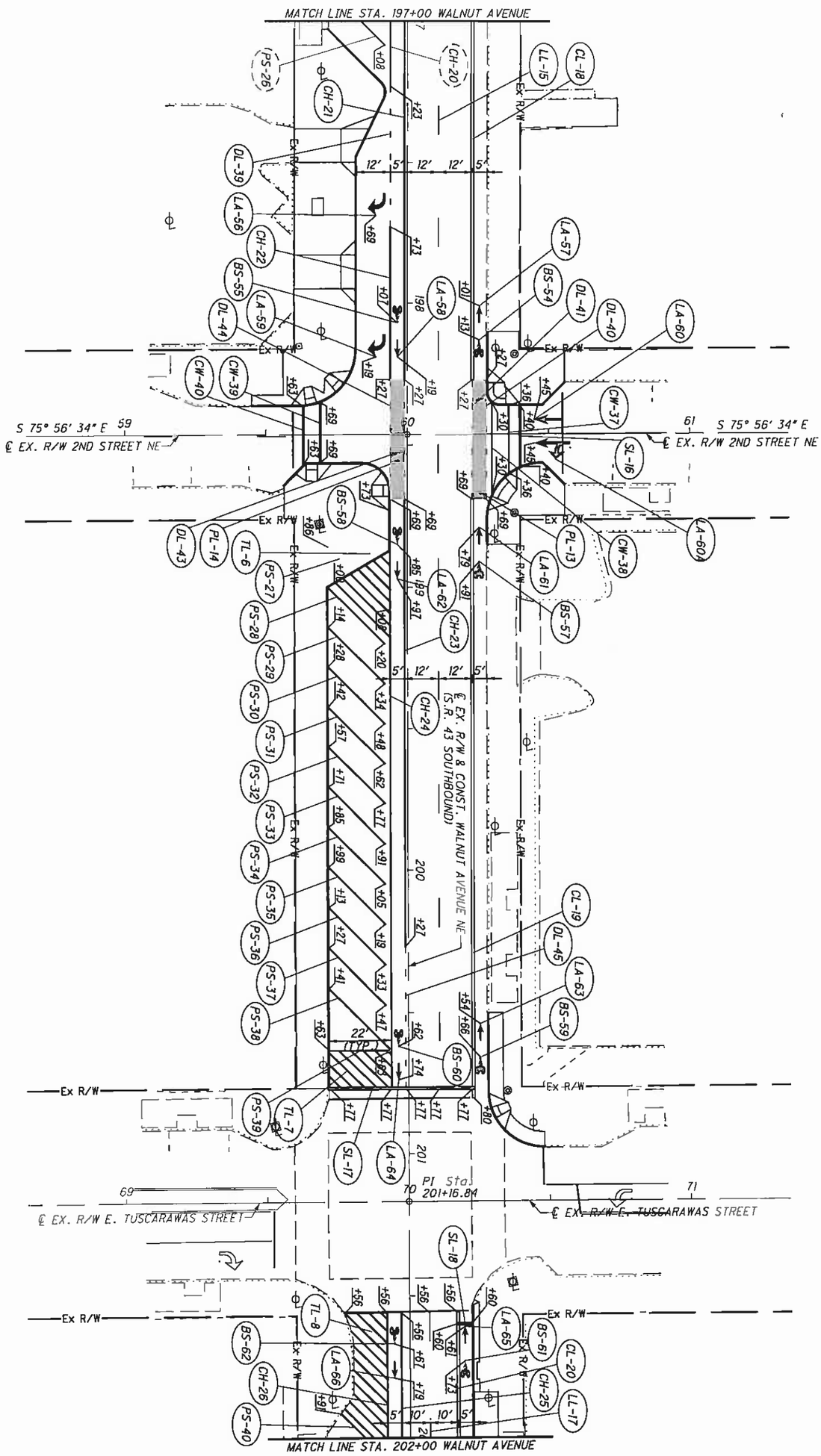

WALNUT & CHERRY COMPLETE STREET BIKE LANES

PAVEMENT MARKING PLAN - WALNUT AVENUE

STA. 197+00 TO STA. 202+00

CALCULATED JMK
CHECKED WLC

0 10 20 40
HORIZONTAL SCALE IN FEET

R:\Stark\SARTA\Task 3 Canton\STA\91592\traffic\sheets\91592TP010A.dgn 6/28/2012 8:56:25 AM jroth

CROSS REFERENCE	
SHEET	DESCRIPTION
89	LEGEND
52-62	SIGNING QUANTITIES
63-77	MARKING QUANTITIES

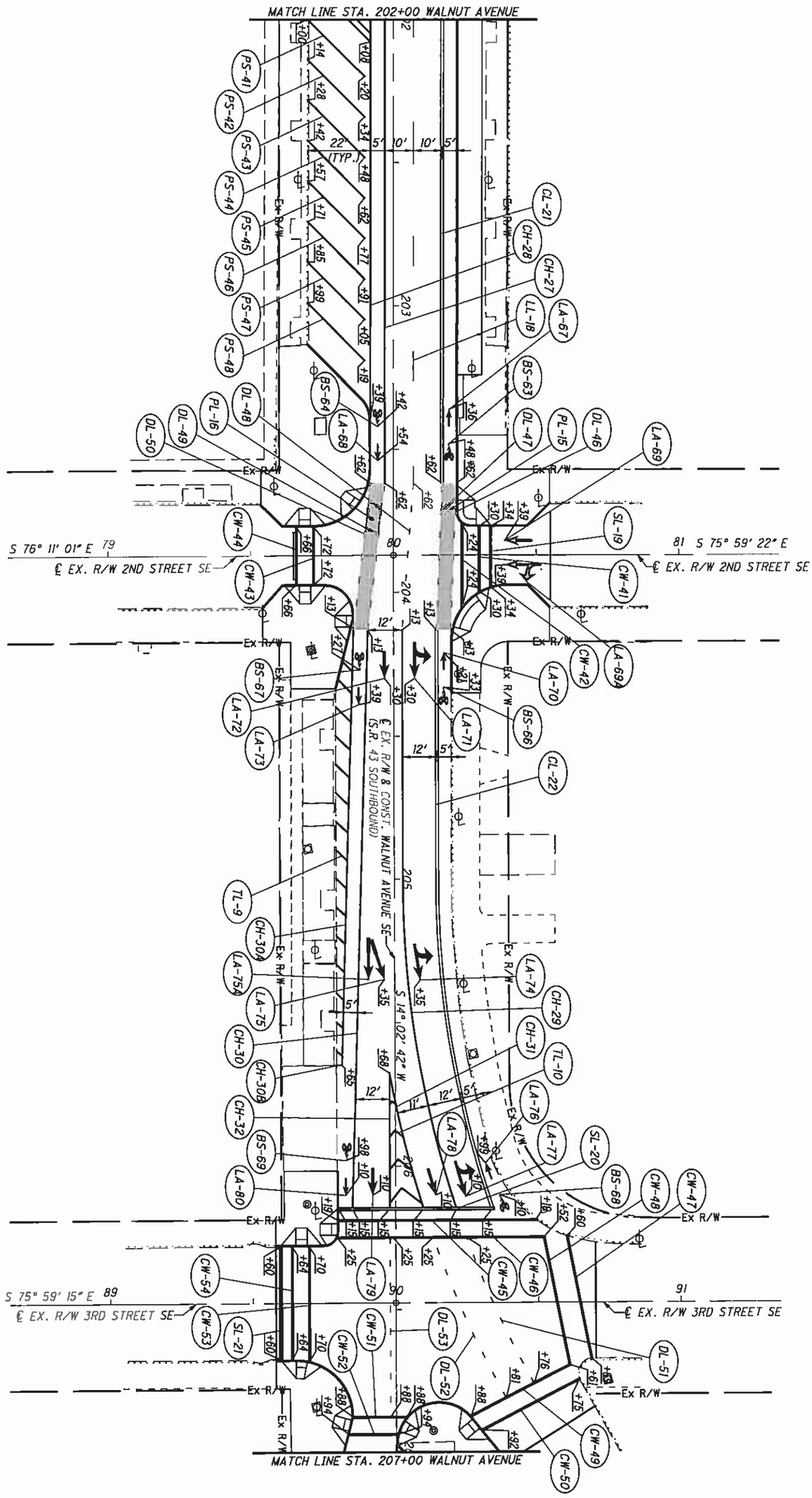

98
135

WALNUT & CHERRY COMPLETE STREET BIKE LANES

PAVEMENT MARKING PLAN - WALNUT AVENUE
STA. 202+00 TO STA. 207+00

CALCULATED JMK
CHECKED WLC

0 10 20 40
HORIZONTAL SCALE IN FEET

CROSS REFERENCE	
SHEET	DESCRIPTION
89	LEGEND
52-62	SIGNING QUANTITIES
63-77	MARKING QUANTITIES

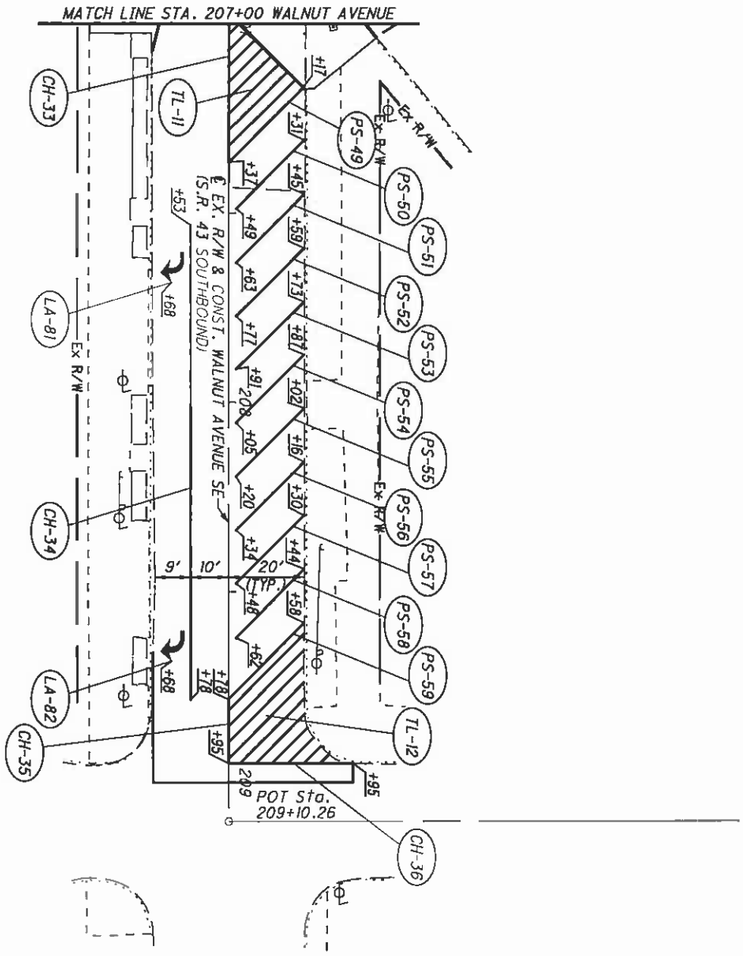

WALNUT & CHERRY COMPLETE STREET BIKE LANES

PAVEMENT MARKING PLAN - WALNUT AVENUE
STA. 207+00 TO STA. 212+00

CALCULATED JMK
CHECKED WLC

HORIZONTAL SCALE IN FEET
0 10 20 40

SHEET NO.	625 CONDUIT, 2", 725.04	625 TRENCH IN PAVED AREA, TYPE A	625 PULL BOX, 725.06, 18"	625 PLASTIC CAUTION TAPE	632 VEHICULAR SIGNAL HEAD, (LED), 3-SECTION, 12" LENS, 1-WAY, POLYCARBONATE, AS PER PLAN (FOR BICYCLES)	632 COVERING OF VEHICULAR SIGNAL HEAD	632 DETECTOR LOOP, AS PER PLAN	632 LOOP DETECTOR UNIT, DELAY AND EXTENSION TYPE, AS PER PLAN	632 SIGNAL CABLE, 7 CONDUCTOR, NO. 14 AWG (BY CONTRACTOR)	632 SIGNAL CABLE, 7 CONDUCTOR, NO. 14 AWG (BY AEP)	632 LOOP DETECTOR LEAD-IN CABLE, AS PER PLAN (BY CONTRACTOR)	632 LOOP DETECTOR LEAD-IN CABLE, AS PER PLAN (BY AEP)	632 REMOVAL OF MISCELLANEOUS TRAFFIC SIGNAL ITEM - PEDESTAL	632 REMOVAL OF TRAFFIC SIGNAL INSTALLATION FOR STORAGE, AS PER PLAN	632 REUSE OF VEHICULAR SIGNAL HEAD, AS PER PLAN	632 REUSE OF PEDESTRIAN SIGNAL HEAD, AS PER PLAN
	FT	FT	EACH	FT	EACH	EACH	EACH	EACH	FT	FT	FT	FT	EACH	EACH	EACH	EACH
101					2	2			250						2	
103			1											1		
104	34	34	2	34	2	2	2	2	267	459	10	290	2		2	6
106			2											1		
107	43	43	2	43	2	2			223	444			2		2	6
109			1											1		
110	14	14		14	2	2	2	2	1037		541				2	2
112			2											1		
113	21	21	1	21	1	1	3	3	145	277	15	402	1			4
TOTALS CARRIED TO GENERAL SUMMARY	112	112	11	112	9	9	7	7	1922	1180	566	692	5	4	8	18

CALCULATED JMK
CHECKED WLC

TRAFFIC SIGNAL SUBSUMMARY

WALNUT & CHERRY
COMPLETE STREET
BIKE LANES

100
135

R:\Stark\SARTA\Task 3 Canton\STA\91592\signals\sheets\91592CS001.dgn 8/28/2012 2:53:44 PM bill

4 5
EXISTING VEHICULAR SIGNAL HEAD TO BE RELOCATED

1 2 6 7
EXISTING VEHICULAR SIGNAL HEAD TO REMAIN IN PLACE

3 8
PROPOSED BICYCLE SIGNAL HEAD 12", LED, POLYCARBONATE

A B C D
E F G H
EXISTING PEDESTRIAN SIGNAL HEAD TO REMAIN IN PLACE

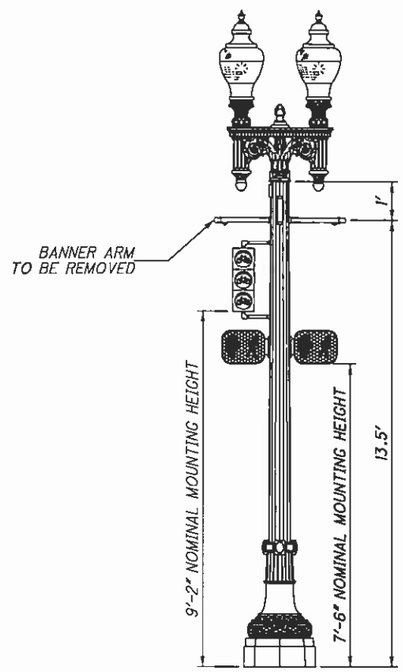

BICYCLE SIGNAL MOUNTING DETAIL
NOT TO SCALE

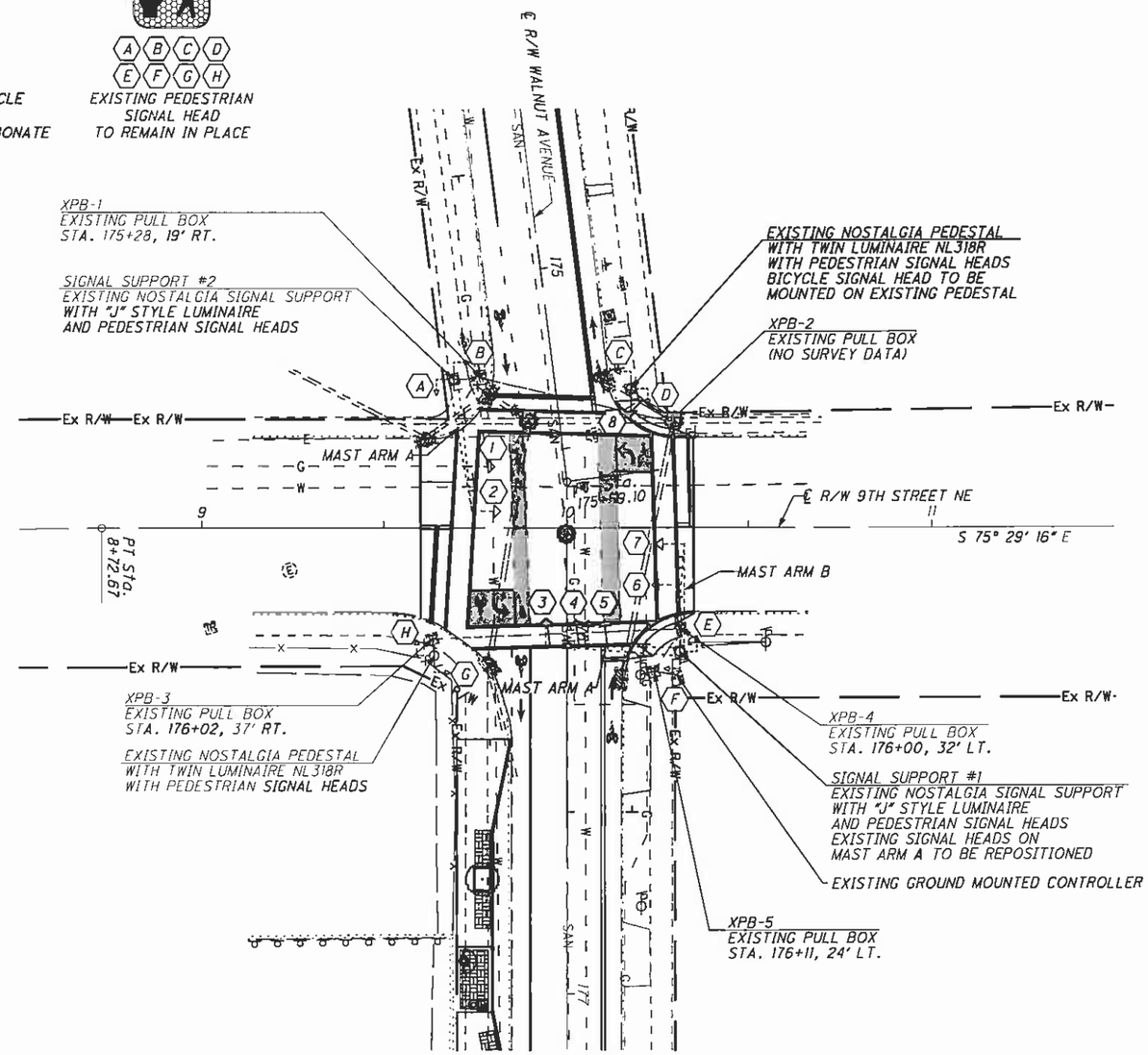

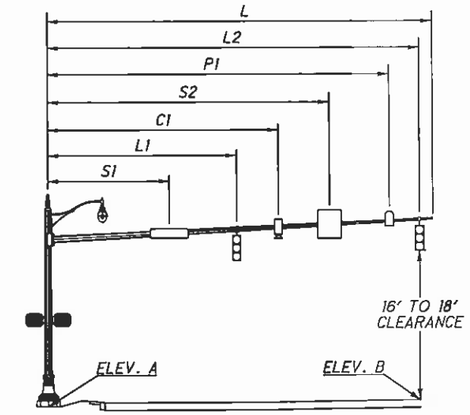

HORIZONTAL SCALE IN FEET 0 10 20 40

CALCULATED JMK
CHECKED WLC

NOTES

1.) SIGNAL HEAD CONDUIT BRACKETS AND CONDUIT FITTINGS SHALL BE GALVANIZED AND PAINTED (EXCEPT POLE CLAMPS OR BANDS) TO MATCH THE BODY OF THE SIGNAL HEAD.

2.) THE SIGNAL HEAD BRACKET ARMS SHALL BE ATTACHED TO STEEL POLES BY ONE OF THE FOLLOWING METHODS:

A.) 1-1/2 INCHES (38 MILLIMETER) BLIND HALF COUPLING WELDED INTO THE POLE PRIOR TO GALVANIZING.
B.) BRACKET ARM HUB PLATES ATTACHED TO THE POLE AS PER NOTE 3.
C.) POLE CLAMP WITH THREADED HUB.

FIELD INSTALLATION OF THE WIRING HOLES FOR SIGNAL HEADS WILL BE PERMITTED PROVIDED THAT THE HOLES ARE DRILLED OR HOLE SAWN. NO TORCH CUTTING OR FIELD WELDING WILL BE PERMITTED. CUT SURFACES SHALL BE FILED SMOOTH AND COVERED WITH TWO COATS OF ZINC RICH PAINT. GROMMETS OR WIRING GUIDES SHALL BE INSTALLED IN THE HOLES.

3.) THE FOLLOWING MINIMUM SIZE FASTENERS SHALL BE USED FOR THE ATTACHMENT OF THE INDICTED HARDWARE TO STEEL POLES:

A.) CONDUIT BRACKET ARM HUB PLATES: 1/2 INCH (13 MILLIMETER) DIA. SCREW OF 3/4 INCH (19 MILLIMETER) WIDE PASSIVATED STAINLESS STEEL BAND (TWO FASTENERS OR BANDS PER HUB PLATE).
B.) CONDUIT: TWO HOLE CONDUIT STRAPS WITH 1/4 INCH (6.4 MILLIMETER) DIA. SCREWS OR 3/4 INCH (19 MILLIMETER) WIDE PASSIVATED STAINLESS STEEL BANDS.

THE SCREWS SHALL UTILIZE A DRILLED AND TAPPED HOLE OR BE THE SELF-TAPPING TYPE.

4.) ALL CONNECTIONS SHALL BE OF THE TRI-STUD DESIGN.

SUPPORT NO.	MAST ARM	L (FT.)	L1 (FT.)	L2 (FT.)	L3 (FT.)	P1 (FT.)	P2 (FT.)	C1 (FT.)	S1 (FT.)	S2 (FT.)	S3 (FT.)	S4 (FT.)	ELEVATION A	ELEVATION B	LOCATION	STATION	OFFSET
1	A	38	20	28	36				10	16	31		1067.26	1067.09	WALNUT	176+06	31' LT.
	B	34	19	31		33			8	15	23	26		1066.44			
2	A	38	23	35		37	ON SP-2		10	28	31		1067.43	1066.98	WALNUT	175+27	27' RT.

TRAFFIC SIGNAL PLAN
9TH STREET NE AND WALNUT AVENUE

WALNUT & CHERRY COMPLETE STREET BIKE LANES

R:\Stark\SARTA\Task 3 Canton\STA\91592\signals\sheets\91592CP001.dgn 6/28/2012 8:26:42 AM jroth

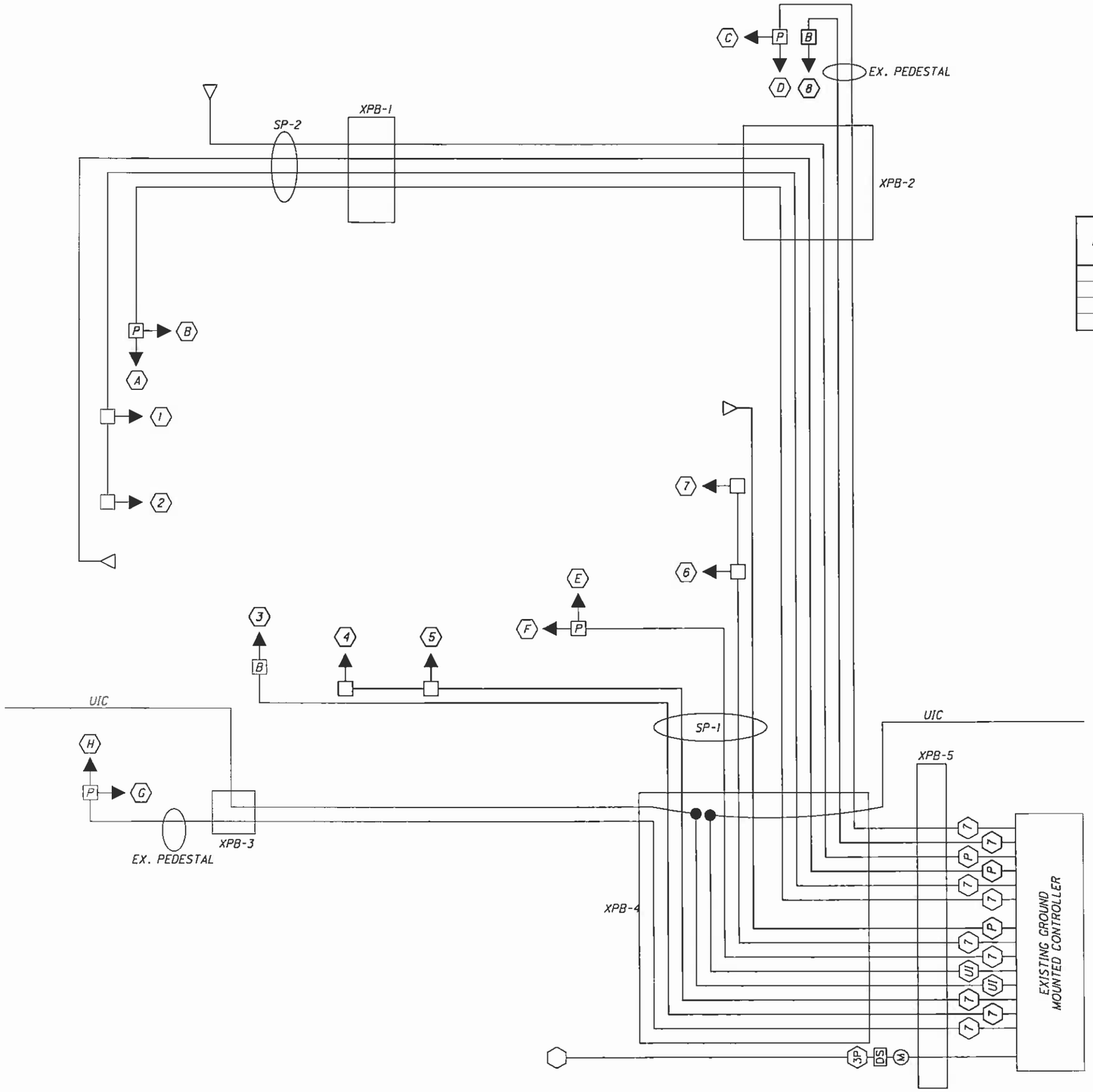

INTERVAL OR FEATURE		CONTROLLER MOVEMENT NO.							
INTERSECTION MOVEMENT		1	2	3	4	5	6	7	8
MINIMUM GREEN (INITIAL)	(SEC.)		5		10				10
MAXIMUM GREEN 1	(SEC.)		25		15				15
MAXIMUM GREEN 2	(SEC.)		35		10				10
EXTENSION	(SEC.)		4		4				4
YELLOW CHANGE	(SEC.)		3.1		3.1				3.1
ALL RED CLEARANCE	(SEC.)		2		2				2
WALK	(SEC.)		7		5				5
PEDESTRIAN CLEARANCE	(SEC.)		11		10				10
MAXIMUM RECALL	(ON/OFF)		ON		ON				ON
MINIMUM RECALL	(ON/OFF)								
PEDESTRIAN RECALL	(ON/OFF)		ON		ON				ON

*BICYCLE SIGNALS SHALL FOLLOW PEDESTRIAN SIGNAL PHASING AND TIMING

PATTERN NUMBER	CYCLE LENGTH (SEC.)	PERCENT SPLIT BY PHASE								OFFSET (SEC.)
		1	2	3	4	5	6	7	8	
PATTERN #1	80		48		52				52	39
PATTERN #2	90		52		48				48	58
PATTERN #3	90		65		35				35	47
PATTERN #4	90		65		35				35	68

TIME INTERVAL	PATTERN NUMBER
6:00 AM TO 7:00 AM	#1
7:00 AM TO 9:00 AM	#2
9:00 AM TO 11:00 AM	#1
11:00 AM TO 4:00 PM	#3
4:00 PM TO 6:00 PM	#4
6:00 PM TO 9:00 PM	#3
9:00 PM TO 11:00 PM	#1
11:00 PM TO 6:00 AM	FREE

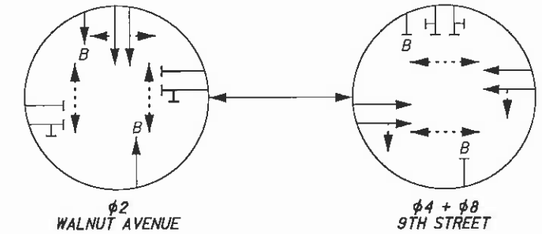

PREEMPT NOTES:
1. CHANNEL 1 SHALL PREEMPT TO SOUTHBOUND GREEN
2. CHANNEL 3 SHALL PREEMPT TO WESTBOUND GREEN
3. CHANNEL 4 SHALL PREEMPT TO EASTBOUND GREEN

LEGEND

- (2) LOOP DETECTOR LEAD-IN CABLE
- (7) SIGNAL CABLE, 7/C, #14 AWG
- (P) EMERGENCY PREEMPTION CABLES
- (V) VIDEO DETECTION CABLES
- (3P) POWER CABLE, 3/C, #10 AWG, 600V
- (UI) INTERCONNECT CABLE, 6 PAIR, #19 AWG, SOLID, REA (PE-39)
- PB PULL BOX
- V VENT
- LP LIGHT POLE
- PP PEDESTRIAN POLE
- SP SIGNAL POLE
- UIC UNDERGROUND INTERCONNECT CABLE
- EMH AMERICAN ELECTRIC POWER MANHOLE
- DS DISCONNECT SWITCH
- (M) ELECTRIC METER
- VEHICULAR SIGNAL HEAD
- (B) BICYCLE SIGNAL HEAD
- (P) PEDESTRIAN SIGNAL HEAD
- PEDESTRIAN PUSHBUTTON
- VIDEO DETECTION UNIT
- EMERGENCY PREEMPTION UNIT
- POLE
- LUMINAIRE
- SPLICE LOCATION
- EXISTING TO REMAIN
- PROPOSED/TO BE RELOCATED

HORIZONTAL SCALE IN FEET 0 10 20 40

CALCULATED JMK
CHECKED WLC

TRAFFIC SIGNAL DETAILS
9TH STREET NE AND WALNUT AVENUE

WALNUT & CHERRY STREET COMPLETE BIKE LANES

R:\Stark\SARTA\Task 3 Canton\STA\91592\signals\sheets\91592CP002.dgn 6/28/2012 8:27:04 AM jroth

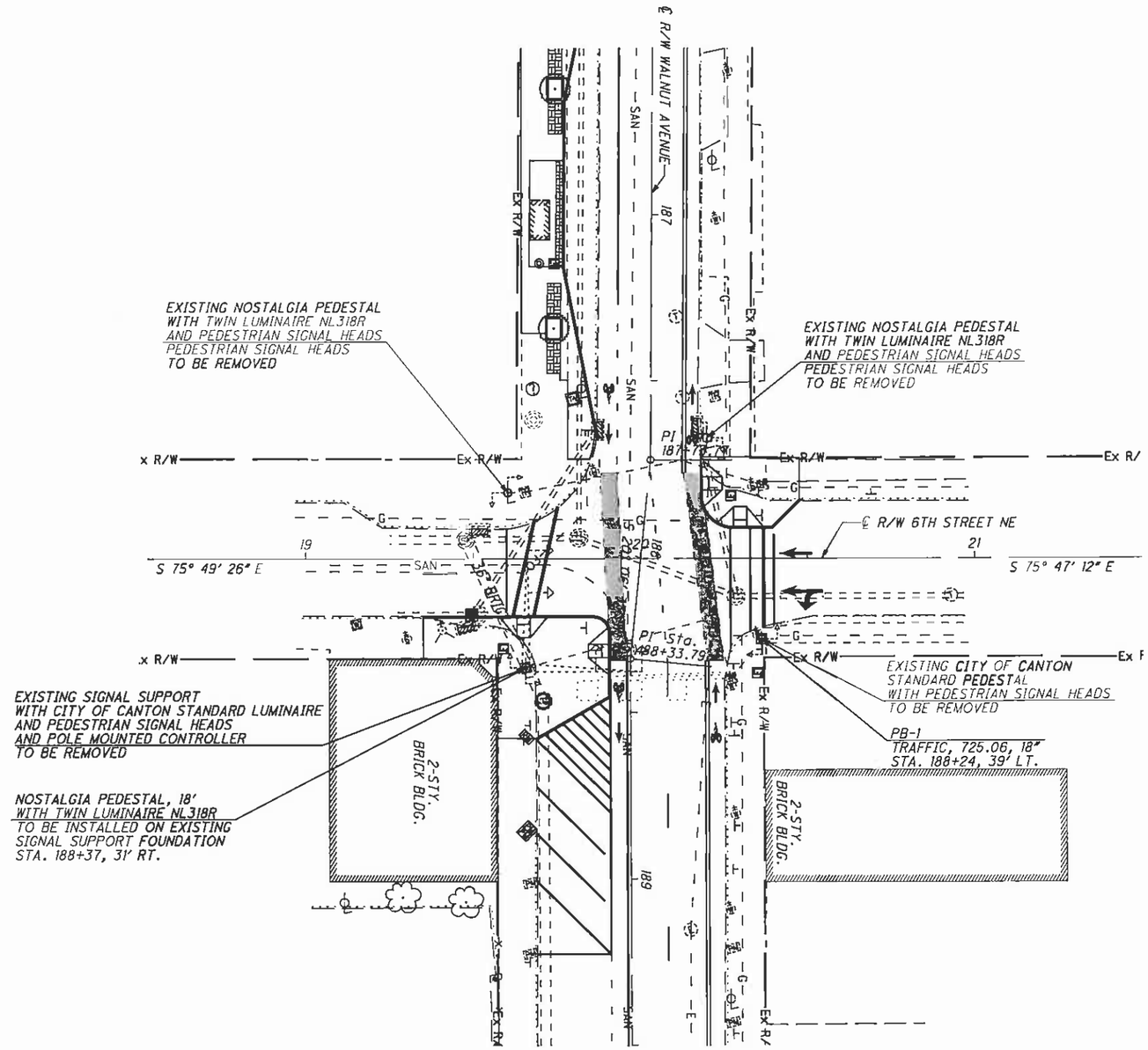

HORIZONTAL SCALE IN FEET 0 10 20 40

CALCULATED JMK
CHECKED WLC

TRAFFIC SIGNAL PLAN
6TH STREET NE AND WALNUT AVENUE

WALNUT & CHERRY COMPLETE STREET BIKE LANES

R:\Stark\SARTA\Task 3 Canton\STA\91592\signals\sheets\91592CP003.dgn 6/28/2012 8:28:29 AM jroth

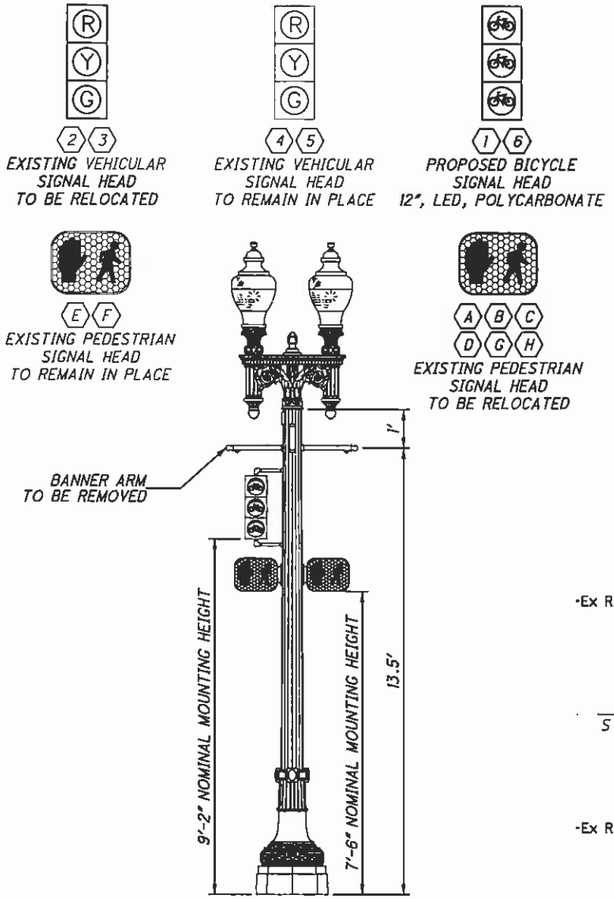

BICYCLE SIGNAL MOUNTING DETAIL

NOT TO SCALE

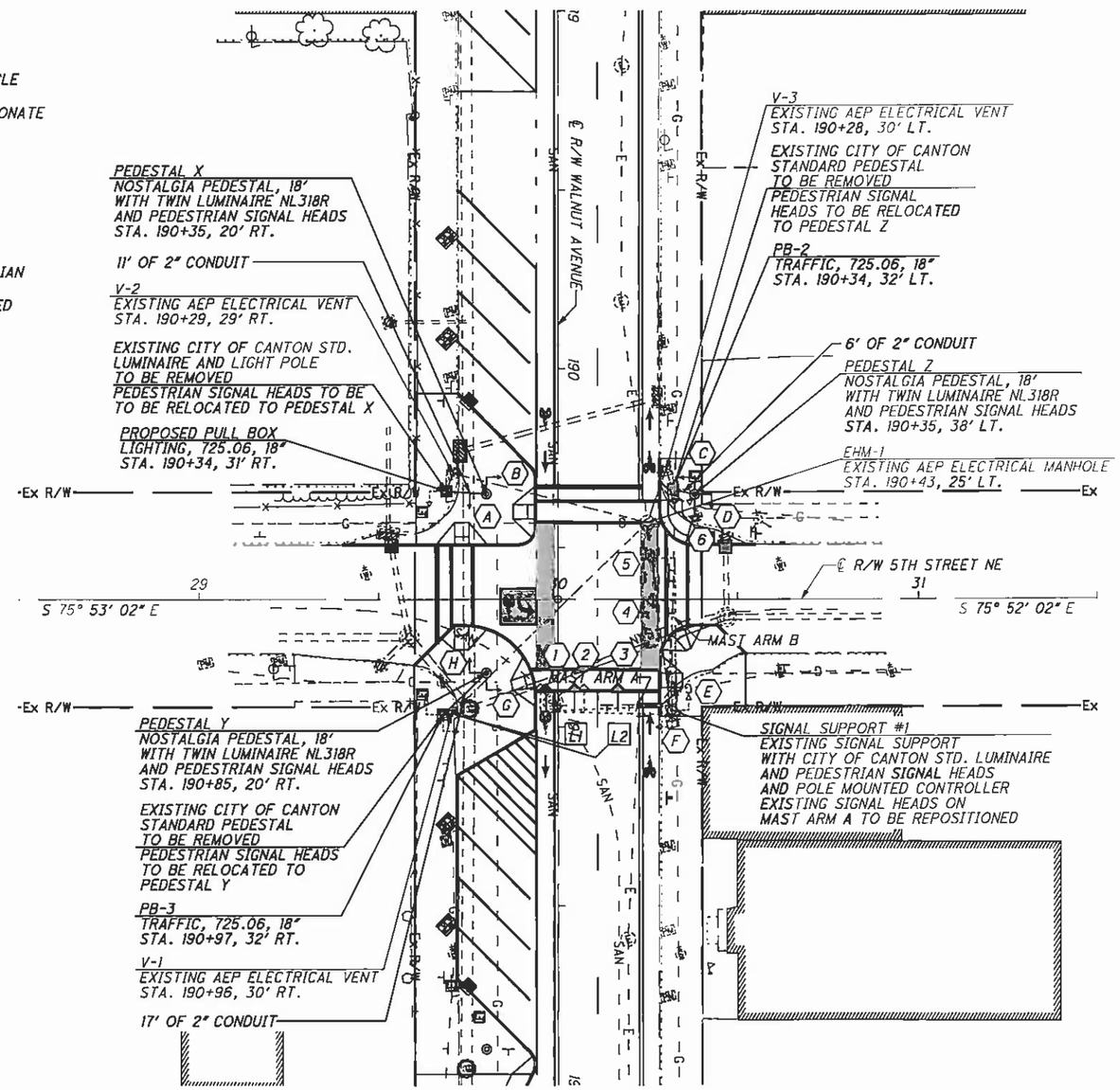

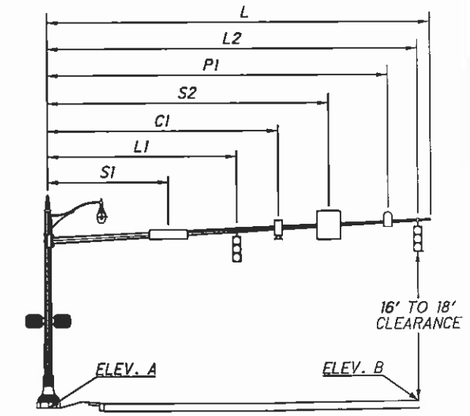

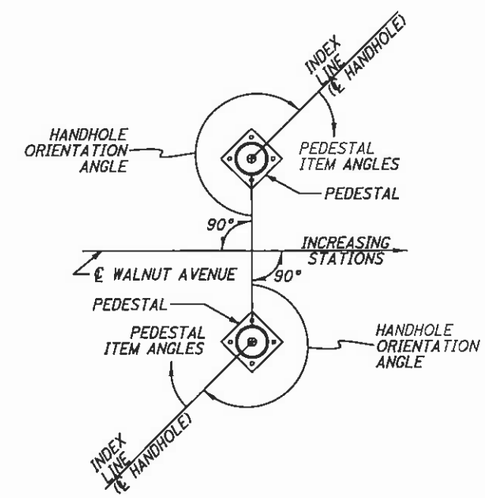

NOTES

1.) SIGNAL HEAD CONDUIT BRACKETS AND CONDUIT FITTINGS SHALL BE GALVANIZED AND PAINTED (EXCEPT POLE CLAMPS OR BANDS) TO MATCH THE BODY OF THE SIGNAL HEAD.

2.) THE SIGNAL HEAD BRACKET ARMS SHALL BE ATTACHED TO STEEL POLES BY ONE OF THE FOLLOWING METHODS:

A.) 1-1/2 INCHES (38 MILLIMETER) BLIND HALF COUPLING WELDED INTO THE POLE PRIOR TO GALVANIZING.
B.) BRACKET ARM HUB PLATES ATTACHED TO THE POLE AS PER NOTE 3.
C.) POLE CLAMP WITH THREADED HUB.

FIELD INSTALLATION OF THE WIRING HOLES FOR SIGNAL HEADS WILL BE PERMITTED PROVIDED THAT THE HOLES ARE DRILLED OR HOLE SAWN. NO TORCH CUTTING OR FIELD WELDING WILL BE PERMITTED. CUT SURFACES SHALL BE FILED SMOOTH AND COVERED WITH TWO COATS OF ZINC RICH PAINT. GROMMETS OR WIRING GUIDES SHALL BE INSTALLED IN THE HOLES.

3.) THE FOLLOWING MINIMUM SIZE FASTENERS SHALL BE USED FOR THE ATTACHMENT OF THE INDICTED HARDWARE TO STEEL POLES:

A.) CONDUIT BRACKET ARM HUB PLATES: 1/2 INCH (13 MILLIMETER) DIA. SCREW OF 3/4 INCH (19 MILLIMETER) WIDE PASSIVATED STAINLESS STEEL BAND (TWO FASTENERS OR BANDS PER HUB PLATE).
B.) CONDUIT: TWO HOLE CONDUIT STRAPS WITH 1/4 INCH (6.4 MILLIMETER) DIA. SCREWS OR 3/4 INCH (19 MILLIMETER) WIDE PASSIVATED STAINLESS STEEL BANDS.

THE SCREWS SHALL UTILIZE A DRILLED AND TAPPED HOLE OR BE THE SELF-TAPPING TYPE.

4.) ALL CONNECTIONS SHALL BE OF THE TRI-STUD DESIGN.

PEDESTAL CHART

PEDESTAL NO.	HANDHOLE ANGLE (DEG.)	ORIENTATION ANGLES (DEG.) FROM HANDHOLE		
		PEDESTRIAN SIGNAL	PEDESTRIAN SIGNAL	BICYCLE SIGNAL
X	180	HEAD A 0	HEAD B 90	
Y	180	HEAD G 270	HEAD H 0	
Z	180	HEAD C 270	HEAD D 0	HEAD 6 90

SUPPORT NO.	MAST ARM	L (FT.)	L1 (FT.)	L2 (FT.)	L3 (FT.)	P1 (FT.)	C1 (FT.)	S1 (FT.)	S2 (FT.)	S3 (FT.)	S4 (FT.)	ELEVATION A	ELEVATION B	LOCATION	STATION	OFFSET
1	A	37	15	27	35	24		8	12	18	31	1039.24	1039.93	WALNUT	190+95	32' LT.
	B	43	31	42		33		10	27	36	39		1039.65			

HORIZONTAL SCALE IN FEET 0 10 20 40

CALCULATED JMK
CHECKED WLC

TRAFFIC SIGNAL PLAN
5TH STREET NE AND WALNUT AVENUE

WALNUT & CHERRY COMPLETE STREET BIKE LANES

R:\Stark\SARTA\Task 3 Canton\STA\91592\signals\sheets\91592CP004.dgn 6/28/2012 8:29:00 AM jroth

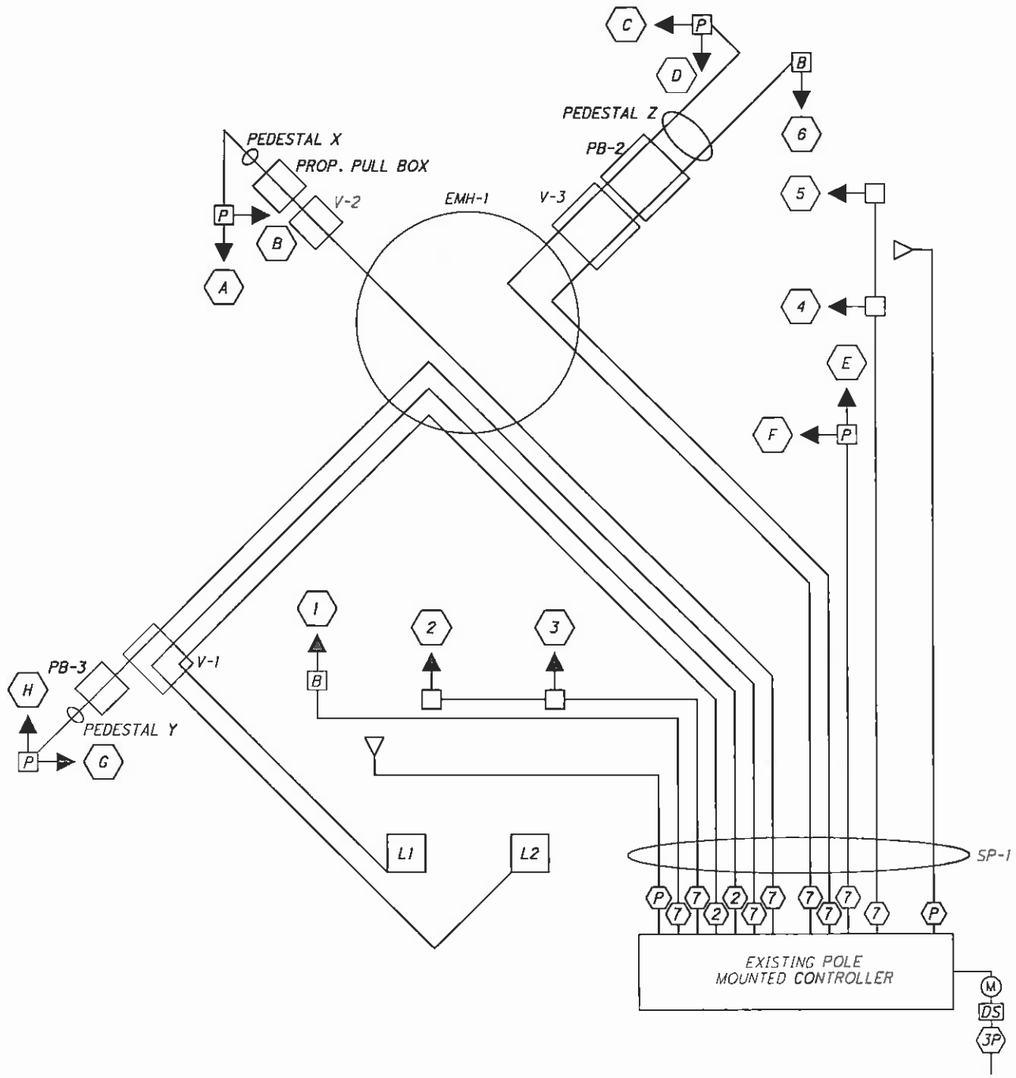

INTERVAL OR FEATURE		CONTROLLER MOVEMENT NO.							
INTERSECTION MOVEMENT		1	2	3	4	5	6	7	8
MINIMUM GREEN (INITIAL)	(SEC.)		5		5				
MAXIMUM GREEN 1	(SEC.)		60		30				
MAXIMUM GREEN 2	(SEC.)		60		30				
EXTENSION	(SEC.)								
YELLOW CHANGE	(SEC.)		3		3				
ALL RED CLEARANCE	(SEC.)		1.5		1.5				
WALK	(SEC.)		7		7				
PEDESTRIAN CLEARANCE	(SEC.)		10		10				
MAXIMUM RECALL	(ON/OFF)		ON		ON				
MINIMUM RECALL	(ON/OFF)								
PEDESTRIAN RECALL	(ON/OFF)		ON		ON				

*BICYCLE SIGNALS SHALL FOLLOW PEDESTRIAN SIGNAL PHASING AND TIMING

LOOP NO.	SIZE	NO. OF TURNS	TYPE	DELAY OR EXTENSION (SEC.)	DETECTOR UNIT NO.	PHASE	REMARKS
L1	6' X 6'	4	PULSE	-	1	-	SYSTEM LOOP
L2	6' X 6'	4	PULSE	-	2	-	SYSTEM LOOP

PATTERN NUMBER	CYCLE LENGTH (SEC.)	PERCENT SPLIT BY PHASE								OFFSET (SEC.)
		1	2	3	4	5	6	7	8	
PATTERN #1	75		60		40					89
PATTERN #2	80		60		40					70

TIME INTERVAL	PATTERN NUMBER
ALL DAY	#1

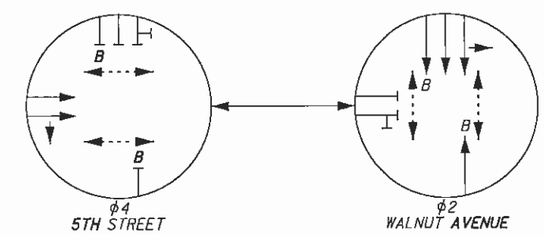

PREEMPT NOTES:
1. CHANNEL 1 SHALL PREEMPT TO SOUTHBOUND GREEN
2. CHANNEL 4 SHALL PREEMPT TO EASTBOUND GREEN

LEGEND

- 2 LOOP DETECTOR LEAD-IN CABLE
- 7 SIGNAL CABLE, 7/C, #14 AWG
- P EMERGENCY PREEMPTION CABLES
- V VIDEO DETECTION CABLES
- 3P POWER CABLE, 3/C, #10 AWG, 600V
- UI INTERCONNECT CABLE, 6 PAIR, #19 AWG, SOLID, REA (PE-39)
- PB PULL BOX
- V VENT
- LP LIGHT POLE
- PP PEDESTRIAN POLE
- SP SIGNAL POLE
- UIC UNDERGROUND INTERCONNECT CABLE
- EMH AMERICAN ELECTRIC POWER MANHOLE
- DS DISCONNECT SWITCH
- M ELECTRIC METER
- VEHICULAR SIGNAL HEAD
- B BICYCLE SIGNAL HEAD
- P PEDESTRIAN SIGNAL HEAD
- PEDESTRIAN PUSHBUTTON
- VIDEO DETECTION UNIT
- EMERGENCY PREEMPTION UNIT
- POLE
- LUMINAIRE
- SPLICE LOCATION
- EXISTING TO REMAIN
- PROPOSED/TO BE RELOCATED

HORIZONTAL SCALE IN FEET 0 10 20 40

CALCULATED JMK
CHECKED WLC

TRAFFIC SIGNAL DETAILS
5TH STREET NE AND WALNUT AVENUE

WALNUT & CHERRY COMPLETE STREET BIKE LANES

R:\Stark\SARTA\Task 3 Canton\STA\91592\signals\sheets\91592CP005.dgn 6/28/2012 8:30:02 AM jroth

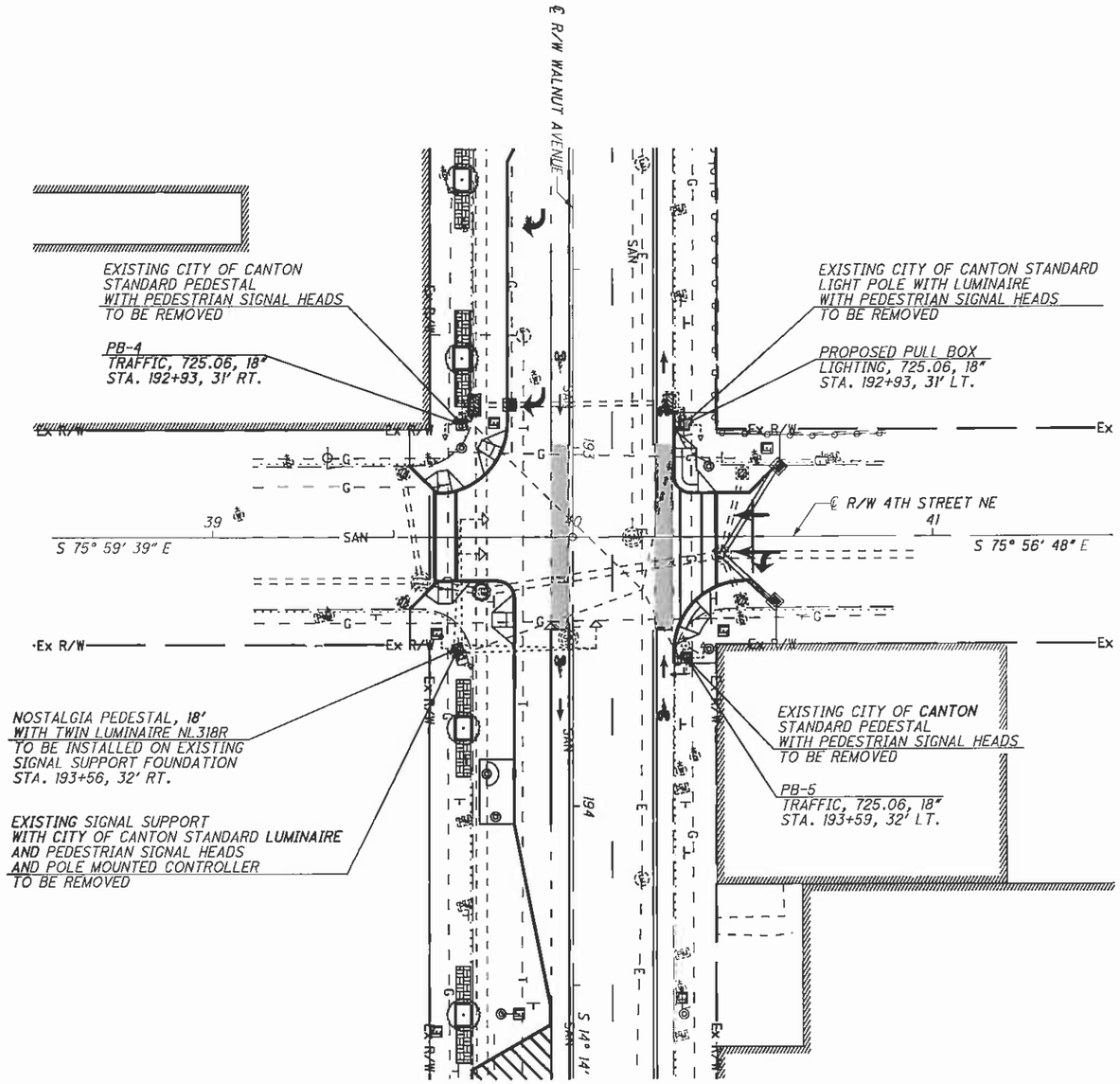

HORIZONTAL SCALE IN FEET
0 10 20 40

CALCULATED JMK
CHECKED WLC

TRAFFIC SIGNAL PLAN
4TH STREET NE AND WALNUT AVENUE

WALNUT & CHERRY
COMPLETE STREET
BIKE LANES

R:\Stark\SARTA\Task 3 Canton\STA\91592\signals\sheets\91592CP006.dgn 6/28/2012 8:30:32 AM jroth

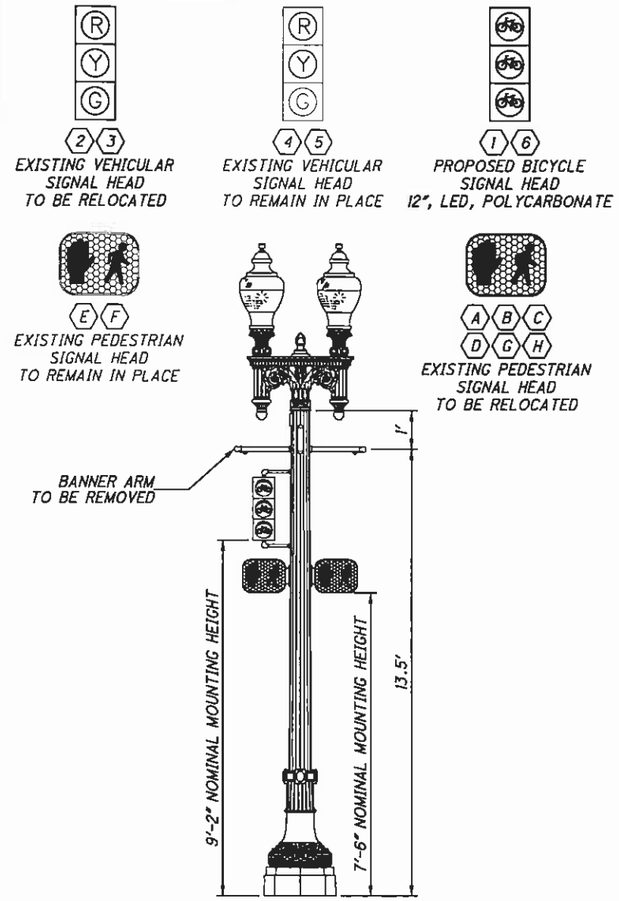

BICYCLE SIGNAL MOUNTING DETAIL
NOT TO SCALE

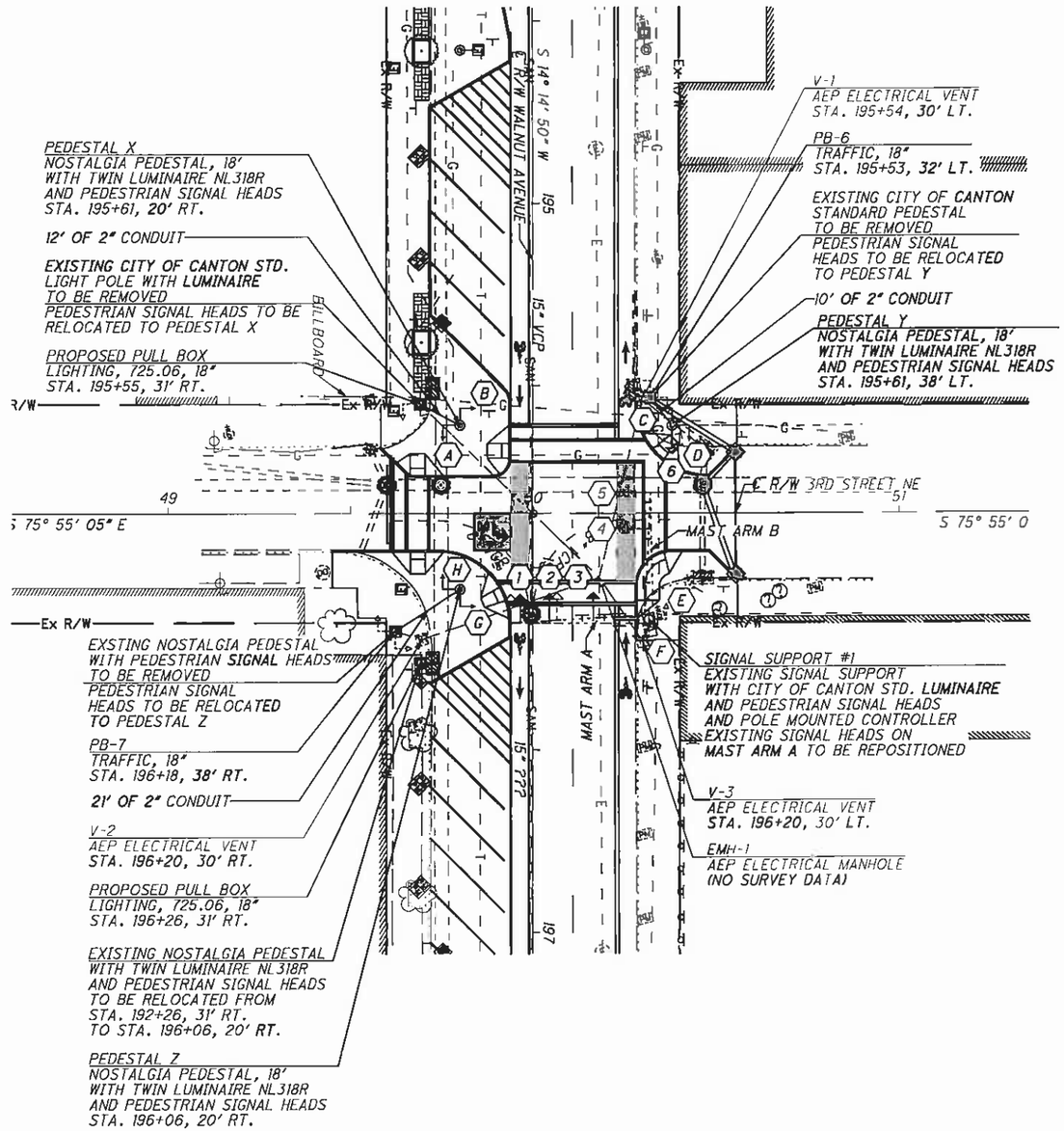

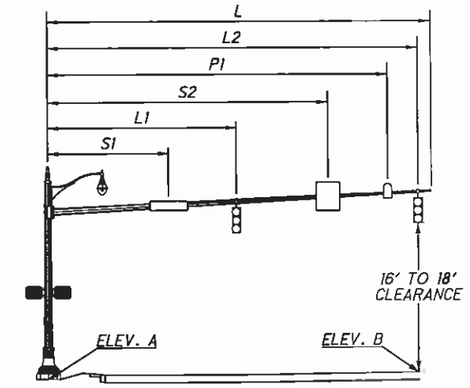

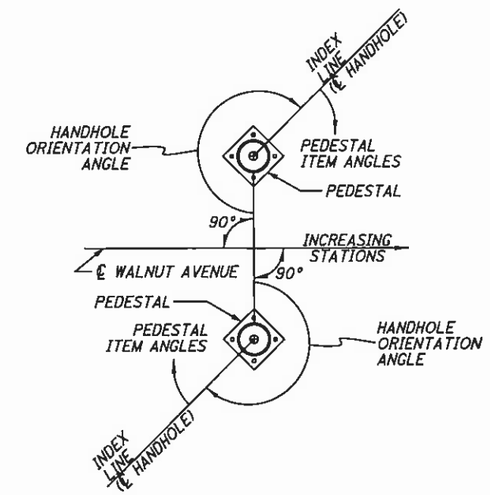

NOTES

1.) SIGNAL HEAD CONDUIT BRACKETS AND CONDUIT FITTINGS SHALL BE GALVANIZED AND PAINTED (EXCEPT POLE CLAMPS OR BANDS) TO MATCH THE BODY OF THE SIGNAL HEAD.

2.) THE SIGNAL HEAD BRACKET ARMS SHALL BE ATTACHED TO STEEL POLES BY ONE OF THE FOLLOWING METHODS:

A.) 1-1/2 INCHES (38 MILLIMETER) BLIND HALF COUPLING WELDED INTO THE POLE PRIOR TO GALVANIZING.
B.) BRACKET ARM HUB PLATES ATTACHED TO THE POLE AS PER NOTE 3.
C.) POLE CLAMP WITH THREADED HUB.

FIELD INSTALLATION OF THE WIRING HOLES FOR SIGNAL HEADS WILL BE PERMITTED PROVIDED THAT THE HOLES ARE DRILLED OR HOLE SAWN. NO TORCH CUTTING OR FIELD WELDING WILL BE PERMITTED. CUT SURFACES SHALL BE FILED SMOOTH AND COVERED WITH TWO COATS OF ZINC RICH PAINT. GROMMETS OR WIRING GUIDES SHALL BE INSTALLED IN THE HOLES.

3.) THE FOLLOWING MINIMUM SIZE FASTENERS SHALL BE USED FOR THE ATTACHMENT OF THE INDICTED HARDWARE TO STEEL POLES:

A.) CONDUIT BRACKET ARM HUB PLATES: 1/2 INCH (13 MILLIMETER) DIA. SCREW OF 3/4 INCH (19 MILLIMETER) WIDE PASSIVATED STAINLESS STEEL BAND (TWO FASTENERS OR BANDS PER HUB PLATE).
B.) CONDUIT: TWO HOLE CONDUIT STRAPS WITH 1/4 INCH (6.4 MILLIMETER) DIA. SCREWS OR 3/4 INCH (19 MILLIMETER) WIDE PASSIVATED STAINLESS STEEL BANDS.

THE SCREWS SHALL UTILIZE A DRILLED AND TAPPED HOLE OR BE THE SELF-TAPPING TYPE.

4.) ALL CONNECTIONS SHALL BE OF THE TRI-STUD DESIGN.

PEDESTAL CHART

PEDESTAL NO.	HANDHOLE ANGLE (DEG.)	ORIENTATION ANGLES (DEG.) FROM HANDHOLE		
		PEDESTRIAN SIGNAL	PEDESTRIAN SIGNAL	BICYCLE SIGNAL
X	180	HEAD A 0	HEAD B 90	
Y	180	HEAD C 270	HEAD D 0	HEAD 6 90
Z	180	HEAD G 270	HEAD H 0	

SUPPORT NO.	MAST ARM	L (FT.)	L1 (FT.)	L2 (FT.)	L3 (FT.)	P1 (FT.)	S1 (FT.)	S2 (FT.)	S3 (FT.)	S4 (FT.)	ELEVATION A	ELEVATION B	LOCATION	STATION	OFFSET
1	A	39	15	27	35	24	8	12	18	31	1036.73	1037.36	WALNUT	196+14	32' LT.
	B	36	25	35		27	10	22	29	32		1037.11			

HORIZONTAL SCALE IN FEET 0 10 20 40

CALCULATED JMK
CHECKED WLC

TRAFFIC SIGNAL PLAN
3RD STREET NE AND WALNUT AVENUE

WALNUT & CHERRY COMPLETE STREET BIKE LANES

R:\Stark\SART\Task 3 Canton\STA\91592\signals\sheets\91592CP007.dgn 6/28/2012 8:31:36 AM jroth

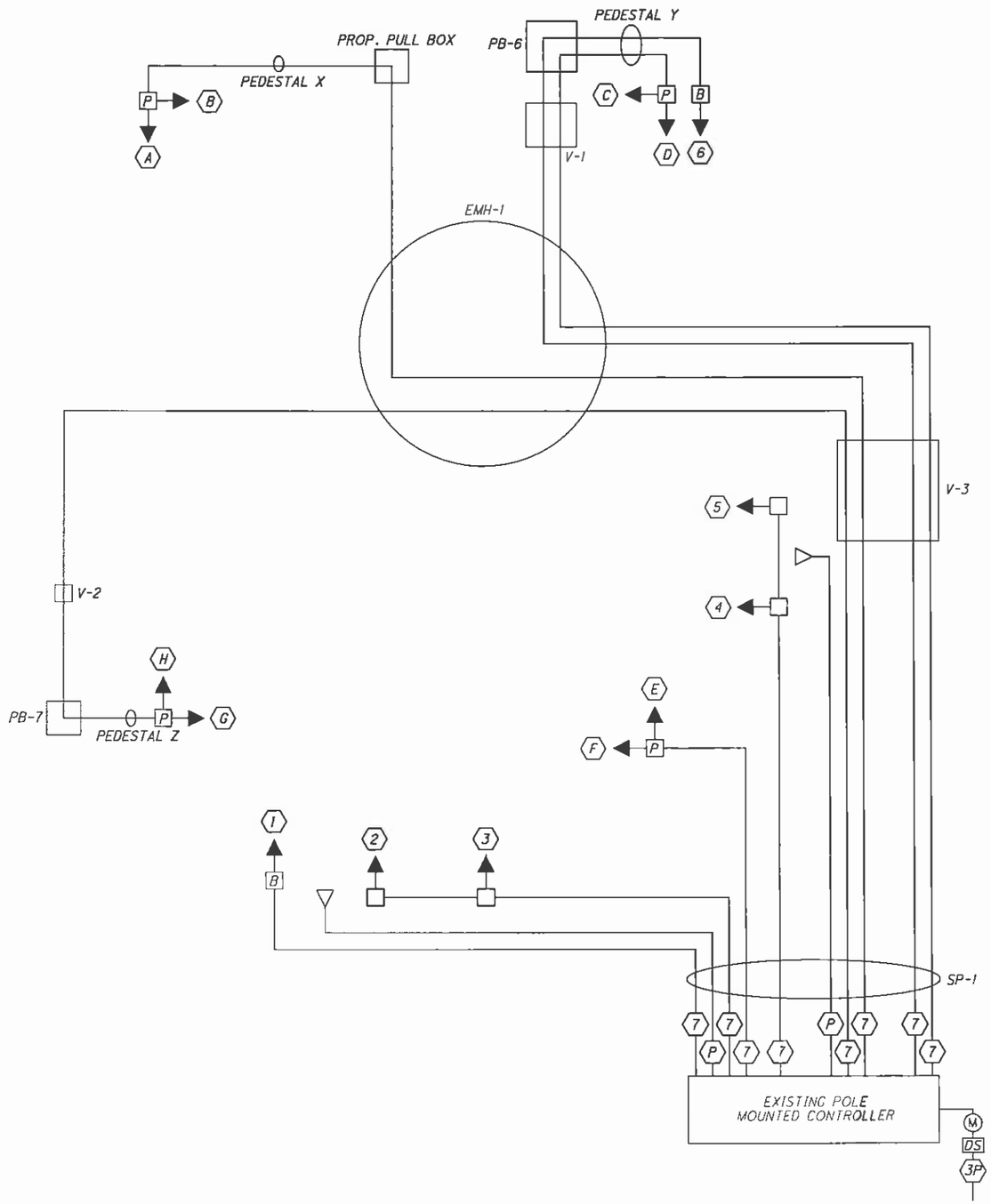

INTERVAL OR FEATURE		CONTROLLER MOVEMENT NO.							
INTERSECTION MOVEMENT		1	2	3	4	5	6	7	8
MINIMUM GREEN (INITIAL)	(SEC.)		5		5				
MAXIMUM GREEN I	(SEC.)		60		30				
MAXIMUM GREEN II	(SEC.)		60		30				
EXTENSION	(SEC.)								
YELLOW CHANGE	(SEC.)		3		3				
ALL RED CLEARANCE	(SEC.)		1.5		1.5				
WALK	(SEC.)		7		7				
PEDESTRIAN CLEARANCE	(SEC.)		10		10				
MAXIMUM RECALL	(ON/OFF)		ON		ON				
MINIMUM RECALL	(ON/OFF)								
PEDESTRIAN RECALL	(ON/OFF)		ON		ON				

*BICYCLE SIGNALS SHALL FOLLOW PEDESTRIAN SIGNAL PHASING AND TIMING

PATTERN NUMBER	CYCLE LENGTH (SEC.)	PERCENT SPLIT BY PHASE								OFFSET (SEC.)
		1	2	3	4	5	6	7	8	
PATTERN #1	75		60		40					5
PATTERN #2	80		60		40					84

TIME INTERVAL	PATTERN NUMBER
ALL DAY	#1

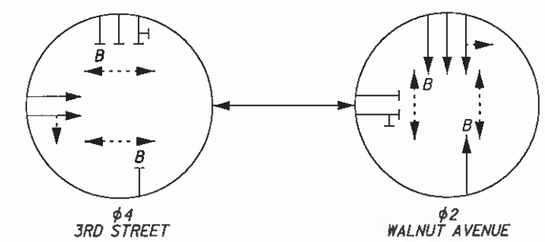

PREEMPT NOTES:
1. CHANNEL 1 SHALL PREEMPT TO SOUTHBOUND GREEN
2. CHANNEL 3 SHALL PREEMPT TO EASTBOUND GREEN

LEGEND

- (2) LOOP DETECTOR LEAD-IN CABLE
- (7) SIGNAL CABLE, 7/C, #14 AWG
- (P) EMERGENCY PREEMPTION CABLES
- (V) VIDEO DETECTION CABLES
- (3P) POWER CABLE, 3/C, #10 AWG, 600V
- (UI) INTERCONNECT CABLE, 6 PAIR, #19 AWG, SOLID, REA (PE-39)
- PB PULL BOX
- V VENT
- LP LIGHT POLE
- PP PEDESTRIAN POLE
- SP SIGNAL POLE
- UIC UNDERGROUND INTERCONNECT CABLE
- EMH AMERICAN ELECTRIC POWER MANHOLE
- DS DISCONNECT SWITCH
- M ELECTRIC METER
- VEHICULAR SIGNAL HEAD
- B BICYCLE SIGNAL HEAD
- P PEDESTRIAN SIGNAL HEAD
- PEDESTRIAN PUSHBUTTON
- VIDEO DETECTION UNIT
- EMERGENCY PREEMPTION UNIT
- POLE
- LUMINAIRE
- SPLICE LOCATION
- EXISTING TO REMAIN
- PROPOSED/TO BE RELOCATED

N

0 10 20 40 HORIZONTAL SCALE IN FEET

CALCULATED JMK
CHECKED WLC

TRAFFIC SIGNAL DETAILS
3RD STREET NE AND WALNUT AVENUE

WALNUT & CHERRY
COMPLETE STREET
BIKE LANES

R:\Stark\SARTA\Task 3 Canton\STA\91592\signals\sheets\91592CP008.dgn 6/28/2012 8:32:03 AM jroth

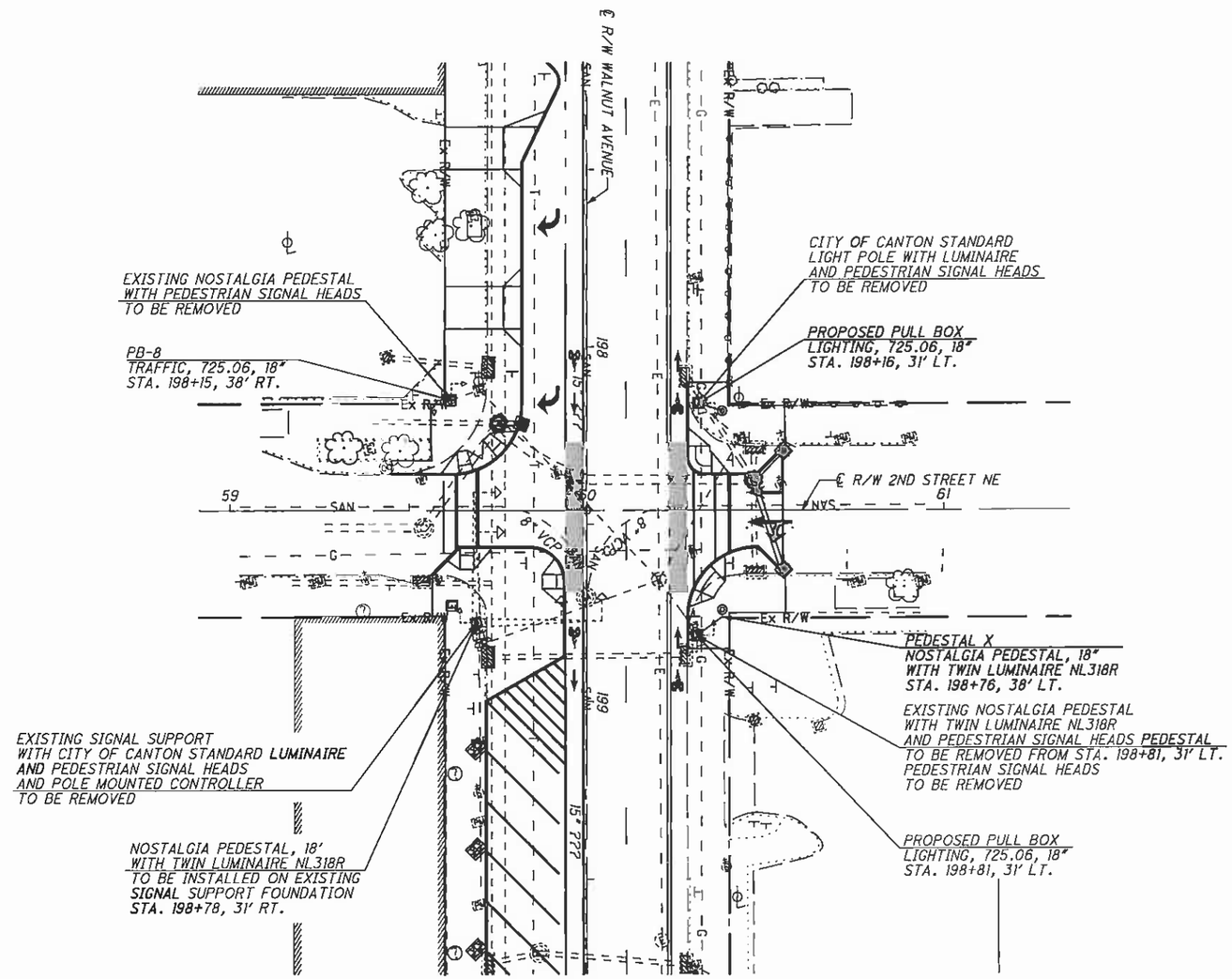

HORIZONTAL SCALE IN FEET 0 10 20 40

CALCULATED JMK
CHECKED WLC

TRAFFIC SIGNAL PLAN
2ND STREET NE AND WALNUT AVENUE

WALNUT & CHERRY COMPLETE STREET BIKE LANES

R:\Stark\SARTA\Task 3 Canton\STA\91592\signals\sheets\91592CP009.dgn 8/28/2012 2:56:35 PM bill

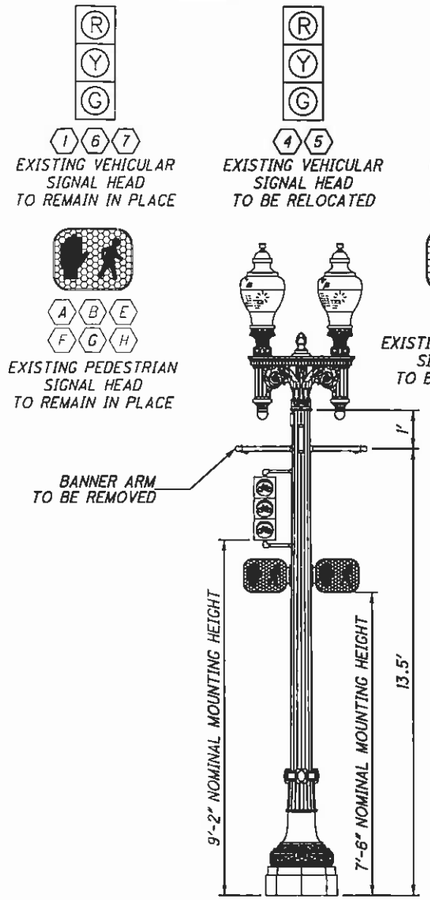

BICYCLE SIGNAL MOUNTING DETAIL
NOT TO SCALE

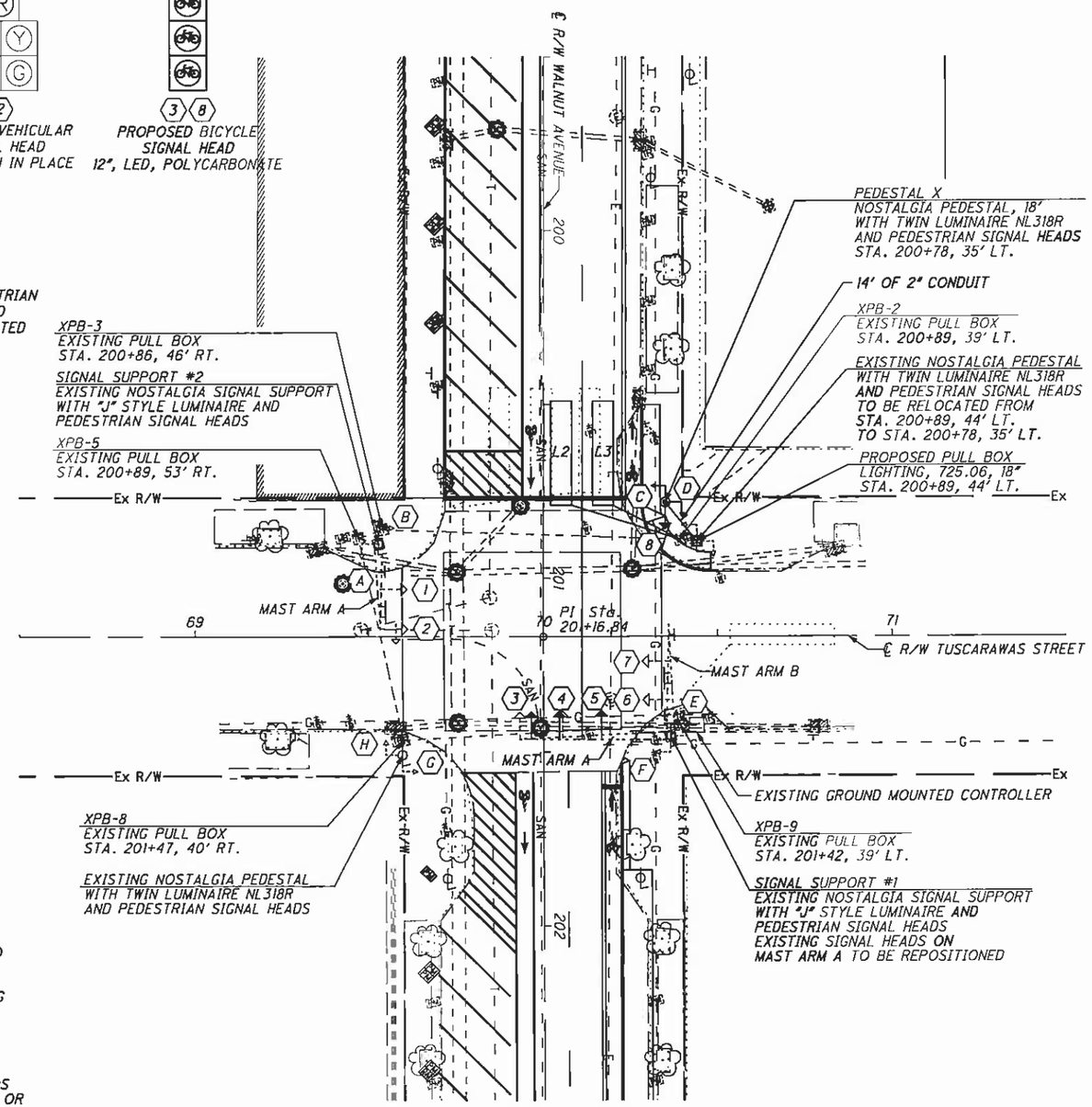

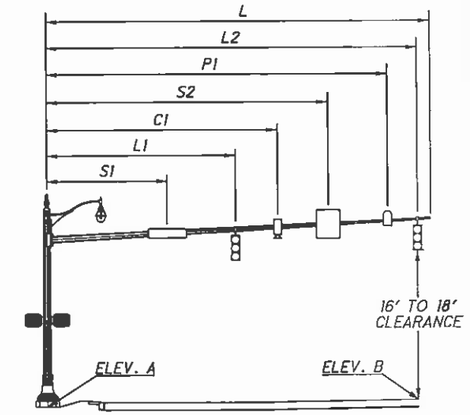

NOTES

1.) SIGNAL HEAD CONDUIT BRACKETS AND CONDUIT FITTINGS SHALL BE GALVANIZED AND PAINTED (EXCEPT POLE CLAMPS OR BANDS) TO MATCH THE BODY OF THE SIGNAL HEAD.

2.) THE SIGNAL HEAD BRACKET ARMS SHALL BE ATTACHED TO STEEL POLES BY ONE OF THE FOLLOWING METHODS:

A.) 1-1/2 INCHES (38 MILLIMETER) BLIND HALF COUPLING WELDED INTO THE POLE PRIOR TO GALVANIZING.
B.) BRACKET ARM HUB PLATES ATTACHED TO THE POLE AS PER NOTE 3.
C.) POLE CLAMP WITH THREADED HUB.

FIELD INSTALLATION OF THE WIRING HOLES FOR SIGNAL HEADS WILL BE PERMITTED PROVIDED THAT THE HOLES ARE DRILLED OR HOLE SAWN. NO TORCH CUTTING OR FIELD WELDING WILL BE PERMITTED. CUT SURFACES SHALL BE FILED SMOOTH AND COVERED WITH TWO COATS OF ZINC RICH PAINT. GROMMETS OR WIRING GUIDES SHALL BE INSTALLED IN THE HOLES.

3.) THE FOLLOWING MINIMUM SIZE FASTENERS SHALL BE USED FOR THE ATTACHMENT OF THE INDICTED HARDWARE TO STEEL POLES:

A.) CONDUIT BRACKET ARM HUB PLATES: 1/2 INCH (13 MILLIMETER) DIA. SCREW OF 3/4 INCH (19 MILLIMETER) WIDE PASSIVATED STAINLESS STEEL BAND (TWO FASTENERS OR BANDS PER HUB PLATE).
B.) CONDUIT: TWO HOLE CONDUIT STRAPS WITH 1/4 INCH (6.4 MILLIMETER) DIA. SCREWS OR 3/4 INCH (19 MILLIMETER) WIDE PASSIVATED STAINLESS STEEL BANDS.

THE SCREWS SHALL UTILIZE A DRILLED AND TAPPED HOLE OR BE THE SELF-TAPPING TYPE.

4.) ALL CONNECTIONS SHALL BE OF THE TRI-STUD DESIGN.

PEDESTAL CHART

PEDESTAL NO.	HANDHOLE ANGLE (DEG.)	ORIENTATION ANGLES (DEG.) FROM HANDHOLE		
		PEDESTRIAN SIGNAL	PEDESTRIAN SIGNAL	BICYCLE SIGNAL
X	180	HEAD C 270	HEAD D 0	HEAD 8 90

SUPPORT NO.	MAST ARM	L (FT.)	L1 (FT.)	L2 (FT.)	L3 (FT.)	P1 (FT.)	C1 (FT.)	S1 (FT.)	S2 (FT.)	S3 (FT.)	S4 (FT.)	ELEVATION A	ELEVATION B	LOCATION	STATION	OFFSET
1	A	44	20	32	40	26		10				1037.41	1036.92	WALNUT	201+45	36' LT.
	B	32	11	21		25		6	15	18	29		1037.20			
2	A	25	13	24		23		8	18	21		1037.47	1037.47	WALNUT	200+90	47' RT.

CALCULATED JMK
CHECKED WLC

HORIZONTAL SCALE IN FEET 0 10 20 40

TRAFFIC SIGNAL PLAN
TUSCARAWAS STREET AND WALNUT AVENUE

WALNUT & CHERRY STREET COMPLETE BIKE LANES

R:\Stark\SARTA\Task 3 Canton\STA\91592\signals\sheets\91592CP010.dgn 6/28/2012 8:33:28 AM jroth

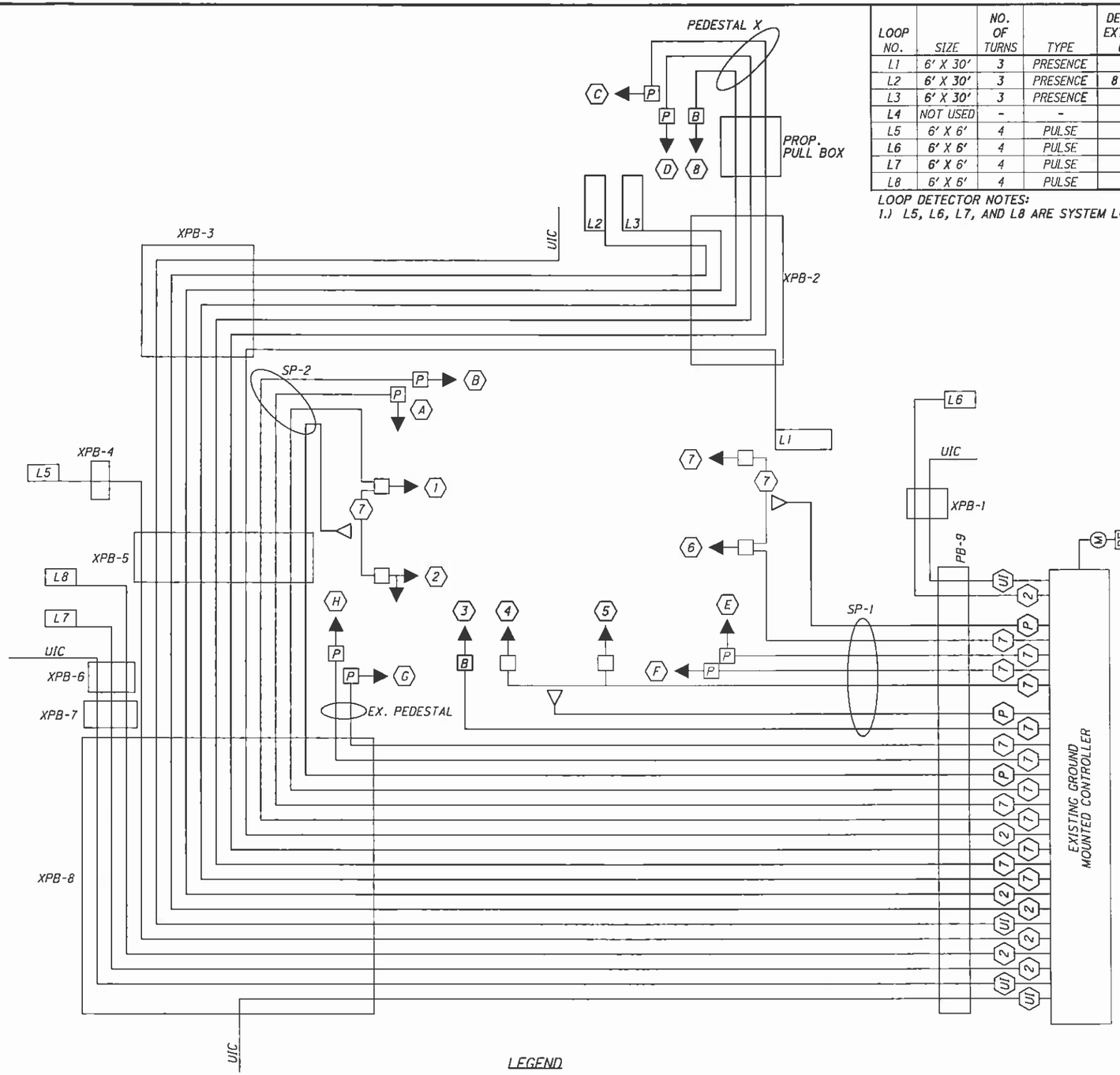

LOOP NO.	SIZE	NO. OF TURNS	TYPE	DELAY OR EXTENSION (SEC.)	DETECTOR UNIT NO.	PHASE
L1	6' X 30'	3	PRESENCE	-	1	1
L2	6' X 30'	3	PRESENCE	8 DELAY	3	4
L3	6' X 30'	3	PRESENCE	-	4	4
L4	NOT USED	-	-	-	-	-
L5	6' X 6'	4	PULSE	-	6	
L6	6' X 6'	4	PULSE	-	7	
L7	6' X 6'	4	PULSE	-	8	
L8	6' X 6'	4	PULSE	-	9	

LOOP DETECTOR NOTES:
1.) L5, L6, L7, AND L8 ARE SYSTEM LOOPS

INTERVAL OR FEATURE		CONTROLLER MOVEMENT NO.							
INTERSECTION MOVEMENT		1	2	3	4	5	6	7	8
MINIMUM GREEN (INITIAL)	(SEC.)	5	5		5		5		
MAXIMUM GREEN I	(SEC.)	14	60		30		60		
MAXIMUM GREEN II	(SEC.)	14	60		30		60		
EXTENSION	(SEC.)	3	3		3		3		
YELLOW CHANGE	(SEC.)	3	3		3		3		
ALL RED CLEARANCE	(SEC.)	1	1.5		1.5		1.5		
WALK	(SEC.)		7		7		7		
PEDESTRIAN CLEARANCE	(SEC.)		10		10		10		
MAXIMUM RECALL	(ON/OFF)		ON				ON		
MINIMUM RECALL	(ON/OFF)								
PEDESTRIAN RECALL	(ON/OFF)		ON		ON		ON		

*BICYCLE SIGNALS SHALL FOLLOW PEDESTRIAN SIGNAL PHASING AND TIMING

PATTERN NUMBER	CYCLE LENGTH (SEC.)	PERCENT SPLIT BY PHASE								OFFSET (SEC.)
		1	2	3	4	5	6	7	8	
PATTERN #1	75	18	42		40		42			45

TIME INTERVAL	PATTERN NUMBER
ALL DAY	#1

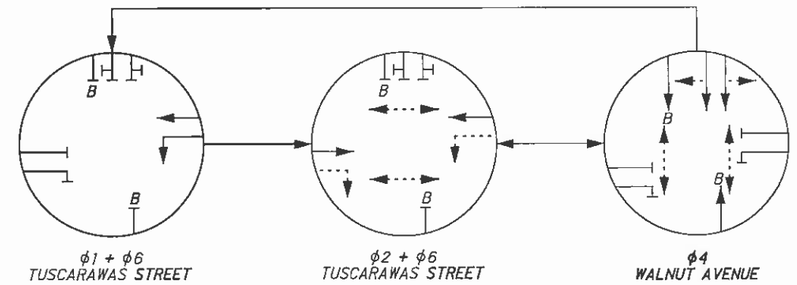

PREEMPT NOTES:

1. CHANNEL 1 SHALL PREEMPT TO SOUTHBOUND GREEN
2. CHANNEL 3 SHALL PREEMPT TO WESTBOUND GREEN
3. CHANNEL 4 SHALL PREEMPT TO EASTBOUND GREEN

PREEMPT NOTES:

1.) ACTIVE WALK INDICATIONS SHALL IMMEDIATELY GO TO "DON'T WALK" UPON RECEIVING PREEMPTION SIGNAL.

2.) IF PHASE ACTIVE CONFLICTS WTIH PREEMPT PHASE CALLED, IT SHALL IMMEDIATELY TIME ITS YELLOW AND ALL RED CLEARANCES.

3.) IF ACTIVE PHASE = THE PREEMPT PHASE, THEN THE PHASE SHALL HOLD FOR THE DURATION OF THE PREEMPT SIGNAL.

4.) AFTER RELEASE FROM PREEMPT, YELLOW AND ALL RED CLEARANCE SHALL BE DISPLAYED AND RETURN PHASE SHALL BE ϕ2 + ϕ6.

5.) IF PREEMPT PHASES = RETURN PHASES ϕ2 + ϕ6 THEN YELLOW AND ALL RED CLEARANCE AFTER PREEMPT SHALL NOT BE DISPLAYED.

ϕ SELECTOR		CONTROLLER
CH 1	SB	PREEMPT 3
CH 2	NB	PREEMPT 4
CH 3	WB	PREEMPT 5
CH 4	EB	PREEMPT 6

LEGEND

- (2) LOOP DETECTOR LEAD-IN CABLE
- (7) SIGNAL CABLE, 7/C, #14 AWG
- (P) EMERGENCY PREEMPTION CABLES
- (V) VIDEO DETECTION CABLES
- (3P) POWER CABLE, 3/C, #10 AWG, 600V
- (UI) INTERCONNECT CABLE, 6 PAIR, #19 AWG, SOLID, REA (PE-39)
- PB PULL BOX
- V VENT
- LP LIGHT POLE
- PP PEDESTRIAN POLE
- SP SIGNAL POLE
- UIC UNDERGROUND INTERCONNECT CABLE
- EMH AMERICAN ELECTRIC POWER MANHOLE
- (DS) DISCONNECT SWITCH
- (M) ELECTRIC METER
- VEHICULAR SIGNAL HEAD
- (B) BICYCLE SIGNAL HEAD
- (P) PEDESTRIAN SIGNAL HEAD
- PEDESTRIAN PUSHBUTTON
- VIDEO DETECTION UNIT
- EMERGENCY PREEMPTION UNIT
- POLE
- LUMINAIRE
- SPLICE LOCATION
- EXISTING TO REMAIN
- PROPOSED/TO BE RELOCATED

HORIZONTAL SCALE IN FEET 0 10 20 40

CALCULATED JMK
CHECKED WLC

TRAFFIC SIGNAL DETAILS
TUSCARAWAS STREET AND WALNUT AVENUE

WALNUT & CHERRY COMPLETE STREET BIKE LANES

R:\Stark\SART\Task 3 Canton\STA\91592\signals\sheets\91592CP011.dgn 6/28/2012 8:34:17 AM jroth

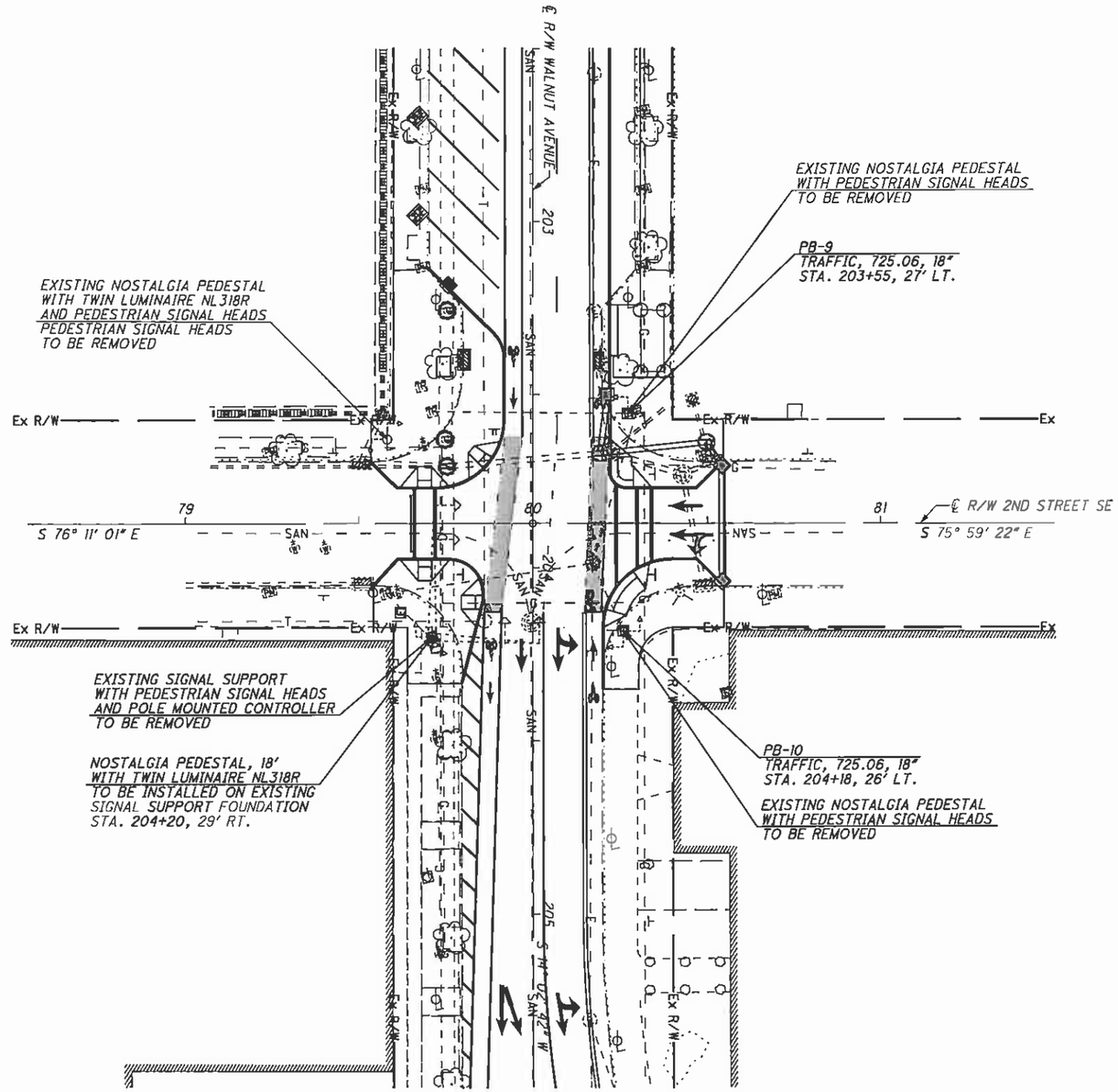

HORIZONTAL SCALE IN FEET
0 10 20 40

CALCULATED JMK
CHECKED WLC

TRAFFIC SIGNAL PLAN
2ND STREET SE AND WALNUT AVENUE

WALNUT & CHERRY
COMPLETE STREET
BIKE LANES

R:\Clark\SARTA\Task 3 Canton\STA\91592\signals\sheets\91592CP012.dgn 6/28/2012 8:34:48 AM jroth

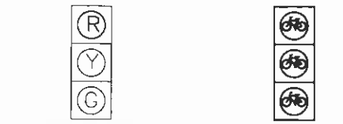

EXISTING VEHICULAR SIGNAL HEAD TO REMAIN IN PLACE

PROPOSED BICYCLE SIGNAL HEAD

EXISTING PEDESTRIAN SIGNAL HEAD TO REMAIN IN PLACE

EXISTING PEDESTRIAN SIGNAL HEAD TO BE RELOCATED

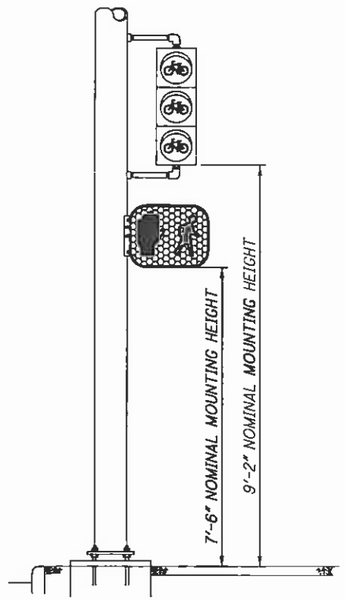

BICYCLE SIGNAL MOUNTING DETAIL

NOT TO SCALE

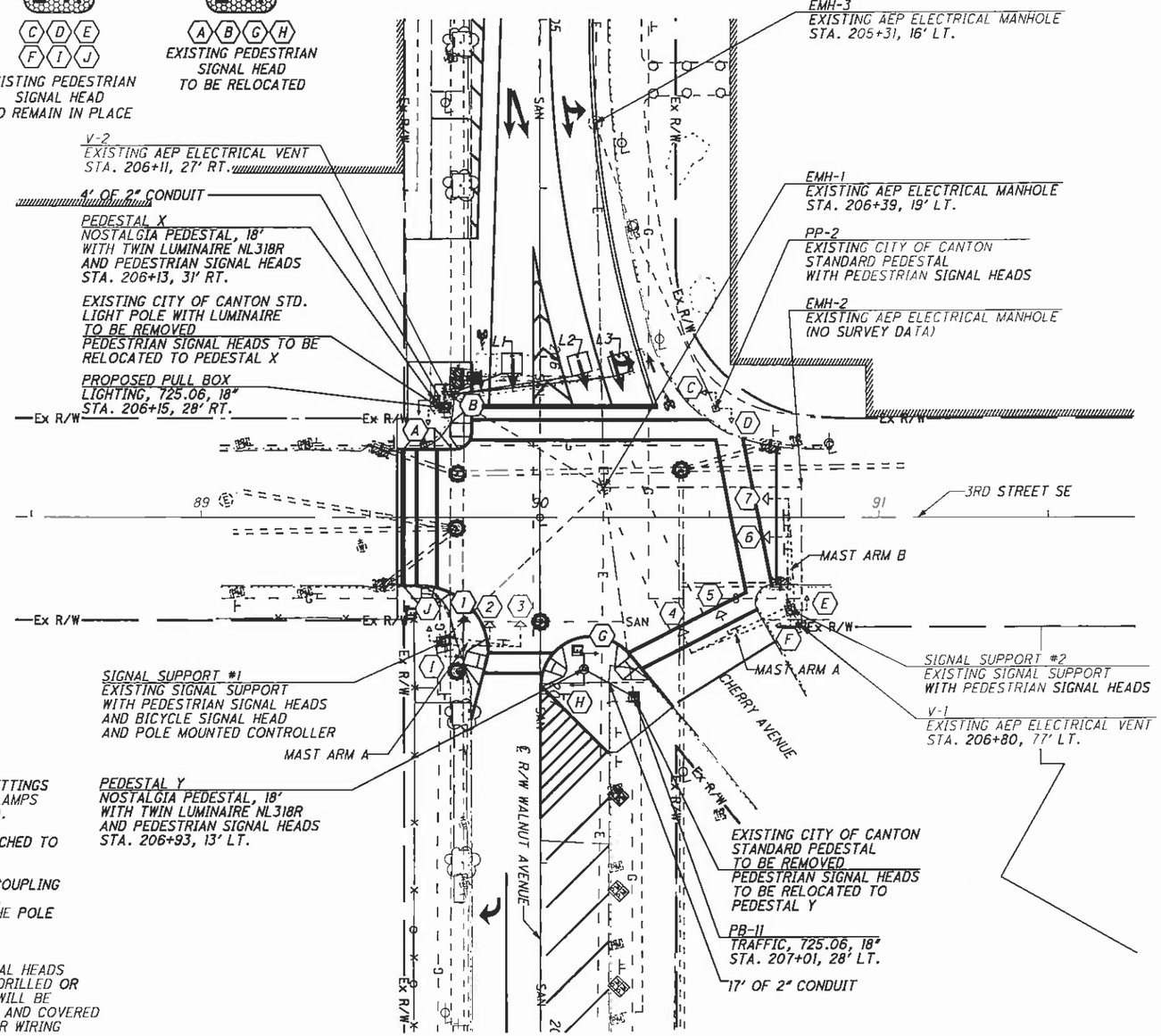

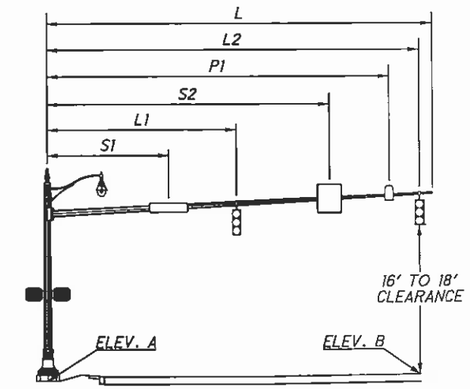

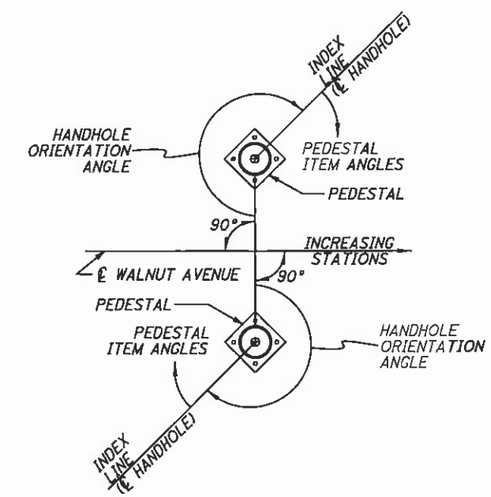

PEDESTAL CHART			
PEDESTAL NO.	HANDHOLE ANGLE (DEG.)	ORIENTATION ANGLES (DEG.) FROM HANDHOLE	
		PEDESTRIAN SIGNAL	PEDESTRIAN SIGNAL
X	180	HEAD A 0	HEAD B 90
Y	180	HEAD G 270	HEAD H 90

NOTES

1.) SIGNAL HEAD CONDUIT BRACKETS AND CONDUIT FITTINGS SHALL BE GALVANIZED AND PAINTED (EXCEPT POLE CLAMPS OR BANDS) TO MATCH THE BODY OF THE SIGNAL HEAD.

2.) THE SIGNAL HEAD BRACKET ARMS SHALL BE ATTACHED TO STEEL POLES BY ONE OF THE FOLLOWING METHODS:

A.) 1-1/2 INCHES (38 MILLIMETER) BLIND HALF COUPLING WELDED INTO THE POLE PRIOR TO GALVANIZING.
B.) BRACKET ARM HUB PLATES ATTACHED TO THE POLE AS PER NOTE 3.
C.) POLE CLAMP WITH THREADED HUB.

FIELD INSTALLATION OF THE WIRING HOLES FOR SIGNAL HEADS WILL BE PERMITTED PROVIDED THAT THE HOLES ARE DRILLED OR HOLE SAWN. NO TORCH CUTTING OR FIELD WELDING WILL BE PERMITTED. CUT SURFACES SHALL BE FILED SMOOTH AND COVERED WITH TWO COATS OF ZINC RICH PAINT. GROMMETS OR WIRING GUIDES SHALL BE INSTALLED IN THE HOLES.

3.) THE FOLLOWING MINIMUM SIZE FASTENERS SHALL BE USED FOR THE ATTACHMENT OF THE INDICTED HARDWARE TO STEEL POLES:

A.) CONDUIT BRACKET ARM HUB PLATES: 1/2 INCH (13 MILLIMETER) DIA. SCREW OF 3/4 INCH (19 MILLIMETER) WIDE PASSIVATED STAINLESS STEEL BAND (TWO FASTENERS OR BANDS PER HUB PLATE).
B.) CONDUIT: TWO HOLE CONDUIT STRAPS WITH 1/4 INCH (6.4 MILLIMETER) DIA. SCREWS OR 3/4 INCH (19 MILLIMETER) WIDE PASSIVATED STAINLESS STEEL BANDS.

THE SCREWS SHALL UTILIZE A DRILLED AND TAPPED HOLE OR BE THE SELF-TAPPING TYPE.

4.) ALL CONNECTIONS SHALL BE OF THE TRI-STUD DESIGN.

SUPPORT NO.	MAST ARM	L (FT.)	L1 (FT.)	L2 (FT.)	L3 (FT.)	P1 (FT.)	S1 (FT.)	S2 (FT.)	S3 (FT.)	ELEVATION A	ELEVATION B	LOCATION	STATION	OFFSET
1	A	23	5	13	22	11	17			1034.31	1034.40	WALNUT	206+84	28' RT.
2	A	33	20	32		26				1034.70	1034.55	WALNUT	206+75	74' LT.
	B	34	22	33		30	18	25	28		1033.93			

HORIZONTAL SCALE IN FEET 0 10 20 40

CALCULATED JMK
CHECKED WLC

TRAFFIC SIGNAL PLAN
3RD STREET SE AND WALNUT AVENUE

WALNUT & CHERRY COMPLETE STREET BIKE LANES

R:\Stark\SART\Task 3 Canton\STA\91592\signals\sheets\91592CP013.dgn 6/28/2012 8:35:51 AM jrolh

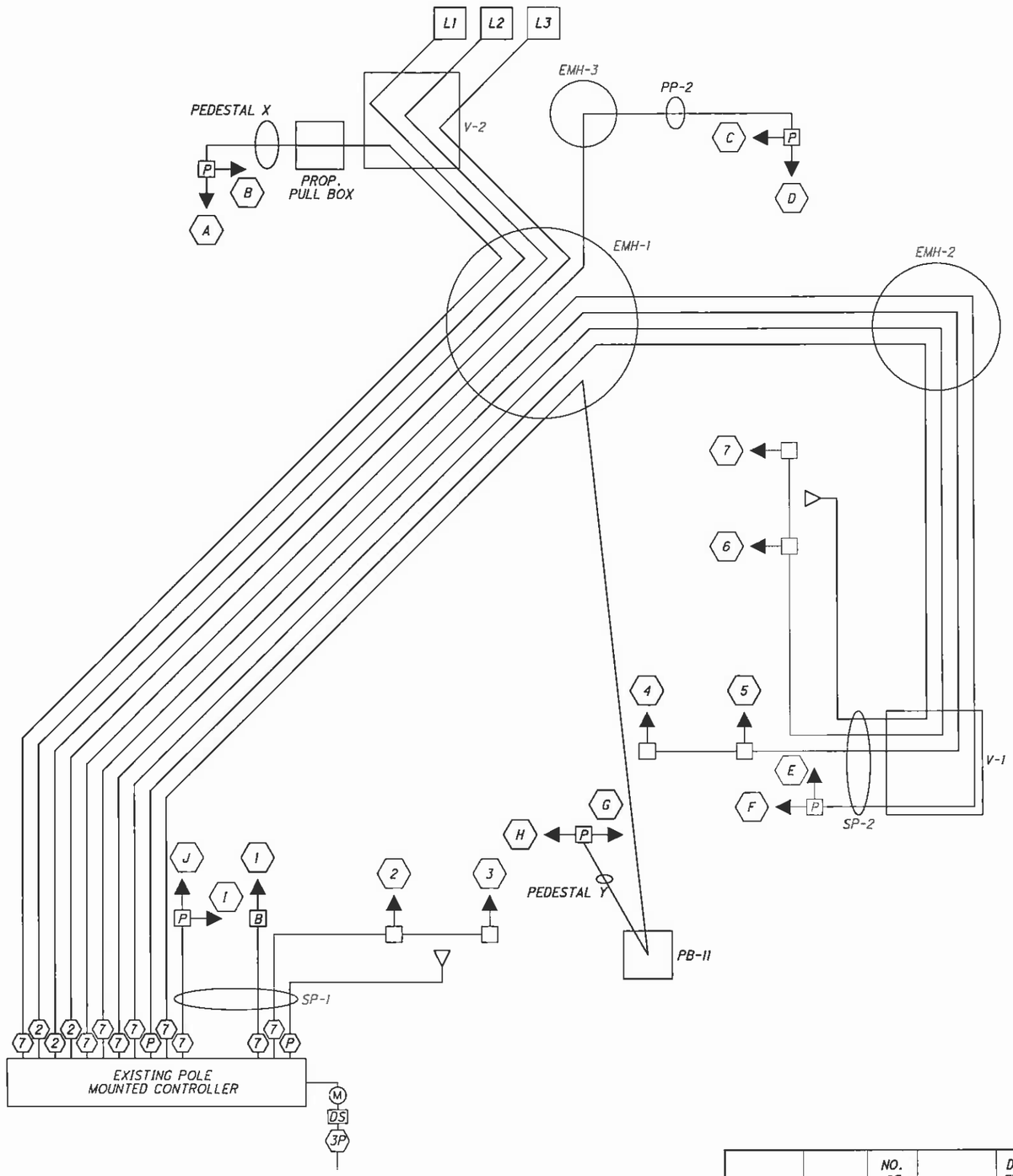

INTERVAL OR FEATURE		CONTROLLER MOVEMENT NO.							
INTERSECTION MOVEMENT		1	2	3	4	5	6	7	8
MINIMUM GREEN (INITIAL)	(SEC.)		5		5				
MAXIMUM GREEN 1	(SEC.)		60		30				
MAXIMUM GREEN 2	(SEC.)		60		30				
EXTENSION	(SEC.)								
YELLOW CHANGE	(SEC.)		4		4				
ALL RED CLEARANCE	(SEC.)		1		1				
WALK	(SEC.)		7		11				
PEDESTRIAN CLEARANCE	(SEC.)		10		10				
MAXIMUM RECALL	(ON/OFF)		ON		ON				
MINIMUM RECALL	(ON/OFF)								
PEDESTRIAN RECALL	(ON/OFF)		ON		ON				

*BICYCLE SIGNALS SHALL FOLLOW PEDESTRIAN SIGNAL PHASING AND TIMING

PATTERN NUMBER	CYCLE LENGTH (SEC.)	PERCENT SPLIT BY PHASE								OFFSET (SEC.)
		1	2	3	4	5	6	7	8	
PATTERN #1	75		60		40					39
PATTERN #2	80		60		40					12

TIME INTERVAL	PATTERN NUMBER
ALL DAY	#1

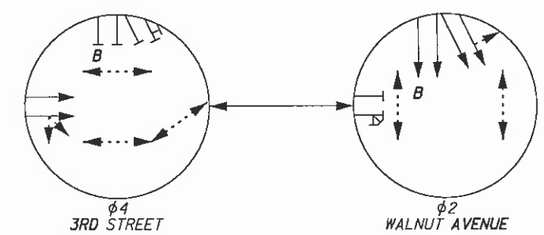

PREEMPT NOTES:
1. CHANNEL 1 SHALL PREEMPT TO SOUTHBOUND GREEN
2. CHANNEL 4 SHALL PREEMPT TO EASTBOUND GREEN

DETECTOR	SIZE	NO. OF TURNS	TYPE	DELAY OR EXTENSION (SEC.)	PHASE
L1	6' X 6'	3	PULSE	-	SYS.
L2	6' X 6'	3	PULSE	-	SYS.
L3	6' X 6'	3	PULSE	-	SYS.

LEGEND

- (2) LOOP DETECTOR LEAD-IN CABLE
- (7) SIGNAL CABLE, 7/C, #14 AWG
- (P) EMERGENCY PREEMPTION CABLES
- (V) VIDEO DETECTION CABLES
- (3P) POWER CABLE, 3/C, #10 AWG, 600V
- (UI) INTERCONNECT CABLE, 6 PAIR, #19 AWG, SOLID, REA (PE-39)
- PB PULL BOX
- V VENT
- LP LIGHT POLE
- PP PEDESTRIAN POLE
- SP SIGNAL POLE
- UIC UNDERGROUND INTERCONNECT CABLE
- EMH AMERICAN ELECTRIC POWER MANHOLE
- DS DISCONNECT SWITCH
- (M) ELECTRIC METER
- VEHICULAR SIGNAL HEAD
- B BICYCLE SIGNAL HEAD
- P PEDESTRIAN SIGNAL HEAD
- PEDESTRIAN PUSHBUTTON
- VIDEO DETECTION UNIT
- EMERGENCY PREEMPTION UNIT
- POLE
- LUMINAIRE
- SPLICE LOCATION
- EXISTING TO REMAIN
- PROPOSED/TO BE RELOCATED

HORIZONTAL SCALE IN FEET 0 10 20 40

CALCULATED JMK
CHECKED WLC

TRAFFIC SIGNAL DETAILS
3RD STREET SE AND WALNUT AVENUE

WALNUT & CHERRY COMPLETE STREET BIKE LANES

R:\Stark\SARTA\Task 3 Canton\STA\91592\signals\sheets\91592CP014.dgn 6/28/2012 8:36:22 AM jroth

ITEM 625 - POWER SERVICE, AS PER PLAN
IN ADDITION TO THE REQUIREMENTS OF THE SPECIFICATIONS, THE FOLLOWING IS ADDED.

THE POWER SUPPLYING AGENCY FOR THIS PROJECT IS:

ELECTRIC:
AMERICAN ELECTRIC POWER
301 CLEVELAND AVENUE S.W.
CANTON, OHIO 44720
PHONE: 330-438-7061

POWER SERVICE: 480 VOLT, 3-WIRE, SINGLE PHASE, GROUNDED NEUTRAL. THIS PROJECT HAS BEEN DESIGNED ON THE BASIS OF 5% VOLTAGE DROP WITH A MAXIMUM UNIFORMITY RATIO OF 4.0 TO 1.0 FOR CONVENTIONAL UNITS AND 3.0 TO 1.0 FOR HIGH MAST UNITS.

THE CONTRACTOR SHALL PAY ALL ELECTRICAL ENERGY CHARGES FOR NEW POWER SERVICES ESTABLISHED BY THIS PROJECT. UPON COMPLETION OF THIS PROJECT, POWER SERVICE ELECTRICAL ENERGY ACCOUNTS SHALL BE TRANSFERRED TO MAINTAINING AGENCY. THIS SHALL INCLUDE NEW POWER SERVICE ESTABLISHED BY THIS PROJECT AS WELL AS REASSIGNMENT OF EXISTING SERVICE DUE TO WORK PERFORMED BY THIS PROJECT.

THE CONTRACTOR SHALL PROVIDE AND INSTALL ONE MILLBANK CP3B SWITH LOAD CONCTROLLER WORK PAD AND GROUND ROD. THERE IS NO SEPARATE PAY ITEM FOR MILLBANK PEDESTAL AND GROUND ROD. THE CONTRACTOR SHALL PROVIDE AND INSTALL ALL NECESSARY CONDUIT, WIRING, RISERS, HARDWARE, AND FITTINGS FOR EACH POWER SERVICE LOCATION FROM THE DESIGNATED POWER SOURCE TO THE PROPOSED MILLBANK AT LOCATIONS SHOWN IN THE PLANS.

PAYMENT WILL BE MADE AT THE UNIT BID PRICE FOR EACH CMS ITEM 625 - POWER SERVICE, AS PER PLAN WHICH SHALL BE FULL COMPENSATION FOR ALL LABOR, MATERIALS AND INCIDENTALS REQUIRED TO COMPLETE THIS ITEM IN A SATISFACTORY AND WORKMANLIKE MANNER.

ITEM 625 - LIGHT POLE, DECORATIVE, AS PER PLAN
NOSTALGIA PEDESTALS SHALL BE PACIFIC FAMILY P2000G SERIES (SEE DETAILS ON PLAN SHEETS XXX) AND MANUFACTURED BY:

UNION METAL CORPORATION
1432 MAPLE AVENUE N.E.
P.O. BOX 9920
CANTON, OH 44711
PHONE: 330-456-7653

THE CONTRACTOR SHALL FURNISH AND INSTALL NOSTALGIA PEDESTALS AS PER PLANS. PEDESTALS SHALL INCLUDE HANDHOLE, CHAIN AND COVER. ALL HARDWARE SHALL BE INCLUDED WITH THIS ITEM. THE ENTIRE ASSEMBLY SHALL BE DESIGNED TO MEET THE REQUIREMENTS OF AASHTO. A STEEL FABRICATION TENON SHALL BE WELDED TO THE TOP OF THE SHAFT AND SIZED TO ACCEPT PEDESTRIAN SIGNALS AS REQUIRED. THE ORNAMENTAL BASE SHALL BE UNION METAL CORPORATION BASE NO. 74 AND SHALL BE LEVEL IN ORDER TO ACCEPT THE BASE ASSEMBLY AND SHALL BE AT LEAST AS LARGE AS THE BOTTOM DIMENSION OF THE BASE CASTING. ALL PROPOSED EXTERIOR CONNECTIONS (PEDESTRIAN SIGNAL HEADS, SCHOOL SPEED LIMIT SIGNS, ETC.) TO NOSTALGIA SIGNAL POLES SHALL BE FIELD DRILLED. BANDING OR STRAPPING ON THE NOSTALGIA SIGNAL POLES SHALL NOT BE PERMITTED.

ITEM 625 - LIGHT POLE FOUNDATION, AS PER PLAN
FOUNDATIONS FOR NOSTALGIA PEDESTALS SHALL BE CONSTRUCTED AS PER DETAILS ON PLAN SHEET XXX.

ITEM 625 - LIGHT POLE REMOVED FOR STORAGE, AS PER PLAN
ITEM 625 - LUMINAIRE REMOVED FOR STORAGE, AS PER PLAN
THE CONTRACTOR SHALL BE RESPONSIBLE FOR REMOVING AND STORING EXISTING NOSTALGIA LIGHT POLES AND EXISTING NOSTALGIA LUMINAIRES INDICATED ON THE PLANS PER 625.21 AND 625.22. LIGHT POLES SHALL BE DELIVERED TO THE CITY OF CANTON TRAFFIC SIGN AND PAINT DEPARTMENT AT 2506 CLEVELAND AVE. SW, CANTON, OHIO. THE CONTRACTOR SHALL CONTACT XXX (330-XXX-XXXX) TO ARRANGE TIME FOR DELIVERY OF THE LIGHT POLES. UNLESS OTHERWISE DESIGNATED, ALL OTHER ITEMS SHALL BE DELIVERED TO THE CITY OF CANTON TRAFFIC SIGNAL DEPARTMENT AT 2436 30TH ST. NE, CANTON OH. THE CONTRACTOR SHALL CONTACT XXX (330-XXX-XXXX) TO ARRANGE TIME FOR DELIVERY OF ALL MATERIALS.

CALCULATED JMK
CHECKED WLC

LIGHTING NOTES

WALNUT & CHERRY
COMPLETE STREET
BIKE LANES

R:\Stark\SARTA\Task 3_Canton\STA\91592\lighting\sheets\91592LN001.dgn 6/28/2012 9:26:53 AM jroth

ITEM 625 - LUMINAIRE, TWIN POST TOP, AS PER PLAN

IN ADDITION TO THE REQUIREMENTS OF ODOT'S CONSTRUCTION AND MATERIAL SPECIFICATIONS, LUMINAIRES FOR POST-TOP LIGHTING UNITS USED IN GREEN SPACES OF REST AREAS SHALL BE AS FOLLOWS:

LUMINAIRES FOR SIGNAL POLE LIGHTING SHALL BE UNION METAL CORPORATION, "J" STYLE LUMINAIRE WITH PLUMBIZER AND 250 WATT METAL HALIDE LAMP.

LUMINAIRE REFRACTORS SHALL BE UV-STABILIZED POLYCARBONATE OR ACRYLIC DOME REFRACTORS.

PAYMENT WILL BE MADE AT THE UNIT BID PRICE FOR EACH CMS ITEM 625, "LUMINAIRE, CONVENTIONAL, AS PER PLAN" FOR EACH LUMINAIRE WHICH SHALL BE FULL COMPENSATION FOR ALL LABOR, MATERIALS AND INCIDENTALS REQUIRED TO COMPLETE THIS ITEM IN A SATISFACTORY AND WORKMANLIKE MANNER

PAYMENT WILL BE MADE AT THE UNIT PRICE BID UNDER CMS ITEM 625 - LUMINAIRE, TWIN POST-TOP, AS PER PLAN FOR EACH LUMINAIRE WHICH SHALL BE FULL COMPENSATION FOR ALL LABOR, MATERIALS AND INCIDENTALS REQUIRED TO COMPLETE THIS ITEM IN A SATIS- FACTORY AND WORKMANLIKE MANNER.

PADLOCKS AND KEYS

PADLOCKS FURNISHED SHALL BE EITHER BRASS OR BRONZE, EQUAL TO MASTER NO. 4BKA OR WILSON BOHANNAN 660A, AND SHALL BE KEYED IN ACCORDANCE WITH CMS 631.06. PAYMENT SHALL BE INCLUDED IN THE BID FOR THE ITEM(S) BEING LOCKED.

CALCULATED JMK
CHECKED WLC

LIGHTING NOTES

WALNUT & CHERRY COMPLETE STREET BIKE LANES

R:\Stark\SARTA\Task 3 Canton\STA\91592\lighting\sheets\91592LN002.dgn 6/28/2012 9:27:21 AM jroth

REFERENCE NO.	SHEET NO.	SIDE	ROADWAY	STATION TO STATION		202 REMOVAL MISC.: LUMINAIRE AND BRACKET ARM	202 REMOVAL MISC.: UTILITY POLE WITH LUMINAIRE AND BRACKET ARM	625 CONNECTOR KIT, TYPE II	625 CONNECTOR KIT, TYPE III	625 LIGHT POLE, DECORATIVE, AS PER PLAN	625 LIGHT POLE FOUNDATION, AS PER PLAN	625 NO. 6 AWG 5000 V DISTRIBUTION CABLE	625 CONDUIT, 2", 725.04	625 LUMINAIRE, TWIN, POST TOP, AS PER PLAN	625 TRENCH IN PAVED AREA, TYPE A	625 TRENCH IN PAVED AREA, TYPE B	625 PULLBOX, 725.08, 24"	625 GROUND ROD	625 POWER SERVICE, AS PER PLAN	625 PLASTIC CAUTION TAPE		
						EACH	EACH	EACH	EACH	EACH	EACH	FT	FT	FT	FT	FT	EACH	EACH	EACH	EACH	
1	120	LT	WALNUT AVENUE	160+40	160+94								110		55					55	
2	120	LT	WALNUT AVENUE	160+94				1	3	1	1			2				1			
3	120	RT	WALNUT AVENUE	160+40	160+94								110		55					55	
4	120	RT	WALNUT AVENUE	160+94				1	3	1	1			2				1			
5	120	RT	WALNUT AVENUE	160+94	161+74							273	162		81					81	
6	120	LT	WALNUT AVENUE	161+09		1															
7	120	LT	WALNUT AVENUE	160+94	161+74							273	162		81					81	
8	120	LT	WALNUT AVENUE	161+74				1	3	1	1			2				1			
8A	120	LT	WALNUT AVENUE	161+74	161+79							45	10		5					5	
9	120	LT	WALNUT AVENUE	161+79													1				
10	120, 121	LT	WALNUT AVENUE	161+79	162+10							123	62		31					31	
11	120	RT	WALNUT AVENUE	161+74				1	3	1	1			2				1			
12	120	RT	WALNUT AVENUE	161+74	161+81							51	14		7					7	
13	120	RT	WALNUT AVENUE	161+81													1				
14	120, 121	RT	WALNUT AVENUE	161+81	162+09							117	58		29					29	
15	121	RT	WALNUT AVENUE	162+09													1				
16	121	LT	WALNUT AVENUE	162+10													1				
17	121	LT	WALNUT AVENUE	162+10	162+54							162	88		44					44	
18	121	RT	WALNUT AVENUE	162+09	162+54							165	90		45					45	
19	121	RT	WALNUT AVENUE	162+54	162+54							42	8		4					4	
20	121	LT/RT	WALNUT AVENUE	162+54	162+54							153	82			41				41	
21	121	LT	WALNUT AVENUE	162+54				1	3	1	1			2				1			
22	121	LT	WALNUT AVENUE	162+54	162+92								78		39					39	
23	121	RT	WALNUT AVENUE	162+52			1														
24	121	RT	WALNUT AVENUE	162+54													1				
25				NOT USED																	
26	121	RT	WALNUT AVENUE	162+59															1		
27	121	RT	WALNUT AVENUE	162+54	162+59							54	16		8					8	
28	121	RT	WALNUT AVENUE	162+54				1	3	1	1			2				1			
29	121	RT	WALNUT AVENUE	162+54									54		27					27	
30	123	LT	WALNUT AVENUE	176+11	176+12							51	14		7					7	
31	123	LT	WALNUT AVENUE	176+00	176+11							72	28		14					14	
32	123	LT/RT	WALNUT AVENUE	176+00	176+02							237	138			69				69	
33	123, 124	RT	WALNUT AVENUE	176+02	177+05							348	212		106					106	
34	124	RT	WALNUT AVENUE	177+03				1	3	1	1			2				1			
35	124	RT	WALNUT AVENUE	177+03	177+03							39	6		3					3	
36	124	RT	WALNUT AVENUE	177+03													1				
37	124	RT	WALNUT AVENUE	177+03	177+30								56		28					28	
38	124	RT	WALNUT AVENUE	177+03	177+03								26			13				13	
39	125	RT	WALNUT AVENUE	183+35	184+13								156		78					78	
40	125	RT	WALNUT AVENUE	184+13													1				
41	125	RT	WALNUT AVENUE	184+13	184+13							39	6		3					3	
42	125	RT	WALNUT AVENUE	184+13				1	3	1	1			2				1			
43	125	RT	WALNUT AVENUE	184+13	185+59							471	294		147					147	
44	125	RT	WALNUT AVENUE	185+37	185+59							183	102			51				51	
45	125	RT	WALNUT AVENUE	185+59													1				
46	125, 126	RT	WALNUT AVENUE	185+59	187+15							501	314		157					157	
47	126	LT	WALNUT AVENUE	187+80	187+82								42		21					21	
48	126	LT	WALNUT AVENUE	187+82													1				
49	126	LT	WALNUT AVENUE	187+73	187+82								24		12					12	
50	126	RT	WALNUT AVENUE	187+15													1				
51	126	RT	WALNUT AVENUE	187+15	187+15								26			13				13	
52	126	RT	WALNUT AVENUE	187+15				1	3	1	1			2				1			
53	126	RT	WALNUT AVENUE	187+15	187+15							45	10		5					5	
54	126	RT	WALNUT AVENUE	187+15	187+48								68		34					34	
55	126	LT	WALNUT AVENUE	187+82	188+38							192	108			54				54	
56	126	LT	WALNUT AVENUE	188+38													1				
57	126	LT/RT	WALNUT AVENUE	188+34	188+38							261	154			77				77	
58	126	RT	WALNUT AVENUE	188+34				1	3	1	1			2				1			
59	126	RT	WALNUT AVENUE	188+34	188+37							57	18		9					9	
TOTALS CARRIED TO GENERAL SUMMARY						1	1	10	30	10	10	3954	2906	20	1135	318	11	10	1	1453	

CALCULATED JMK
CHECKED WLC

LIGHTING ESTIMATED QUANTITIES

WALNUT & CHERRY
COMPLETE STREET
BIKE LANES

R:\Stark\SARTA\Task 3 Canton\STA\91592\lighting\sheets\91592LQ001.dgn 8/28/2012 2:57:27 PM bill

REFERENCE NO.	SHEET NO.	SIDE	ROADWAY	STATION TO STATION		625 CONNECTOR KIT, TYPE II EACH	625 CONNECTOR KIT, TYPE III EACH	625 LIGHT POLE, DECORATIVE, AS PER PLAN EACH	625 LIGHT POLE FOUNDATION, AS PER PLAN EACH	625 NO. 6 AWG 5000 V DISTRIBUTION CABLE FT	625 CONDUIT, 2", 725.04 FT	625 LUMINAIRE, TWIN, POST TOP, AS PER PLAN FT	625 TRENCH IN PAVED AREA, TYPE A FT	625 TRENCH IN PAVED AREA, TYPE B FT	625 PULLBOX, 725.08, 24" EACH	625 GROUND ROD EACH	625 POWER SERVICE, AS PER PLAN EACH	625 PLASTIC CAUTION TAPE EACH	625 LIGHT POLE REMOVED FOR STORAGE, AS PER PLAN EACH	625 LUMINAIRE REMOVED FOR STORAGE, AS PER PLAN EACH		
60	126	RT	WALNUT AVENUE	188+34											1							
61	126	RT	WALNUT AVENUE	188+34	188+34						48		24					24				
62	126	RT	WALNUT AVENUE	188+25	188+34						20		10					10				
63	126	RT	WALNUT AVENUE	188+34	189+55					405	250		125					125				
64	126	RT	WALNUT AVENUE	189+55													1					
65	126	RT	WALNUT AVENUE	189+55	190+40					285	170		85					85				
66	126	RT	WALNUT AVENUE	190+34											1							
67	126	RT	WALNUT AVENUE	190+34	190+40					57	18		9					9				
68	126	RT	WALNUT AVENUE	190+40											1							
69	126	RT	WALNUT AVENUE	190+40	190+40						4		2					2				
70	126	RT	WALNUT AVENUE	190+40	190+91					183	102			51				51				
71	126	RT	WALNUT AVENUE	190+34															1	1		
72	126	RT	WALNUT AVENUE	190+34	190+35					66	24		12					12				
73	126	RT	WALNUT AVENUE	190+35		1	3	1	1			2				1						
74	126	LT/RT	WALNUT AVENUE	190+40	190+47					273	162			81				81				
75	126	LT	WALNUT AVENUE	190+35		1	3	1	1			2				1						
76	126	LT	WALNUT AVENUE	190+35	190+47					69	26		13					13				
77	126	LT	WALNUT AVENUE	190+47											1							
78	126	LT	WALNUT AVENUE	190+47	190+47						8		4					4				
79	126	LT	WALNUT AVENUE	190+47	190+49						6		3					3				
80	126	RT	WALNUT AVENUE	190+91	190+91						6		3					3				
81	126	RT	WALNUT AVENUE	190+91											1							
82	126	RT	WALNUT AVENUE	190+85	190+91					87	38		19					19				
83	126	RT	WALNUT AVENUE	190+85		1	3	1	1			2				1						
84	126	RT	WALNUT AVENUE	191+72											1							
85	126	RT	WALNUT AVENUE	191+72													1					
86	126	RT	WALNUT AVENUE	190+91	191+72					273	162		81					81				
87	126	RT	WALNUT AVENUE	191+72	191+72					57	18		9					9				
88	126	RT	WALNUT AVENUE	191+72															1	1		
89	126	RT	WALNUT AVENUE	190+91	190+91						64		32					32				
90	126	RT	WALNUT AVENUE	191+72	191+81					66	24		12					12				
91	126	RT	WALNUT AVENUE	191+81											1							
92	126	RT	WALNUT AVENUE	191+81	191+90					60	20		10					10				
93	126	RT	WALNUT AVENUE	191+90		1	3	1	1			2				1						
94	126, 127	RT	WALNUT AVENUE	191+81	192+93					366	224		112					112				
95	127	LT	WALNUT AVENUE	193+00	193+51					189	106			53				53				
96	127	LT	WALNUT AVENUE	193+00	193+00						8		4					4				
97	127	LT	WALNUT AVENUE	193+00											1							
98	127	LT	WALNUT AVENUE	193+05		1	3	1	1			2				1						
99	127	LT	WALNUT AVENUE	192+93	193+00					102	48		24					24				
100	127	LT	WALNUT AVENUE	192+93	193+05					72	28		14					14				
101	127	LT	WALNUT AVENUE	192+93											1							
102	127	LT	WALNUT AVENUE	192+93															1	1		
103	127	LT/RT	WALNUT AVENUE	192+92	192+93					192	108			54				54				
104	127	RT	WALNUT AVENUE	192+93											1							
105	127	RT	WALNUT AVENUE	192+93	193+00					66	24		12					12				
106	127	RT	WALNUT AVENUE	193+00		1	3	1	1			2				1						
107	127	RT	WALNUT AVENUE	193+00	193+00						30		15					15				
108	127	RT	WALNUT AVENUE	192+93	193+52					216	124			62				62				
109	127	LT	WALNUT AVENUE	194+53															1	1		
110	127	LT	WALNUT AVENUE	193+51	193+51						30		15					15				
111	127	LT	WALNUT AVENUE	193+51											1							
112	127	LT	WALNUT AVENUE	193+51	193+59					69	26		13					13				
113	127	LT	WALNUT AVENUE	193+56		1	3	1	1			2				1						
114	127	LT	WALNUT AVENUE	193+56	193+59					51	14		7					7				
115	127	LT	WALNUT AVENUE	193+59											1							
116	127	LT/RT	WALNUT AVENUE	194+53	194+58					168	92			46				46				
117	127	LT	WALNUT AVENUE	194+53											1							
118	127	LT	WALNUT AVENUE	194+53	194+58					45	10		5					5				
119	127	LT	WALNUT AVENUE	194+58		1	3	1	1			2				1						
TOTALS CARRIED TO GENERAL SUMMARY						8	24	8	8	3417	2042	16	674	347	13	8	2	1021	4	4		

CALCULATED JMK
CHECKED WLC

LIGHTING ESTIMATED QUANTITIES

WALNUT & CHERRY
COMPLETE STREET
BIKE LANES

R:\Stark\SARTA\Task 3 Canton\STA\91592\lighting\sheets\91592LQ002.dgn 8/28/2012 2:57:58 PM bill

REFERENCE NO.	SHEET NO.	SIDE	ROADWAY	STATION TO STATION		625 CONNECTOR KIT, TYPE II EACH	625 CONNECTOR KIT, TYPE III EACH	625 LIGHT POLE, DECORATIVE, AS PER PLAN EACH	625 LIGHT POLE FOUNDATION, AS PER PLAN EACH	625 NO. 6 AWG 5000 V DISTRIBUTION CABLE FT	625 CONDUIT, 2", 725.04 FT	625 LUMINAIRE, TWIN, POST TOP, AS PER PLAN FT	625 TRENCH IN PAVED AREA, TYPE A FT	625 TRENCH IN PAVED AREA, TYPE B FT	625 PULLBOX, 725.08, 24" EACH	625 GROUND ROD EACH	625 POWER SERVICE, AS PER PLAN EACH	625 PLASTIC CAUTION TAPE EACH	625 LIGHT POLE REMOVED FOR STORAGE, AS PER PLAN EACH	625 LUMINAIRE REMOVED FOR STORAGE, AS PER PLAN EACH		
120	127	RT	WALNUT AVENUE	194+58											1							
121	127	RT	WALNUT AVENUE	194+58	194+58					45	10		5					5				
122	127	RT	WALNUT AVENUE	194+58		1	3	1	1			2				1						
123	127	RT	WALNUT AVENUE	194+58	194+63					54	16		8					8				
124	127	RT	WALNUT AVENUE	194+63													1					
125	127	RT	WALNUT AVENUE	194+03	194+58					198	112		56					56				
126	127	RT	WALNUT AVENUE	193+52	194+63					363	222		111					111				
127	127	RT	WALNUT AVENUE	194+03		1	3	1	1			2				1						
128	127	RT	WALNUT AVENUE	193+56		1	3	1	1			2				1						
129	127	RT	WALNUT AVENUE	193+52	193+56					54	16		8					8				
130	127	RT	WALNUT AVENUE	193+52											1							
131	127	RT	WALNUT AVENUE	193+52	193+52						16		8					8				
132	127	RT	WALNUT AVENUE	194+63	194+63					84	36		18					18				
133	127	RT	WALNUT AVENUE	194+63											1							
134	127	RT	WALNUT AVENUE	195+61		1	3	1	1			2				1						
135	127	RT	WALNUT AVENUE	195+55	195+61					69	26		13					13				
136	127	RT	WALNUT AVENUE	194+63	195+57					312	188		94					94				
137	127	RT	WALNUT AVENUE	195+55															1	1		
138	127	RT	WALNUT AVENUE	195+55											1							
139	127	RT	WALNUT AVENUE	195+55	195+57					54	16		8					8				
140	127	RT	WALNUT AVENUE	195+57											1							
141	127	RT	WALNUT AVENUE	195+57	195+57						8		4					4				
142	127	LT	WALNUT AVENUE	195+61	195+61						36		18					18				
143	127	LT	WALNUT AVENUE	195+61		1	3	1	1			2				1						
144	127	LT	WALNUT AVENUE	195+53	195+61					60	20		10					10				
145	127	LT	WALNUT AVENUE	195+53											1							
146	127	LT/RT	WALNUT AVENUE	195+53	195+55					219	126			63				63				
147	127	RT	WALNUT AVENUE	195+55	196+06					183	102			51				51				
148	127	RT	WALNUT AVENUE	196+06											1							
149	127	RT	WALNUT AVENUE	196+06		1	3	1	1			2				1						
150	127	RT	WALNUT AVENUE	196+06	196+26					93	42		21					21				
151	127	RT	WALNUT AVENUE	196+06	196+26					99	46		23					23				
152	127	RT	WALNUT AVENUE	196+26															1	2		
153	127	RT	WALNUT AVENUE	196+26											1							
154	128	LT	WALNUT AVENUE	198+18	198+18						36		18					18				
155	128	LT	WALNUT AVENUE	198+18		1	3	1	1			2				1						
156	128	LT	WALNUT AVENUE	198+16	198+18					54	16		8					8				
157	128	LT	WALNUT AVENUE	198+16											1							
158	128	LT	WALNUT AVENUE	198+16															1	1		
159	128	LT	WALNUT AVENUE	198+10	198+16						12		6					6				
160	128	LT	WALNUT AVENUE	198+16	198+81					228	132			66				66				
161	128	LT	WALNUT AVENUE	198+74	198+74						36		18					18				
162	128	LT	WALNUT AVENUE	198+74		1	3	1	1			2				1						
163	128	LT	WALNUT AVENUE	198+74	198+81					63	22		11					11				
164	128	LT	WALNUT AVENUE	198+74															1	2		
165	128	LT	WALNUT AVENUE	198+81											1							
166	128	LT	WALNUT AVENUE	198+81	198+85						8		4					4				
167	128	LT/RT	WALNUT AVENUE	198+73	198+81					240	140			70				70				
168	128	RT	WALNUT AVENUE	198+73	200+77						408		204					204				
169	128	RT	WALNUT AVENUE	198+78		1	3	1	1			2				1						
170	128	RT	WALNUT AVENUE	198+73	198+78					57	18		9					9				
171	128	RT	WALNUT AVENUE	198+73											1							
172	128	RT	WALNUT AVENUE	198+73	198+73						12		6					6				
173	128	RT	WALNUT AVENUE	198+58	198+73						30		15					15				
174	128	LT	WALNUT AVENUE	200+89											1							
175	128	LT	WALNUT AVENUE	200+89															1	2		
176	128	LT	WALNUT AVENUE	200+78	200+89					75	30		15					15				
177	128	LT	WALNUT AVENUE	200+78		1	3	1	1			2				1						
178	129	RT	WALNUT AVENUE	204+20		1	3	1	1			2				1						
179	129	RT	WALNUT AVENUE	204+13	204+20					66	24		12					12				
TOTALS CARRIED TO GENERAL SUMMARY						11	33	11	11	2670	1962	22	731	250	12	11	1	981	5	8		

CALCULATED JMK
CHECKED WLC

LIGHTING ESTIMATED QUANTITIES

WALNUT & CHERRY
COMPLETE STREET
BIKE LANES

R:\Stark\SARTA\Task 3 Canton\STA\91592\lighting\sheets\91592LQ003.dgn 8/28/2012 2:56:31 PM bill

REFERENCE NO.	SHEET NO.	SIDE	ROADWAY	STATION TO STATION		625 CONNECTOR KIT, TYPE II EACH	625 CONNECTOR KIT, TYPE III EACH	625 LIGHT POLE, DECORATIVE, AS PER PLAN EACH	625 LIGHT POLE FOUNDATION, AS PER PLAN EACH	625 NO. 6 AWG 5000 V DISTRIBUTION CABLE FT	625 CONDUIT, 2", 725.04 FT	625 LUMINAIRE, TWIN, POST TOP, AS PER PLAN FT	625 TRENCH IN PAVED AREA, TYPE A FT	625 TRENCH IN PAVED AREA, TYPE B FT	625 PULLBOX, 725.08, 24" EACH	625 GROUND ROD EACH	625 POWER SERVICE, AS PER PLAN EACH	625 PLASTIC CAUTION TAPE EACH	625 LIGHT POLE REMOVED FOR STORAGE, AS PER PLAN EACH	625 LUMINAIRE REMOVED FOR STORAGE, AS PER PLAN EACH		
180	129	RT	WALNUT AVENUE	204+13											1							
181	129	RT	WALNUT AVENUE	204+13	204+13						16		8					8				
182	129	RT	WALNUT AVENUE	203+97	204+13						32		16					16				
183	129	RT	WALNUT AVENUE	206+13	206+15					42	8		4					4				
184	129	RT	WALNUT AVENUE	206+13		1	3	1	1			2				1						
185	129	RT	WALNUT AVENUE	206+15															1	1		
186	129	RT	WALNUT AVENUE	206+15											1							
187	129	RT	WALNUT AVENUE	206+15	206+21					66	24		12					12				
188	129	RT	WALNUT AVENUE	206+21											1							
189	129	RT	WALNUT AVENUE	206+21	206+21						8		4					4				
190	129	LT	WALNUT AVENUE	206+87											1							
191	129	LT	WALNUT AVENUE	206+87	206+93					48	12		6					6				
192	129	LT	WALNUT AVENUE	206+93		1	3	1	1			2				1						
193	129	LT/RT	WALNUT AVENUE	206+76	206+87					183	102			51				51				
194	129	RT	WALNUT AVENUE	206+76											1							
195	129	RT	WALNUT AVENUE	206+21	206+76					195	110			55				55				
196	131	RT	CHERRY AVENUE	134+62	135+12						100		50					50				
197	131	RT	CHERRY AVENUE	135+12		1	3	1	1			2				1						
198	131	RT	CHERRY AVENUE	135+12	135+12					54	16		8					8				
199	131	RT	CHERRY AVENUE	135+12											1							
200	131	RT	CHERRY AVENUE	135+12	135+31					87	38		19					19				
201	131	RT	CHERRY AVENUE	135+31															1	1		
202	131	RT	CHERRY AVENUE	135+31											1							
203				NOT USED																		
204	131	RT	CHERRY AVENUE	135+31													1					
205	131	RT	CHERRY AVENUE	139+83	140+33						100		50					50				
206	131	RT	CHERRY AVENUE	140+33		1	3	1	1			2				1						
207	131	RT	CHERRY AVENUE	140+33	140+33					54	16		8					8				
208	131	RT	CHERRY AVENUE	140+33											1							
209	131	RT	CHERRY AVENUE	140+33	140+45					66	24		12					12				
210	131	RT	CHERRY AVENUE	140+45															1	1		
211	131	RT	CHERRY AVENUE	140+45											1							
212	131	RT	CHERRY AVENUE	140+45													1					
213				NOT USED																		
214	131	RT	CHERRY AVENUE	150+22	150+73						102		51					51				
215	131	RT	CHERRY AVENUE	150+73													1					
216	131	RT	CHERRY AVENUE	150+73	150+80					51	14		7					7				
217	131	RT	CHERRY AVENUE	150+73		1	3	1	1			2				1						
218	131	RT	CHERRY AVENUE	150+73	150+80					57	18		9					9				
219	131	RT	CHERRY AVENUE	151+01	153+06						410		205					205				
220	131	RT	CHERRY AVENUE	151+01											1							
221	131	RT	CHERRY AVENUE	150+80	151+01					93	42		21					21				
222	131	RT	CHERRY AVENUE	150+80											1							
223	131	RT	CHERRY AVENUE	155+33		1	3	1	1			2				1						
224	131	RT	CHERRY AVENUE	155+33	155+33					48	12		6					6				
225	131	RT	CHERRY AVENUE	154+47	155+33						172		86					86				
226	131	RT	CHERRY AVENUE	155+33											1							
227	132	RT	CHERRY AVENUE	169+08		1	3	1	1			2				1						
228	132	RT	CHERRY AVENUE	168+58	169+08						100		50					50				
229	132	RT	CHERRY AVENUE	169+08	169+08					39	6		3					3				
230	132	RT	CHERRY AVENUE	169+08											1							
231	132	RT	CHERRY AVENUE	169+08	169+45						74		37					37				
232	132	RT	CHERRY AVENUE	169+45											1							
233	132	RT	CHERRY AVENUE	169+45	169+48						6		3					3				
TOTALS CARRIED TO GENERAL SUMMARY						7	21	7	7	1083	1562	14	675	106	14	7	3	781	3	3		

CALCULATED JMK
CHECKED WLC

LIGHTING ESTIMATED QUANTITIES

WALNUT & CHERRY COMPLETE STREET BIKE LANES

R:\Stark\SARTA\Task 3 Canton\STA\91592\lighting\sheets\91592LQ004.dgn 8/28/2012 2:59:06 PM bill

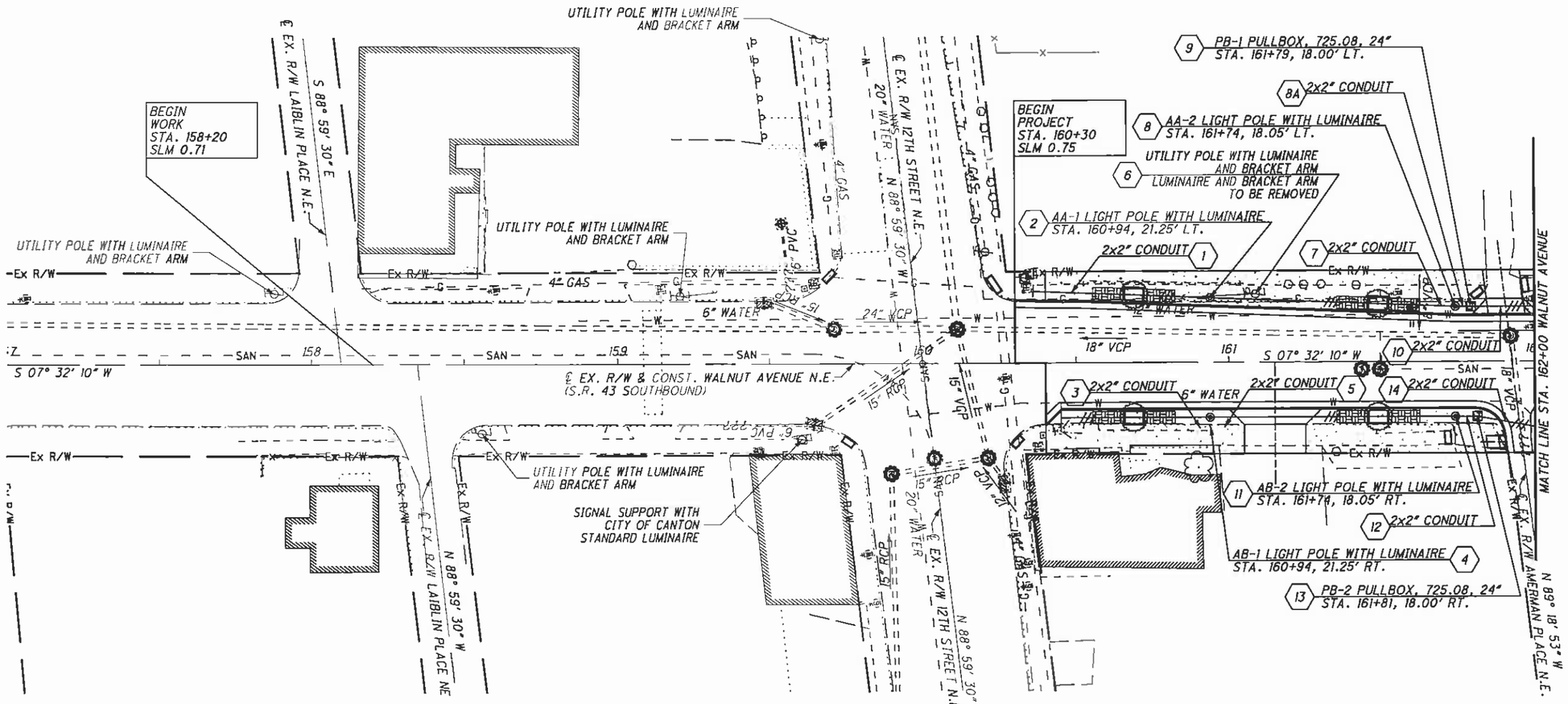

LEGEND

- NOSTALGIA PEDESTAL WITH LUMINAIRE
- CONDUIT & CABLE
- EXISTING LIGHT POLE AND LUMINAIRE
- PROPOSED PULLBOX, 725.08 (SIZE AS DIMENSIONED)
- CIRCUIT STUB AND CAP
- ELECTRICAL/LIGHTING PANEL ENCLOSURE

CROSS REFERENCE	
SHEET	DESCRIPTION
117-119	LIGHTING QUANTITIES

HORIZONTAL SCALE IN FEET 0 10 20 40

CALCULATED JMK
CHECKED WLC

LIGHTING PLAN - WALNUT AVENUE STA. 157+00 TO STA. 162+00

WALNUT & CHERRY COMPLETE STREET BIKE LANES

R:\Stark\SARTA\Task 3 Canton\STA\91592\lighting\sheets\91592LP001.dgn 6/28/2012 9:28:18 AM jroth

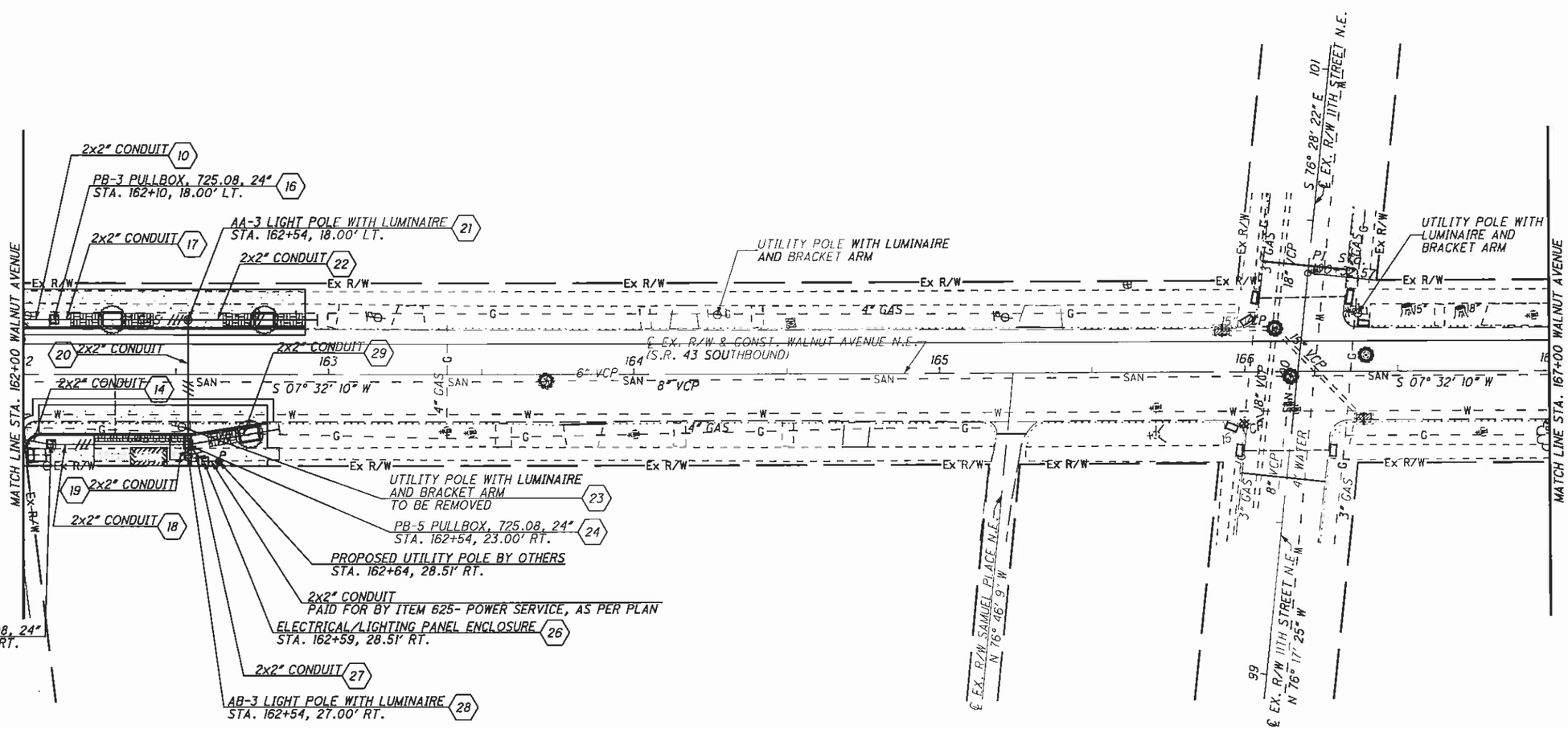

CROSS REFERENCE	
SHEET	DESCRIPTION
120	LEGEND
117-119	LIGHTING QUANTITIES

R:\Stark\SARTA\Task 3 Canton\STA\91592\lighting\sheets\91592LP002.dgn 6/28/2012 9:28:41 AM jroth

HORIZONTAL SCALE IN FEET 0 10 20 40

CALCULATED JMK
CHECKED WLC

LIGHTING PLAN - WALNUT AVENUE STA. 162+00 TO STA. 167+00

WALNUT & CHERRY COMPLETE STREET BIKE LANES

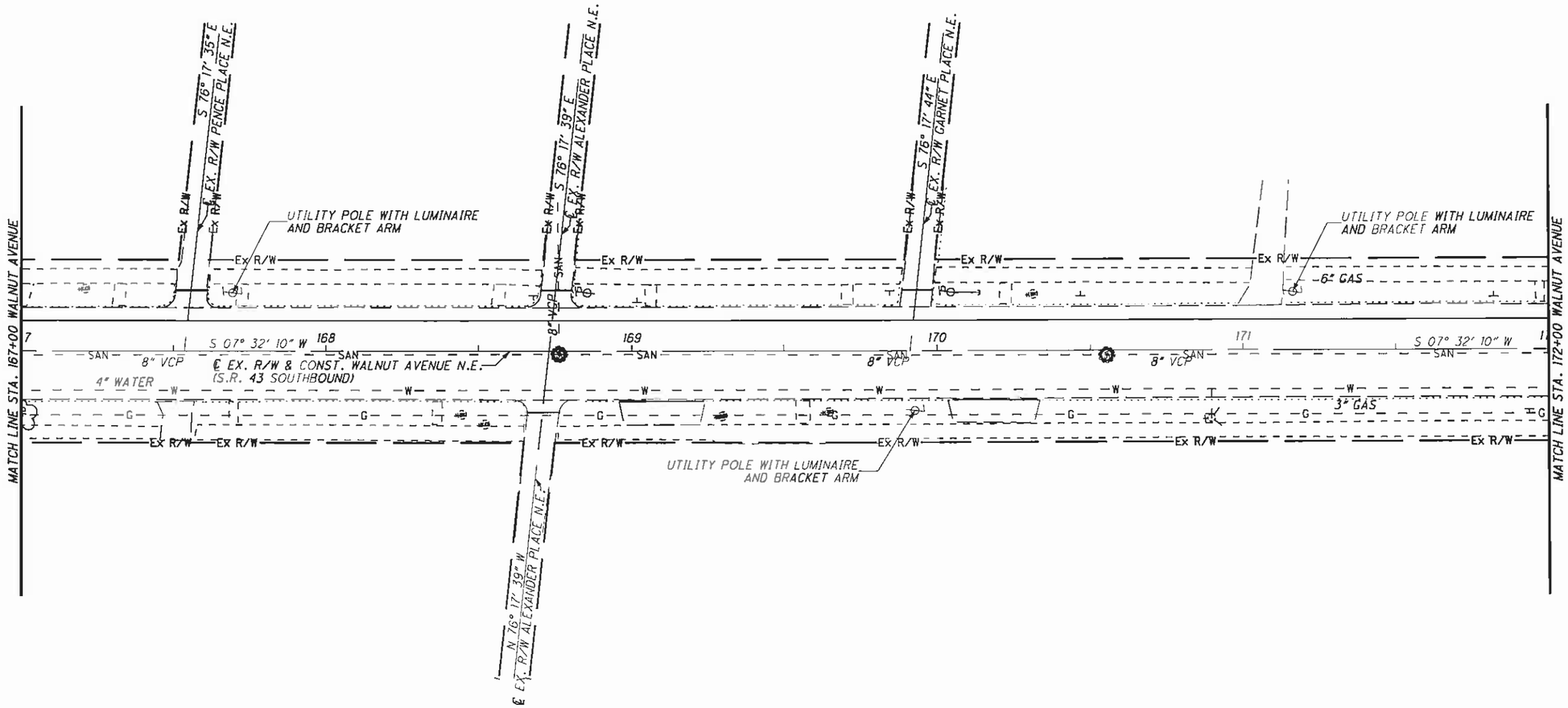

CROSS REFERENCE	
SHEET	DESCRIPTION
120	LEGEND
117-119	LIGHTING QUANTITIES

HORIZONTAL SCALE IN FEET 0 10 20 40

CALCULATED JMK
CHECKED WLC

LIGHTING PLAN - WALNUT AVENUE
STA. 167+00 TO STA. 172+00

WALNUT & CHERRY COMPLETE STREET BIKE LANES

R:\Stark\SART\Task 3 Canton\STA\91592\lighting\sheets\91592LP003.dgn 6/28/2012 9:29:36 AM jroth

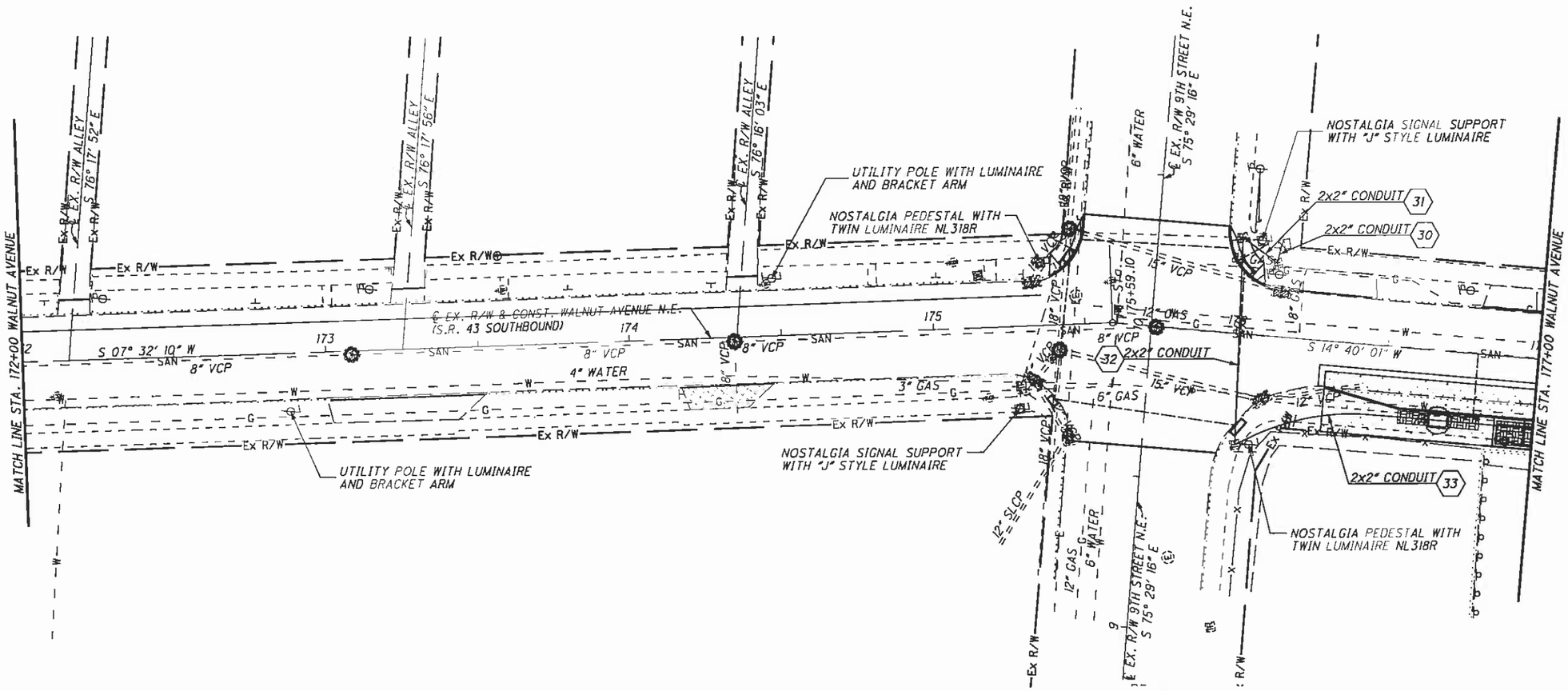

CROSS REFERENCE	
SHEET	DESCRIPTION
120	LEGEND
117-119	LIGHTING QUANTITIES

R:\Stark\SARTA\Task 3 Canton\STA\91592\lighting\sheets\91592LP004.dgn 6/28/2012 9:30:02 AM jroth

CALCULATED JMK
CHECKED WLC

HORIZONTAL SCALE IN FEET 0 10 20 40

LIGHTING PLAN - WALNUT AVENUE STA. 172+00 TO STA. 177+00

WALNUT & CHERRY COMPLETE STREET BIKE LANES

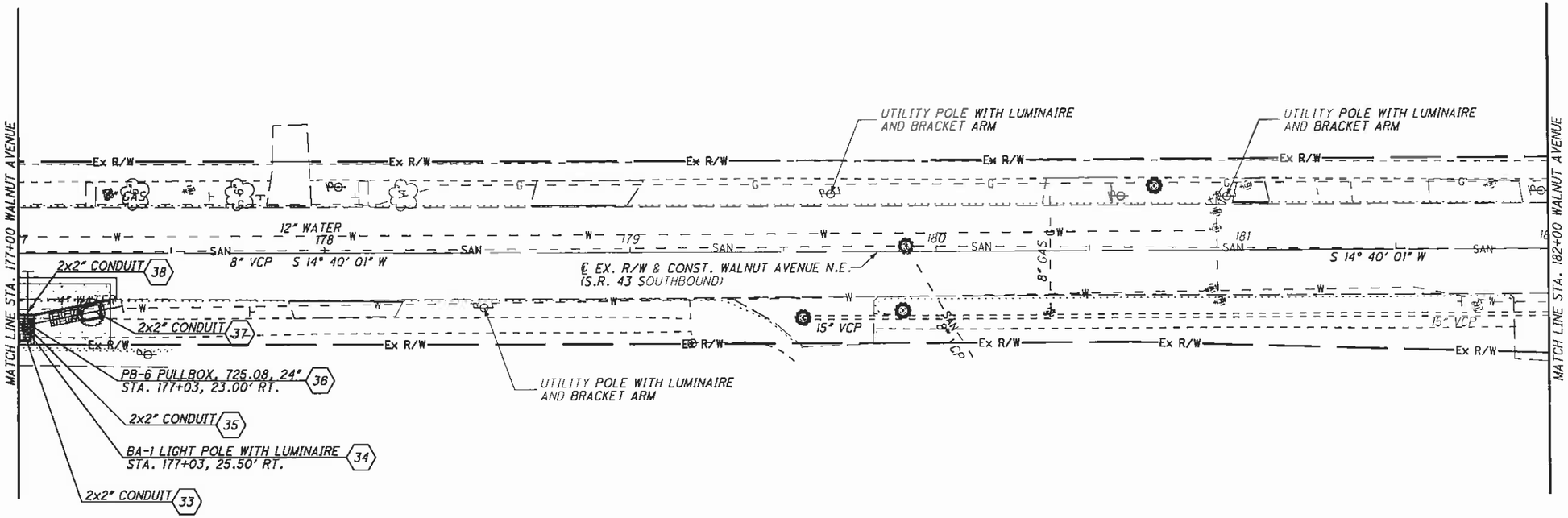

CROSS REFERENCE	
SHEET	DESCRIPTION
120	LEGEND
117-119	LIGHTING QUANTITIES

HORIZONTAL SCALE IN FEET 0 10 20 40

CALCULATED JMK
CHECKED WLC

LIGHTING PLAN - WALNUT AVENUE
STA. 177+00 TO STA. 182+00

WALNUT & CHERRY COMPLETE STREET BIKE LANES

R:\Stark\SARTA\Task 3 Canton\STA\91592\lighting\sheets\91592LP005.dgn 6/28/2012 9:30:46 AM jroth

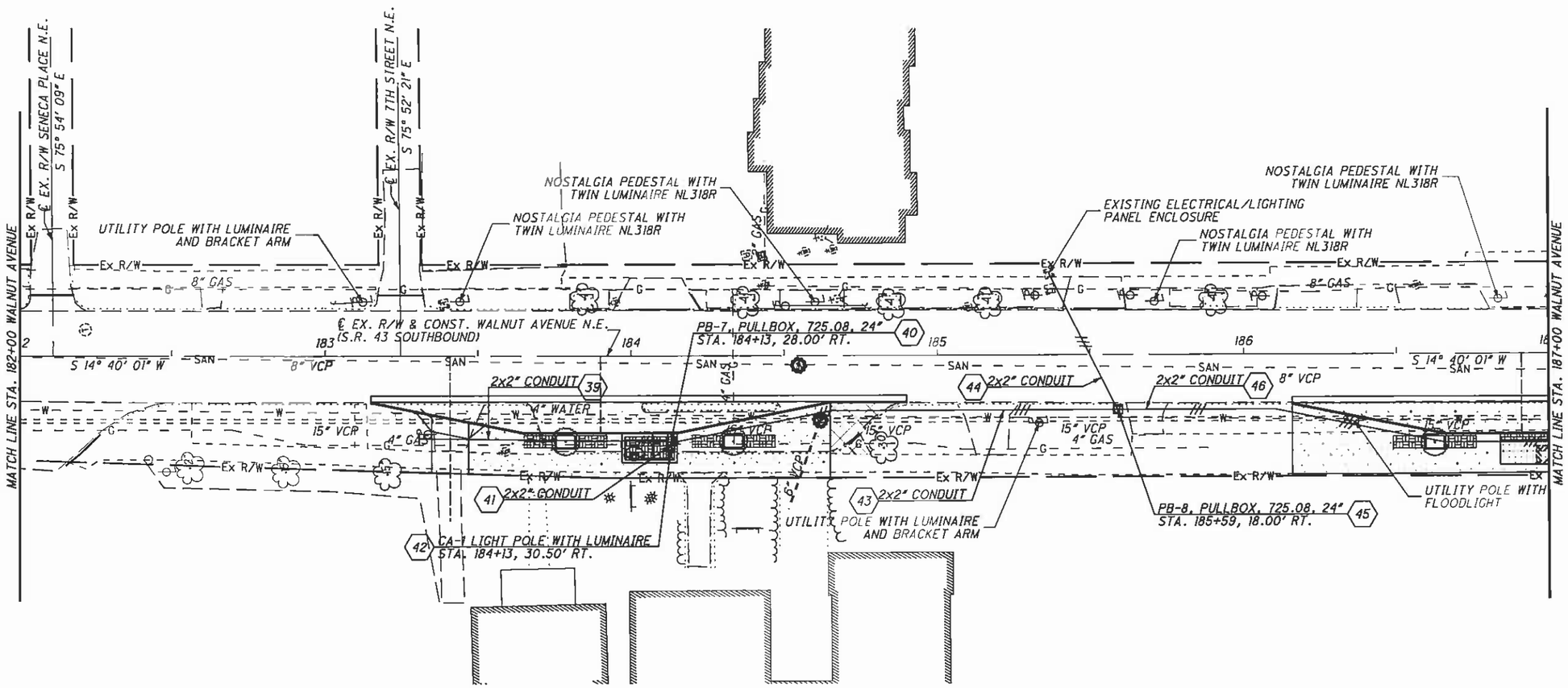

CROSS REFERENCE	
SHEET	DESCRIPTION
120	LEGEND
117-119	LIGHTING QUANTITIES

HORIZONTAL SCALE IN FEET 0 10 20 40

CALCULATED JMK
CHECKED WLC

LIGHTING PLAN - WALNUT AVENUE
STA. 182+00 TO STA. 187+00

WALNUT & CHERRY COMPLETE STREET BIKE LANES

R:\Stark\SARTA\Task 3 Canton\STA\91592\lighting\sheets\91592LP006.dgn 6/28/2012 9:31:08 AM jroth

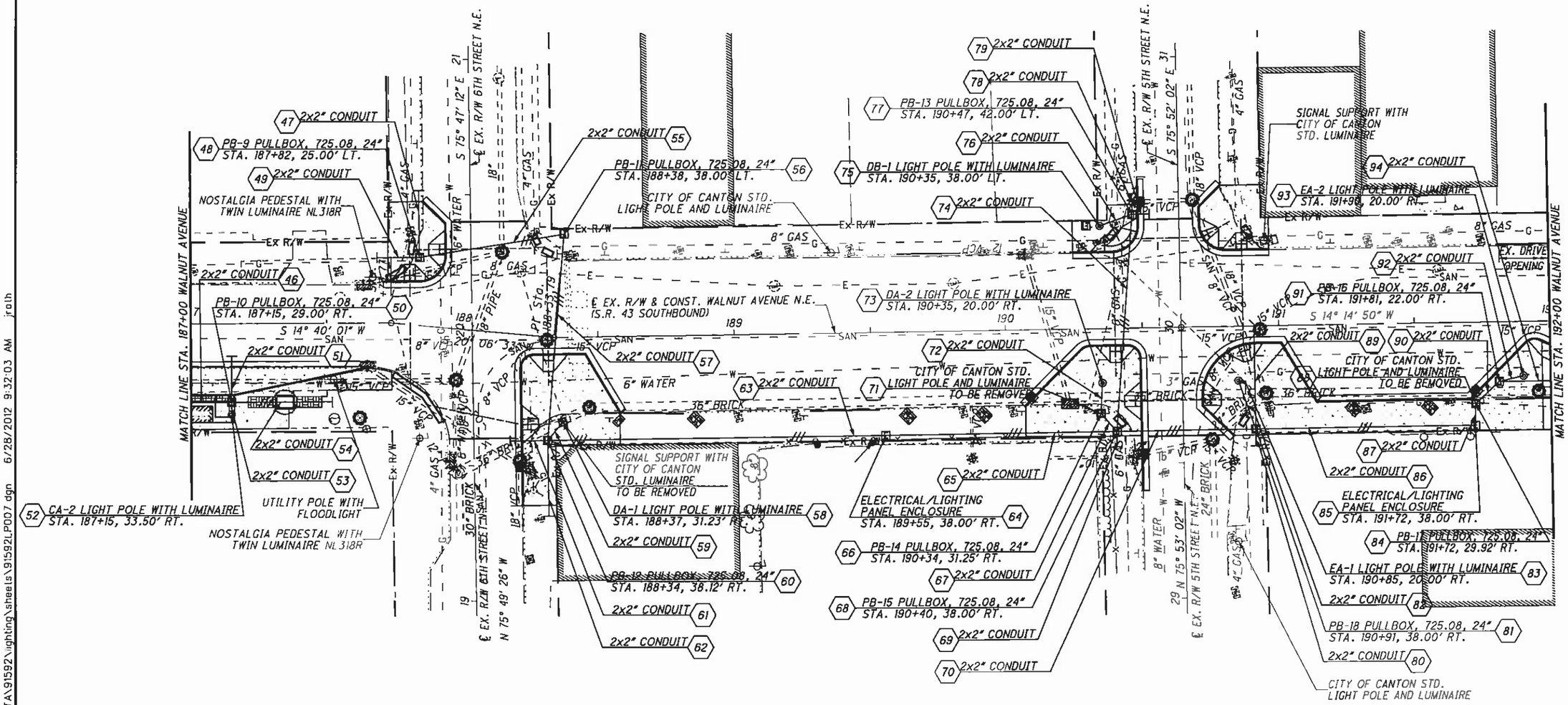

CROSS REFERENCE	
SHEET	DESCRIPTION
120	LEGEND
117-119	LIGHTING QUANTITIES

HORIZONTAL SCALE IN FEET 0 10 20 40

CALCULATED JMK
CHECKED WLC

LIGHTING PLAN - WALNUT AVENUE STA. 187+00 TO STA. 192+00

WALNUT & CHERRY COMPLETE STREET BIKE LANES

R:\Stark\SART\Task 3 Canton\STA91592\lighting\sheets\91592LP007.dgn 6/28/2012 9:32:03 AM jrolh

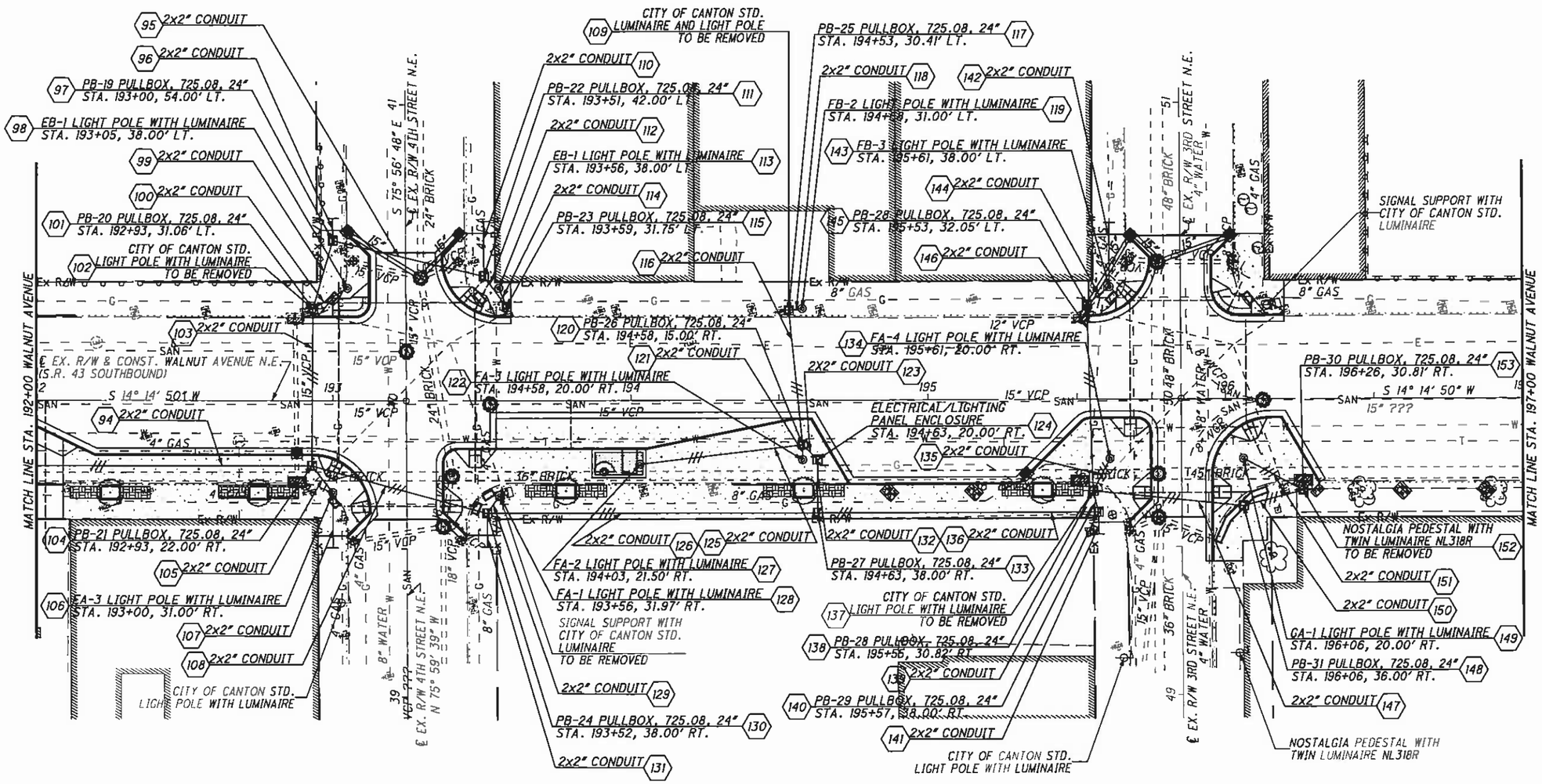

CROSS REFERENCE	
SHEET	DESCRIPTION
120	LEGEND
117-119	LIGHTING QUANTITIES

HORIZONTAL SCALE IN FEET 0 10 20 40

CALCULATED JMK
CHECKED WLC

LIGHTING PLAN - WALNUT AVENUE STA. 192+00 TO STA. 197+00

WALNUT & CHERRY COMPLETE STREET BIKE LANES

R:\Stark\SARTA\Task 3 Canton\STA\91592\lighting\sheets\91592LP008.dgn 6/28/2012 1:19:03 PM jroth

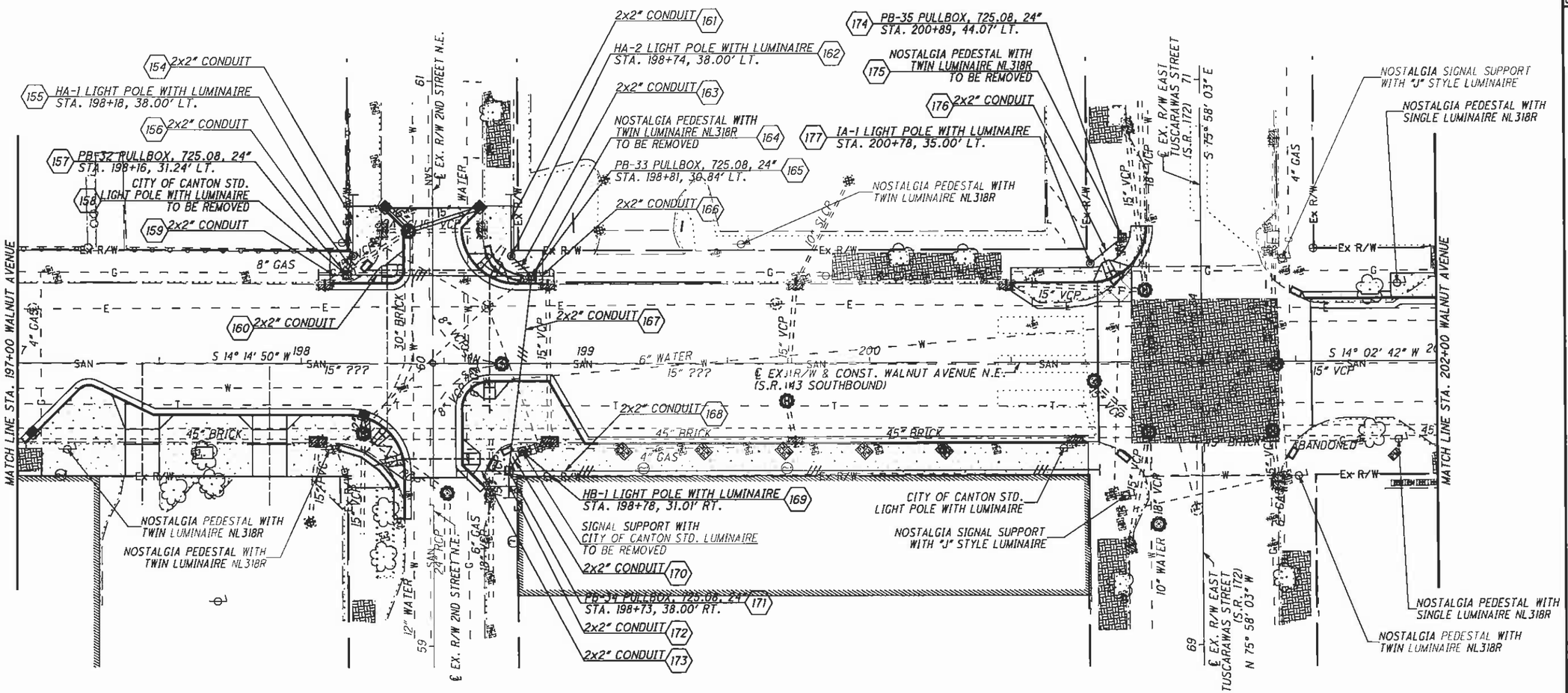

CROSS REFERENCE	
SHEET	DESCRIPTION
120	LEGEND
117-119	LIGHTING QUANTITIES

R:\Stark\SART\Task 3 Canton\STA\91592\lighting\sheets\91592LP009.dgn 6/28/2012 1:19 29 PM jroth

CALCULATED 0 10 20 40 HORIZONTAL SCALE IN FEET

CHECKED WLC

LIGHTING PLAN - WALNUT AVENUE STA. 197+00 TO STA. 202+00

WALNUT & CHERRY COMPLETE STREET BIKE LANES

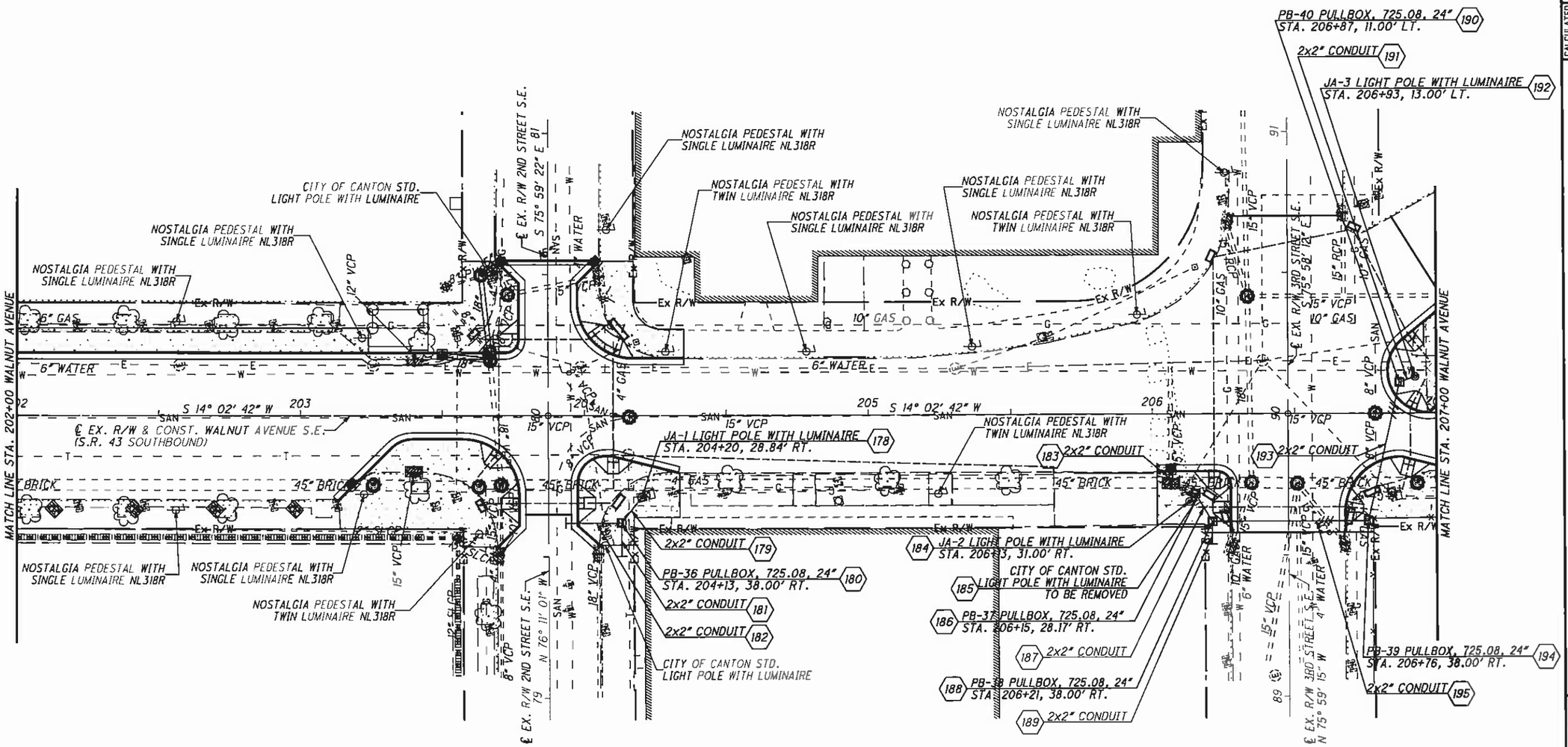

CROSS REFERENCE	
SHEET	DESCRIPTION
120	LEGEND
117-119	LIGHTING QUANTITIES

R:\Stark\SARTA\Task 3 Canton\STA\91592\lighting\sheets\91592LP010.dgn 6/28/2012 1:20:18 PM jroth

HORIZONTAL SCALE IN FEET 0 10 20 40

CALCULATED JMK
CHECKED WLC

LIGHTING PLAN - WALNUT AVENUE STA. 202+00 TO STA. 207+00

WALNUT & CHERRY COMPLETE STREET BIKE LANES

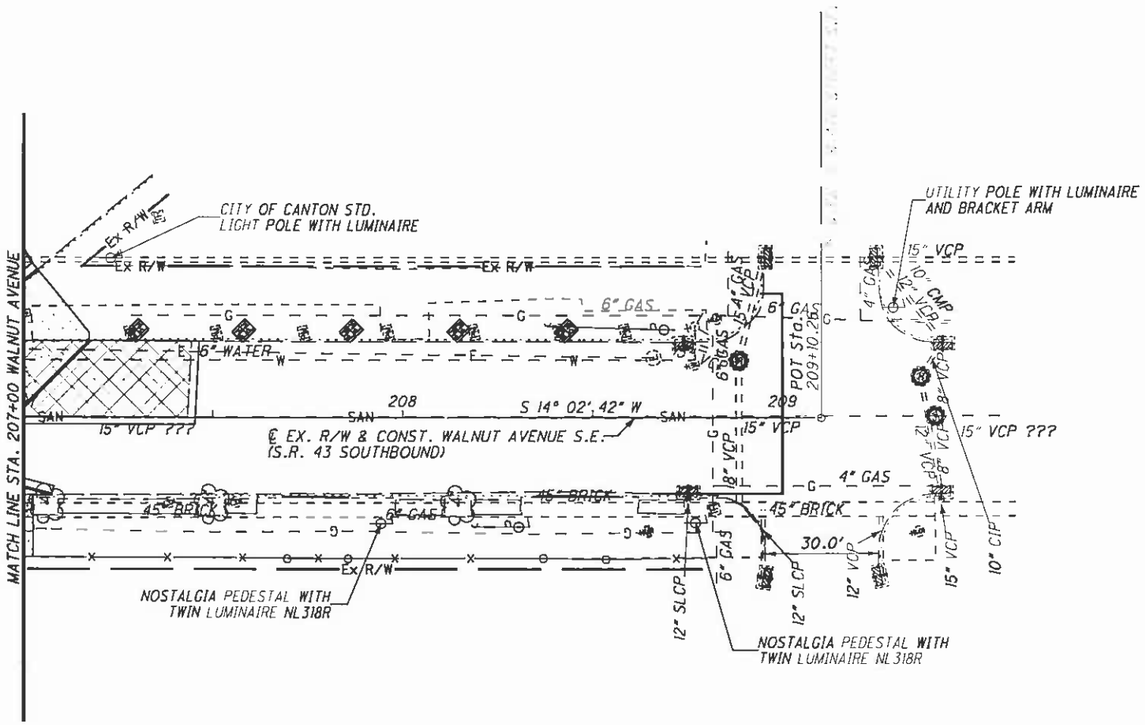

CROSS REFERENCE	
SHEET	DESCRIPTION
120	LEGEND
117-119	LIGHTING QUANTITIES

R:\Stark\SARTA\Task 3 Canton\STA\91592\lighting\sheets\91592LP011.dgn 6/28/2012 1:20:56 PM jroth

HORIZONTAL SCALE IN FEET 0

CALCULATED JMK
CHECKED WLC

LIGHTING PLAN - WALNUT AVENUE
STA. 207+00 TO STA. 209+10.26

WALNUT & CHERRY COMPLETE STREET BIKE LANES

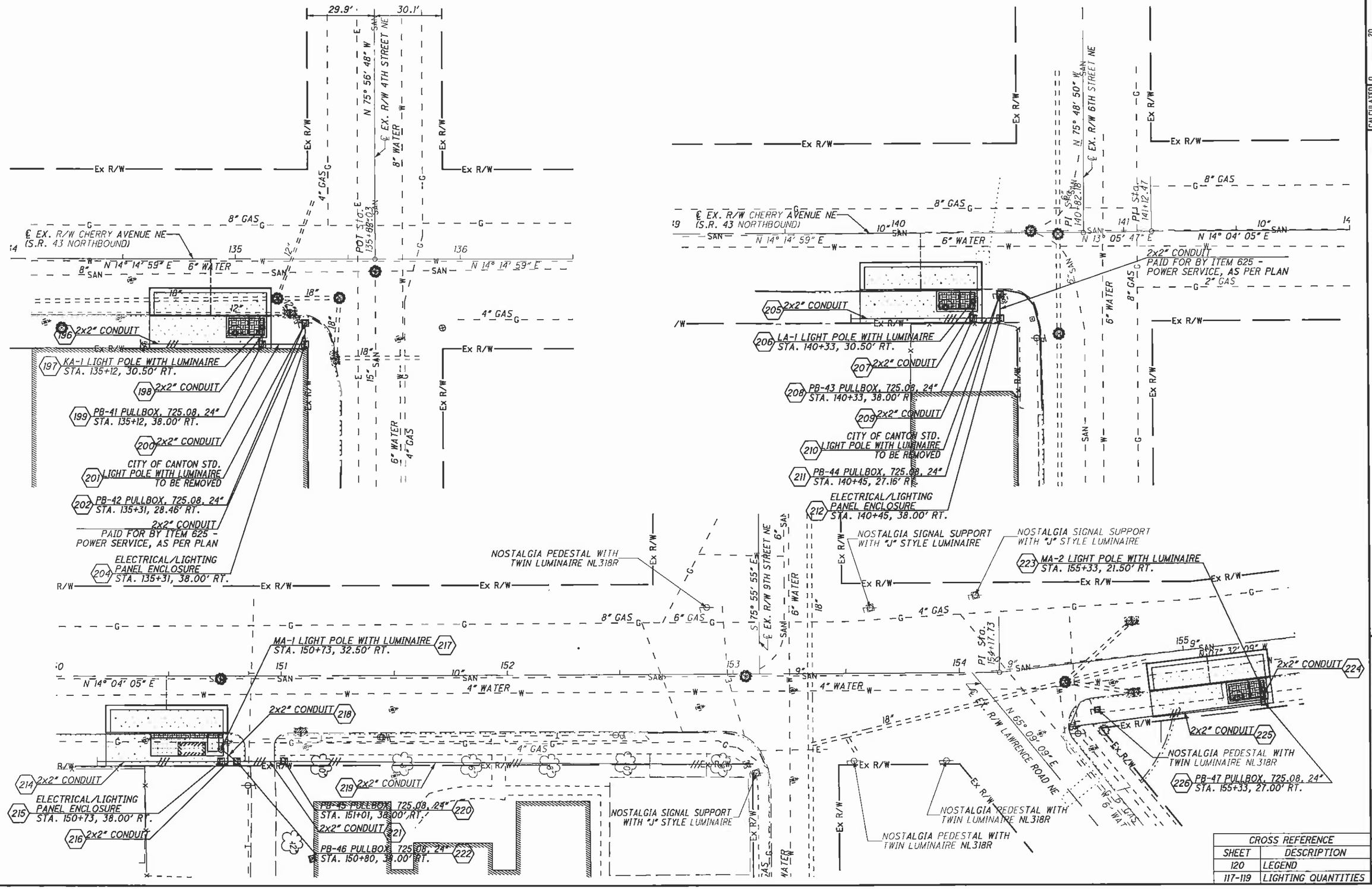

CROSS REFERENCE	
SHEET	DESCRIPTION
120	LEGEND
117-119	LIGHTING QUANTITIES

CALCULATED JMK
CHECKED WLC

LIGHTING PLAN - CHERRY AVENUE BUS SHELTER/STOP LOCATIONS

WALNUT & CHERRY COMPLETE STREET BIKE LANES

R:\Stark\SARTA\Task 3 Canton\STA\91592\lighting\sheets\91592LP012.dgn 6/28/2012 1:21:49 PM jroth

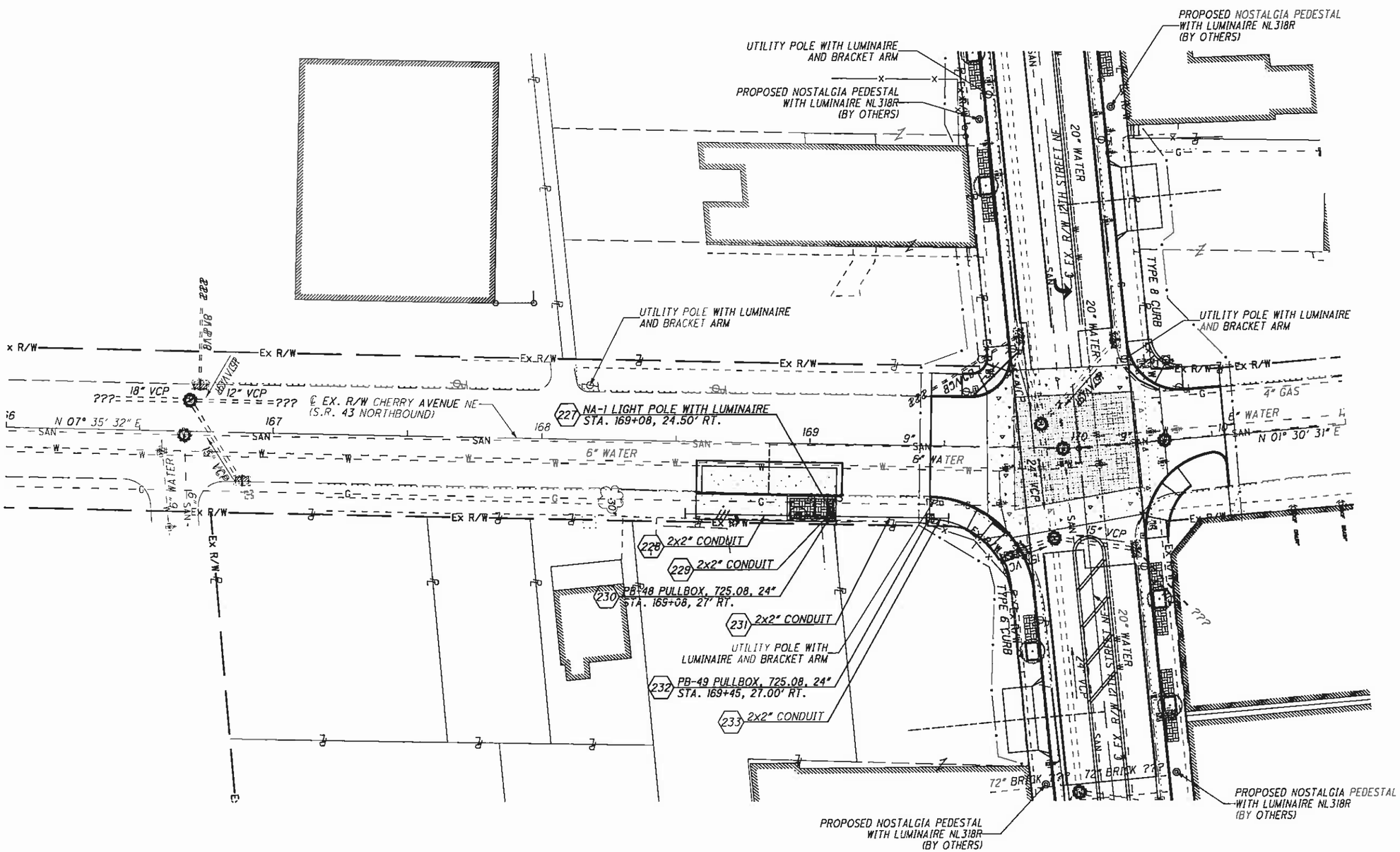

CROSS REFERENCE	
SHEET	DESCRIPTION
120	LEGEND
117-119	LIGHTING QUANTITIES

HORIZONTAL SCALE IN FEET 0 10 20 40

CALCULATED JMK
CHECKED WLC

PLAN - CHERRY AVENUE BUS SHELTER/STOP LOCATIONS

WALNUT & CHERRY COMPLETE STREET BIKE LANES

R:\Stark\SARTA\Task 3 Canton\STA\91592\lighting\sheets\91592LP013.dgn 6/28/2012 1:22:30 PM jroth

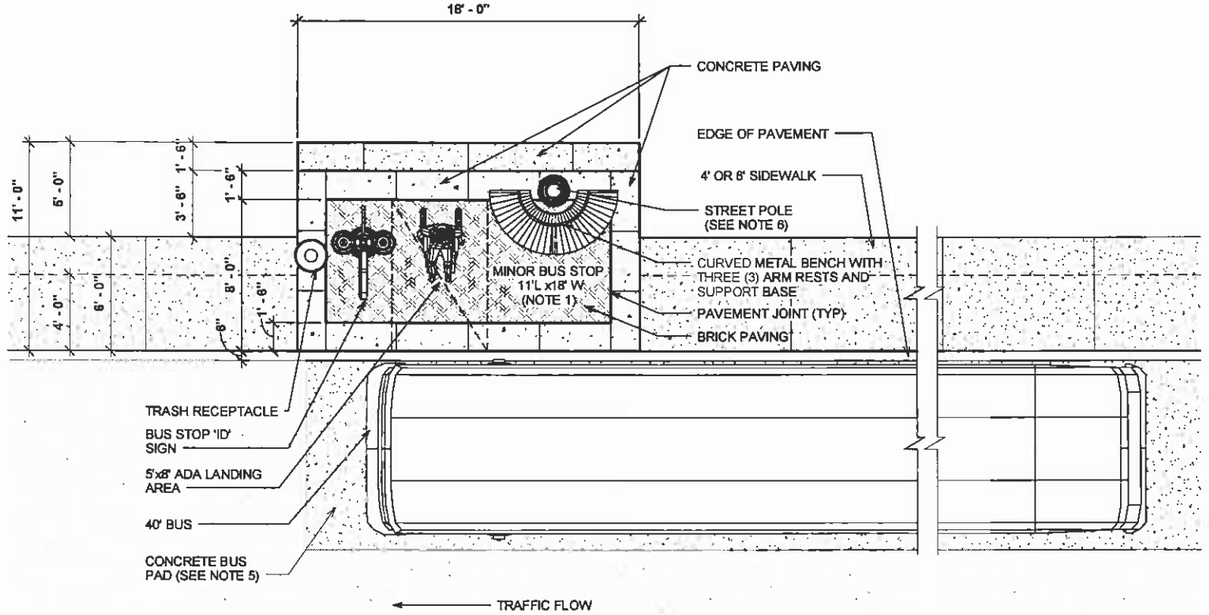

1 TYPICAL MINOR BUS STOP PLAN
1/4" = 1'-0"

PRODUCT NOTES:

Specifications

1. Bus Shelter

All bus shelters are free standing structures and shall be designed and installed with provisions as indicated in project documents. The bus shelter shall comply with all local, state & federal codes, standards and regulations including the Access Board's ADA - Accessibility Guidelines (ADAAG). Each bus shelter shall be of minimum clear inside dimensions of 5'- 0" width, 12'- 0" length & 7'- 0" clear high wall openings at entry points.

A. Submittal Requirements

Prior to fabrication of these bus shelter units, the following shall be submitted to the Owner for review and acceptance.

1. Submit complete shop drawings for shelter design, benches, bike rack, trash receptacles and street pole showing design dimensions and installation details, materials and finishes.
2. Submit necessary structural design calculations for wind loads and other code compliance. All documents shall be stampesigned and sealed by a registered professional Engineer for the State of Ohio.
3. Submit the polyester powder coating finish warranty document for ten (10) years from substantial completion.
4. Submit manufacturer's standard color chart for polyester powder coat finish for owner to select the color.

B. Shelter Roof Systems

The bus shelter shall have hip roof configuration and watertight construction with aluminum structural framing system supporting standing seam structural aluminum roofing system. The perimeter roof gutter shall be provided with drain outlet provisions on the front side through curb.

C. Shelter Framing Systems

Framing systems shall be engineered to contribute strength, durability and aesthetics to bus shelter's design.

Standard material for is 6063-T5 extruded aluminum.
For certain applications, 6061-T6 or 6005-T6alloy/temper aluminum will be acceptable.

Framing members, roofing panels and grillwork finish shall be polyester powder coat in the color black as selected by the Owner.

D. Shelter Wall Systems

The shelter wall configuration shall have three and one half sides fully closed from roof to floor. The walls shall be framed with aluminum structural members with ¼" thick clear tempered safety glass. The decorative grill work shall be incorporated in the wall panels.

Decorative grillwork at wall panels shall be made from welded 1" x 1" x 1/8" extruded aluminum members as indicated. The grillwork shall be applied to the interior side of the wall panel The vertical framing members shall be connected to the concrete slab/foundation with concealed plates and fasteners.

E. Finish Requirements

The roofing panels, framing members and grillwork shall have polyester powder coat finish with graffiti-resistant coating. The color shall be black as selected by the Owner. The ¼" safety glass shall also have the graffiti-resistant coating. The polyester powder coat finish shall be warranted for 10 years to be free from cracking, peeling, chalking or fading against ultraviolet exposure.

2. Benches Specifications

a. Curved metal bench with back (Semi-circular bench): - Eacbench shall be comprised of two components of 90o to form one curved metal bench with back and minimum three armrests per 'each curved shall have min. 40.25 inch outside radius and 14.25 inchinside radius. The bench shall have concealed in-ground support mounting. Curved metal benches shall be furnished and installed as indicated. Acceptable product design is "Model NRB-90" design by Victor Stanley, Inc. (modified for project requirements) or accepted equal.

b. Straight metal bench with backs: - The bench shall be 4'- 0nominal length x 2'- 4" wide with 3 armrests, one at each end and one at mid point. The bench shall have concealed in-ground support mounting. Benches shall be furnished and installed as indicated.

Straight and curved benches shall be welded construction using ¼" x 1 ½" steel bars. 5/8" 0 steel rods and schedule 40 steel pipes. Customize the design as necessary to comply with project requirements.
All bench designs for the project shall be ADA compliant and shall have electrostatic polyester powder coated 8-10 mils. Thick minimum coated finish. The color shall be black as selected by owner from color chart #52007 by Victor Stanley, Inc.

3. Bike Rack Specifications

Bike racks shall be made from tubular 2 3/8" O.D., schedule 40 steel pipe arcs type design. The bike rack mounting shall be concealed in the pavement. The finish shall be factory applied electrostatic polyester powder coating with 8-10 mils. minimum thickness. The acceptable product design is "model BK-3" as manufactured by Victor Stanley, Inc., Dunkirk, Maryland, or accepted equal. The color shall be black as selected by owner from color chart #52007 for powder coatings by Victor Stanley, Inc. Bike rack units shall be furnished and installed as indicated.

4. Trash Receptacle Specifications

Trash receptacles shall be top loading, 36 gallons capacity made from solid steel 5/8 inch top ring with 3/8 x 1 inch vertical steel bars welded construction with elevated recessed pedestal type base and electrostatic polyester powder coated finish. The coating shall be minimum 8-10 mils. thick. The color shall be black as selected by owner from color chart #52007 for powder coatings by Victor Stanley, Inc. Each trash receptacle shall also be supplied with high-density black plastic formed liner. It shall be reinforced, ribbed and molded for durability. The trash receptacle shall be anchor bolted to the pavement. Trash receptacle units shall be furnished and installed as indicated. The acceptable product design is 'Ironsites' series, Model S-42 with standard tapered formed lid as manufactured by Victor Stanley, Inc., Dunkirk, Maryland, or accepted equal.

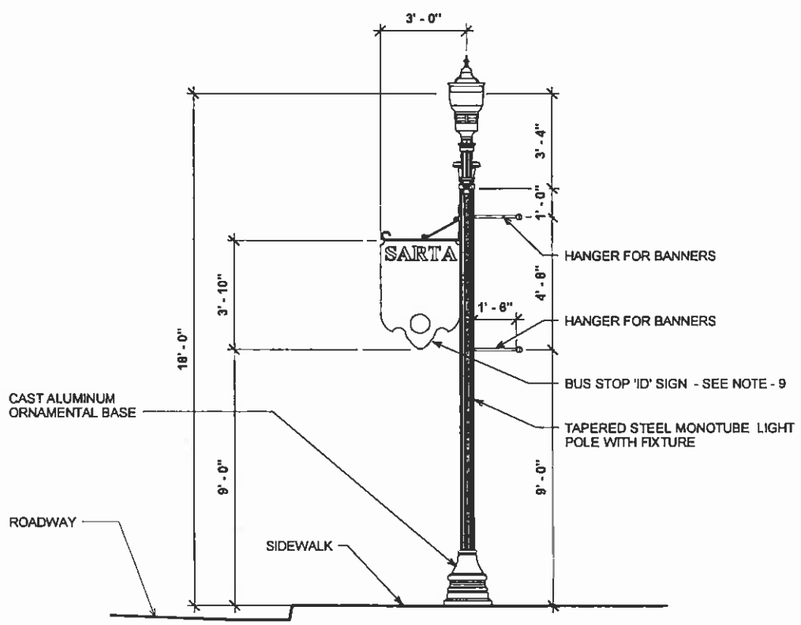

2 BUS STOP ID SIGN POST
3/8" = 1'-0"

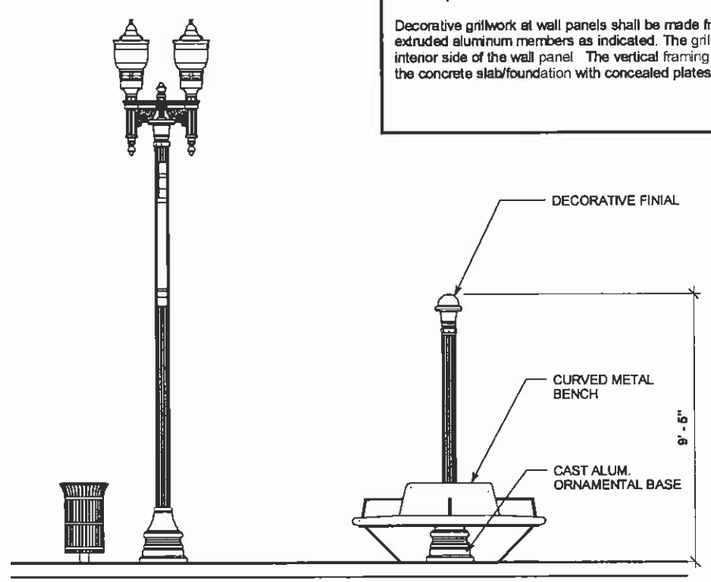

3 ELEVATION
3/8" = 1'-0"

GENERAL NOTES:

1. BICYCLE RACKS ARE NOT REQUIRED WITH MINOR BRT STOPS.
2. SUBMIT COMPLETE SHOP DRAWING AND SAMPLES FOR EACH PRODUCT SHOWING MATERIALS, DESIGN/FABRICATION DETAILS WITH DIMENSIONS, FINISH DETAILS AND COLOFCHARTS FOR OWNER'S APPROVAL.
3. NO PRODUCT SHALL BE PROCURED OR FABRICATED PRIOR TO ITS SHOP DRAWING APPROVAL BY THE OWNER.
4. SEE PLAN SHEETS FOR LOCATION OF STOPS AND AMENITIES.
5. SEE PLAN SHEETS FOR CONCRETE PAD DIMENSIONS / DETAILS.
6. STREET POLE SHALL HAVE POWDER COATED FINISH AND COLOR SHALL BE GREEN TO MATCH THE CITY STREET LIGHT POLES. THE CAST ALUMINUM ORNAMENTAL BASE SHALL ALSO MATCH THE CITY STREET LIGHT POLE DESIGN.
7. EACH MINOR BUS STOP SHALL INCLUDE A STREET POLE WITH FINIAL AND DECORATIVE BASE, CURVED BENCH, TRASH RECEPTACLE, STATION ID SIGN, AND HANGER BRACKET. THE COSTS FOR ALL CONCRETE PAVEMENT, CURBS, SIDEWALKS, BRICK, AND LIGHTING SHALL BE INCLUDED IN THE APPROPRIATE PAY ITEMS IN THE ROADWAY PLANS. PAYMENT FOR THE MINOR BUS STOP ITEMS SHALL BE INCLUDED WITH ITEM 690E98000, SPECIAL – MISC.: TYPICAL MINOR BRT STOP, EACH, FOR PAYMENT.
8. ALL CAST CONCRETE, BRICK WORK AND LIGHT POLES SHALL BE PAID FOR UNDER INDIVIDUAL PAY ITEMS.
9. SEE DRAWING 135/135 FOR BUS STOP ID SIGN.

5/11/2012 4 21 37 PM

PARSONS BRINCKERHOFF
PARSONS BRINCKERHOFF
3340 Peachtree Road, Ste. 2400, Atlanta, GA 30326
404 - 237 - 2115 FAX 404 - 237 - 3015

HORIZONTAL SCALE: As Indicated
DESIGNED D.V. Shah
DRAWN M. Cooper

TYPICAL MINOR BRT STOP WITHOUT BUS SHELTER
PLAN & ELEVATIONS

WALNUT & CHERRY
COMPLETE STREET
BIKE LANES

Plot Date/Time 5/11/2012 4 21 37 PM File Name Q:\A&E\CLIENT\BRT System Canton Ohio\CAD\BRT-Minor Bus Stop Final-1.rvt

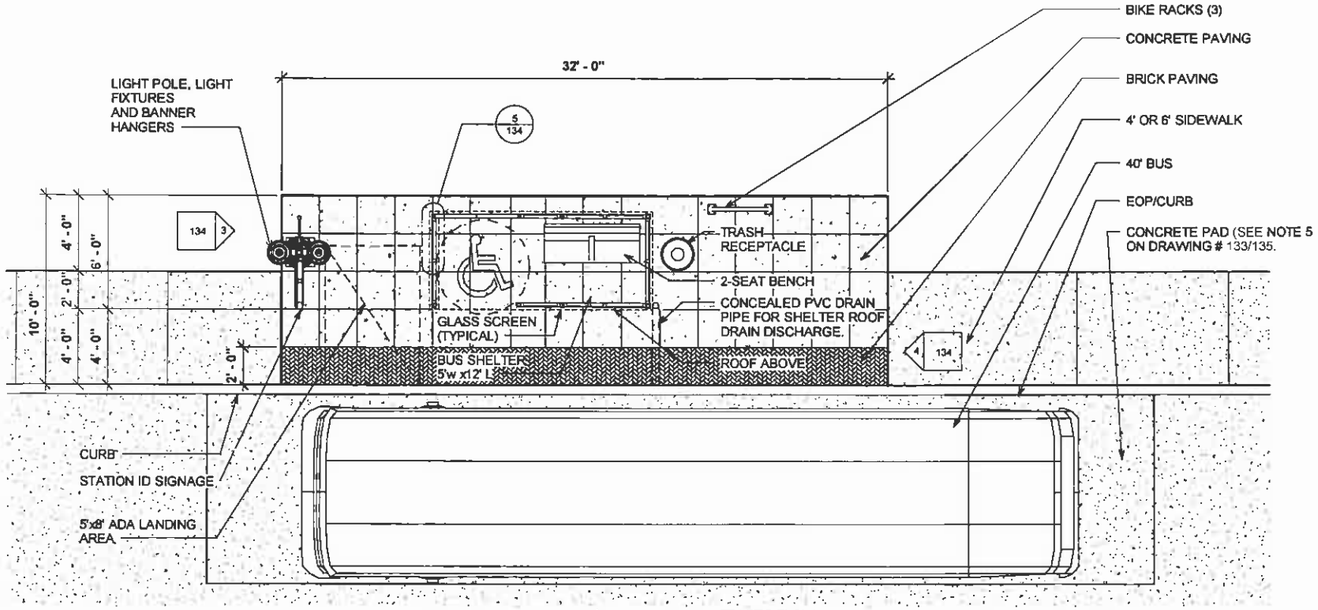

1 TYPICAL MAJOR BUS STOP PLAN
1/4" = 1'-0"

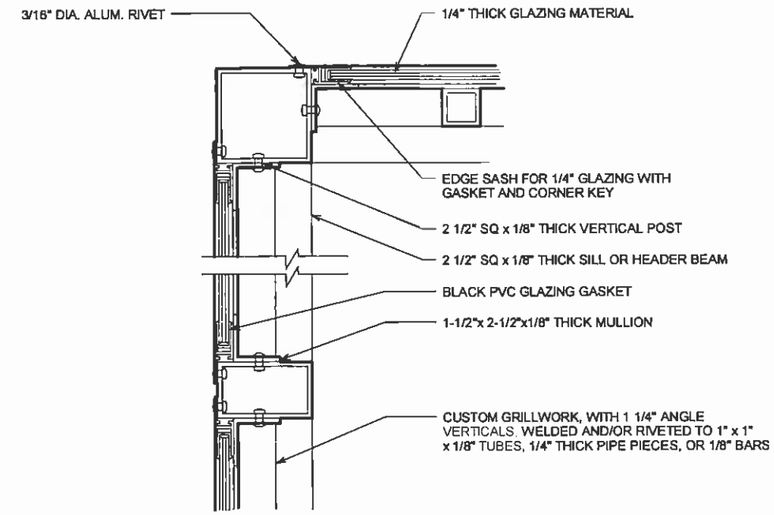

5 DETAIL
6" = 1'-0"

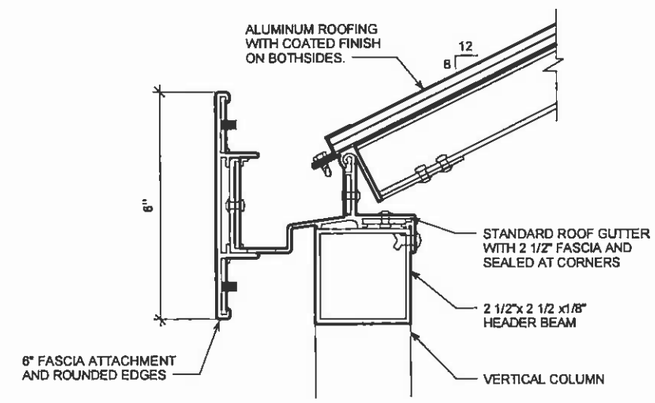

6 ROOF DETAIL
6" = 1'-0"

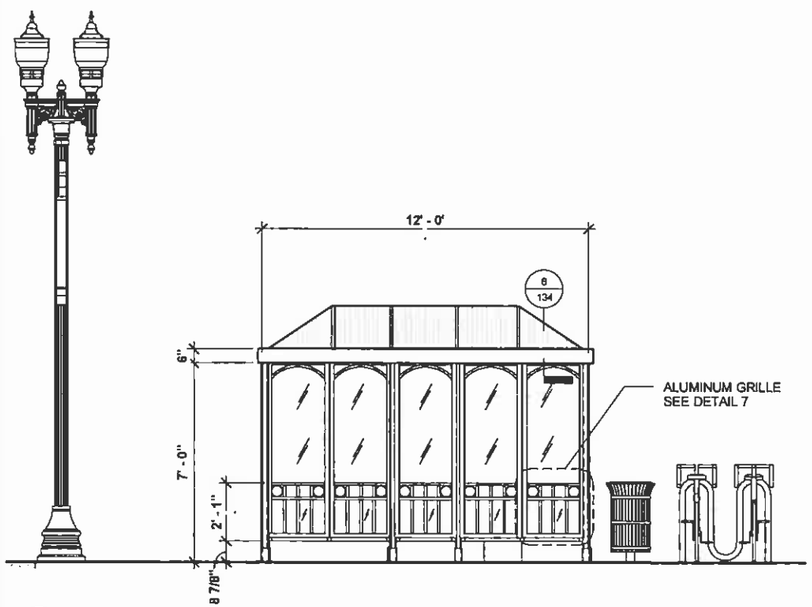

2 ELEVATION
3/8" = 1'-0"

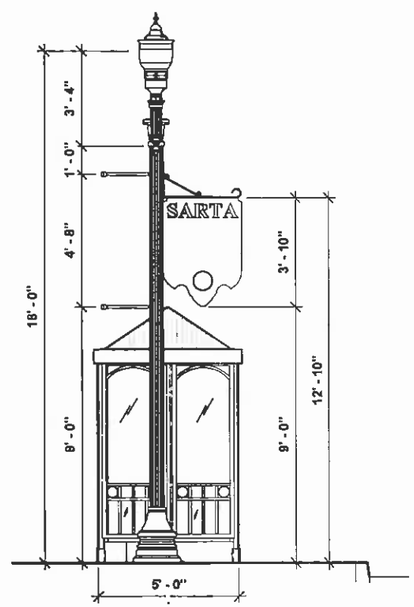

3 ELEVATION
3/8" = 1'-0"

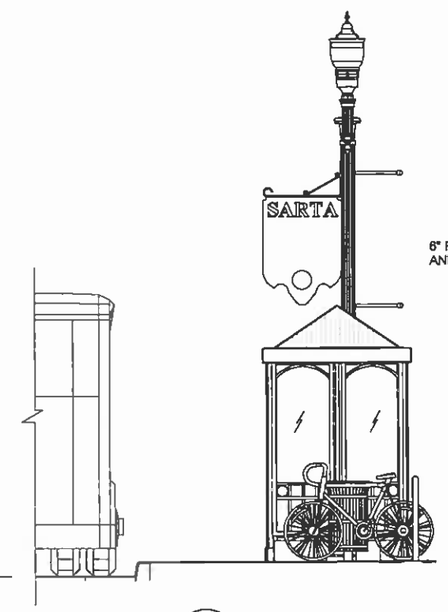

4 ELEVATION
3/8" = 1'-0"

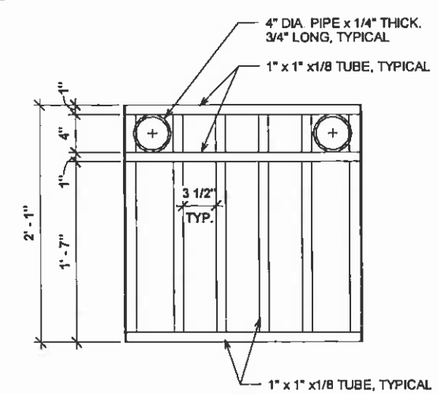

7 GRILL WORK DETAIL
1 1/2" = 1'-0"

GENERAL NOTES:

1. ALL GENERAL NOTES, PRODUCT NOTE AND DIMENSIONAL INFORMATION SHOWN ON TYPICAL MINOR BRT STOP WITHOUT BUS SHELTER DRAWING APPLY TO THIS DRAWING, UNLESS NOTED OTHERWISE.
2. EACH MAJOR BUS STOP SHALL INCLUDE A BUS SHELTER, BENCH, TRASH RECEPTACLE, BIKE RACK, STATION ID SIGN, AND HANGER BRACKET. THE COSTS FOR ALL CONCRETE PAVEMENT, CURBS, SIDEWALKS, BRICK AND LIGHTING SHALL BE INCLUDED IN THE APPROPRIATE PAY ITEMS IN THE ROADWAY PLANS. PAYMENT FOR THE MAJOR BUS STOP ITEMS SHALL BE INCLUDED WITH ITEM 690E98000, SPECIAL – MISC.: TYPICAL MAJOR BRT STOP WITH BUS SHELTER, EACH, FOR PAYMENT.

5/11/2012 4 21 40 PM

HORIZONTAL SCALE: As indicated

DESIGNED D.V. Shah
DRAWN M. Cooper

TYPICAL MAJOR BRT STOP WITH BUS SHELTER PLAN & ELEVATIONS

PARSONS BRINCKERHOFF
PARSONS BRINCKERHOFF
3340 Peachtree Road, Ste. 2400, Atlanta, GA 30326
404 - 237 - 2115 FAX 404 - 237 - 3015

WALNUT & CHERRY
COMPLETE STREET
BIKE LANES

Plot Date/Time 5/11/2012 4 21 40 PM File Name Q:\A&B\CLIENT\BRT System Canton Ohio\CAD\BRT-Minor Bus Stop Final 1.rvt

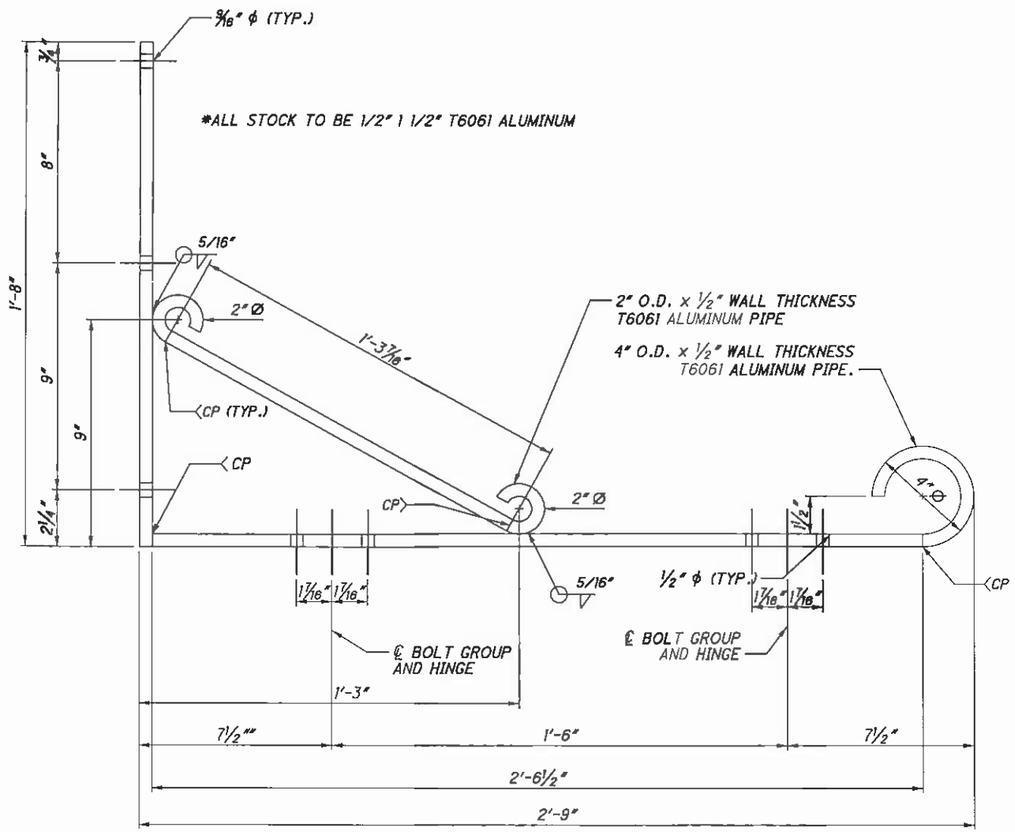

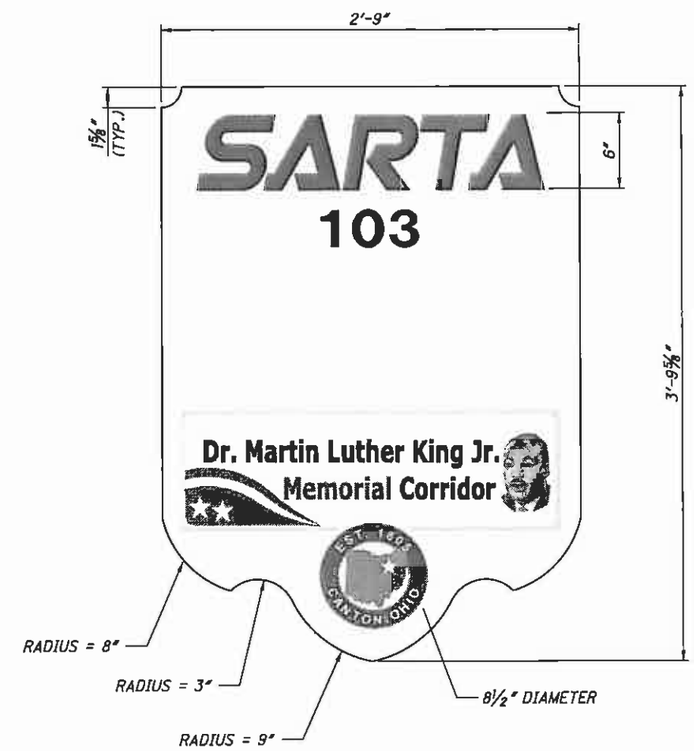

BRT STOP STATION ID SIGN SUPPORT BRACKET

SUPPORT BRACKET NOTES:

1) HOLES SHALL BE DRILLED IN MEMBERS PRIOR TO WELDING.

2) ALL WELDS SHALL BE GROUND SMOOTH BEFORE POWDER COATING.

3) BRACKET ASSEMBLIES SHALL BE POWDER COATED AFTER FABRICATION. THE COLOR SHALL BE GREEN TO MATCH THE CITY STANDARD FOR LIGHT POLES.

4) EACH BRACKET SHALL BE SUPPLIED WITH 2 STAINLESS STEEL FULL MORTISE DOOR HINGES. HINGES SHALL BE 3.5"x3.5"x0.123" THICK.

5) BRACKETS SHALL INCLUDE 8 - 1/2" DIAMETER x 1 1/2" LONG STAINLESS STEEL BOLTS WITH 2 STAINLESS STEEL WASHERS AND 2 STAINLESS STEEL NUTS PER BOLT.

6) EACH BOLT SHALL BE DOUBLE NUTTED.

7) THE HOLE SPACING OF THE HINGES SHALL BE VERIFIED PRIOR TO FABRICATING THE BRACKETS.

8) THE HOLES IN THE BAR STOCK SHALL BE CENTERED IN THE MEMBERS.

9) BRACKETS SHALL BE POWDER COATED CBD GREEN (COLOR AND FORMULA IS ON FILE AT THE MIDWEST TANK SERVICES CO., INC., CANTON, OH).

BRT STOP STATION ID SIGN

SIGN NOTES:

1) SIGN SHALL BE MADE FROM 6mm WHITE/WHITE DIBOND WITH 16 PASS DIGITAL PRINTED GRAPHICS ON 3M 180-C VINYL WITH 3M MATTE LAMINATE APPLIED OVER ALL GRAPHICS.

2) ONE SIGN SHALL BE PROVIDED AT EACH BUS STOP ON WALNUT AND CHERRY WITHIN THE PROJECT LIMITS (10 TOTAL).

3) CONTRACTOR SHALL PROVIDE A SAMPLE SIGN TO THE CITY FOR APPROVAL PRIOR TO ORDERING ALL OTHER SIGNS.

4) SIGN SHALL BE DOUBLE SIDED.

5) BUS STOP ROUTE NUMBERS TO BE PROVIDED BY SARTA AT THE PRECONSTRUCTION MEETING.

6) GRAPHICS WILL BE PROVIDED BY THE CITY OF CANTON AT THE PRECONSTRUCTION MEETING AND WILL INCLUDE REQUIRED FEDERAL COLOR NUMBERS.

7) 5/8" DIAMETER HOLES WILL BE FIELD DRILLED FOR ATTACHMENT TO BRACKET HINGES.

8) 1/4" DIAMETER SS BOLTS WITH LOCK NUTS SHALL BE PROVIDED (4 PER SIGN).

CALCULATED CJP
CHECKED WLC

TYPICAL BRT STOP SIGNAGE DETAILS

WALNUT & CHERRY
COMPLETE STREET
BIKE LANES

R:\Stark\SARTA\Task 3 Canton\STA\91592\traffic\sheets\91592GM001.dgn 6/28/2012 8:37:57 AM jroth

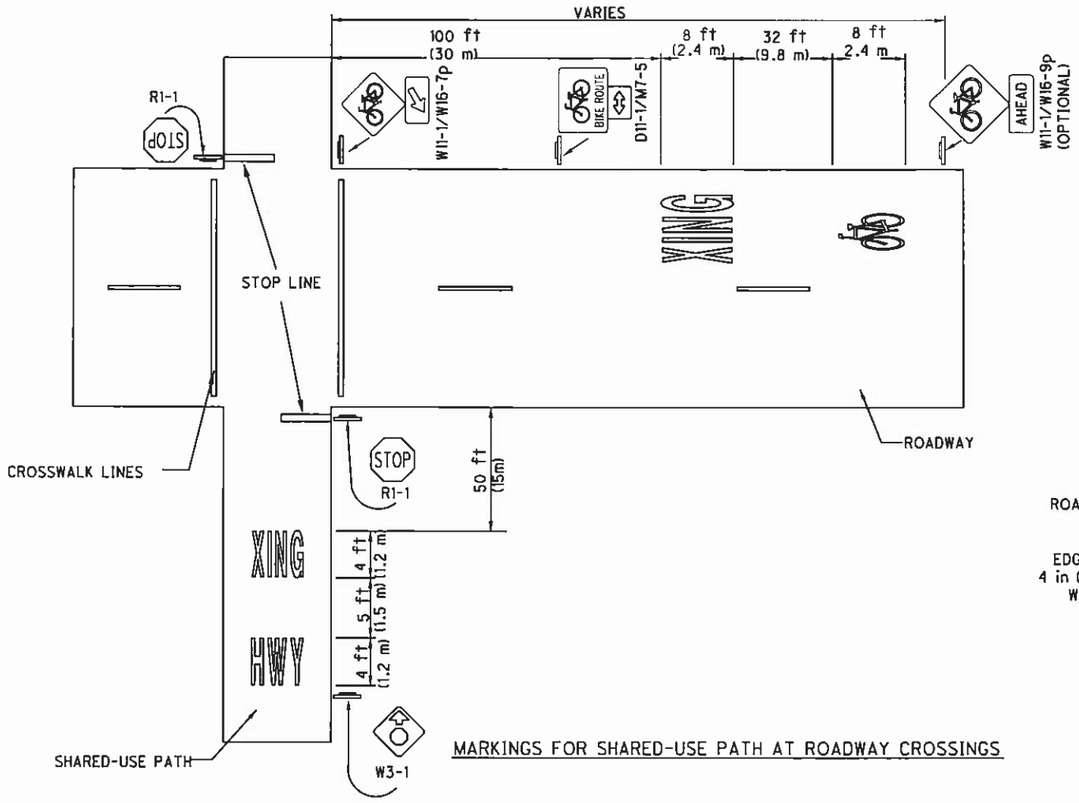

MARKINGS FOR SHARED-USE PATH AT ROADWAY CROSSINGS

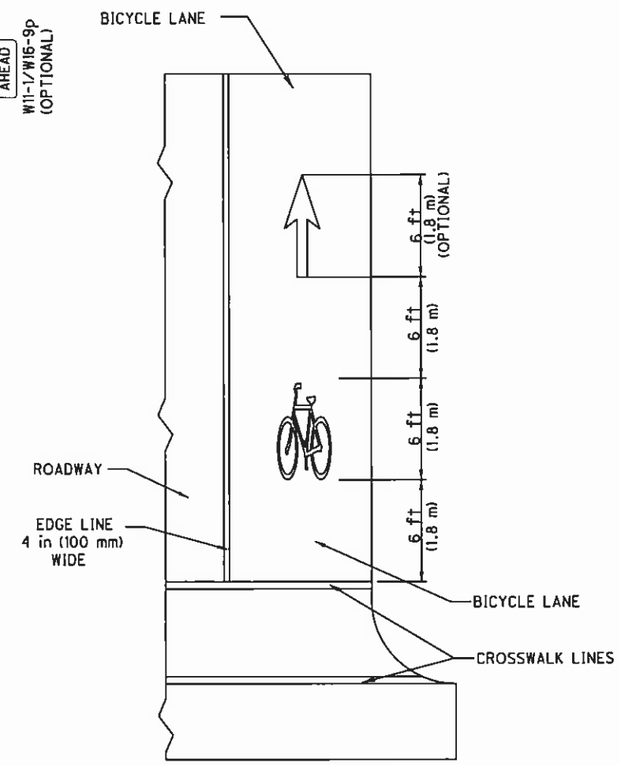

MARKINGS FOR BICYCLE LANE

GENERAL NOTES:

1. Edge lines are optional on the shared-use path. If used, the edge line should be 2 inches (50 millimeters) wide.
2. Center line is optional on the shared-use path. If used, the center line should be 2 inches (50 millimeters) wide with a 3 foot (0.9 meter) segment and 9 foot (2.7 meter) gap.
3. Arrows, words and symbol markings are optional on the shared-use path.

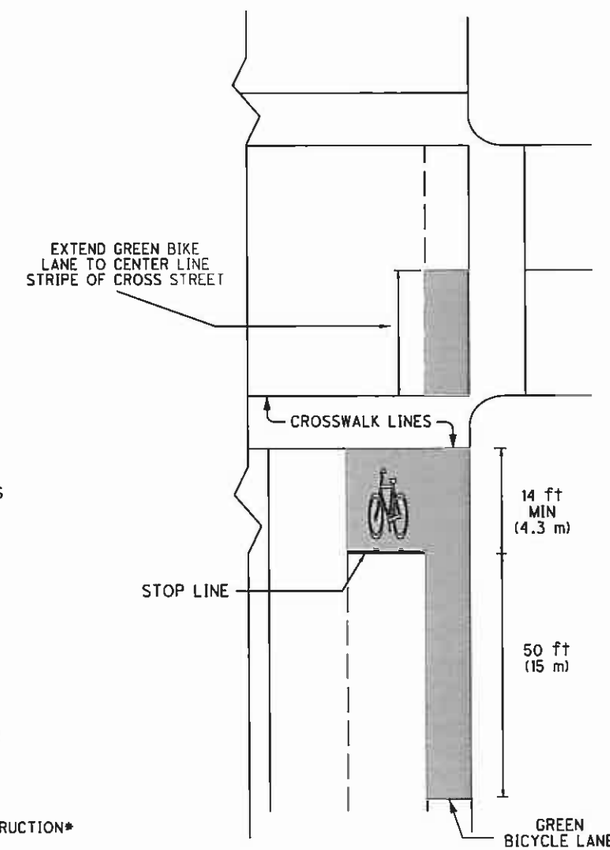

MARKINGS FOR BIKE BOX

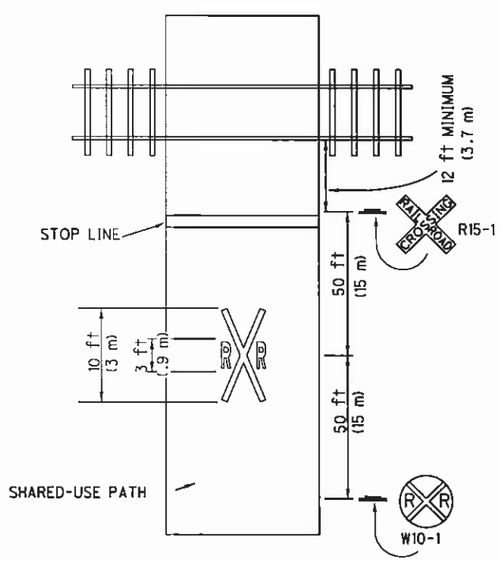

MARKINGS FOR SHARED-USE PATH AT RAILROAD CROSSINGS

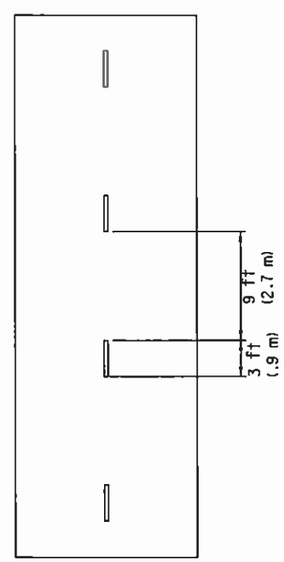

CENTER LINE MARKINGS FOR SHARED-USE PATH

* PROVIDE AN ADDITIONAL FOOT (0.3 M) OF OFFSET FOR A RAISED OBSTRUCTION AND USE THE FORMULA L=(W+1)S [L=0.6(W+0.3)S] FOR THE TAPER LENGTH.

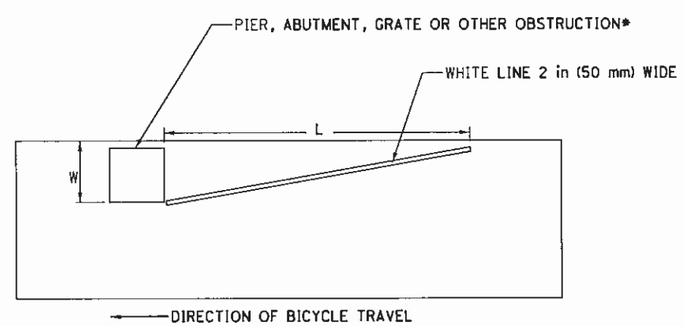

TYPICAL MARKINGS AROUND AN OBSTRUCTION

FOR ENGLISH UNITS: L(ft)= WS
FOR METRIC UNITS: L (m)= .6WS

W- IS THE WIDTH IN FEET (METERS)
S- IS THE BICYCLE APPROACH SPEED IN MILES (KILOMETERS) PER HOUR

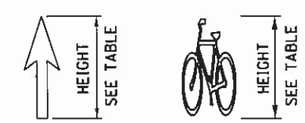

FACILITY TYPE	HEIGHT	STRAIGHT ARROW	BIKE SYMBOL	HWY	XING	RXR SYMBOL
	feet (m)	AREA - SQUARE FEET (SQUARE M)				
SHARED-USE PATH	4 (1.2)	4 (0.37)	3 (0.28)	5 (0.47)	6 (0.56)	----
	10 (3.1)	----	----	----	----	16 (1.5)
BICYCLE LANE	6 (1.8)	6 (0.56)	5 (0.47)	----	16 (1.5)	----
ROADWAY- URBAN	6 (1.8)	5 (0.47)	5 (0.47)	----	16 (1.5)	----
ROADWAY- RURAL	8 (2.4)	7 (0.65)	7 (0.65)	----	21 (2.0)	----

OFFICE OF TRAFFIC ENGINEERING

DESIGNED | REVIEWED LAM

REVISION DATE 01/21/11 | CHECKED

PJS NUMBER 207000

PLAN INSERT SHEET

BIKEWAY PAVEMENT MARKING DETAILS

1/1

PLAN VIEW
NOT TO SCALE

STAND-UP CONCRETE CURB SECTION | **CONCRETE CURB & GUTTER SECTION**

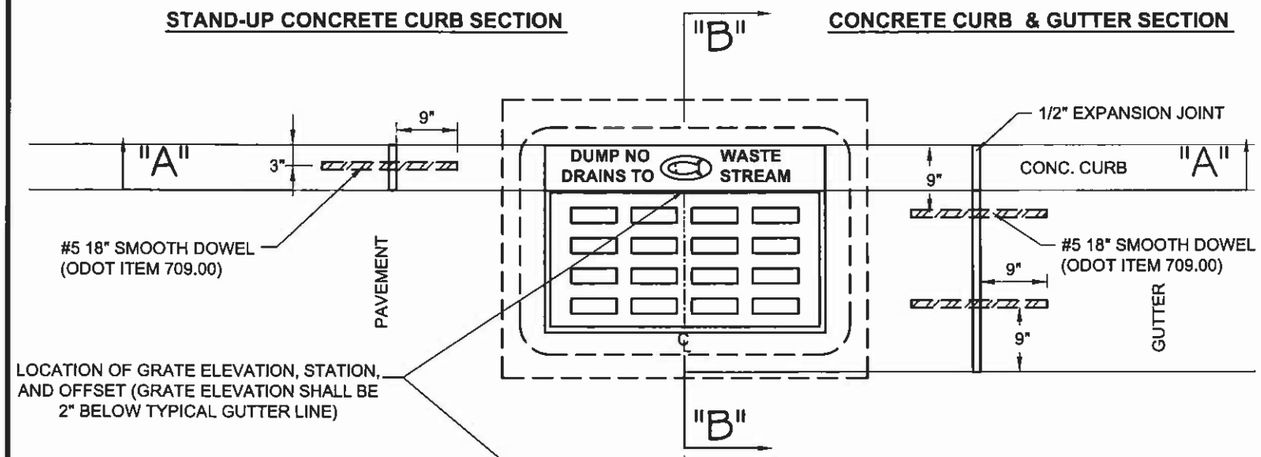

NOTES:

1. ALL WORK SHALL CONFORM TO ODOT ITEM 604 EXCEPT AS OTHERWISE NOTED HEREIN.
2. PRECAST CONCRETE OR BRICK CATCH BASINS ARE ALLOWED AS NOTED HEREIN.
3. ALL CONCRETE SHALL CONFORM TO ODOT ITEM 499 CLASS C (4000 psi).
4. WHEN STREET PROFILE SLOPE IS 5% OR STEEPER, CONSTRUCT CATCH BASIN IN ACCORDANCE WITH CITY STD. DWG. NO. 3.
5. A CONCRETE CHANNEL SHALL BE POURED INTO THE BOTTOM OF THE CATCH BASIN USING CLASS 'C' CONCRETE. THE CHANNEL SHALL TAPER FROM 9" THICKNESS TO 2" MIN. THICKNESS AT THE LOWEST SEWER INVERT AND SHALL BE FINISHED WITH A SMOOTH SURFACE.
6. THE EXCAVATED AREA AROUND THE CATCH BASIN SHALL BE BACKFILLED WITH ODOT ITEM 703.11, TYPE 1 (304, 411, OR 617) COMPACTED IN 8" LIFTS OR ODOT ITEM 613. NO FOUNDRY SAND OR SLAG PERMITTED.
7. EXPANSION JOINT MATERIAL SHALL CONFORM TO ODOT ITEM 705.03. 1" OF JOINT SEALER (705.04) SHALL BE PLACED OVER EXPANSION JOINTS.
8. CASTINGS SHALL BE EAST JORDAN 7030 CURB INLET WITH TYPE T1 BACK AND TYPE M6 VANE GRATE, NEENAH R-3067-L, OR EQUAL APPROVED BY CITY ENGINEER (GRATE USED SHALL NOT BE SPECIFICALLY IDENTIFIED BY MANUFACTURER AS NOT SUITABLE FOR BICYCLE TRAFFIC). THE CASTING BACK (HOOD) MUST INCLUDE "ECO-SENSITIVE" MARKINGS SUCH AS: "DUMP NO WASTE; DRAINS TO STREAM" AND AN AQUATIC LIFE LOGO. THE LETTERING AND LOGO SHALL BE RAISED OR RECESSED AND INTEGRAL WITH THE CASTING OF THE BACK. ALTERNATE NOTATION OR LOGO IS SUBJECT TO THE CITY ENGINEER'S APPROVAL.
9. ALL OPENINGS AND KNOCKOUTS FOR INLET AND OUTLET PIPING SHALL BE FASHIONED NEATLY. ALL ANNULAR SPACE SHALL BE FILLED WITH CEMENT GROUT, BRICK AND MORTAR, OR CLASS 'C' CONCRETE.
10. ONE 4" DIAMETER INLET PIPE SHALL BE INSTALLED ON THE SIDE OF THE CATCH BASIN OPPOSITE THE STREET (AS SHOWN).
11. KNOCK-OUT PANELS ARE NOT ALLOWED UNLESS PRE-APPROVED BY THE CITY ENGINEER.
12. ODOT REFERENCES ARE FROM THE CURRENT ODOT CONSTRUCTION AND MATERIAL SPECIFICATIONS. ANY DISCREPANCIES SHALL BE SUBJECT TO THE CITY ENGINEER'S DISCRETION.

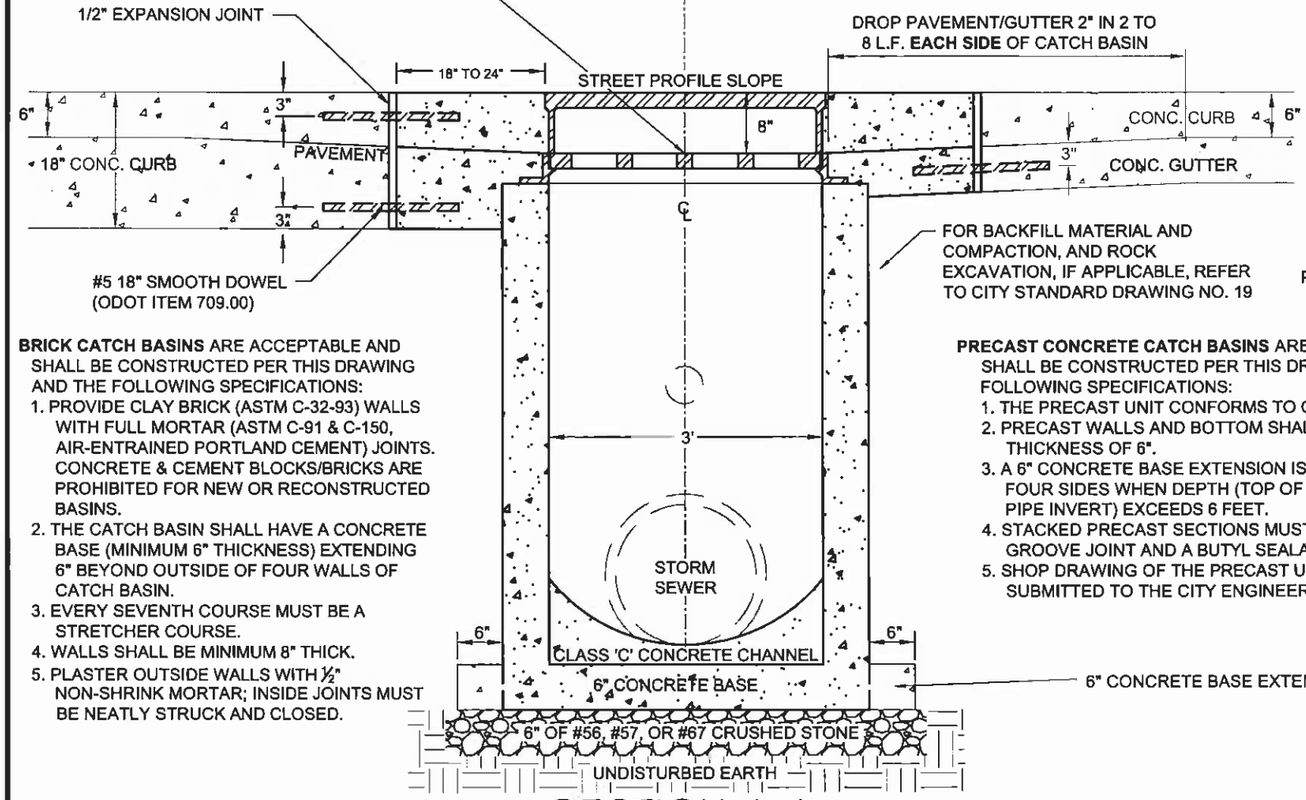

BRICK CATCH BASINS ARE ACCEPTABLE AND SHALL BE CONSTRUCTED PER THIS DRAWING AND THE FOLLOWING SPECIFICATIONS:

1. PROVIDE CLAY BRICK (ASTM C-32-93) WALLS WITH FULL MORTAR (ASTM C-91 & C-150, AIR-ENTRAINED PORTLAND CEMENT) JOINTS. CONCRETE & CEMENT BLOCKS/BRICKS ARE PROHIBITED FOR NEW OR RECONSTRUCTED BASINS.
2. THE CATCH BASIN SHALL HAVE A CONCRETE BASE (MINIMUM 6" THICKNESS) EXTENDING 6" BEYOND OUTSIDE OF FOUR WALLS OF CATCH BASIN.
3. EVERY SEVENTH COURSE MUST BE A STRETCHER COURSE.
4. WALLS SHALL BE MINIMUM 8" THICK.
5. PLASTER OUTSIDE WALLS WITH ½" NON-SHRINK MORTAR; INSIDE JOINTS MUST BE NEATLY STRUCK AND CLOSED.

PRECAST CONCRETE CATCH BASINS ARE ACCEPTABLE AND SHALL BE CONSTRUCTED PER THIS DRAWING AND THE FOLLOWING SPECIFICATIONS:

1. THE PRECAST UNIT CONFORMS TO ODOT ITEM 706.13.
2. PRECAST WALLS AND BOTTOM SHALL HAVE A MINIMUM THICKNESS OF 6".
3. A 6" CONCRETE BASE EXTENSION IS REQUIRED ON ALL FOUR SIDES WHEN DEPTH (TOP OF GRATE TO LOWEST PIPE INVERT) EXCEEDS 6 FEET.
4. STACKED PRECAST SECTIONS MUST HAVE A TONGUE/ GROOVE JOINT AND A BUTYL SEALANT.
5. SHOP DRAWING OF THE PRECAST UNIT SHALL BE SUBMITTED TO THE CITY ENGINEER FOR APPROVAL.

SECTION A-A
NOT TO SCALE

(PRECAST CONCRETE CATCH BASIN SHOWN)

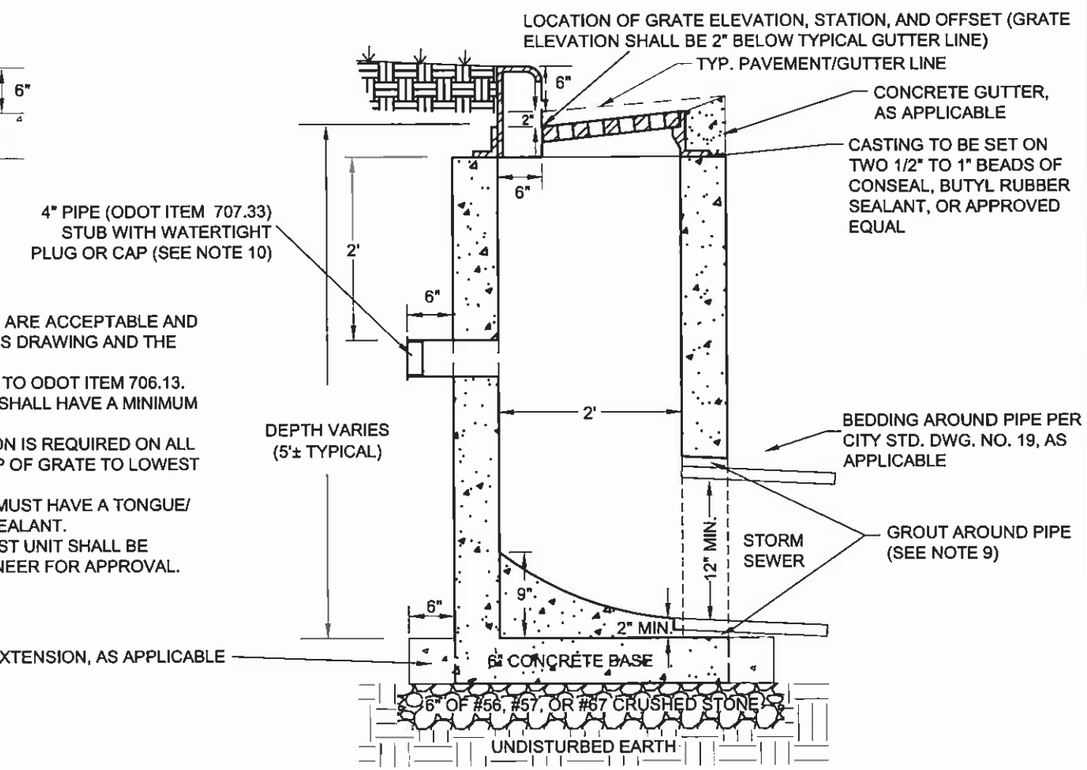

SECTION B-B
NOT TO SCALE

OFFICE OF THE CITY ENGINEER
CANTON, OHIO
DANIEL J. MOEGLIN, P.E., CITY ENGINEER
2436 30th St. NE 44705 330-489-3381 www.cantonohio.gov/engineering

APPROVED DATE: MAR. 2012

APPROVED BY: CDB, RMB, SLH

DRAWING FILE NAME: **ce_01.dwg**

REVISIONS

DESCRIPTION	DATE	BY

STANDARD DRAWING NO. 1

CURB INLET CATCH BASIN

SHEET 1 OF 1

NOTES:

1. ALL WORK SHALL CONFORM TO ODOT ITEM 604 EXCEPT AS OTHERWISE NOTED HEREIN.
2. PRECAST CONCRETE OR BRICK CATCH BASINS ARE ALLOWED AS NOTED HEREIN.
3. IF THE CATCH BASIN WILL BE USED IN A TRAFFIC-BEARING APPLICATION, THE PRECAST CONCRETE PORTION OF AN ODOT 2-2B CATCH BASIN MAY BE USED. HOWEVER, THE INLET FRAME AND GRATE AS SPECIFIED HEREIN SHALL BE USED IN LIEU OF THE ODOT 2-2 "LAY-IN" GRATE. ALL ANNULAR SPACE REMAINING BETWEEN THE BOTTOM OF THE INLET FRAME AND THE TOP OF THE PRECAST SECTION SHALL BE FILLED WITH CEMENT GROUT OR CLASS 'C' CONCRETE. IF THE CATCH BASIN WILL BE USED IN A NON-TRAFFIC-BEARING APPLICATION, AN ODOT 2-2 CATCH BASIN MAY BE USED WITH THE STANDARD "LAY-IN" GRATE.
4. ALL CONCRETE SHALL CONFORM TO ODOT ITEM 499 CLASS C (4000 psi).
5. A CONCRETE CHANNEL SHALL BE POURED INTO THE BOTTOM OF THE CATCH BASIN USING CLASS 'C' CONCRETE. THE CHANNEL SHALL TAPER FROM 9" THICKNESS TO 2" MIN. THICKNESS AT THE LOWEST SEWER INVERT AND SHALL BE FINISHED WITH A SMOOTH SURFACE.
6. THE EXCAVATED AREA AROUND THE CATCH BASIN SHALL BE BACKFILLED WITH ODOT ITEM 703.11, TYPE 1 (304, 411, OR 617) COMPACTED IN 8" LIFTS. NO FOUNDRY SAND OR SLAG PERMITTED.
7. WHERE CATCH BASIN WILL BE LOCATED WITHIN CROSSWALK, AT ADA RAMP, OR IN DESIGNATED BIKE LANE, CASTING SHALL BE EAST JORDAN IRON WORKS (EJIW) 5250 INLET WITH V-5622080 ADA GRATE OR NEENAH R-3405-A INLET WITH TYPE 'L' GRATE, OR EQUAL APPROVED BY CITY ENGINEER. AS APPLICABLE, GRATE SHALL BE ORIENTED SUCH THAT THE LONG OPENINGS ARE PERPENDICULAR TO NORMAL DIRECTION OF BICYCLE TRAFFIC FLOW. IN OTHER LOCATIONS, CASTING SHALL BE EJIW 5250 OR NEENAH R-3405 INLET AND STANDARD GRATE MAY BE USED. IN ALL LOCATIONS, GRATE MUST INCLUDE "ECO-SENSITIVE" MARKINGS SUCH AS: "DUMP NO WASTE; DRAINS TO STREAM" AND AN AQUATIC LIFE LOGO. THE LETTERING AND LOGO SHALL BE RAISED OR RECESSED AND INTEGRAL WITH THE CASTING. ALTERNATE NOTATION OR LOGO IS SUBJECT TO THE CITY ENGINEER'S APPROVAL
8. ALL OPENINGS AND KNOCKOUTS FOR INLET AND OUTLET PIPING SHALL BE FASHIONED NEATLY. ALL ANNULAR SPACE SHALL BE FILLED WITH CEMENT GROUT, BRICK AND MORTAR, OR CLASS 'C' CONCRETE.
9. ODOT REFERENCES ARE FROM THE CURRENT ODOT CONSTRUCTION AND MATERIAL SPECIFICATIONS. ANY DISCREPANCIES SHALL BE SUBJECT TO THE CITY ENGINEER'S DISCRETION.

BRICK CATCH BASINS ARE ACCEPTABLE AND SHALL BE CONSTRUCTED PER THIS DRAWING AND THE FOLLOWING SPECIFICATIONS:

1. PROVIDE CLAY BRICK (ASTM C-32-93) WALLS WITH FULL MORTAR (ASTM C-91 & C-150, AIR-ENTRAINED PORTLAND CEMENT) JOINTS. CONCRETE & CEMENT BLOCKS/BRICKS ARE PROHIBITED FOR NEW OR RECONSTRUCTED BASINS.
2. THE CATCH BASIN SHALL HAVE A CONCRETE BASE (MINIMUM 6" THICKNESS) EXTENDING 6" BEYOND OUTSIDE OF FOUR WALLS OF CATCH BASIN.
3. EVERY SEVENTH COURSE MUST BE A STRETCHER COURSE.
4. WALL SHALL BE MINIMUM 8" THICK.
5. PLASTER OUTSIDE WALLS WITH ½" NON-SHRINK MORTAR; INSIDE JOINTS MUST BE NEATLY STRUCK AND CLOSED.

PRECAST CONCRETE CATCH BASINS ARE ACCEPTABLE AND SHALL BE CONSTRUCTED PER THIS DRAWING AND THE FOLLOWING SPECIFICATIONS:

1. THE PRECAST UNIT SHALL CONFORM TO ODOT ITEM 706.13.
2. PRECAST WALLS AND BOTTOM SHALL HAVE A MINIMUM THICKNESS OF 6".
3. A 6" CONCRETE BASE EXTENSION IS REQUIRED ON ALL FOUR SIDES WHEN DEPTH (TOP OF GRATE TO LOWEST PIPE INVERT) EXCEEDS 6 FEET.
4. STACKED PRECAST SECTIONS MUST HAVE A TONGUE/ GROOVE JOINT AND A BUTYL SEALANT.
5. SHOP DRAWING OF THE PRECAST UNIT SHALL BE SUBMITTED TO THE CITY ENGINEER FOR APPROVAL.

PLAN VIEW

NOT TO SCALE

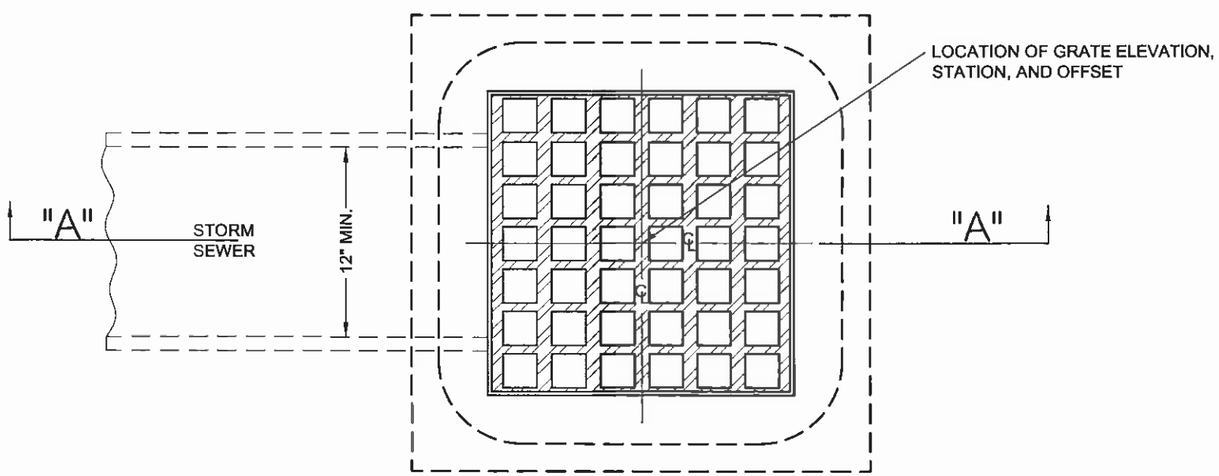

SECTION A-A

NOT TO SCALE

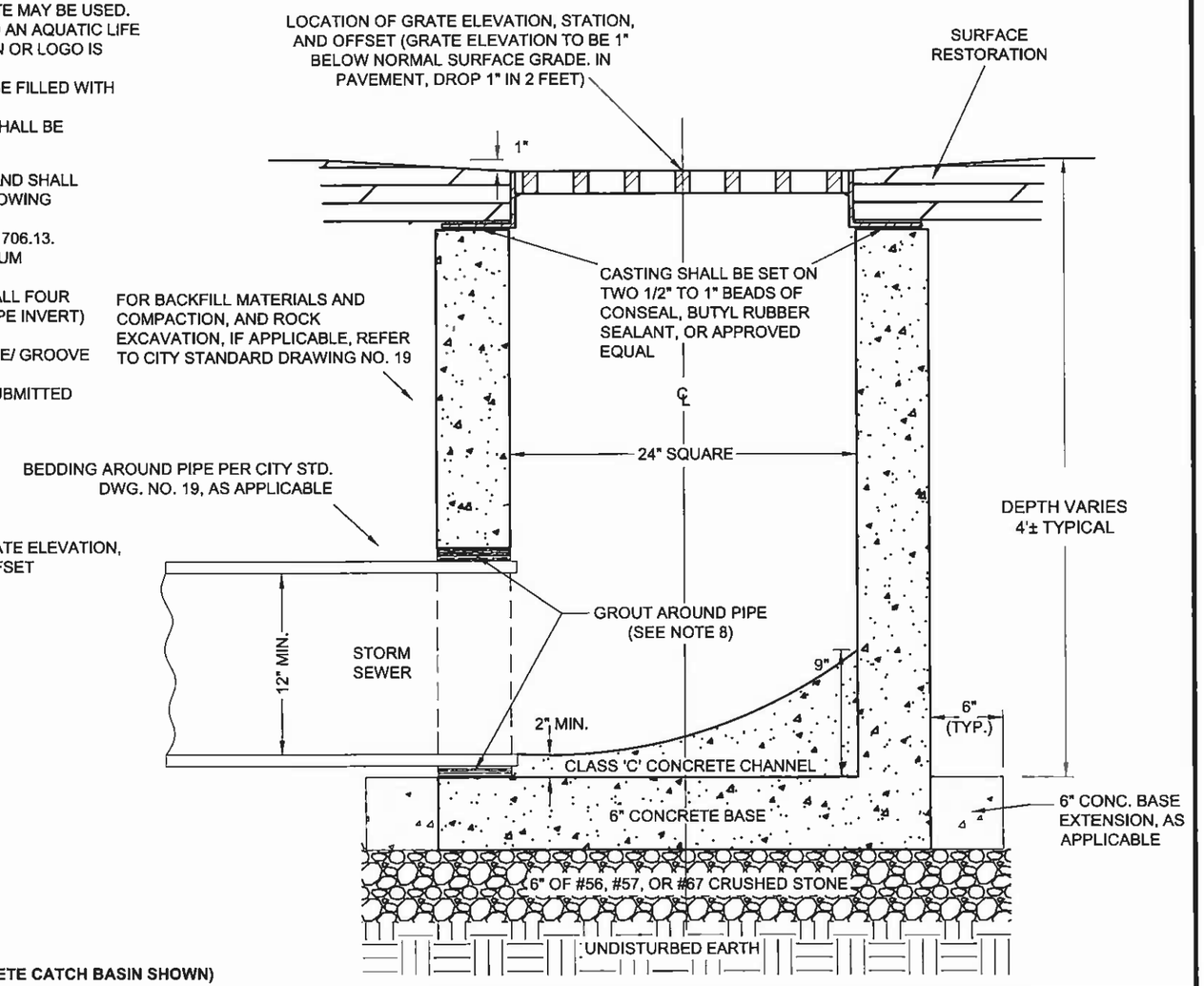

(PRECAST CONCRETE CATCH BASIN SHOWN)

OFFICE OF THE CITY ENGINEER
CANTON, OHIO
DANIEL J. MOEGLIN, P.E., CITY ENGINEER
2436 30th St. NE 44705 330-489-3381 www.cantonohio.gov/engineering

APPROVED DATE: MAR. 2012

APPROVED BY: CDB, RMB, SLH

DRAWING FILE NAME: ce_04.dwg

REVISIONS		
DESCRIPTION	DATE	BY

STANDARD DRAWING NO. 4

SQUARE-TOP CATCH BASIN

SHEET 1 OF 1

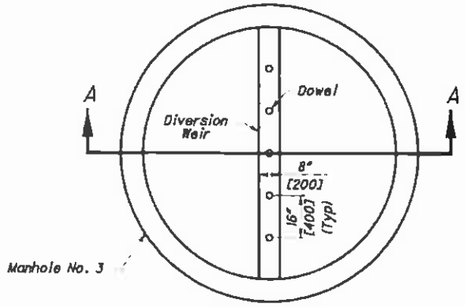

MANHOLE NO. 3 W/
__" BASE I.D. AND __" WEIR
(NTS)

ECCENTRIC CONE IS STANDARD FOR CITY OF CANTON
SEE NOTE 2

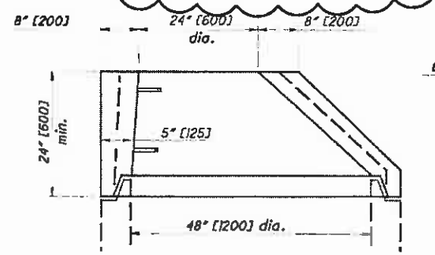

ALTERNATE
ECCENTRIC CONE TOP
~~(Only if specified)~~

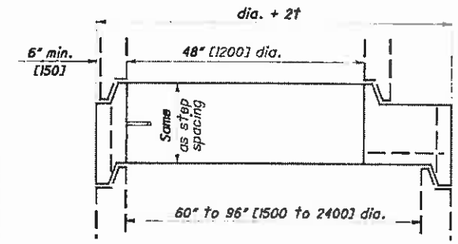

FLAT SLAB TRANSITION

ONLY IF SPECIFIED
SEE NOTE 2

NOTES

MANHOLE NO. 3 W/__" BASE I.D. AND __" DIVERSION WEIR: Furnish manhole base with precast diversion weir or construct diversion weir from Structure Concrete, Class C or Brick and Masonry Units conforming to CMS 604. A bottom channel section for the manhole is not required when a diversion weir is specified on the plans.

Place diversion weir perpendicular to flow of inflowing trunk sewer. Dowel concrete or masonry units into the base of the manhole to a depth of 3" [75] using epoxy coated #4 reinforcing bars. Start dowels at the center of the diversion weir and space 16" [400] on center across the entire weir.

All materials and labor, including excavation and backfill, shall be paid for at the contract price for **ITEM 604 - MANHOLE NO. 3 WITH __" BASE I.D. AND __" DIVERSION WEIR.**

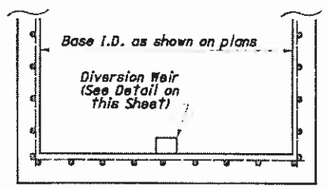

SECTION A-A
(NTS)

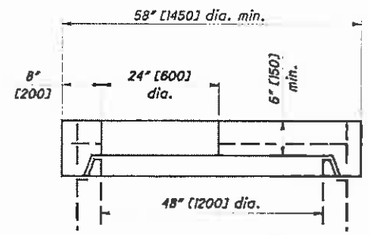

FLAT SLAB TOP

ONLY IF SPECIFIED
SEE NOTE 2

THE CITY'S STANDARD MANHOLE FOR SANITARY AND STORM SEWERS IS THE ODOT MH-3 WITH THE MODIFICATIONS NOTED. *SEE SHEET 3OF 3 FOR CITY'S MODIFICATION NOTES.*

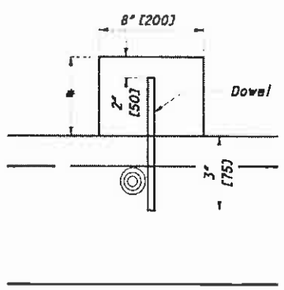

* Furnish weir height as shown in plans.

DIVERSION WEIR DETAIL
(NTS)

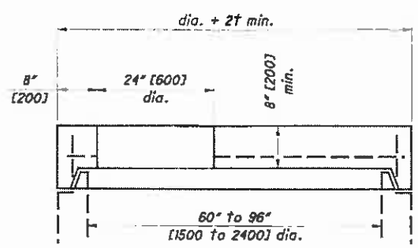

FLAT SLAB TOP

ONLY IF SPECIFIED
SEE NOTE 2

7-20-01
7-19-02
7-15-06
7-20-06

J. Stains

ALL METRIC DIMENSIONS [ ] IN BRACKETS [ ] ARE IN MILLIMETERS UNLESS OTHERWISE NOTED.

OFFICE OF STRUCTURAL ENGINEERING

MANHOLE No. 3

MH-1.2

2 / 2

OFFICE OF THE CITY ENGINEER
CANTON, OHIO
DANIEL J. MOEGLIN, P.E., CITY ENGINEER
2436 30th St. NE 44705 330-489-3381 www.cantonohio.gov/engineering

APPROVED DATE: JAN 2012

APPROVED BY: CDB, RMB, SLH

DRAWING FILE NAME: **ce_10.dwg**

REVISIONS

DESCRIPTION	DATE	BY

STANDARD DRAWING NO. 10

PRECAST STORM OR SANITARY MANHOLE

SHEET 2 OF 3

CANTON CONSTRUCTION STANDARDS NOTES FOR MODIFIED ODOT MANHOLE 3 (SCD MH-1.2)

NOTE 1. LIFT HOLES INSIDE THE MANHOLES MUST BE SEALED WITH GROUT.

NOTE 2. TOP AND TRANSITION SECTIONS MUST BE ECCENTRIC CONE ONLY. USE FLAT SLAB FOR SHALLOW MANHOLE APPLICATIONS OR SPECIAL CIRCUMSTANCES AS DIRECTED BY THE CITY.

NOTE 3. 6" EXTENDED BASE IS STANDARD FOR ALL SANITARY AND STORM MANHOLES. SET MANHOLE BASE ON 6" OF AASHTO M 43 NO. 56, 57, OR 62 CRUSHED STONE SET ON UNDISTURBED EARTH.

NOTE 4. PIPE CONNECTIONS INTO THE MANHOLES MUST NOT EXTEND INTO THE MANHOLE MORE THAN 2" AT THE SIDES OF THE PIPE AT THE SPRING-LINE OF SAID PIPE.

SANITARY CONNECTIONS
SANITARY SEWER PIPE INLETS, WITH FLOWLINES MORE THAN 2' HIGHER THAN THE CHANNEL BENCH MUST BE OUTSIDE DROP CONNECTIONS. DROP CONNECTIONS MUST BE FABRICATED AND CAST INTEGRALLY WITH THE MANHOLE SECTIONS OR INSTALLED PER CITY STANDARD DWG. 11, OUTSIDE DROP CONNECTION FOR SANITARY MANHOLES. NO INSIDE DROPS PERMITTED FOR PRIVATE SEWER CONNECTIONS. INSIDE DROP FOR CITY-OWNED SEWERS ARE SUBJECT TO THE CITY ENGINEER'S APPROVAL.

SANITARY PIPE INLETS MUST BE FLUMED OVER THE BENCH, DIRECTING FLOW INTO THE CHANNEL, USING CONCRETE AND/OR CLAY SEWER BRICK AND MORTAR.

CAST OPENINGS MUST BE THE OUTSIDE DIAMETER OF THE PIPE PLUS 2 INCHES WITH A BUTYL RUBBER A-LOK, X-CEL GASKET, OR APPROVED EQUAL.

CORED OPENINGS MUST BE MACHINE CORED, THE OPENING SHALL BE PER PIPE-TO-MANHOLE CONNECTOR SPECS. USE "KOR-N-SEAL" FLEXIBLE PIPE-TO-MANHOLE CONNECTOR WITH STAINLESS WEDGE ASSEMBLY OR APPROVED EQUAL CONFORMING TO ASTM C-930 OR ASTM C-923.

STORM CONNECTION
OPENINGS FOR STORM PIPE INLETS MAY BE CAST OR MACHINE CORED. OPENINGS SHALL NOT EXCEED THE O.D. OF PIPE + 2". MAKE WATER-TIGHT JOINTS WITH NON-SHRINK CEMENT OR CLASS 'C' CONCRETE APPLIED FROM INSIDE AND OUTSIDE OF MANHOLE.

NOTE 5. STEPS SHALL BE 1/2" STEEL REINFORCED POLYPROPYLENE STEPS 12" W X 5-3/4" BY AMERICAN STEP CO., INC. OR APPROVED EQUAL, MEETING ASTM 478.

FRAMES AND COVER SHALL CONFORM WITH CITY OF CANTON STD. DWG. NO. 12.

NOTE 6. GRADE RINGS FOR NEW MANHOLES MAY BE PRECAST CONCRETE, RUBBER COMPOSITE, OR CLAY BRICK AND MORTAR. CONCRETE BRICK IS NOT PERMITTED.

HEIGHT OF GRADE RINGS COLLECTIVELY SHALL NOT EXCEED 12".

PRECAST CONCRETE GRADE RINGS MUST BE REINFORCED CLASS 'C' CONCRETE AND CONNECTED USING TWO CONCENTRIC RINGS OF 1/2" TO 1" BEADS OF BUTYL RUBBER SEALANT CON-SEAL OR APPROVED EQUAL. SEAL OUTSIDE JOINTS WITH 1/2" NON SHRINK CEMENT PLASTER.

RUBBER COMPOSITE GRADE RINGS MUST BE "INFRA-RISER" BY EJIW OR APPROVED EQUAL, AND CONNECTED USING TWO PARALLEL BEADS OF POLY-SEALANT ADHESIVE PER MANUFACTURER RECOMMENDATION. RUBBER COMPOSITE GRADE RINGS HEIGHT MUST NOT EXCEED 3" AND MUST BE PLACED DIRECTLY UNDER MANHOLE FRAME.

BRICK AND MORTAR RINGS MUST BE BELDEN BRICK, FINE GRIND, ASTM C32-90, OR APPROVED EQUAL WITH HIGH STRENGTH, AIR ENTRAINED, MORTAR. SEAL OUTSIDE JOINTS WITH 1/2" NON SHRINK CEMENT PLASTER.

USE TWO PARALLEL 3/4" BEADS OF BUTYL RUBBER SEALANT CON-SEAL OR APPROVED EQUAL, BETWEEN GRADE RINGS OF DIFFERENT MATERIAL AND BETWEEN GRADE RINGS AND MANHOLE FRAME.

NOTE 7. FOR BACKFILL MATERIAL AND COMPACTION, AND ROCK EXCAVATION, IF APPLICABLE, REFER TO CITY STD.DWG. NO. 19.

NOTE 8. SANITARY MANHOLES TO BE TESTED ACCORDING TO CITY ENGINEER'S SPECIFICATION 04-01 (NEGATIVE AIR PRESSURE TEST).

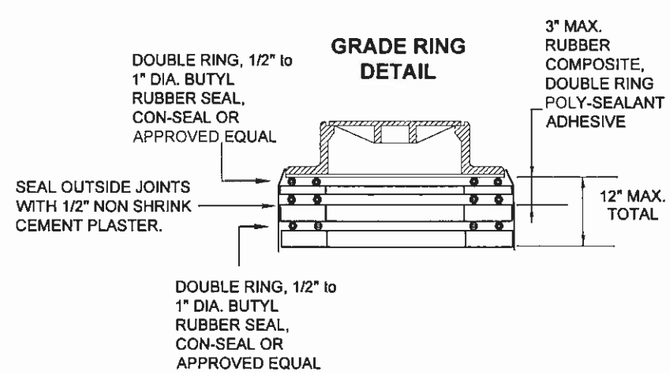

OPTIONAL MANHOLE BID ITEMS

ITEM	QTY.	UNIT	DESCRIPTION OPTION "A"
604		V.F.	MH WATERPROOFING, COAL TAR, A.P.P.

IF REQUESTED BY THE CITY ENGINEER, OR SPECIFIED IN THE PLAN, THE CONTRACTOR SHALL PROVIDE UNIT PRICE FOR WATERPROOFING THE EXTERIOR OF DESIGNATED MANHOLES. THIS ITEM IS "CITY OPTIONAL" AND THE PRICE IS PAID PER VERTICAL FOOT OF EACH MANHOLE WATERPROOFED AS DIRECTED BY THE ENGINEER. THIS OPTION IS A CONTINGENCY BID ITEM UNLESS SPECIFIED OTHERWISE.

APPLY IN THE FIELD A COAL TAR EPOXY TO THE OUTSIDE OF THE MANHOLE PER MANUFACTURER'S SPECIFICATIONS AND INSTRUCTIONS FROM THE TOP OF THE EXTENDED BASE TO THE BOTTOM OF THE MANHOLE COVER CASTING.

ITEM	QTY.	UNIT	DESCRIPTION OPTION "B"
604		EACH	NEW MH, POLYMER LINING, A.P.P.
604		V.F.	EXISTING MH, POLYMER LINING, A.P.P.

IF REQUESTED BY THE CITY ENGINEER, OR SPECIFIED IN THE PLAN, THE CONTRACTOR SHALL PROVIDE UNIT PRICE FOR CORROSION RESISTANT POLYMER LININGS AS DESIGNATED. THIS ITEM IS "CITY OPTIONAL" AND THE PRICE IS PAID PER VERTICAL FOOT OR PER EACH MANHOLE LINED AS DIRECTED BY THE ENGINEER. THE UNIT COST FOR THIS ITEM INCLUDES ALL COSTS FOR LABOR, MATERIALS, EQUIPMENT AND INCIDENTALS REQUIRED FOR SUPPLYING AND INSTALLING THE LININGS INCLUDING THE COST FOR BYPASSING EXISTING SEWER FLOWS FOR THE DURATION OF THE INSTALLATION AND CURING TIME AS SPECIFIED. THIS OPTION IS INCLUDED AS A CONTINGENCY BID ITEM. UNLESS SPECIFIED OTHERWISE.

APPLY IN THE FIELD A CORROSION RESISTANT POLYMER LINING (PLASITE 5371 BY CARBOLINE OR APPROVED EQUAL) TO THE INSIDE OF THE NEW OR EXISTING MANHOLE PER MANUFACTURER'S SPECIFICATIONS AND INSTRUCTIONS. APPLY FROM THE TOP OF THE BENCH TO THE BOTTOM OF THE MANHOLE COVER CASTING.

FOR EXISTING MANHOLES, PRIOR TO POLYMER LINING APPLICATION, RESTORE INSIDE WALLS AS PER LINING MANUFACTURERER'S RECOMMENDATIONS OR AS DIRECTED BY THE CITY ENGINEER.

THE CITY'S STANDARD MANHOLE FOR SANITARY AND STORM SEWERS IS THE ODOT MH-3 WITH THE MODIFICATIONS NOTED.

OFFICE OF THE CITY ENGINEER
CANTON, OHIO
DANIEL J. MOEGLIN, P.E., CITY ENGINEER
2436 30th St. NE 44705 330-489-3381 www.cantonohio.gov/engineering

APPROVED DATE: JAN 2012

APPROVED BY: CDB, RMB, SLH

DRAWING FILE NAME: **ce_10.dwg**

REVISIONS		
DESCRIPTION	DATE	BY

STANDARD DRAWING NO. 10

PRECAST STORM OR SANITARY MANHOLE

SHEET 3 OF 3

TOP OF MANHOLE COVER

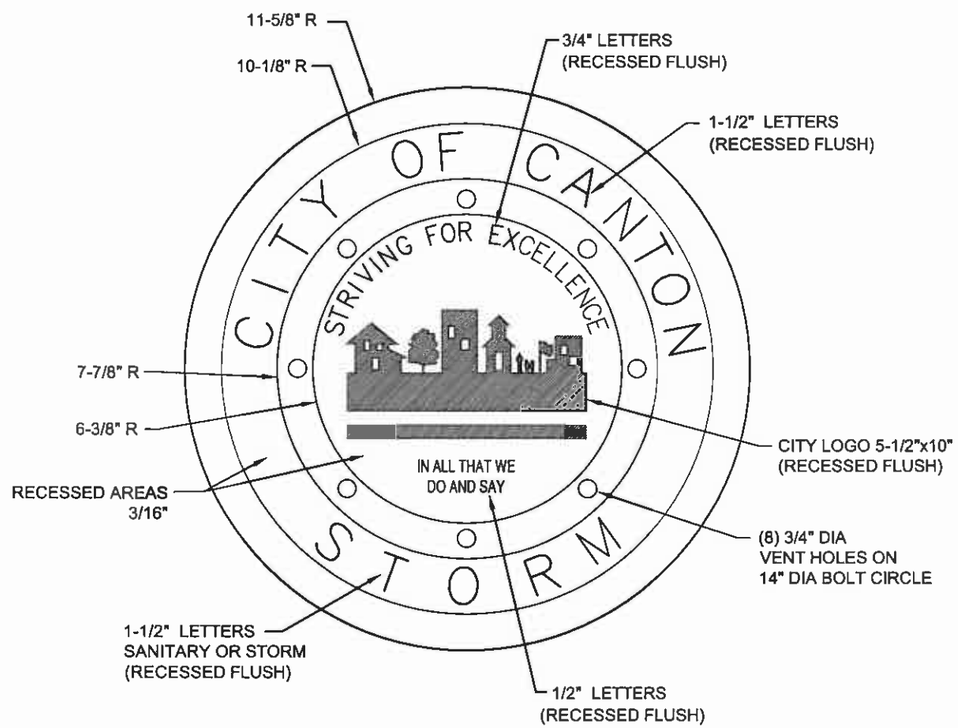

NOTES:

1. COVER AND FRAME TO BE CAST OF GRAY IRON IN COMPLIANCE WITH ASTM SPEC. ASTM A-48 CLASS 35. CASTINGS SHALL BE OF THE HEAVY DUTY RATING.
2. EAST JORDAN 1850 B COVER (PRODUCT NO. 185026) AND 1850 FRAME, OR NEENAH R-1654 FRAME AND LID, OR EQUAL APPROVED BY CITY ENGINEER.
3. MACHINE BEARING SURFACES BETWEEN LID AND FRAME.
4. CONTACT CITY ENGINEER FOR CAD DRAWING OF CITY LOGO.

OFFICE OF THE CITY ENGINEER
CANTON, OHIO
DANIEL J. MOEGLIN, P.E., CITY ENGINEER
2436 30th St. NE 44705 330-489-3381 www.cantonohio.gov/engineering

APPROVED DATE: JAN 2012

APPROVED BY: CDB, RMB, SLH

DRAWING FILE NAME: **ce_12.dwg**

REVISIONS		
DESCRIPTION	DATE	BY

STANDARD DRAWING NO. 12

MANHOLE COVER

SHEET 1 OF 1

NOTES:

1. **BEDDING:**

MATERIALS SHALL BE AASHTO M 43 NO. 56, 57, OR 67 CRUSHED STONE. NO ALTERNATES UNLESS APPROVED BY THE CITY ENGINEER. PRIVATE UTILITIES MAY TYPICALLY PROVIDE ALTERNATIVE BEDDING MATERIAL AS APPROVED BY THE CITY ENGINEER.

BEDDING WIDTH TABLE

PIPE TYPE	MIN. WIDTH, TYP.	MAX. WIDTH, TYP.
NON-RIGID PIPE (PVC, HDPE, CMP, ALUMINUM)	**PIPE I.D. x 1.25 + 1'-0"**	**PIPE O.D. + 2'-0"**
RIGID PIPE (CONC., VIT. CLAY, DUCTILE IRON)	**PIPE I.D. x 1.33**	**PIPE O.D. + 2'-0"**

CENTER PIPE HORIZONTALLY WITHIN BEDDING AREA. ANY DEVIATION TO TYPICAL BEDDING REQUIREMENTS ARE SUBJECT TO THE DISCRETION OF THE CITY ENGINEER.

THE BEDDING LIMITS SHOWN APPLY IN ALL CASES *EXCEPT* FOR WHEN PIPE MANUFACTURER SPECIFIES A BEDDING WIDTH DIFFERENT FROM THAT SHOWN AND THE CITY ENGINEER PERMITS SAME.

2. **BACKFILL:**

BACKFILL WITHIN THE PUBLIC STREET R/W:

MATERIALS SHALL BE ODOT 703.11, TYPE '1' GRANULAR MATERIAL (304, 411, or 617 AGGREGATE GRADATION) OR TYPE '2' GRANULAR MATERIAL, OR ODOT 613, LOW STRENGTH MORTAR; DEVIATIONS FROM THIS ARE AS FOLLOWS:

A) NO FOUNDRY SAND OR SLAG IS PERMITTED.

B) ALTERNATE GRANULAR MATERIAL SHALL BE PERMITTED ONLY WITH THE SUPPLEMENTAL APPROVAL OF THE CITY ENGINEER. TO PETITION FOR SUCH SUPPLEMENTAL APPROVAL, THE DEVELOPER/CONTRACTOR SHALL SUBMIT IN WRITING THE FOLLOWING:
   * SOURCE OF THE ALTERNATE BACKFILL MATERIAL.
   * GRADATION REPORT IN ACCORDANCE WITH AASHTO T II AND T 27.
   * PROCTOR CURVE ANALYSIS IN ACCORDANCE WITH ASTM D 698.
   * PROPOSED COMPACTION METHOD.

   THE CITY ENGINEER RESERVES THE RIGHT TO REFUSE ANY ALTERNATE BACKFILL MATERIAL, REGARDLESS OF APPROVAL OF SIMILAR MATERIAL ON A PREVIOUS PROJECT.

   THE CITY ENGINEER FURTHER RESERVES THE RIGHT TO REFUSE ANY ALTERNATE BACKFILL MATERIAL THE CITY FINDS NOT CONSISTENT WITH THE APPROVED SOURCE, GRADATION REPORT, PROCTOR REPORT, OR COMPACTION METHOD.

C) ODOT 703.11, TYPE 2, OR ALTERNATE MATERIALS ARE NOT PERMITTED WITHIN 4 FEET OF THE TRENCH SURFACE, UNLESS OTHERWISE APPROVED BY THE CITY ENGINEER.

BACKFILL OUTSIDE OF THE PUBLIC STREET R/W:
FOLLOW MATERIAL AND METHODS FOR BACKFILL IN ACCORDANCE WITH ODOT 603.

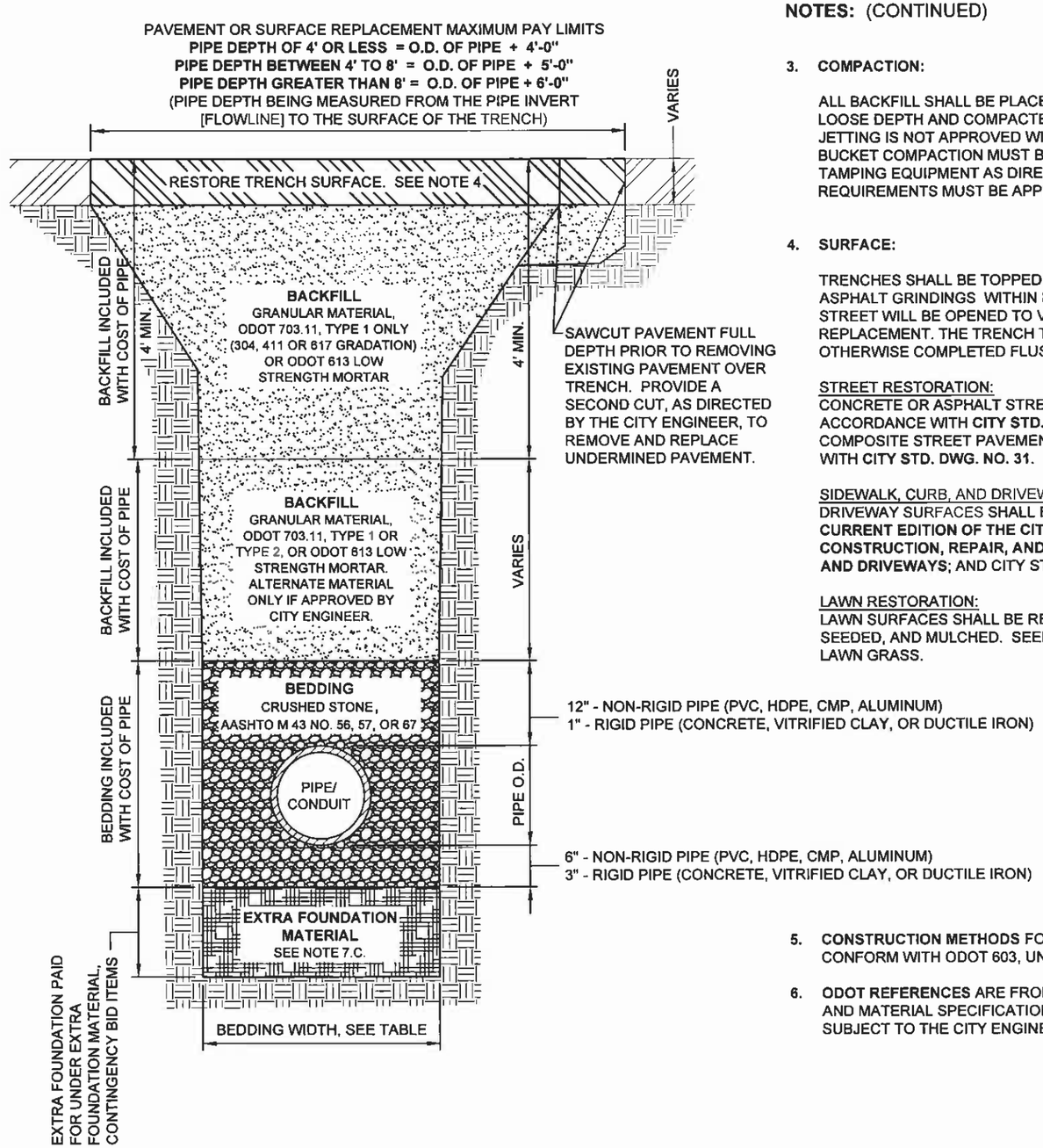

NOTES: (CONTINUED)

3. **COMPACTION:**

ALL BACKFILL SHALL BE PLACED IN LAYERS NOT TO EXCEED 12-INCHES LOOSE DEPTH AND COMPACTED BY APPROVED MECHANICAL MEANS. JETTING IS NOT APPROVED WITHOUT THE CITY ENGINEER'S APPROVAL. BUCKET COMPACTION MUST BE SUPPLEMENTED WITH VIBRATION OR TAMPING EQUIPMENT AS DIRECTED. ANY MODIFICATIONS TO THESE REQUIREMENTS MUST BE APPROVED BY THE CITY ENGINEER.

4. **SURFACE:**

TRENCHES SHALL BE TOPPED WITH 4" OF ODOT 304 LIMESTONE OR ASPHALT GRINDINGS WITHIN EXISTING STREET PAVEMENTS WHEN THE STREET WILL BE OPENED TO VEHICULAR TRAFFIC PRIOR TO PAVEMENT REPLACEMENT. THE TRENCH TOPPING MATERIAL SHALL BE ROLLED OR OTHERWISE COMPLETED FLUSH WITH THE ADJOINING PAVEMENT.

STREET RESTORATION:
CONCRETE OR ASPHALT STREET PAVEMENT SHALL BE REPLACED IN ACCORDANCE WITH **CITY STD. DWG. NO. 32.** BRICK OR ASPHALT-BRICK COMPOSITE STREET PAVEMENT SHALL BE REPLACED IN ACCORDANCE WITH **CITY STD. DWG. NO. 31.**

SIDEWALK, CURB, AND DRIVEWAY RESTORATION:
DRIVEWAY SURFACES SHALL BE REPLACED IN ACCORDANCE WITH THE **CURRENT EDITION OF THE CITY OF CANTON SPECIFICATIONS FOR THE CONSTRUCTION, REPAIR, AND REPLACEMENT OF SIDEWALKS, CURBS, AND DRIVEWAYS**; AND CITY STD. DWG. NOS. 28 THRU 33.

LAWN RESTORATION:
LAWN SURFACES SHALL BE REPLACED WITH A MINIMUM OF 4" TOPSOIL, SEEDED, AND MULCHED. SEED MIX SHALL CONFORM TO ADJOINING LAWN GRASS.

5. **CONSTRUCTION METHODS** FOR BEDDING AND BACKFILL SHALL CONFORM WITH ODOT 603, UNLESS STATED OTHERWISE HEREIN.

6. **ODOT REFERENCES** ARE FROM THE CURRENT ODOT CONSTRUCTION AND MATERIAL SPECIFICATIONS. ANY DISCREPANCIES SHALL BE SUBJECT TO THE CITY ENGINEER'S DISCRETION.

OFFICE OF THE CITY ENGINEER
CANTON, OHIO
DANIEL J. MOEGLIN, P.E., CITY ENGINEER
2436 30th St. NE 44705 330-489-3381 www.cantonohio.gov/engineering

APPROVED DATE: JAN 2012

APPROVED BY: CDB, RMB, SLH

DRAWING FILE NAME: **ce_19.dwg**

REVISIONS

DESCRIPTION	DATE	BY
REVISIONS TO NOTES 7 & 8	6/4/2012	CDB

STANDARD DRAWING NO. 19

UTILITY TRENCH REQUIREMENTS

NOTES: (CONTINUED)

7. **PAY LIMITS**

A) **BEDDING AND BACKFILL** IS INCLUDED IN WITH THE COST OF PIPE UNLESS BID OTHERWISE.

B) **PAVEMENT RESTORATION:** THE WIDTH MEASUREMENT OVER THE TRENCH FOR PAVEMENT RESTORATION SHALL NOT EXCEED THE OUTSIDE DIAMETER (O.D.) OF PIPE PLUS A SET MEASUREMENT DEPENDENT ON DEPTH OF PIPE. AREA MEASUREMENTS AT MANHOLE AND CATCH BASIN STRUCTURES SHALL NOT EXCEED THE AREA OF THE BASE OF THE STRUCTURE + 3'-0" OFFSET AREA AROUND THE STRUCTURE'S BASE.

C) **EXTRA FOUNDATION MATERIAL:**

WHEN IN THE OPINION OF THE CITY ENGINEER, SOFT/UNSTABLE MATERIALS ARE ENCOUNTERED WHICH ARE UNSUITABLE FOR BEDDING FOUNDATION, SAID MATERIAL SHALL BE REMOVED BY THE CONTRACTOR TO THE DEPTH DIRECTED BY THE ENGINEER AND REPLACED WITH SUITABLE MATERIAL.

FOR CITY PROJECTS, THE PAYABLE WIDTH OF THE EXTRA FOUNDATION MATERIAL SHALL NOT EXCEED THE LESSER OF THE APPLICABLE MINIMUM OR MAXIMUM TYPICAL BEDDING WIDTH, AS NOTED ON SHEET 1 OF STD. DWG. NO. 19. THE CONTRACTOR SHALL BE PAID FOR OVER-EXCAVATION AND BEDDING FOUNDATION MATERIAL UNDER THE CONTINGENCY BID ITEMS FOR EXTRA FOUNDATION MATERIAL.

FOR PRIVATE WORK, ALL COSTS ARE AT THE OWNER'S EXPENSE.

EXTRA FOUNDATION MATERIAL, OPTION A, B, C, & D, MAY BE USED IN ANY COMBINATION AS DIRECTED BY THE CITY ENGINEER:

OPTION A: CRUSHED STONE, AASHTO M 43 NO. 1 AND/OR 2

OPTION B: CRUSHED STONE, AASHTO M 43 NO. 56, 57, OR 67

OPTION C: ODOT 703.11, TYPE 1 (304, 411 OR 617 GRADATION)

OPTION D: TENSAR GEOGRID T1100, OR APPROVED EQUAL

EXTRA FOUNDATION MATERIAL, CONTINGENCY BID ITEMS

ITEM	QTY.	UNIT	DESCRIPTION
603		C.Y.	EXTRA FOUNDATION, OPTION A (#1,#2 STONE)
603		C.Y.	EXTRA FOUNDATION, OPTION B (#56,57,67 STONE)
603		C.Y.	EXTRA FOUNDATION, OPTION C (304,411,617)
603		S.F.	EXTRA FOUNDATION, OPTION D (GEOGRID)

NOTES: (CONTINUED)

8. **EXCAVATION OF ROCK OR BURIED/ABANDONED CONCRETE STRUCTURE REMOVAL**

EXCAVATION FOR NEW MANHOLES AND CATCH BASINS, UNLESS OTHERWISE SPECIFIED OR SHOWN ON CONSTRUCTION PLANS, SHALL BE MEASURED BETWEEN VERTICAL PLANES ONE (1) FOOT BEYOND THE OUTSIDE EDGE OF THE FOUNDATION OF THE STRUCTURES ON ALL SIDES, AND PARALLEL THERETO, AND FROM THE SURFACE OF THE ROCK TO THE BOTTOM OF THE ROCK OR THE NEAT LINES OF THE BOTTOM OF THE STRUCTURES PLUS THE DEPTH OF THE BASE MATERIAL, USE THE MEASUREMENT WHICH IS LESSER.

EXCAVATION FOR NEW PIPES, UNLESS OTHERWISE SPECIFIED OR SHOWN ON CONSTRUCTION PLANS, SHALL BE MEASURED BETWEEN TRENCH WALLS (NOT TO EXCEED PIPE O.D. + 18", AND FROM THE SURFACE OF THE ROCK TO THE BOTTOM OF THE ROCK OR THE BOTTOM OF THE PIPE BEDDING, USE THE MEASUREMENT WHICH IS LESSER.

EXCAVATION OF BURIED AND ABANDONED CONCRETE STRUCTURES SHALL BE MEASURED IN THE SAME MANNER AS ROCK REMOVAL.

FOR CITY PROJECTS, THE CONTRACTOR SHALL BE PAID FOR ROCK REMOVAL AND CONCRETE STRUCTURE REMOVAL UNDER THE CONTINGENCY BID ITEMS FOR ROCK OR CONCRETE STRUCTURE REMOVAL. IF A CONTINGENCY BID ITEM IS NOT INCLUDED IN THE BID PROPOSAL, THE CONTACTOR MAY SUBMIT A PROPOSAL (PRIOR TO WORK BEING STARTED) TO THE CITY ENGINEER FOR REVIEW AND APPROVAL.

FOR PRIVATE WORK, ALL COSTS ARE AT THE OWNER'S EXPENSE.

ROCK AND BURIED & ABANDONED CONCRETE STRUCTURE REMOVAL, CONTINGENCY BID ITEMS

ITEM	QTY.	UNIT	DESCRIPTION
603		C.Y.	ROCK REMOVAL
603		C.Y.	CONCRETE STRUCTURE REMOVAL

ROCK EXCAVATION
NEW PIPES

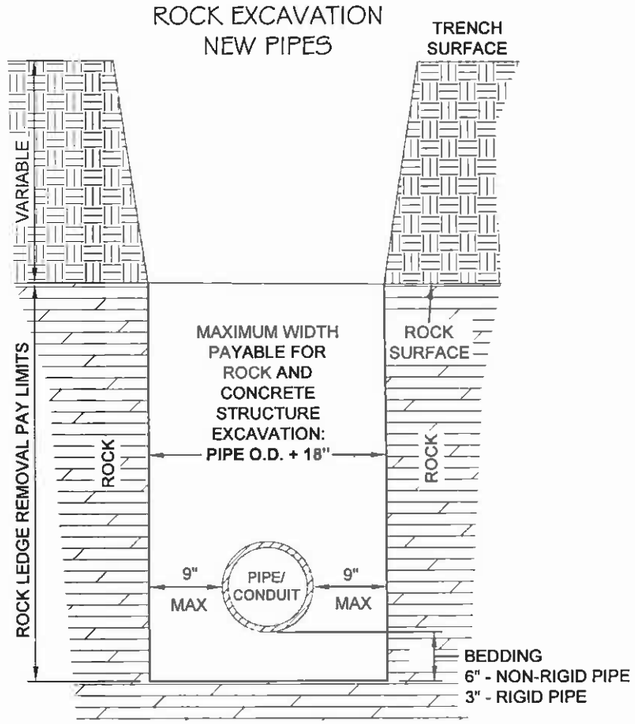

ROCK EXCAVATION
MANHOLES AND
CATCH BASINS

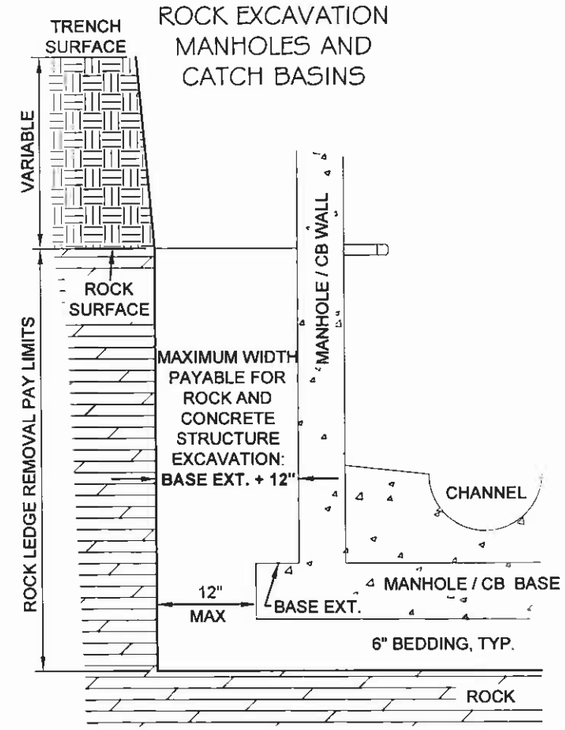

OFFICE OF THE CITY ENGINEER
CANTON, OHIO
DANIEL J. MOEGLIN, P.E., CITY ENGINEER
2436 30th St. NE 44705 330-489-3381 www.cantonohio.gov/engineering

APPROVED DATE: JAN 2012

APPROVED BY: CDB, RMB, SLH

DRAWING FILE NAME: **ce_19.dwg**

REVISIONS

DESCRIPTION	DATE	BY
REVISIONS TO NOTES 7 & 8	6/4/2012	CDB

STANDARD DRAWING NO. 19

UTILITY TRENCH REQUIREMENTS

SHEET 2 OF 2

PLAN VIEW:
NOT TO SCALE

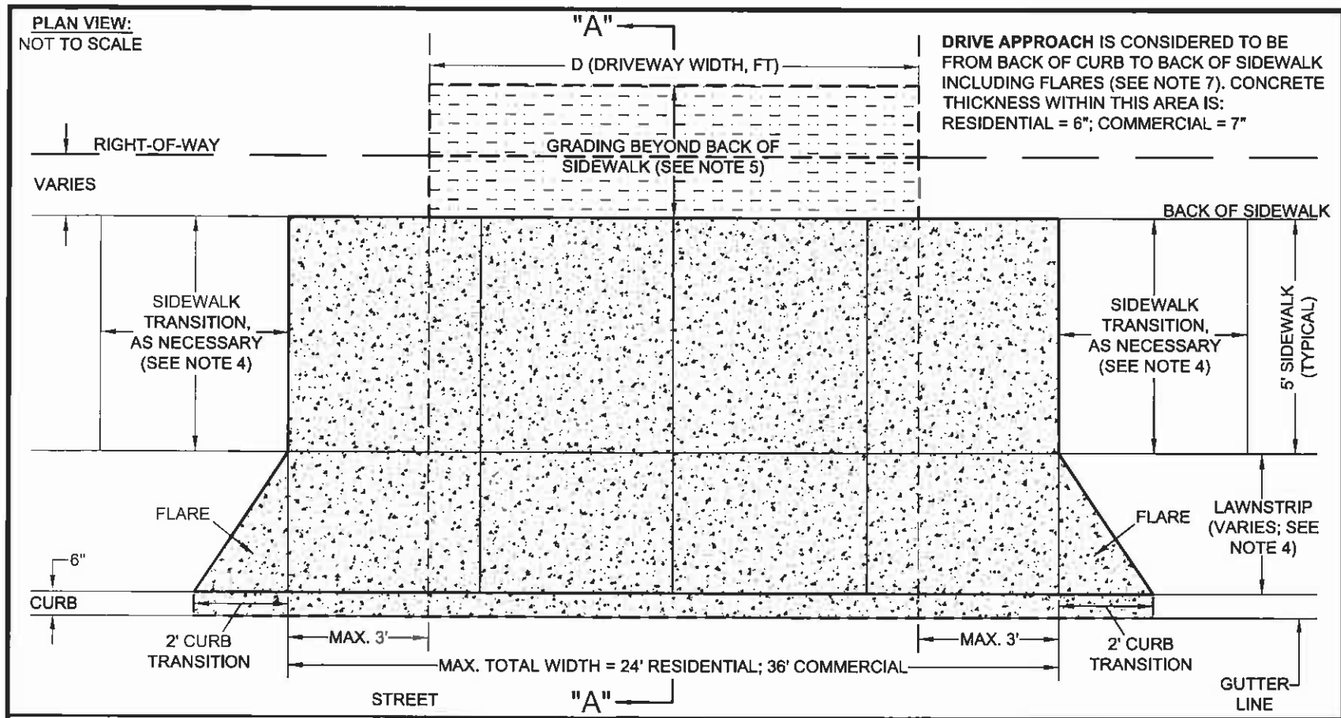

DRIVE APPROACH IS CONSIDERED TO BE FROM BACK OF CURB TO BACK OF SIDEWALK INCLUDING FLARES (SEE NOTE 7). CONCRETE THICKNESS WITHIN THIS AREA IS: RESIDENTIAL = 6"; COMMERCIAL = 7"

NOTES:

1. SIDEWALKS, CURBS, AND DRIVEWAYS SHALL BE IN ACCORDANCE WITH THE CURRENT EDITION OF THE CITY OF CANTON SPECIFICATIONS FOR THE CONSTRUCTION, REPAIR, AND REPLACEMENT OF SIDEWALKS, CURBS, AND DRIVEWAYS.
2. ODOT REFERENCES ARE FROM THE CURRENT ODOT CONSTRUCTION AND MATERIAL SPECIFICATIONS. ANY DISCREPANCIES SHALL BE SUBJECT TO THE CITY'S ENGINEER'S DISCRETION.
3. ALTERNATIVE DESIGNS MAY BE APPROVED OR REQUIRED BY THE CITY ENGINEER FOR COMMERCIAL DRIVES.
4. WHEN LAWNSTRIP WIDTH IS LESS THAN 3 FEET, LOWER THE DRIVE APPROACH/SIDEWALK PROFILE SO THAT DRIVE APPROACH CROSS SLOPE IS CONSTANT ¼" PER FOOT FROM BACK OF CURB TO BACK OF SIDEWALK. CONSTRUCT SIDEWALK TRANSITIONS WITH A MAXIMUM 12:1 LONGITUDONAL SLOPE (PARALLEL TO STREET).
5. GRADE AS APPROPRIATE OR IN ACCORDANCE WITH PLANS TO PROVIDE ADEQUATE TRANSITION TO DRIVEWAY AND YARD. FOR CITY PROJECTS, DRIVE MATERIALS AND BUILDUP SHALL MATCH EXISTING. GRADING AND MATERIALS SHALL BE PAID UNDER APPROPRIATE DRIVE RESTORATION ITEMS, ETC.
6. FOR CITY PROJECTS AND REIMBURSEMENT PROGRAM, DRIVE APPROACH PAY LIMITS SHALL CORRESPOND WITH DRIVE APPROACH LIMITS AS INDICATED HEREIN. IF SIDEWALK TRANSITIONS ARE CONSTRUCTED (SEE NOTE 5), PAY LIMITS SHALL BE EXTENDED TO INCLUDE THE COST OF THE SIDEWALK TRANSITIONS. DRIVE APPROACHES AND PAY LIMITS DO NOT INCLUDE ANY CONCRETE PORTIONS OF DRIVE BEYOND BACK OF SIDEWALK OR ANY OTHER WORK NOT DIRECTLY RELATED TO THE CONSTRUCTION OF THE DRIVE APPROACH. THE COSTS ASSOCIATED WITH EXCAVATION, FORMING, GRADING, AND RESTORATION DIRECTLY RELATED TO THE DRIVE APPROACH AS WELL AS THE COSTS FOR THE CURB CUT/DROP CURB ARE INCIDENTAL TO THE COST OF THE DRIVE APPROACH.
7. REFER TO CITY STANDARD DRAWING NO. 28 FOR DRIVE APPROACHES WITH SIDEWALK AGAINST CURB. CONNECT APRON TO CURB WITH DOWELS OR WIRE MESH.
8. PLACE 1/2" EXPANSION JOINTS AGAINST EXISTING CONCRETE DRIVES AND WALKS, BUILDING WALLS, AND OTHER FIXED OBJECTS.
9. WHEN THE LOCATION OF THE DRIVE APPROACH IS UNKNOWN AT THE TIME OF CURB CONSTRUCTION, THE DROP MAY BE SAW-CUT WITH THE CITY ENGINEER'S APPROVAL.
10. ANY MODIFICATIONS TO THESE STANDARDS ARE SUBJECT TO THE APPROVAL OF THE CITY ENGINEER.

PROFILE VIEW (ALONG CURB):
NOT TO SCALE

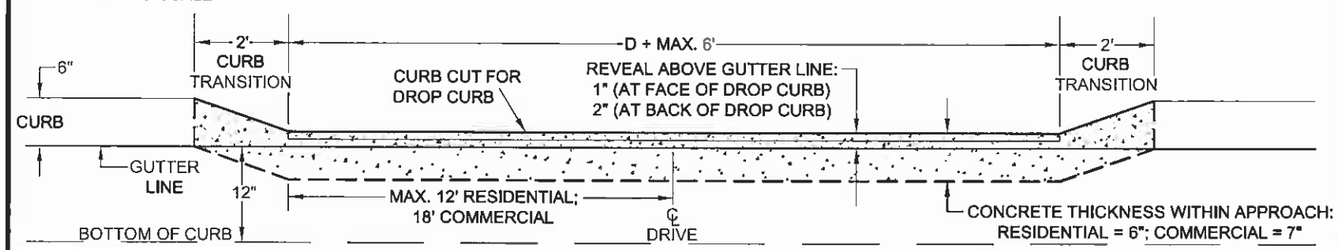

SECTION A-A:
NOT TO SCALE

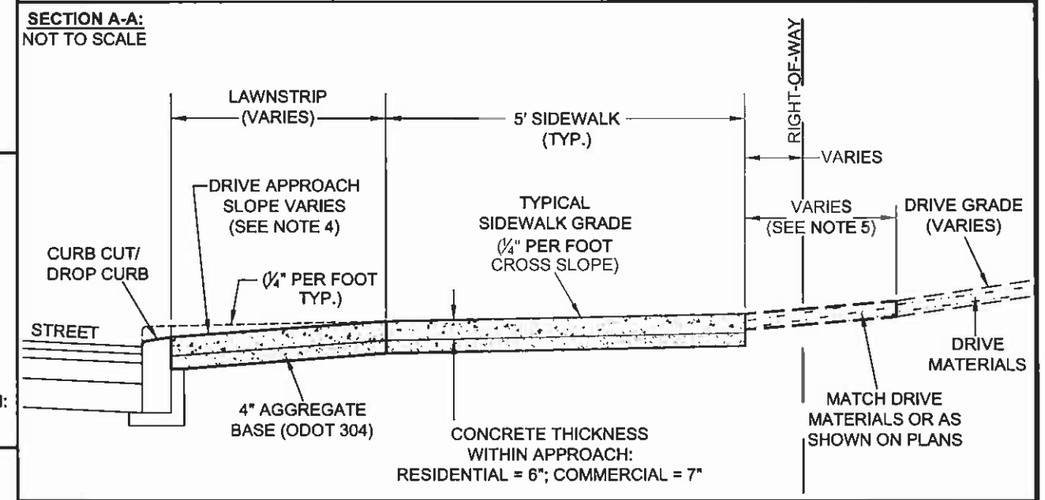

ISOMETRIC VIEW:
NOT TO SCALE

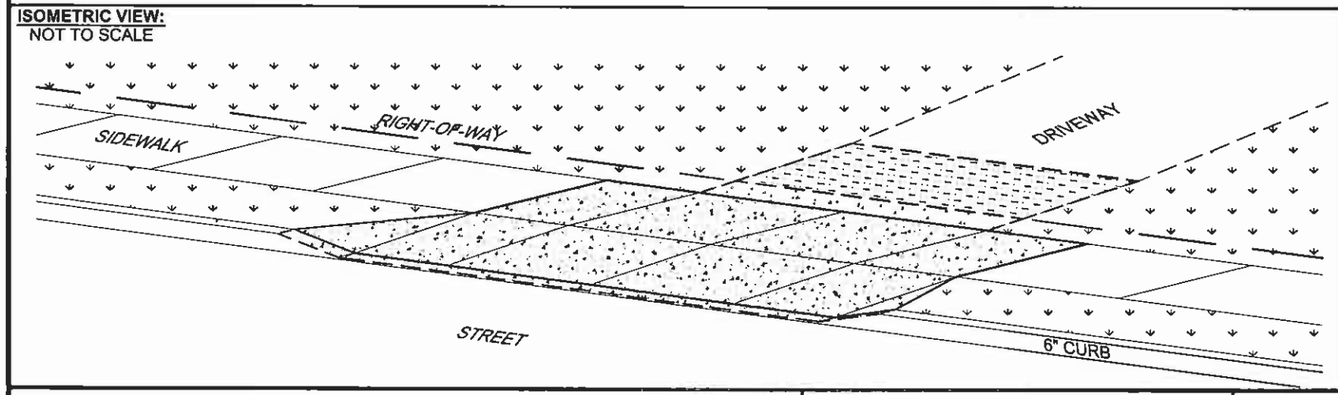

SECTION VIEW OF DROP CURB:
NOT TO SCALE

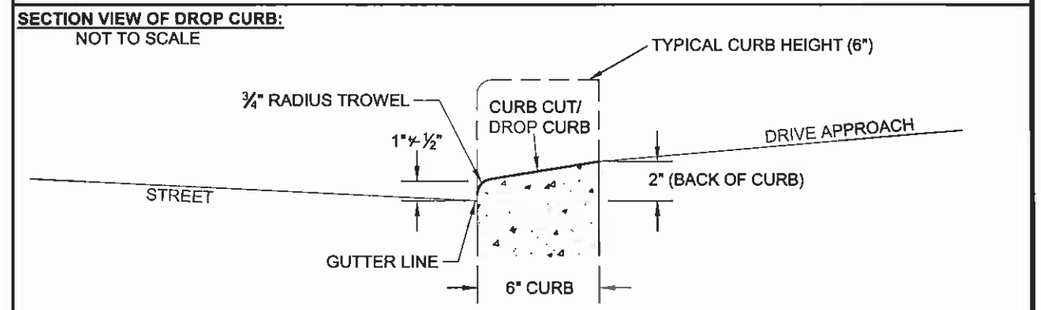

OFFICE OF THE CITY ENGINEER
CANTON, OHIO
DANIEL J. MOEGLIN, P.E., CITY ENGINEER
2436 30th St. NE 44705 330-489-3381 www.cantonohio.gov/engineering

APPROVED DATE: MAR. 2012

APPROVED BY: CDB, RMB

DRAWING FILE NAME: **ce_28.dwg**

REVISIONS

DESCRIPTION	DATE	BY
NOTE MODIFICATIONS	4/10/12	CDB

STANDARD DRAWING NO. 27

DRIVE APPROACH
WITH LAWNSTRIP BETWEEN SIDEWALK & CURB

SHEET 1 OF 1

PLAN VIEW:
NOT TO SCALE

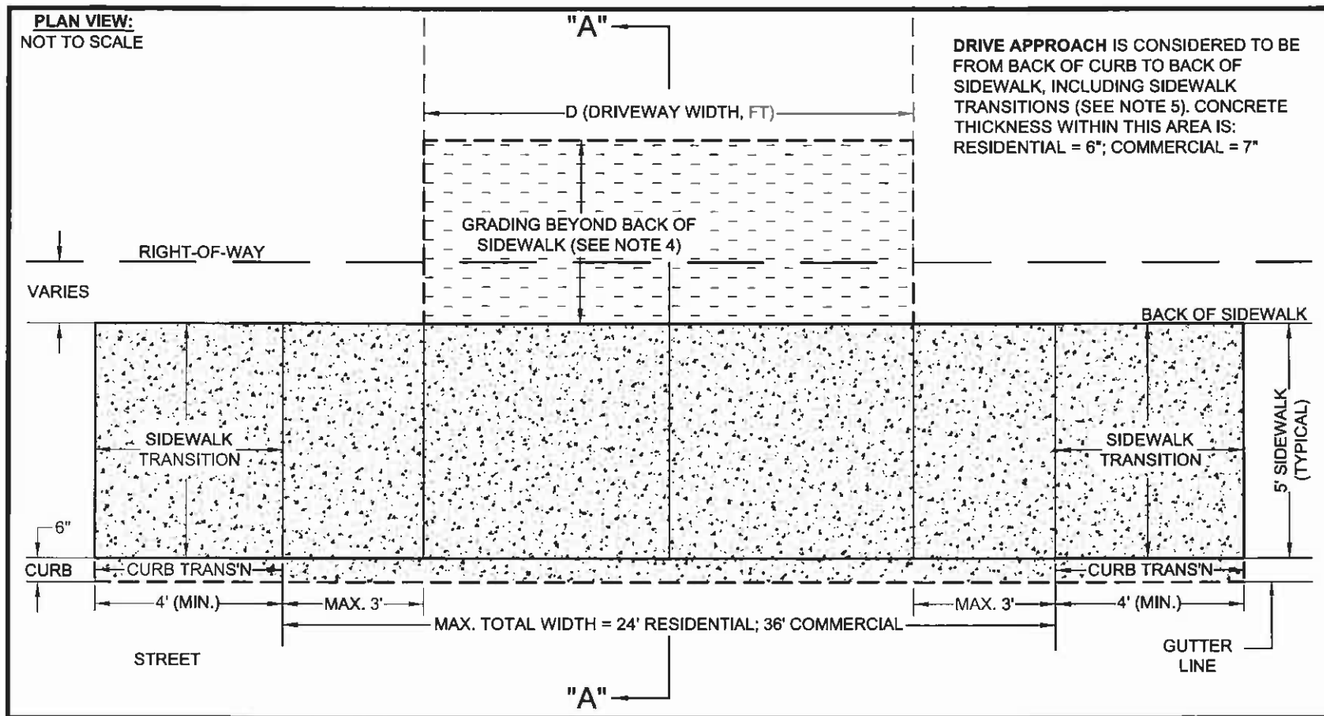

DRIVE APPROACH IS CONSIDERED TO BE FROM BACK OF CURB TO BACK OF SIDEWALK, INCLUDING SIDEWALK TRANSITIONS (SEE NOTE 5). CONCRETE THICKNESS WITHIN THIS AREA IS: RESIDENTIAL = 6"; COMMERCIAL = 7"

NOTES:

1. SIDEWALKS, CURBS, AND DRIVEWAYS SHALL BE IN ACCORDANCE WITH THE CURRENT EDITION OF THE CITY OF CANTON SPECIFICATIONS FOR THE CONSTRUCTION, REPAIR, AND REPLACEMENT OF SIDEWALKS, CURBS, AND DRIVEWAYS.
2. ODOT REFERENCES ARE FROM THE CURRENT ODOT CONSTRUCTION AND MATERIAL SPECIFICATIONS. ANY DISCREPANCIES SHALL BE SUBJECT TO THE CITY'S ENGINEER'S DISCRETION.
3. ALTERNATIVE DESIGNS MAY BE APPROVED OR REQUIRED BY THE CITY ENGINEER FOR COMMERCIAL DRIVES.
4. GRADE AS APPROPRIATE OR IN ACCORDANCE WITH PLANS TO PROVIDE ADEQUATE TRANSITION TO DRIVEWAY AND YARD. FOR CITY PROJECTS, GRADING AND MATERIALS SHALL BE PAID UNDER APPROPRIATE DRIVE RESTORATION ITEMS, ETC.
5. FOR CITY PROJECTS AND REIMBURSEMENT PROGRAM, DRIVE APPROACH PAY LIMITS SHALL CORRESPOND WITH DRIVE APPROACH LIMITS AS INDICATED HEREIN. DRIVE APPROACHES AND PAY LIMITS DO NOT INCLUDE FLARES OR ANY CONCRETE PORTION OF DRIVE BEYOND BACK OF SIDEWALK, OR ANY OTHER WORK NOT DIRECTLY RELATED TO THE CONSTRUCTION OF OF THE DRIVE APPROACH. THE COSTS ASSOCIATED WITH EXCAVATION, FORMING, GRADING, AND RESTORATION DIRECTLY RELATED TO THE DRIVE APPROACH AS WELL AS THE COSTS FOR THE CURB CUT/DROP CURB ARE INCIDENTAL TO THE COST OF THE DRIVE APPROACH.
6. DUE TO 1/4" PER FOOT CROSS SLOPE, BACK OF TYPICAL 5' SIDEWALK WITHIN APPROACH IS ONLY 3 ¼" ABOVE GUTTER LINE (EXCLUDING SIDEWALK TRANSITIONS). ALTERNATIVE DRIVE APPROACH OPTIONS MAY BE APPROVED OR REQUIRED WHEN DEPTH OF STORM WATER RUNOFF ALONG THE CURB IS ANTICIPATED TO RESULT IN EXCESSIVE PONDING WITHIN THE DRIVE APPROACH AREA OR CAUSE OTHER DRAINAGE PROBLEMS IN THE VICINITY.
7. REFER TO CITY STANDARD DRAWING NO. 29 FOR COMBINED CURB AND SIDEWALK DETAILS. CONNECT APRON TO CURB WITH DOWELS OR WIRE MESH.
8. PLACE 1/2" EXPANSION JOINTS AGAINST EXISTING CONCRETE DRIVES AND WALKS, BUILDING WALLS AND OTHER FIXED OBJECTS.
9. WHEN THE LOCATION OF THE DRIVE APPROACH IS UNKNOWN AT THE TIME OF CURB CONSTRUCTION, THE DROP MAY BE SAW-CUT WITH THE CITY ENGINEER'S APPROVAL.
10. ANY MODIFICATIONS TO THESE STANDARDS ARE SUBJECT TO THE APPROVAL OF THE CITY ENGINEER.

PROFILE VIEW (ALONG CURB):
NOT TO SCALE

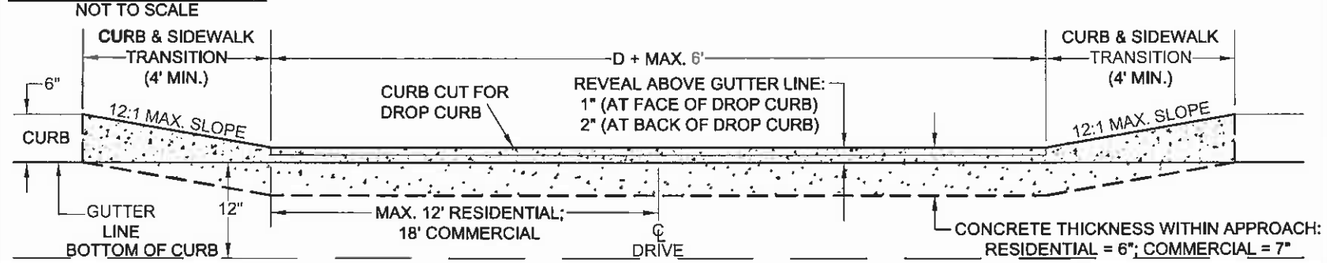

SECTION A-A:
NOT TO SCALE

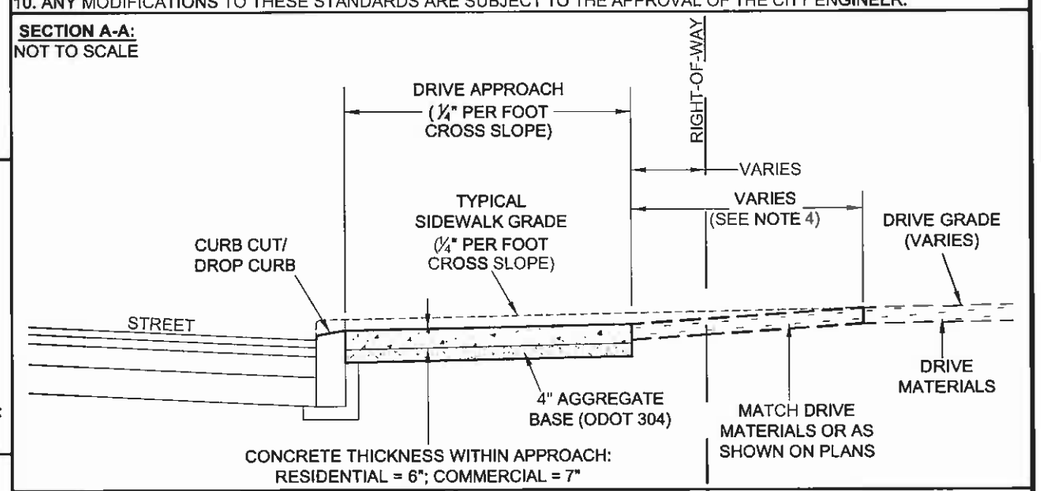

ISOMETRIC VIEW:
NOT TO SCALE

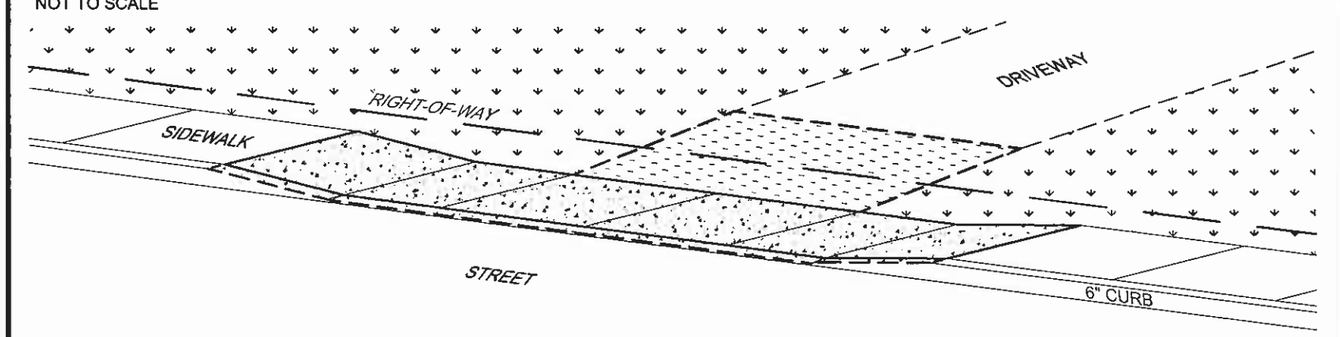

SECTION VIEW OF DROP CURB:
NOT TO SCALE

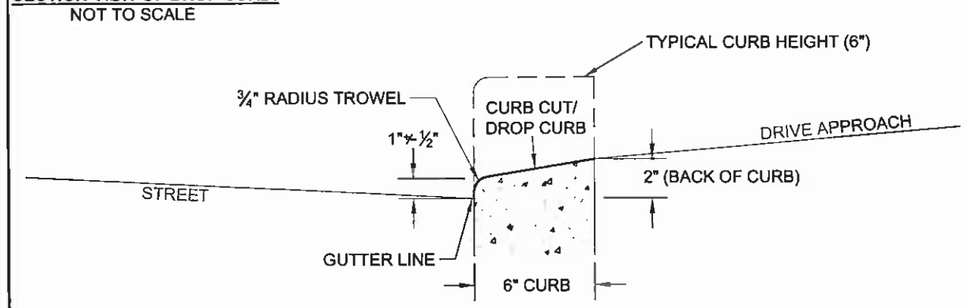

OFFICE OF THE CITY ENGINEER
CANTON, OHIO
DANIEL J. MOEGLIN, P.E., CITY ENGINEER
2436 30th St. NE 44705 330-489-3381 www.cantonohio.gov/engineering

APPROVED DATE: MAR. 2012

APPROVED BY: CDB, RMB, SLH

DRAWING FILE NAME: **ce_28.dwg**

REVISIONS

DESCRIPTION	DATE	BY
NOTE MODIFICATIONS	4/10/12	CDB
MINOR FORMAT EDIT	6/4/12	CDB

STANDARD DRAWING NO. 28

DRIVE APPROACH
WITH SIDEWALK AGAINST CURB

SHEET 1 OF 1

TYPE A
CONCRETE WALK
ADJACENT TO CURB

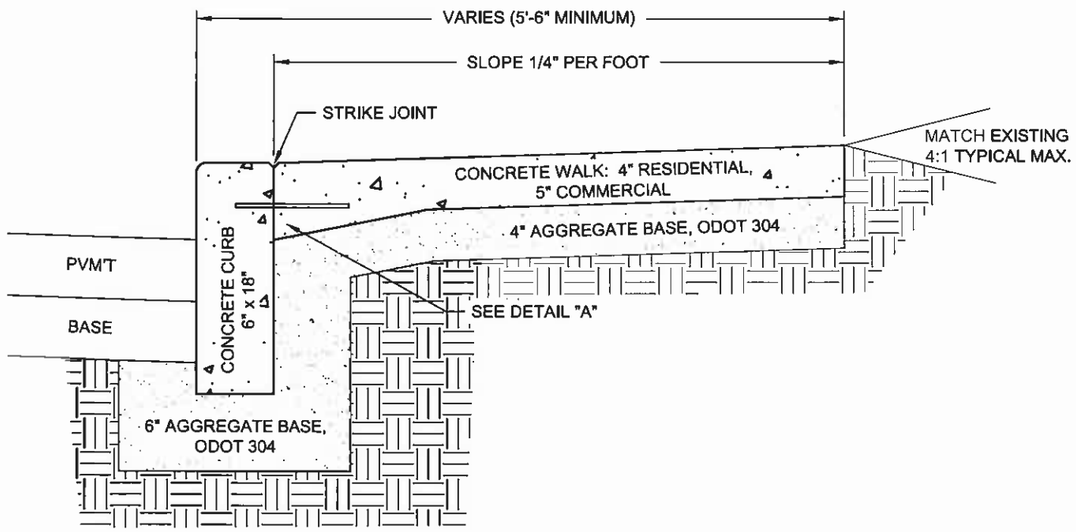

TYPE B
INTEGRAL CONCRETE WALK
AND CURB

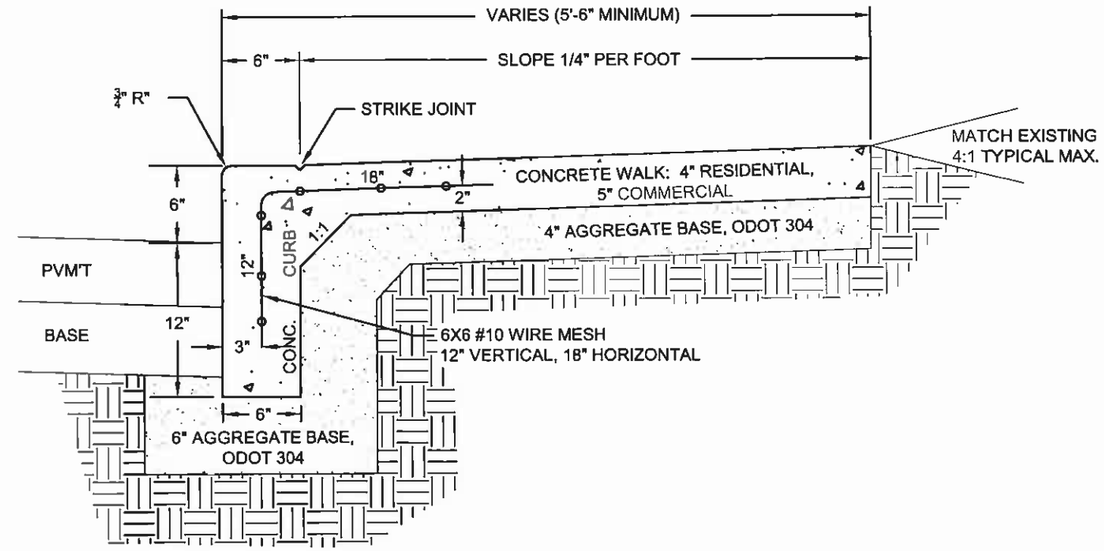

DETAIL "A"

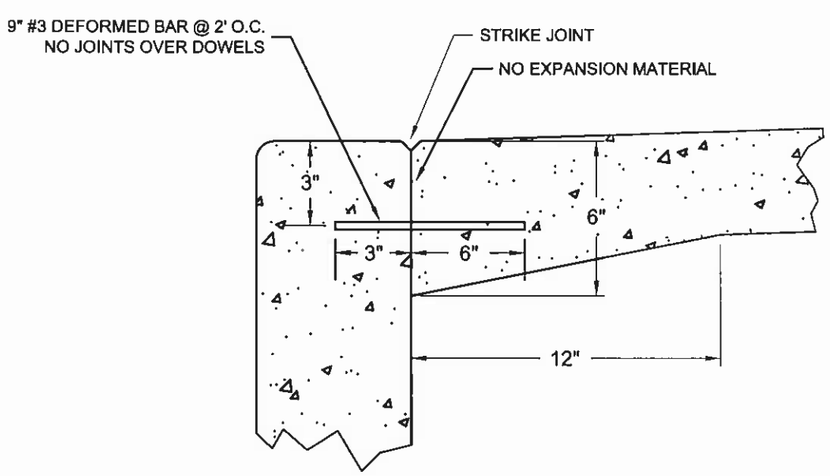

NOTES:

1. CURB CONSTRUCTION MUST TO CONFORM TO ODOT 609 AND THE CURRENT CITY OF CANTON SPECIFICATIONS FOR THE CONSTRUCTION, REPAIR, AND REPLACEMENT OF SIDEWALKS, CURBS, AND DRIVEWAYS.
2. CONCRETE MATERIAL FOR CURB AND WALK MUST BE ODOT 499 CLASS 'C' CONCRETE WITH LIMESTONE AGGREGATE.
3. NO FOUNDRY SAND OR SLAG PERMITTED IN AGGREGATE BASE, ODOT 304.
4. CONCRETE WALK REPLACED OR INSTALLED ADJACENT TO EXISTING CONCRETE CURB MUST BE DOWELED TO THE EXISTING CURB, UNLESS DETERMINED OTHERWISE BY THE CITY ENGINEER.
5. CURB CONTRACTION JOINT MUST BE SPACED 10 FEET TYPICALLY; WALK CONTRACTION JOINTS MUST BE SPACED 5 FEET TYPICALLY, UNLESS OTHERWISE APPROVED BY THE CITY ENGINEER. CURB EXPANSION JOINTS MUST BE INSTALLED AT CURB INLET CATCH BASIN AND AT ANY OTHER RIGID STRUCTURES. CURB EXPANSION AND CONSTRUCTION JOINTS MUST BE DOWLED WITH TWO (2) #5 THRU #8 SMOOTH BARS, 18" LONG, EXTENDING 9" INTO EACH CURB.
6. ODOT REFERENCES ARE FROM THE CURRENT ODOT CONSTRUCTION AND MATERIAL SPECIFICATIONS. ANY DISCREPANCIES SHALL BE SUBJECT TO THE CITY ENGINEER'S DISCRETION.

OFFICE OF THE CITY ENGINEER
CANTON, OHIO
DANIEL J. MOEGLIN, P.E., CITY ENGINEER
2436 30th St. NE 44705 330-489-3381 www.cantonohio.gov/engineering

APPROVED DATE: MARCH 2012

APPROVED BY: CDB, RMB

DRAWING FILE NAME: **ce_29.dwg**

REVISIONS		
DESCRIPTION	DATE	BY

STANDARD DRAWING NO. 29

COMBINED CURB & WALK

SHEET 1 OF 1

CANTON TYPE 1
STANDARD CONCRETE CURB

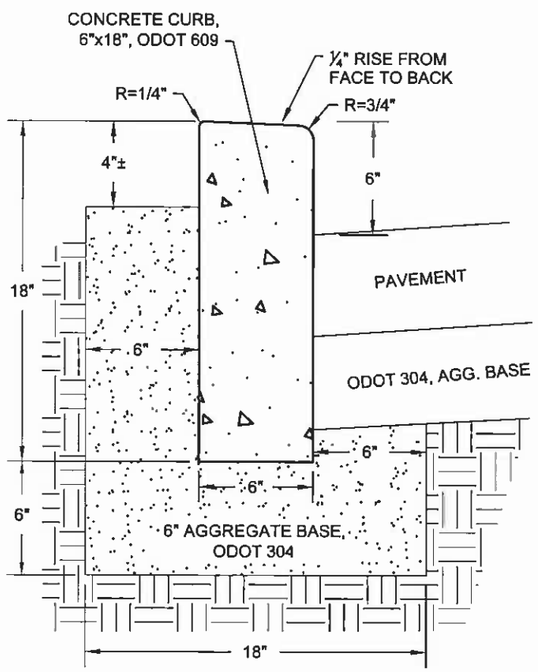

CANTON TYPE 2
STANDARD CONCRETE COMBINED
CONCRETE & GUTTER

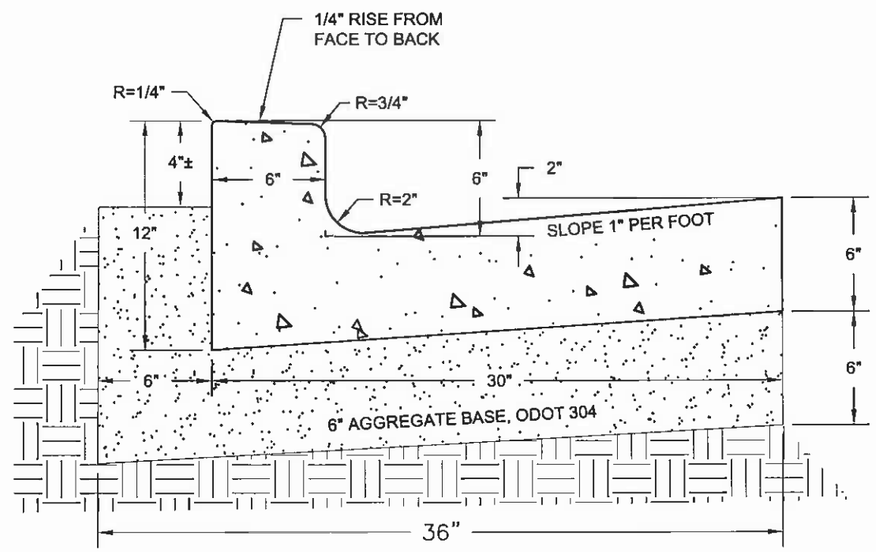

NOTES:

1. CURB CONSTRUCTION MUST TO CONFORM TO ODOT 609 AND THE CURRENT CITY OF CANTON SPECIFICATIONS FOR THE CONSTRUCTION, REPAIR, AND REPLACEMENT OF SIDEWALKS, CURBS, AND DRIVEWAYS.
2. CONCRETE MATERIAL FOR CURB AND WALK MUST BE ODOT 499 CLASS 'C' CONCRETE WITH LIMESTONE AGGREGATE.
3. NO FOUNDRY SAND OR SLAG PERMITTED IN AGGREGATE BASE, ODOT 304.
4. CURB CONTRACTION JOINT MUST BE SPACED 10 FEET TYPICALLY; WALK CONTRACTION JOINTS MUST BE SPACED 5 FEET TYPICALLY, UNLESS OTHERWISE APPROVED BY THE CITY ENGINEER. CURB EXPANSION JOINTS MUST BE INSTALLED AT CURB INLET CATCH BASIN AND AT ANY OTHER RIGID STRUCTURES. CURB EXPANSION AND CONSTRUCTION JOINTS MUST BE DOWLED WITH TWO (2) #5 THRU #8 SMOOTH BARS, 18" LONG, EXTENDING 9" INTO EACH CURB.
5. CONCRETE WALK REPLACED OR INSTALLED ADJACENT TO EXISTING CONCRETE CURB MUST BE DOWELED TO THE EXISTING CURB, UNLESS DETERMINED OTHERWISE BY THE CITY ENGINEER (SEE CITY STD. DWG. 29).
6. ODOT REFERENCES ARE FROM THE CURRENT ODOT CONSTRUCTION AND MATERIAL SPECIFICATIONS. ANY DISCREPANCIES SHALL BE SUBJECT TO THE CITY ENGINEER'S DISCRETION.
7. **ODOT CURB TYPE 6 AND TYPE 2 (ODOT STD CONST. DWG. BP-5.1) ARE ACCEPTABLE OPTIONS RESPECTIVELY TO CITY STANDARD CURB TYPE 1 AND 2 FOR NEW ROADWAY OR CITY PROJECTS, AS APPROVED BY THE CITY ENGINEER. WHEN A CANTON CURB TYPE ABUTS AN ODOT CURB TYPE, THE CONTACTOR MUST TRANSITION THE CURB FACE AND TOP TO MATCH THE EXISTING CURB FACE AND TOP WITHIN A 4' LENGTH, BUT NOT LESS THAN 1' LENGTH.**

OFFICE OF THE CITY ENGINEER
CANTON, OHIO
DANIEL J. MOEGLIN, P.E., CITY ENGINEER
2436 30th St. NE 44705 330-489-3381 www.cantonohio.gov/engineering

APPROVED DATE: MAR 2012

APPROVED BY: RMB

DRAWING FILE NAME: **ce_30.dwg**

REVISIONS		
DESCRIPTION	DATE	BY

STANDARD DRAWING NO. 30

CONCRETE CURB AND COMBINED CURB & GUTTER

SHEET 1 OF 1

NOTE 1: WHEN ASPHALT OVERLAYS BRICK, REPLACE CONCRETE BASE COURSE TO THE TOP OF THE EX. BRICK. FINISH FACE OF CURB TO THE TOP OF BRICK ELEVATION. PLACE EXPANSION JOINT BETWEEN CONC. ROAD BASE AND CURB. CITY REPLACES ASPHALT SURFACE ON PERMITTED PRIVATE PROJECTS ONLY.

NOTE 2: FOR SLIP FORM CONSTRUCTION USING CITY STD. 30 OR ODOT TYPE 6 CURB, USE 9 IN. #3 DOWELS 3 IN INTO CURB AND EXTENDING 6 IN. INTO CONC. WALK, SPACED 2 FT ON CENTER IN LIEU OF MESH. SEE CITY STANDARD DRAWING 29, TYPE A, FOR DETAIL.

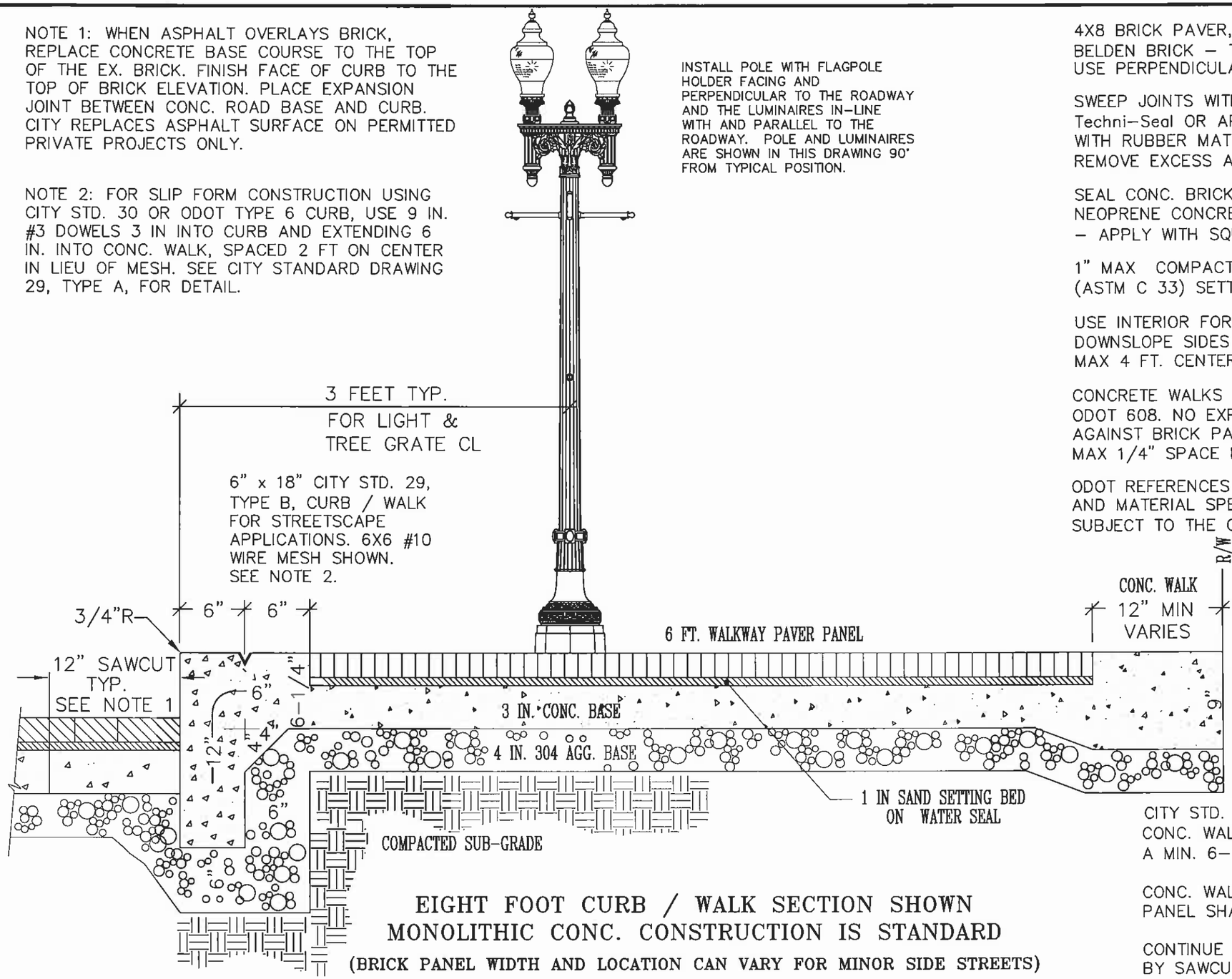

EIGHT FOOT CURB / WALK SECTION SHOWN
MONOLITHIC CONC. CONSTRUCTION IS STANDARD
(BRICK PANEL WIDTH AND LOCATION CAN VARY FOR MINOR SIDE STREETS)

4X8 BRICK PAVER, 2 1/4" THICK – PAWNEE PAVER BY BELDEN BRICK – TERRA COTTA RANGE EXCLUDED. USE PERPENDICULAR HERRINGBONE PATTERN.

SWEEP JOINTS WITH DRY MIXTURE OF POLYMERIC SAND Techni-Seal OR APPROVED EQUAL. USE PLATE TAMPER WITH RUBBER MAT OR OTHER PROTECTION FOR BRICK. REMOVE EXCESS AND MOISTEN TO SET JOINT SEALANT SAND.

SEAL CONC. BRICK BASE TO 1" UP SIDES USING NON FIBROUS NEOPRENE CONCRETE SEALANT (BASEMENT SEALER) – APPLY WITH SQUEEGEE – SEAL ALL JOINTS AND CRACKS.–

1" MAX COMPACTED CONCRETE SAND ODOT 703.02 (ASTM C 33) SETTING BED ON NEOPRENE SEALANT.

USE INTERIOR FORMING PINS FOR WEEP HOLES ON DOWNSLOPE SIDES AND INTERIOR CORNERS. MAX 4 FT. CENTERS. – COVER W/ FILTER FABRIC.

CONCRETE WALKS AND PAVER BASE IS TO BE CLASS "C" ODOT 608. NO EXPANSION JOINTS ARE TO BE PLACED AGAINST BRICK PAVER SECTIONS. MAX 1/4" SPACE BETWEEN BRICK AND CONCRETE.

ODOT REFERENCES ARE FROM THE CURRENT ODOT CONSTRUCTION AND MATERIAL SPECIFICATIONS. ANY DISCREPANCIES SHALL BE SUBJECT TO THE CITY ENGINEER'S DISCRETION.

EXPANSION JOINTS IN WALKS AND AGAINST ALL BUILDINGS USE 1/2" CLOSED CELL SEALTIGHT CERAMAR FOAM OR EQUAL, 1/2" PEEL STRIP PRE CUT

EXPANSION JOINT AT 60' MAX. O.C. USE POLYURETHANE ELASTOMERIC SEALANT TREMCO THC 900 / 901 OR EQUAL

CITY STD. CONC. WALK (COMMERCIAL) IS 5 IN. THICK. CONC. WALK WITHIN 6 IN. OF BRICK PANEL SHALL BE A MIN. 6-1/4" THICK.

CONC. WALK WITHIN 12 IN. OF R/W AND NEXT TO BRICK PANEL SHALL BE A MIN. 9 IN. THICK.

CONTINUE TRANSVERSE WALK CONTROL JOINTS BY SAWCUTTING ACROSS BRICK CONC. BASE.

OFFICE OF THE CITY ENGINEER
CANTON, OHIO
DANIEL J. MOEGLIN, P.E., CITY ENGINEER
2436 30th St. NE 44705 330-489-3381 www.cantonohio.gov/engineering

APPROVED DATE: FEB. 2012

APPROVED BY: JTD

DRAWING FILE NAME: ce_40-47_STREETSCAPE.dwg

REVISIONS		
DESCRIPTION	DATE	BY

STANDARD DRAWING NO. 40

TYPICAL STREETSCAPE CORRIDOR

SHEET 1 OF 1

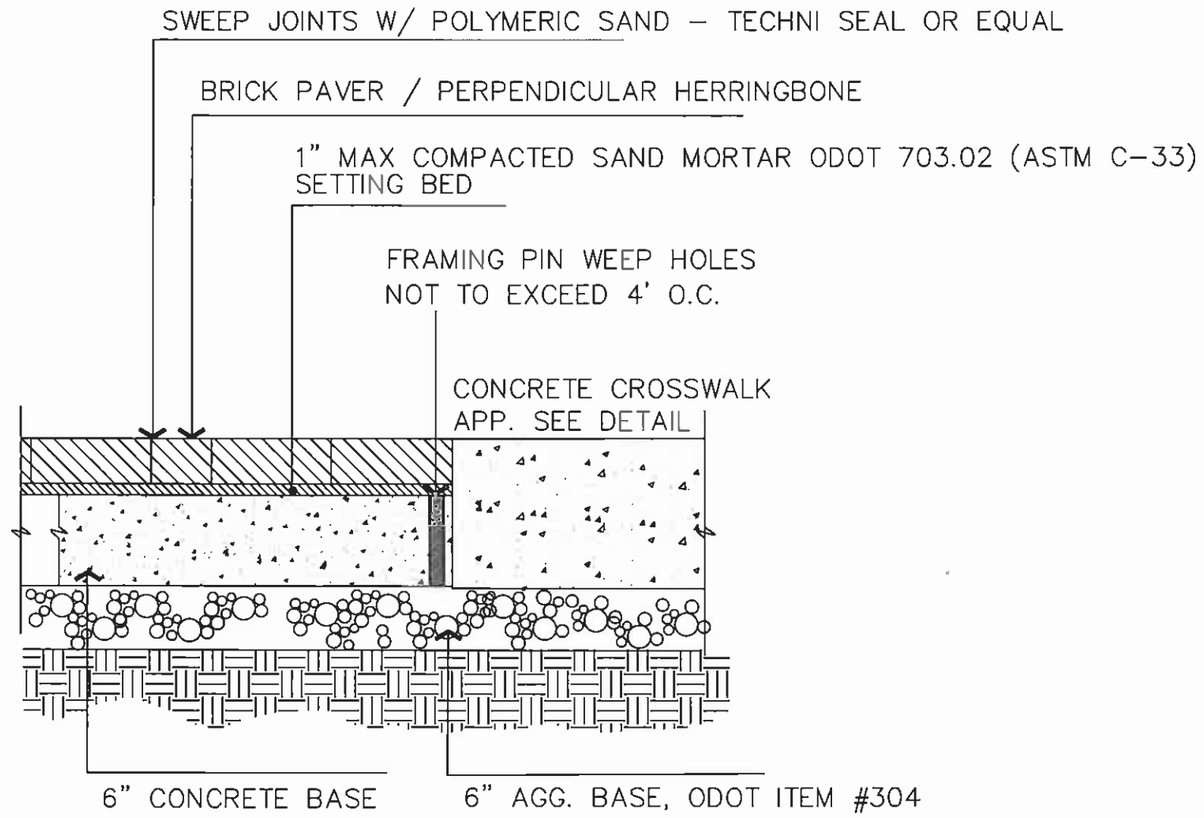

NOTE: NO FOUNDRY SAND OR SLAG IS PERMITTED IN AGGREGATE BASE (304).

CROSSWALK DETAIL

4X8 BRICK PAVER, 2 3/4" THICK – ROADWAY PAVER BY BELDEN BRICK – ASTM C1272 TRAFFIC TYPE F APPL. PX WEATHER SX – 10,000 PSI – COLOR JUMBO REGIMENTAL

BRICK ALTERNATE – WHITACRE GREER 4 X 8–1/2 X 3–1/2 WEATHER CLASS SX, TRAFFIC F, APPLICATION PX – COLOR 33 DARK ANTIQUE – 10,000 PSI ASTM C1272
BRICK TO HAVE BEVELED EDGE AND LUGS.

USE PERPENDICULAR HERRINGBONE PATTERN IN INTERSECTION.

SWEEP JOINTS WITH DRY MIXTURE OF POLYMERIC SAND Techni–Seal OR APPROVED EQUAL. USE PLATE TAMPER WITH RUBBER MAT OR OTHER PROTECTION FOR BRICK. REMOVE EXCESS AND MOISTEN TO SET JOINT SEALANT SAND.

1" MAX COMPACTED CONCRETE SAND ODOT 703.02 (ASTM C 33) SETTING BED W/ MORTAR.

USE INTERIOR FORMING PINS FOR WEEP HOLES ON DOWNSLOPE SIDES AND INTERIOR CORNERS.
MAX 4 FT. CENTERS. – COVER W/ FILTER FABRIC.

CONCRETE CROSSWALK AND PAVER BASE IS TO BE CLASS "C" ODOT 499.03 – HIGH EARLY. NO EXPANSION JOINTS ARE TO BE PLACED AGAINST BRICK PAVER SECTIONS.

MAX 1/4" SPACE BETWEEN BRICK AND CONCRETE.
PROVIDE 1/4" RADIUS ON ALL SLAB EDGES.

ODOT REFERENCES ARE FROM THE CURRENT ODOT CONSTRUCTION AND MATERIAL SPECIFICATIONS. ANY DISCREPANCIES SHALL BE SUBJECT TO THE CITY ENGINEER'S DISCRETION.

ALL CONCRETE CONSTRUCTION TO CONFORM TO CURRENT CITY OF CANTON SPECIFICATIONS FOR CONSTRUCTION, REPAIR AND REPLACEMENT OF SIDEWALKS, CURBS AND DRIVEWAYS.

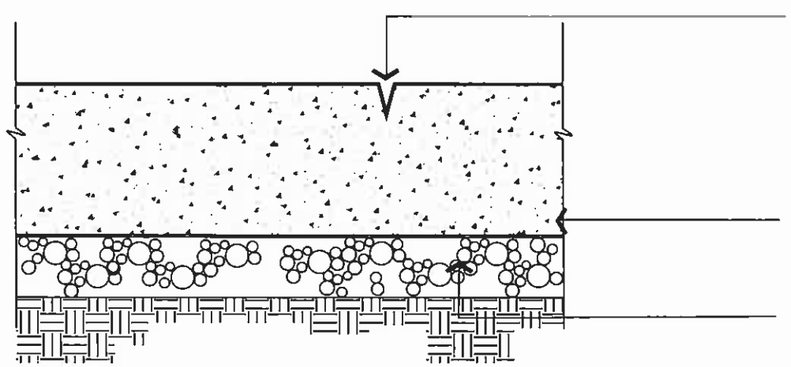

OFFICE OF THE CITY ENGINEER
CANTON, OHIO
DANIEL J. MOEGLIN, P.E., CITY ENGINEER
2436 30th St. NE 44705 330-489-3381 www.cantonohio.gov/engineering

APPROVED DATE: FEB. 2012

APPROVED BY: JTD

DRAWING FILE NAME:
ce_40-47_STREETSCAPE.dwg

REVISIONS		
DESCRIPTION	DATE	BY

STANDARD DRAWING NO. 41
ROADWAY BRICK & CROSSWALK PAVEMENT DETAILS
SHEET 1 OF 1

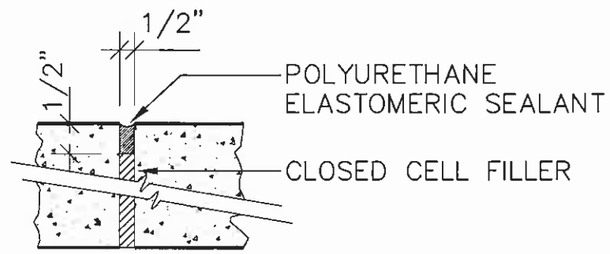

EXPANSION JOINT DETAIL

NOT TO SCALE

NOTES:

- EXPANSION JOINTS TO BE 60' MAX. O.C. CONTROL JOINTS TO BE @ 4' O.C. OR AS SHOWN ON PLAN OR DIRECTED BY ENGINEER.
- PROVIDE LIGHT BROOM FINISH ON ALL CONCRETE SURFACES AFTER JOINT & EDGE TOOLING. PROVIDE 1/4" RADIUS ON ALL SLAB EDGES.

SAWCUT CONTROL JOINTS MAY BE PERMITTED IN STREETSCAPE AREAS IF APPROVED BY THE PROJECT ARCHITECT/ENGINEER AND THE CITY ENGINEER PRIOR TO BID AND CONSTRUCTION.

CONCRETE WALK TO BE CLASS "C" ODOT 499 NO. 57 OR 67 LIMESTONE (SEE BELOW)
NO EXPANSION JOINTS ARE TO BE PLACED AGAINST BRICK PAVER SECTIONS

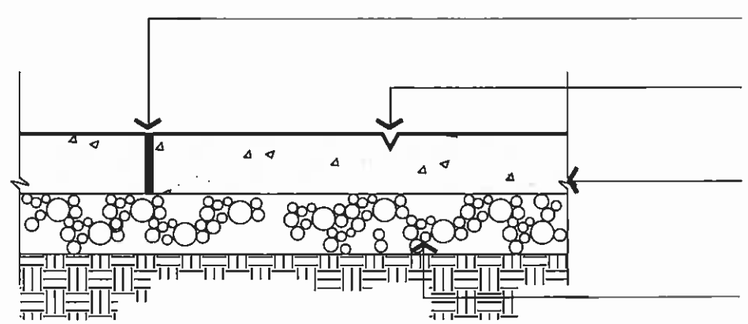

1/2" CLOSED CELL EXPANSION JOINT FILLER IN WALK AND AGAINST BUILDINGS TO BE SEALTIGHT CERAMAR FOAM OR EQUAL, 1/2" PEEL STRIP CUT EXPANSION JOINT AT 60' MAX. O.C.

TYPICAL TOOLED AND CUT CONTROL JOINT, 1/5 DEPTH OF SLAB W/POLYURETHANE ELASTOMERIC SEALANT
– TREMCO THC 900 / 901 OR EQUAL

5" PLAIN PORTLAND CEMENT CONCRETE PAVEMENT, ODOT ITEM 608 AND 499, AS PER PLAN.

4" COMPACTED THICKNESS AGGREGATE BASE COURSE, ODOT ITEM #304.

NOTE: NO FOUNDRY SAND OR SLAG IS PERMITTED IN AGGREGATE BASE (304).
AGGREGATE IN SURFACE CONCRETE SHALL BE AASHTO M NO. 57 OR 67 LIMESTONE ONLY.
ALL CONCRETE FOR CURB AND WALKS SHALL BE ODOT 499, CLASS C.
CLASS C OPTION 1 MAY BE USED BETWEEN MAY 1 AND OCTOBER 15.
AGGREGATE IN SURFACE CONCRETE SHALL BE NO. 57 OR 67 LIMESTONE ONLY.

ODOT REFERENCES ARE FROM THE CURRENT ODOT CONSTRUCTION AND MATERIAL SPECIFICATIONS. ANY DISCREPANCIES SHALL BE SUBJECT TO THE CITY ENGINEER'S DISCRETION.

ALL CONCRETE CONSTRUCTION TO CONFORM TO CURRENT CITY OF CANTON SPECIFICATIONS FOR CONSTRUCTION, REPAIR AND REPLACEMENT OF SIDEWALKS, CURBS AND DRIVEWAYS.

OFFICE OF THE CITY ENGINEER
CANTON, OHIO
DANIEL J. MOEGLIN, P.E., CITY ENGINEER
2436 30th St. NE 44705 330-489-3381 www.cantonohio.gov/engineering

APPROVED DATE: FEB. 2012

APPROVED BY: JTD

DRAWING FILE NAME:
ce_40-47_STREETSCAPE.dwg

REVISIONS		
DESCRIPTION	DATE	BY

STANDARD DRAWING NO. 42

STREETSCAPE CONCRETE WALK PAVEMENT DETAILS

SHEET 1 OF 1

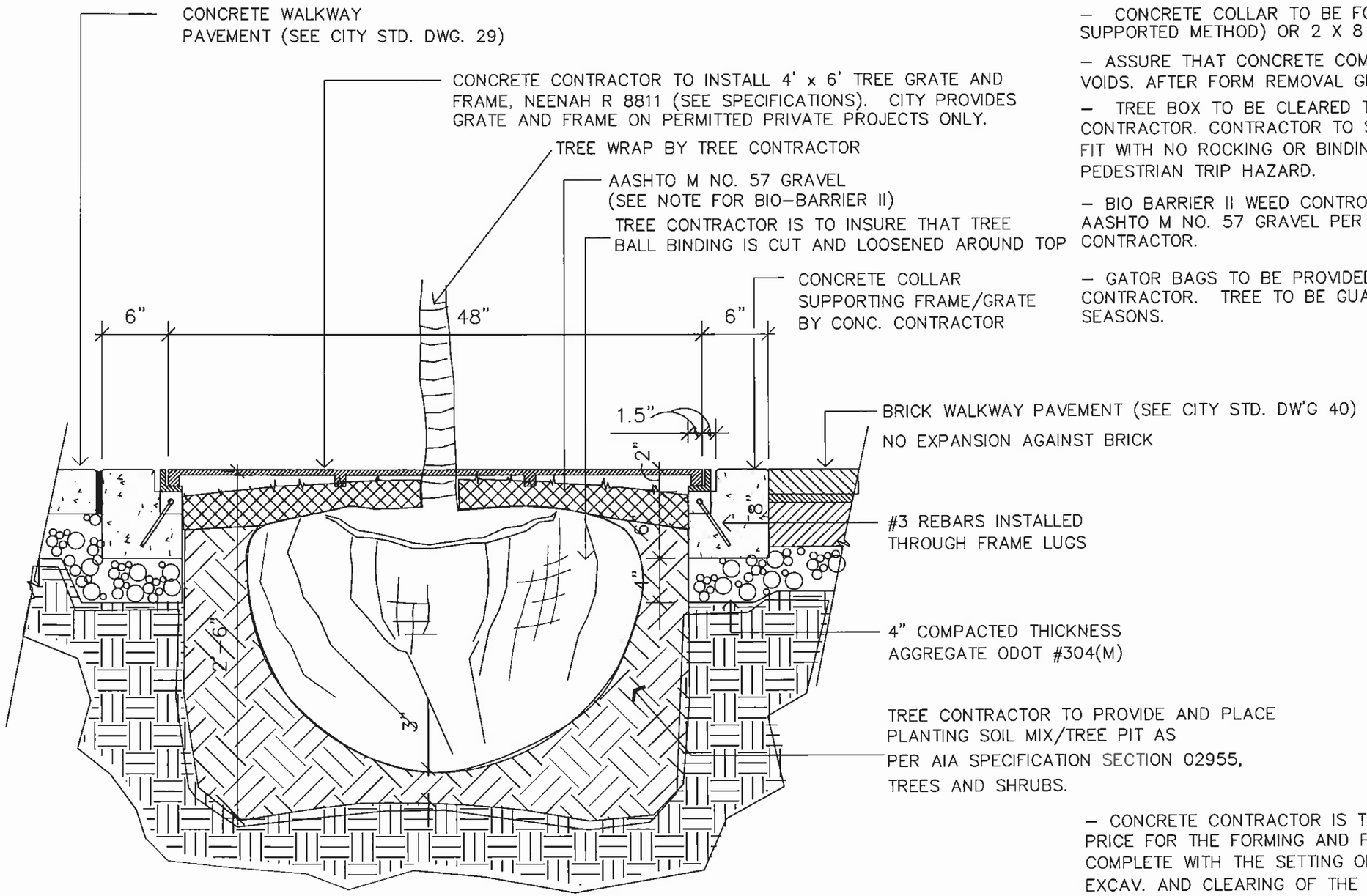

NOTES:

- CONCRETE COLLAR TO BE FORMED USING 2 X 6 (FRAME SUPPORTED METHOD) OR 2 X 8 (INSIDE FORM METHOD)
- ASSURE THAT CONCRETE COMPLETELY FILLS FORMS W/ NO VOIDS. AFTER FORM REMOVAL GROUT ALL HONEYCOMB VOIDS.
- TREE BOX TO BE CLEARED TO LIMIT SHOWN BY CONCRETE CONTRACTOR. CONTRACTOR TO SET GRATE AND INSURE PROPER FIT WITH NO ROCKING OR BINDING. COVER OPENING TO PREVENT PEDESTRIAN TRIP HAZARD.
- BIO BARRIER II WEED CONTROL IS TO BE PLACED UNDER AASHTO M NO. 57 GRAVEL PER MFR. SPECS. BY TREE CONTRACTOR.
- GATOR BAGS TO BE PROVIDED AND FILLED BY TREE CONTRACTOR. TREE TO BE GUARANTEED FOR TWO GROWING SEASONS.

304 (M) – NO FOUNDRY SAND, ACBFS, GS OR OTHER SLAG PERMITTED

- CONCRETE CONTRACTOR IS TO PROVIDE A UNIT LUMP SUM PRICE FOR THE FORMING AND PLACING OF THE CONCRETE COLLAR COMPLETE WITH THE SETTING OF THE FRAME AND GRATE AND EXCAV. AND CLEARING OF THE TREE PIT.
- TREE CONTRACTOR TO PROVIDE AND PLANT TREES INCLUDING ALL MATERIALS SPECIFIED IN PROPOSAL.

OFFICE OF THE CITY ENGINEER
CANTON, OHIO
DANIEL J. MOEGLIN, P.E., CITY ENGINEER
2436 30th St. NE 44705 330-489-3381 www.cantonohio.gov/engineering

APPROVED DATE: FEB. 2012

APPROVED BY: JTD

DRAWING FILE NAME: ce_40-47_STREETSCAPE.dwg

REVISIONS		
DESCRIPTION	DATE	BY

STANDARD DRAWING NO. 43

TREE FRAME & GRATE
CONSTRUCTION DETAILS

SHEET 1 OF 1

THE GENERAL OR CONCRETE CONTRACTOR SHALL VERIFY THROUGH THE OWNER THE EXISTANCE OF UNDERGROUND VAULTS, BASEMENTS OR OTHER OPENINGS UNDER THE PROPOSED WALK REPLACEMENT AREA AND IF THE UNDERGROUND AREA IS TO REMAIN.

FOR PERMITTED PRIVATE PROJECTS: IF THE UNDERGROUND BASEMENTS, VAULTS OR OPENINGS ARE DISCOVERED DURING THE DEMOLITION PROCESS, ALL WORK IS TO BE SUSPENDED UNTIL THE OWNER PROVIDES FOR CORRECTIVE ACTIONS. THE CITY IS NOT RESPONSIBLE FOR ANY COSTS INCURRED FOR REMEDIAL ACTIONS FOR PRIVATE PROJECTS.

THE CITY DEEMS SUCH OPENINGS TO BE AN ENCROACHMENT AND AS SUCH REQUIRES THE OWNER TO ENTER INTO A LICENSE OR AGREEMENT FOR ITS CONTINUED USE.

NO WALK IS TO BE CONSTRUCTED UNTIL THE CITY ENGINEER IS NOTIFIED OF THE ENCROACHMENT AND REMEDIAL ACTIONS ARE APPROVED CONFORMING TO THESE STANDARDS.

ODOT REFERENCES ARE FROM THE CURRENT ODOT CONSTRUCTION AND MATERIAL SPECIFICATIONS. ANY DISCREPANCIES SHALL BE SUBJECT TO THE CITY ENGINEER'S DISCRETION.

ALL CONCRETE CONSTRUCTION TO CONFORM TO CURRENT CITY OF CANTON SPECIFICATIONS FOR CONSTRUCTION, REPAIR AND REPLACEMENT OF SIDEWALKS, CURBS AND DRIVEWAYS.

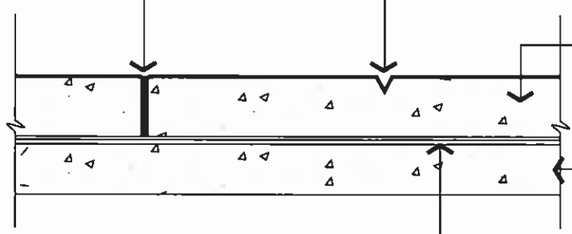

EXPANSION JOINT AT 60 FT. MAX O.C.
1/2" CLOSED CELL EXPANSION JOINT IN WALK AND AGAINST BLD'G, SEALTIGHT CERAMAR FOAM W/ 1/2" PEEL STRIP CUT OR EQUAL. POLYEURETHANE ELASTOMERIC SEALANT TO BE TREMCO THC 900/901

TYP. CONTROL JOINT 4 FT. O.C. OR AS DIRECTED, 1/5 DEPTH OF SLAB W/ POLYURETHANE ELASTOMERIC SEALANT, TYP.

VARIABLE DEPTH PORTLAND CEMENT CONCRETE ODOT 499, CLASS C, SIDEWALK, ODOT 608 – AGGREGATE TO BE # 57, 67 LIMESTONE AGGREGATE AND AS RE–INFORCED IN SPECIFICATIONS PROVIDED BY OWNER'S ENGINEER LIGHT BROOM FINISH ON SURFACE. PROVIDE 1/4" RADIUS ON SLAB EDGES.

ROOF OF VAULT / BASEMENT CONCRETE SLAB.
IT IS THE OWNER'S ARCHITECT / ENGINEER'S RESPONSIBILITY TO INDICATE ON THE SURFACE THE EXTENT OF THE VAULT / BASEMENT ROOF STRUCTURE AND DEPTH. THE OWNER'S ARCHITECT / ENGINEER WILL INSPECT THE ROOF AND STRUCTURE FOR STABILITY AND MAKE ALL NECESSARY REPAIRS PRIOR TO WALK CONSTRUCTION OR REPLACEMENT.

WATERPROOF MEMBRANE AND PROTECTION BOARD.

SEALTIGHT MEL–ROL SELF ADHERING WATERPROOFING MEMBRANE AND PROTECTION BOARD FROM W.R. MEADOWS, INC. IS ACCEPTABLE

FOR PERMITTED PRIVATE PROJECTS THE OWNER MAY PROVIDE SPECIFACATIONS FOR MEMBRANE AND BOARD PRIOR TO WALK REPLACEMENT.

FOR PRIVATE PROJECTS, THE CITY IS NOT RESPONSIBILE FOR ANY DAMAGE TO THE STRUCTURE OR CONSTRUCTION / RE–CONSTRUCTION COSTS. THE CITY WILL NOT REMOVE CONCRETE OVER VAULT / BASEMENT STRUCTURES.

FOR PRIVATE PROJECTS, IT IS THE OWNER'S RESPONSIBILITY TO PROTECT THE VAULT / BASEMENT STRUCTURE FROM DUST / DIRT OR RAINWATER DURING CONSTRUCTION.

CONCRETE WALK PAVEMENT OVER VAULT / BASEMENT TO REMAIN

FOR VAULT / BASEMENT TO BE ABANDONED SEE CITY STANDARD DRAWING 46

OFFICE OF THE CITY ENGINEER
CANTON, OHIO
DANIEL J. MOEGLIN, P.E., CITY ENGINEER
2436 30th St. NE 44705 330-489-3381 www.cantonohio.gov/engineering

APPROVED DATE: FEB. 2012

APPROVED BY: JTD

DRAWING FILE NAME: **ce_40-47_STREETSCAPE.dwg**

REVISIONS		
DESCRIPTION	DATE	BY

STANDARD DRAWING NO. 44
CONCRETE WALK OVER VAULT
CONSTRUCTION DETAILS
SHEET 1 OF 1

THE GENERAL OR CONCRETE CONTRACTOR SHALL VERIFY THROUGH THE OWNER THE EXISTANCE OF UNDERGROUND VAULTS, BASEMENTS OR OTHER OPENINGS UNDER THE PROPOSED WALK REPLACEMENT AREA AND IF THE UNDERGROUND AREA IS TO REMAIN.

FOR PERMITTED PRIVATE PROJECTS: IF THE UNDERGROUND BASEMENTS, VAULTS OR OPENINGS ARE DISCOVERED DURING THE DEMOLITION PROCESS, ALL WORK IS TO BE SUSPENDED UNTIL THE OWNER PROVIDES FOR CORRECTIVE ACTIONS. THE CITY IS NOT RESPONSIBLE FOR ANY COSTS INCURRED FOR REMEDIAL ACTIONS FOR PRIVATE PROJECTS.

THE CITY DEEMS SUCH OPENINGS TO BE AN ENCROACHMENT AND AS SUCH REQUIRES THE OWNER TO ENTER INTO A LICENSE OR AGREEMENT FOR ITS CONTINUED USE.

NO WALK IS TO BE CONSTRUCTED UNTIL THE CITY ENGINEER IS NOTIFIED OF THE ENCROACHMENT AND REMEDIAL ACTIONS ARE APPROVED CONFORMING TO THESE STANDARDS.

4X8 BRICK PAVER, 2 1/4" THICK – PAWNEE PAVER BY BELDEN BRICK – TERRA COTTA RANGE EXCLUDED. USE PERPENDICULAR HERRINGBONE PATTERN.

SWEEP JOINTS WITH DRY MIXTURE OF POLYMERIC SAND Techni–Seal OR APPROVED EQUAL. USE PLATE TAMPER WITH RUBBER MAT OR OTHER PROTECTION FOR BRICK. REMOVE EXCESS AND MOISTEN TO SET JOINT SEALANT SAND.

SEAL CONC. BRICK BASE TO 1" UP SIDES USING NON FIBROUS NEOPRENE CONCRETE SEALANT (BASEMENT SEALER) – APPLY WITH SQUEEGEE – SEAL ALL JOINTS AND CRACKS.–

NO EXPANSION JOINT IS TO BE USED BETWEEN BRICK AND ADJOINING WALK.

IF 4" MIN DEPTH OF BRICK BOX CANNOT BE MET – USE STD. DRAWING 44 CONCRETE WALK OVER VAULT DETAILS.

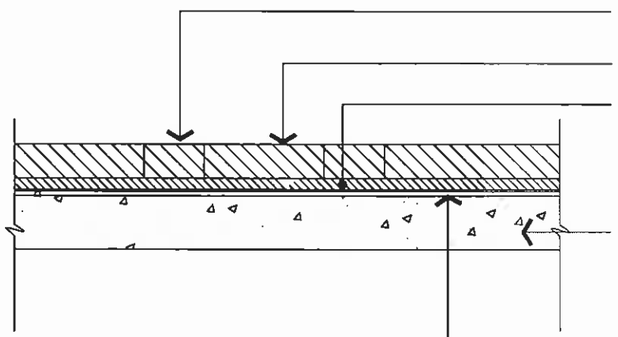

BRICK BOX WITH 4X8 BRICK PAVERS, 2 1/4" THICK

SWEEP JOINTS WITH POLYMERIC SAND MIXTURE – SEE NOTE

MIN. 1" PLAIN PORTLAND CEMENT CONCRETE PAVEMENT ITEM 608 AND ODOT 499 CLASS "C" – AGGREGATE TBD
MIN. DEPTH NEEDED FROM F/G TO TOP OF VAULT IS 4".
USE CONCRETE SAND (ASTM C–33) AS NEEDED FOR LEVELING UP TO 1/2"

ROOF OF VAULT / BASEMENT CONCRETE SLAB.
IT IS THE OWNER'S ARCHITECT / ENGINEER'S RESPONSIBILITY TO INDICATE ON THE SURFACE THE EXTENT OF THE VAULT / BASEMENT ROOF STRUCTURE AND DEPTH. THE OWNER'S ARCHITECT / ENGINEER WILL INSPECT THE ROOF AND STRUCTURE FOR STABILITY AND MAKE ALL NECESSARY REPAIRS PRIOR TO WALK CONSTRUCTION OR REPLACEMENT.

FOR PRIVATE PROJECTS, THE CITY IS NOT RESPONSIBILE FOR ANY DAMAGE TO THE STRUCTURE OR CONSTRUCTION / RE–CONSTRUCTION COSTS. THE CITY WILL NOT REMOVE CONCRETE OVER VAULT / BASEMENT STRUCTURES.

FOR PRIVATE PROJECTS, IT IS THE OWNER'S RESPONSIBILITY TO PROTECT THE VAULT / BASEMENT STRUCTURE FROM DUST / DIRT OR RAINWATER DURING CONSTRUCTION.

WATERPROOF MEMBRANE AND PROTECTION BOARD.

SEALTIGHT MEL–ROL SELF ADHERING WATERPROOFING MEMBRANE AND PROTECTION BOARD FROM W.R. MEADOWS, INC. IS ACCEPTABLE

FOR PERMITTED PRIVATE PROJECTS THE OWNER MAY PROVIDE SPECIFACATIONS FOR MEMBRANE AND BOARD PRIOR TO WALK REPLACEMENT.

ODOT REFERENCES ARE FROM THE CURRENT ODOT CONSTRUCTION AND MATERIAL SPECIFICATIONS. ANY DISCREPANCIES SHALL BE SUBJECT TO THE CITY ENGINEER'S DISCRETION.

ALL CONCRETE CONSTRUCTION TO CONFORM TO CURRENT CITY OF CANTON SPECIFICATIONS FOR CONSTRUCTION, REPAIR AND REPLACEMENT OF SIDEWALKS, CURBS AND DRIVEWAYS.

BRICK WALKWAY PAVERS OVER VAULT TO REMAIN

FOR VAULT / BASEMENT TO BE ABANDONED SEE CITY STANDARD DRAWING 46

OFFICE OF THE CITY ENGINEER
CANTON, OHIO
DANIEL J. MOEGLIN, P.E., CITY ENGINEER
2436 30th St. NE 44705 330-489-3381 www.cantonohio.gov/engineering

APPROVED DATE: FEB. 2012

APPROVED BY: JTD

DRAWING FILE NAME: ce_40-47_STREETSCAPE.dwg

REVISIONS		
DESCRIPTION	DATE	BY

STANDARD DRAWING NO. 45

BRICK WALK OVER VAULT
CONSTRUCTION DETAILS

SHEET 1 OF 1

ODOT REFERENCES ARE FROM THE CURRENT ODOT CONSTRUCTION AND MATERIAL SPECIFICATIONS. ANY DISCREPANCIES SHALL BE SUBJECT TO THE CITY ENGINEER'S DISCRETION.

ALL CONCRETE CONSTRUCTION TO CONFORM TO CURRENT CITY OF CANTON SPECIFICATIONS FOR CONSTRUCTION, REPAIR AND REPLACEMENT OF SIDEWALKS, CURBS AND DRIVEWAYS.

THE GENERAL OR CONCRETE CONTRACTOR SHALL VERIFY THROUGH THE OWNER THE EXISTANCE OF UNDERGROUND VAULTS, BASEMENTS OR OTHER OPENINGS UNDER THE PROPOSED WALK REPLACEMENT AREA AND IF THE UNDERGROUND AREA IS TO REMAIN.

FOR PERMITTED PRIVATE PROJECTS: IF THE UNDERGROUND BASEMENTS, VAULTS OR OPENINGS ARE DISCOVERED DURING THE DEMOLITION PROCESS, ALL WORK IS TO BE SUSPENDED UNTIL THE OWNER PROVIDES FOR CORRECTIVE ACTIONS. THE CITY IS NOT RESPONSIBLE FOR ANY COSTS INCURRED FOR REMEDIAL ACTIONS FOR PRIVATE PROJECTS.

THE CITY DEEMS SUCH OPENINGS TO BE AN ENCROACHMENT AND AS SUCH REQUIRES THE OWNER TO ENTER INTO A LICENSE OR AGREEMENT FOR ITS CONTINUED USE.

NO WALK IS TO BE CONSTRUCTED UNTIL THE CITY ENGINEER IS NOTIFIED OF THE ENCROACHMENT AND REMEDIAL ACTIONS ARE APPROVED CONFORMING TO THESE STANDARDS.

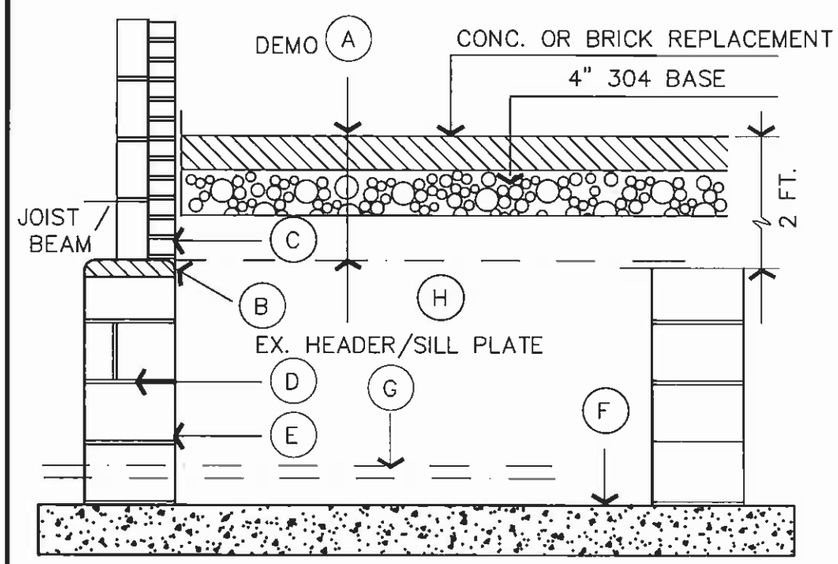

UPON DISCOVERY OF BASEMENTS, VAULTS, PARTIALLY ABANDONED STRUCTURES OR OTHER VOIDS, THE GENERAL OR CONTRACTOR SHALL VERIFY THROUGH THE OWNER, IF UTILITY SERVICES ENTER THE BUILDING IN THE VICINITY AND VISUALLY INSPECT THE ADJOINING WALL TO SEE IF PREVIOUS ABANDONEMENT WORK HAD BEEN PERFORMED (SUCH AS WINDOW WELL CLOSURE, STAIRWELL OR ELEVATOR SHAFT CLOSURE). IF THE WALL IS SECURE, PROCEED WITH ABANDONEMENT UNDER CMS ODOT 202 [202.02 & 202.06]. MODIFICATIONS TO ODOT 202 ARE AS FOLLOWS:

THE CONTRACTOR SHALL PROBE VOIDS OR PARTIALLY ABANDONED STRUCTURES TO DETERMINE THEIR EXTENTS AND IF UNSUITABLE MATERIAL UNDERLIES THE SURFACE. REMOVE ALL UNSUITABLE MATERIAL AS DIRECTED BY THE ENGINEER. FILL VOIDS WITH ODOT 703.11 TYPE I OR III STRUCTURAL BACKFILL. NO FOUNDRY SAND OR SLAG PERMITTED. COMPACT IN 8" LIFTS BY MECHANICAL MEANS. BUCKET COMPACTION MUST BE SUPPLEMENTED W/ VIBRATION OR OTHER TAMPING EQUIPMENT AS DIRECTED.

(A) DEMOLITION – REMOVE CONCRETE WALK, VAULT/BASEMENT ROOF, SUPPORT BEAMS AND REINFORCING TO FACE OF BUILDING. FROM BASEMENT/VAULT REMOVE ALL WOOD, ABANDONED ELECTRICAL CONDUIT AND FIXTURES, ABANDONED UTILITY LINES AND DEMOLITION DEBRIS LARGER THAN 8". DEMO SIDE WALLS TO A LEVEL 2 FEET BELOW FINISH GRADE. RUBBILIZED CONC. MAY BE USED FOR FILL IN BOTTOM 1/4 OF VOID. PROTECT ALL UTILITY LINES AND MAINS THAT ARE TO REMAIN IN SERVICE.

(B) INSPECT EXISTING OPENING HEADER AND / OR SILL PLATE FOR SUFFICIENCY. REPAIR/REINFORCE OR REPLACE AS NECESSARY TO SUPPORT THE STRUCTURE ABOVE.

(C) THE CONTRACTOR SHALL FILL WITH MASONRY AND/OR GROUT ALL ANULAR SPACES AND OPENINGS BETWEEN THE HEADER/SILL PLATE AND BASEMENT CEILING TO PREVENT SOIL AND CONCRETE MIGRATION.

(D) FILL OPENING WITH 8" OR 12" CMU (VERIFY WALL THICKNESS) W/TRUSS TYPE HORIZONTAL REINFORCING 16" OR 24" O.C. VERTICALLY. GROUT WALL SOLID. CONNECT WALL TO FLOOR W/ 2 VERTICAL – 22" # 5 BAR AT 16" O.C. GROUT SOLID. BOLSTER WIDE WIDTH OPENINGS AS NEEDED FOR LATERAL SUPPORT.

(E) FILL ALL CRACKS OR OPENINGS WITH MASONRY AND/OR SOLID GROUT WITH PARTICULAR ATTENTION TO OPENINGS AROUND SERVICE CONDUITS. WATERPROOF ENTIRE WALL AREA WITH NEOPRENE BITUMINOUS BASEMENT WATERSEALING OR EQUAL. DOUBLE WATERPROOF BASE OF WALL UP 36" AND ON FLOOR OUT 12".

(F) PLUG ALL FLOOR DRAINS AND RUBBILIZE AND/OR PERFORATE FLOOR FOR DRAINAGE AS DIRECTED.

(G) PRIOR TO COVERING WITH BACKFILL, SUPPORT ALL UTILITY MAINS AND SERVICE CONDUITS. ENCASE SERVICE MAINS AND CONDUITS WITH #57 OR 67 CRUSHED STONE, 1 FOOT UNDER AND OVER..

(H) BACKFILL BASEMENT/VAULT AREA WITH STRUCTURAL BACKFILL, ODOT 703.11, TYPE 1 OR 3, IN LAYERS NOT TO EXCEED 8" LOOSE DEPTH AND COMPACTED BY APPROVED MECHANICAL MEANS. BUCKET COMPACTION MUST BE SUPPLEMENTED BY VIBRATION OR TAMPING EQUIPMENT AS DIRECTED. NO FOUNDARY SAND OR SLAG BACKFILL IS PERMITTED. RPCC IS PERMITTED IF SOURCE AND GRADATION DOCUMENTATION IS PROVIDED FROM A SOURCE AS APPROVED BY THE ENGINEER. IN LIEU OF GRANULAR BACKFILL, LOW STRENGTH MORTAR BACKFILL, ODOT 613, (A.K.A. CONTROL DENSITY FILL) MAY BE USED.

OFFICE OF THE CITY ENGINEER
CANTON, OHIO
DANIEL J. MOEGLIN, P.E., CITY ENGINEER
2436 30th St. NE 44705 330-489-3381 www.cantonohio.gov/engineering

APPROVED DATE: FEB. 2012

APPROVED BY: JTD

DRAWING FILE NAME: ce_40-47_STREETSCAPE.dwg

REVISIONS		
DESCRIPTION	DATE	BY

STANDARD DRAWING NO. 46

BASEMENT/VAULT ABANDONMENT

CONSTRUCTION DETAILS

SHEET 1 OF 1

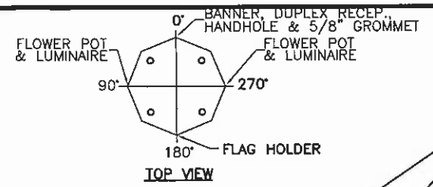

TOP VIEW

DESIGN NO.	BANNER ARMS
B2473-54-B14-Y1	YES
B2473-54-B14-Y2	NO

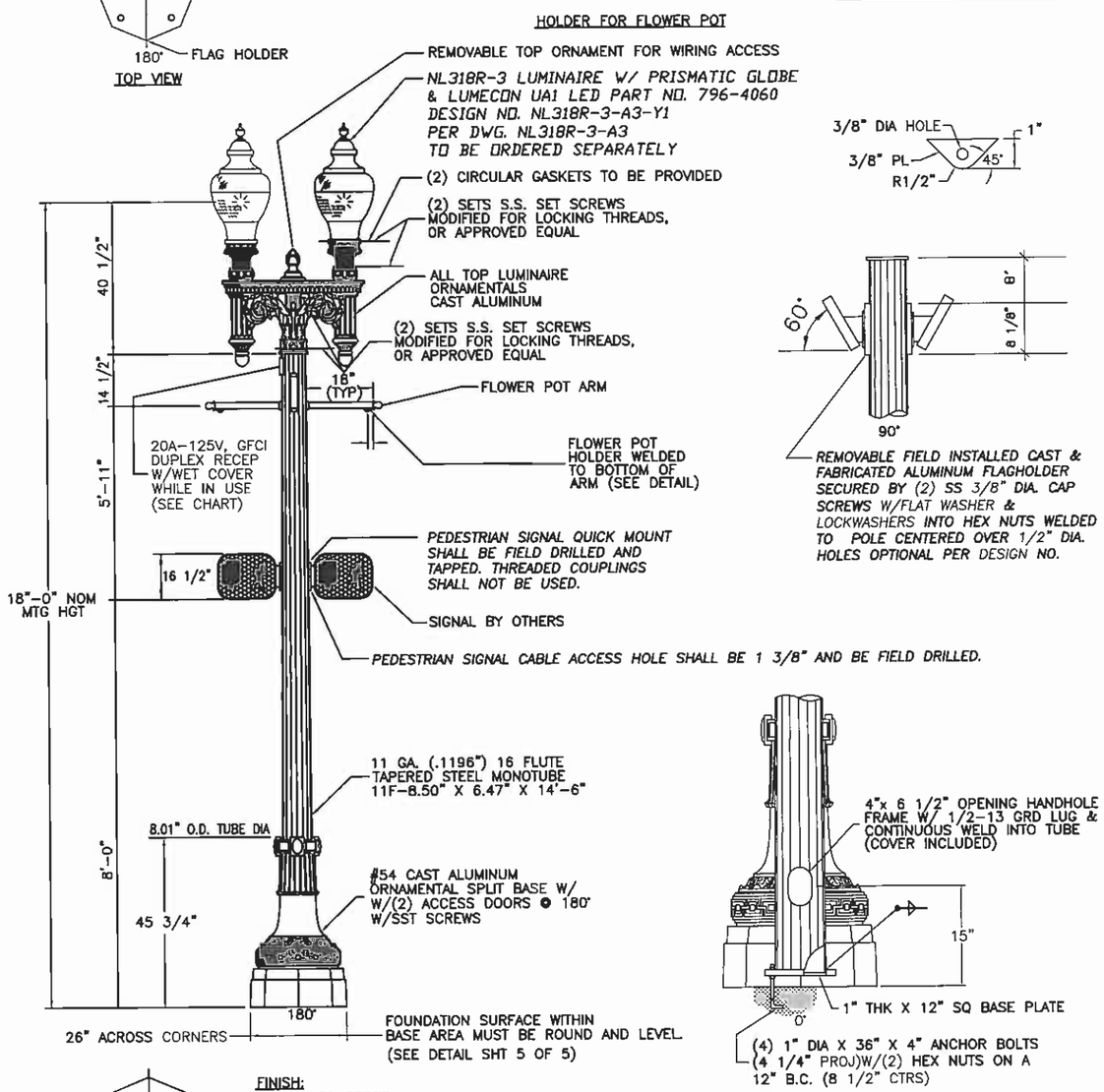

FINISH:
PER SALES ORDER.

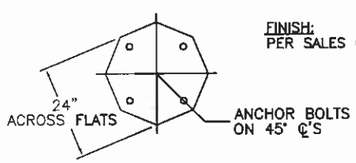

STATE: STATE	REQ# / SO# : REQ	REV	DESCRIPTION	DATE	REV BY	CHK BY
PROJECT NAME: PROJ-NAME			REVISIONS			

TITLE_1
TITLE_2

Union Metal Corporation

This document and the contents herein are proprietary and the property of Union Metal Corporation. This document is not to be, copied, reproduced, or used for any reason except for the purposes which it was issued without the express written consent of Union Metal Corporation. Furthermore Union Metal Corporation reserves the right to recall this document and all copies at any time for any reason.

DESIGNED BY	CHECKED BY	DATE	SCALE	ENG REF
DGNR	[illegible]	DATE	SCALE	ENG_REF

DRAWING-NUMBER | REVISION REV | SHEET SHT OF SHTS

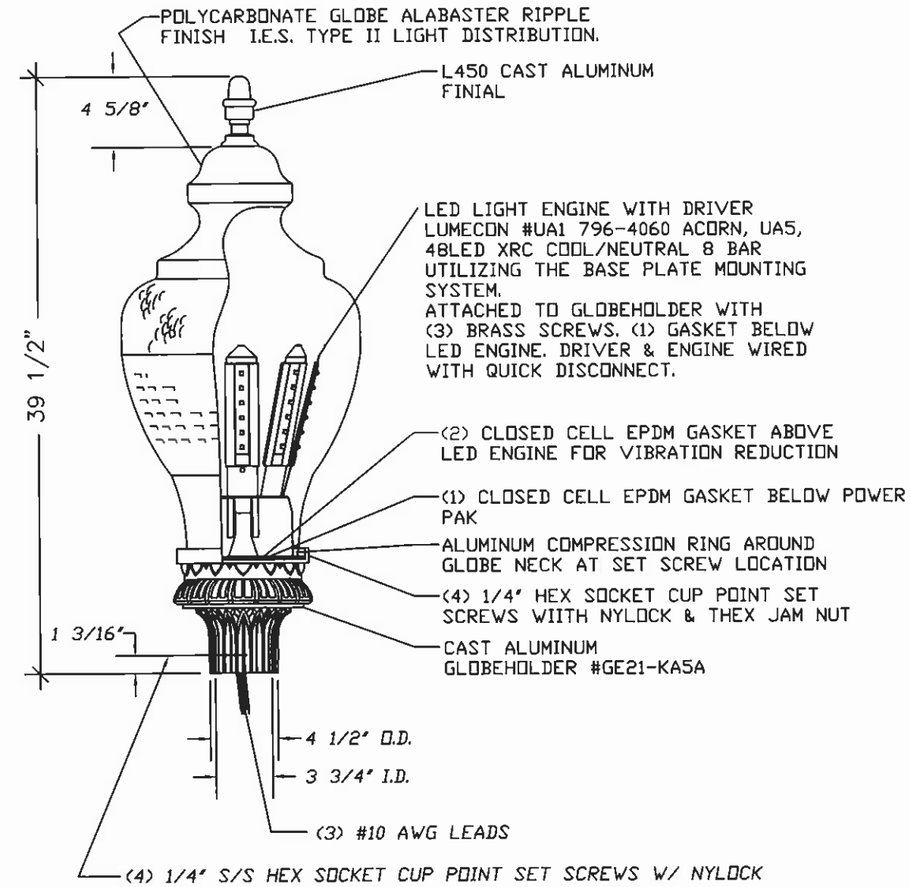

NOTES:
1. GLOBEHOLDER & FINIAL POWDER COATED CITY OF CANTON CBD GREEN.
2. GLOBE STREET SIDE POSITIONED BETWEEN TWO LED BARS. STREET SIDE OF LUMINAIRE MARKED ON OUTSIDE OF GLOBEHOLDER.

STATE: STATE	REQ# / SO# : REQ	REV	DESCRIPTION	DATE	REV BY	CHK BY
PROJECT NAME: PROJ-NAME			REVISIONS			

NOSTALGIA LUMINAIRE NL318R WITH LED

Union Metal Corporation

This document and the contents herein are proprietary and the property of Union Metal Corporation. This document is not to be, copied, reproduced, or used for any reason except for the purposes which it was issued without the express written consent of Union Metal Corporation. Furthermore Union Metal Corporation reserves the right to recall this document and all copies at any time for any reason.

DESIGNED BY	CHECKED BY	DATE	SCALE	ENG REF
DGNR	[illegible]	DATE	SCALE	ENG_REF

DRAWING-NUMBER | REVISION REV | SHEET SHT OF SHTS

OFFICE OF THE CITY ENGINEER
CANTON, OHIO
DANIEL J. MOEGLIN, P.E., CITY ENGINEER
2436 30th St. NE 44705 330-489-3381 www.cantonohio.gov/engineering

APPROVED DATE: APRIL 2012

APPROVED BY: EEM

DRAWING FILE NAME:
ce_61-65_LIGHTPOLES.dwg

REVISIONS

DESCRIPTION	DATE	BY

STANDARD DRAWING NO. 63

NOSTALGIA LIGHT POLE & LUMINAIRE

SHEET 1 OF 1

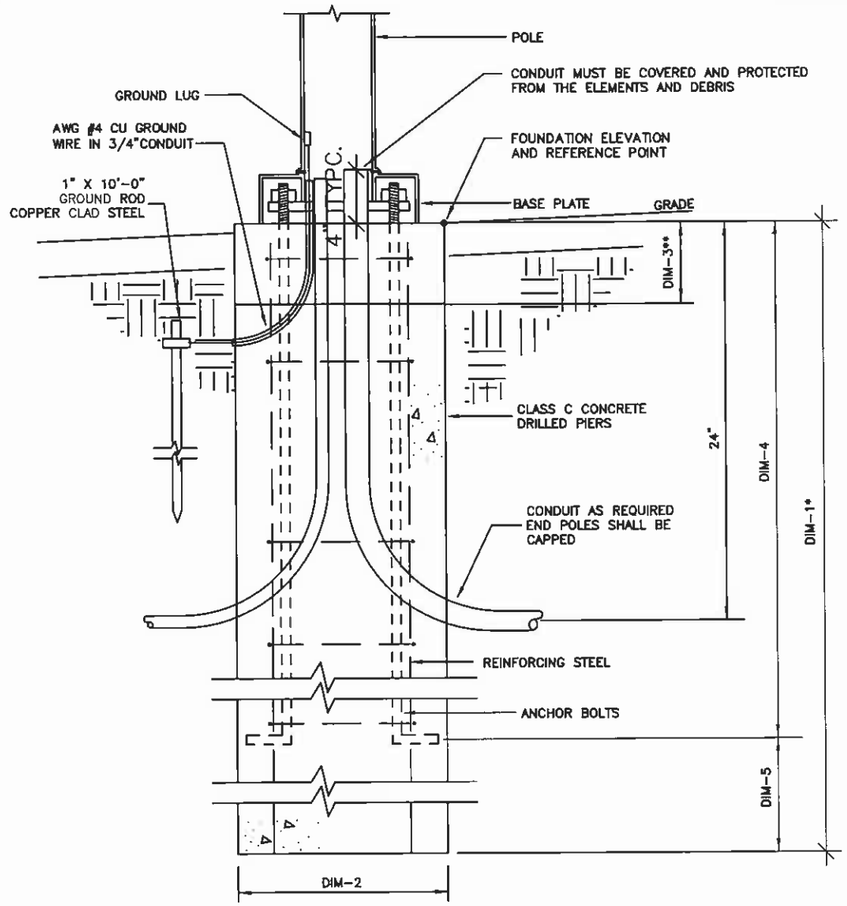

NOSTALGIC FOUNDATION DETAIL

NO SCALE

NOTES:

1. ALL FOUNDATIONS SHALL BE DRILLED PIERS TO AVOID DISTURBING SURROUNDING SOIL. A TEMPORARY STEEL CASING MAY BE REQUIRED. IF UTILITIES OR ANOTHER CONFLICT IS IN CLOSE PROXIMITY TO THE FOUNDATION, THEN THOSE FOUNDATIONS MAY HAVE TO BE EXCAVATED BY HAND.
2. ANCHOR BOLT PATTERN SHALL BE PROVIDED BY POLE MANUFACTURER (U.M.C.).
3. REINFORCING STEEL SHALL BE ASSEMBLED IN CAGES USING #4 TIES.
4. FOUNDATION TOP SHALL BE ROUND AND LEVEL FOR DECORATIVE HOUSING.

* MININUM DEPTH MAY VERY BASED ON SOIL CONDITION.
** ONLY APPLICABLE IN SIDEWALK AREAS.
A. TUBE TO BE PLACED W/TOP AT LEAST 1" ABOVE PROJECTED FINISHED SIDEWALK GRADE.
B. FOUNDATION TO BE POURED TO A MIN. 8" BELOW PROJECT FINISHED SIDEWALK GRADE.
C. ONCE SIDEWALK IS PROVIDED AND/OR FINAL FINISHED GRADE ESTABLISHED, TUBE SHALL BE CUT TO PROPER ELEVATION AND FOUNDATION CAP POURED AND LEVELED WITHIN THE TUBE.
1. CUT AND REMOVE EXPOSED TUBE TO FINISHED GRADE AFTER CONCRETE IS CURED.

FOUNDATION	DIM-1*	DIM-2	DIM-3**	DIM-4	DIM-5
SIGNAL	9'-0"	36"	N/A	84"	24"
LUMINARIES	6'-0"	30"	8"	32"	40"
PEDESTRIAN	4'-0"	24"	8"	30"	18"

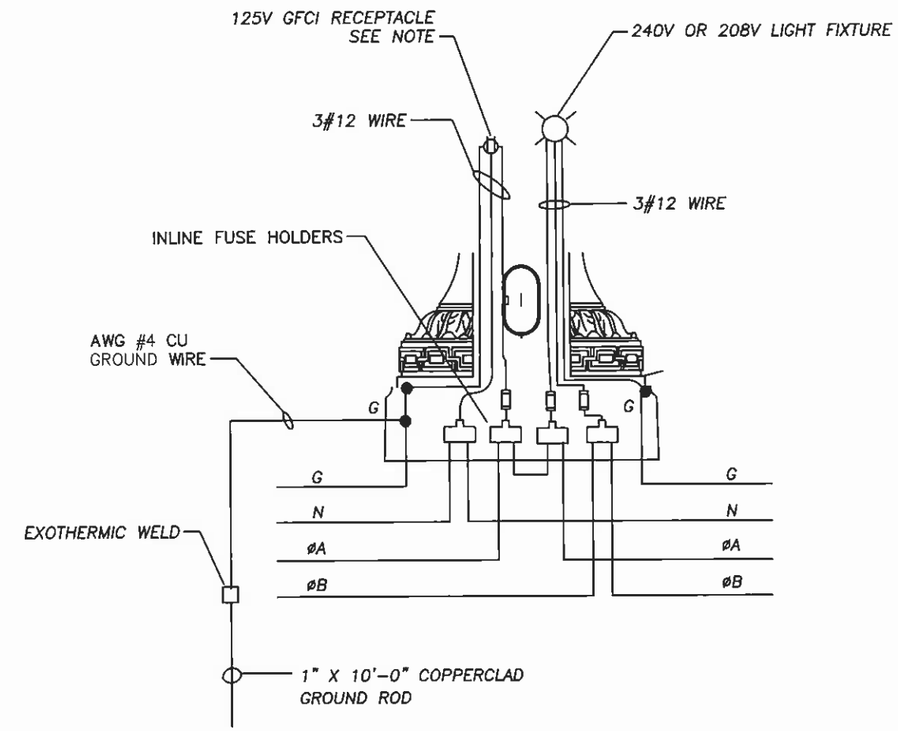

POLE WIRING DIAGRAM

NO SCALE

NOTE:

1. THE COST FOR WIRING TO ALL NOSTALGIA LUMINARIES AND RECEPTACLES SHALL BE INCIDENTAL TO THE NOSTALGIA BID ITEMS. ALL WIRING IN POLES AND CONDUITS TO LIGHTS AND RECEPTACLES SHALL BE THE RESPONSIBILITY OF THE CONTRACTOR.

2. ALL WIRING INTO EACH NOSTALGIA POLE BASE SHALL BE NO. 6 AWG WIRE AND CONNECTED TO IN-LINE FUSE HOLDERS. THE COST FOR THIS WIRE SHALL BE INCIDENTAL TO THE NOSTALGIA BID ITEMS.

3. IN-LINE FUSE HOLDERS SHALL BE BUSSMAN (HEB-AW-RYC). INSTALL FUSES IN PHASE LINES AND SOLID LINK IN NEUTRAL (HET-AW-RYC) FOR GROUND USE SPLIT BOLT CONNECTOR. COPPER GROUND CABLE SHALL BE EXOTHERMICALLY WELDED TO THE GROUND ROD. RUN CABLE FREE END THROUGH 3/4" EMT AND CONNECTED AS SHOWN IN THE POLE WIRING DIAGRAM. THE COST FOR THE IN-LINE FUSE HOLDERS AND ALL RELATED ITEMS SHALL BE INCIDENTAL TO THE NOSTALGIA BID ITEMS.

4. THE POLE RECEPTACLE SHALL BE ALTERNATELY WIRED TO PHASE A AND PHASE B AS SHOWN IN THE POLE WIRING DIAGRAM.

5. FOR LIGHTS, USE 5 AMP FUSES. FOR RECEPTACLES, USE 10 AMP FUSES. AMP RATINGS SHALL BE BASED UPON 75 DEGREE C RATINGS.

6. UNLESS OTHERWISE NOTED IN THESE PLANS, ALL WIRING SHALL BE MINIMUM NO. 12 AWG, COPPER, 600 VOLT RATED WITH THE EXCEPTION OF NO. 14 AWG, COPPER SHALL BE PERMISSIBLE FOR CONTROL CIRCUITRY. THE FOLLOWING SHALL APPLY TO ALL WIRING:

A. ALL WIRING SHALL BE STRANDED "XHHN/XHWN".
B. UNDERGROUND BRANCH CIRCUIT WIRING SHALL BE "XHHW".

OFFICE OF THE CITY ENGINEER
CANTON, OHIO
DANIEL J. MOEGLIN, P.E., CITY ENGINEER
2436 30th St. NE 44705 330-489-3381 www.cantonohio.gov/engineering

APPROVED DATE: APRIL 2012

APPROVED BY: EEM

DRAWING FILE NAME: ce_61-65_LIGHTPOLES.dwg

REVISIONS

DESCRIPTION	DATE	BY

STANDARD DRAWING NO. 65

NOSTALGIC POLE FOUNDATION & WIRING DIAGRAM

SHEET 1 OF 1

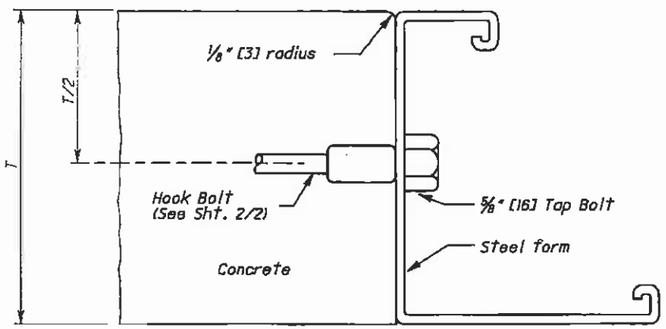

ACCEPTABLE METHOD OF FORMING JOINT

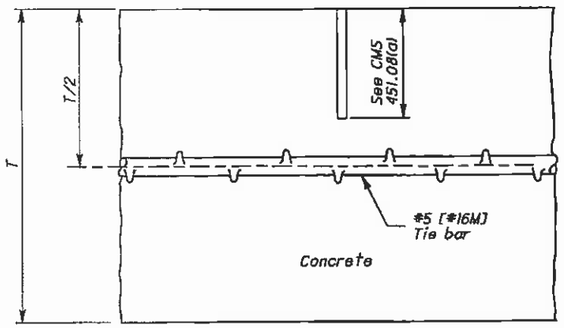

SAWED JOINT

NOTES

GENERAL: Longitudinal joints shall be used when specified on the typical section and shall be constructed as shown on this drawing in Items 451 and 452 Pavement and Item 305 Base.

The joint shall be on the centerline of the pavement unless otherwise shown on the plans. Where the pavement width exceeds 16' [5.0 m], an additional longitudinal joint shall be introduced into the jointing details as directed by the Engineer.

Tie bars shall be #5 [#16M] deformed bars. A satisfactory device shall be used to hold the tie bars in proper position or they may be installed by a mechanical installing device. Tie bars shall be centered on the longitudinal joint as nearly as practical.

BUTT JOINT: The longitudinal joint between adjoining slabs poured in separate operations shall be a butt joint with hook bolts or tie bars, unless otherwise shown on the plans. Bent tie bars shall not be permitted.

TYPE D (DRILLED TIED LONGITUDINAL) JOINT: Type D joints shall be constructed in accordance with CMS 255.05. The nylon or plastic retention disc shall be clear or opaque white in color. Grout shall meet the requirements of CMS 255.02. 5/8" [16] expansion anchors, FF-S-325, Group VIII, Type I or Group II Type 4, Class I may be used lieu of the #5x24" [#16Mx600] deformed bar and shall be installed according to the manufacturer's recommendations.

The use of self drilling expansion shield anchors, FF-S-325, Group III, Type I (a) and (c) shall not be permitted.

See Sheet 2/2 for additional details.

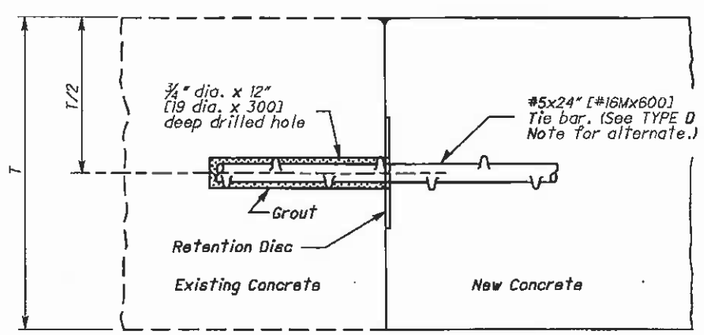

TYPE D (DRILLED TIED LONGITUDINAL) JOINT

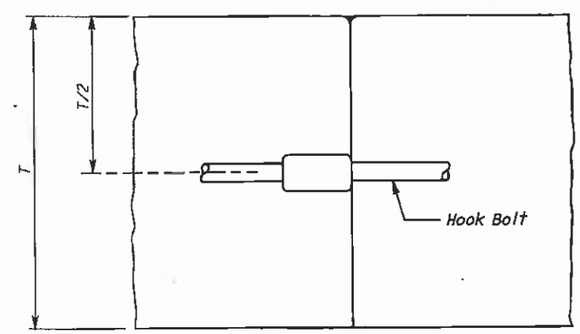

BUTT JOINT
w/ HOOK BOLT

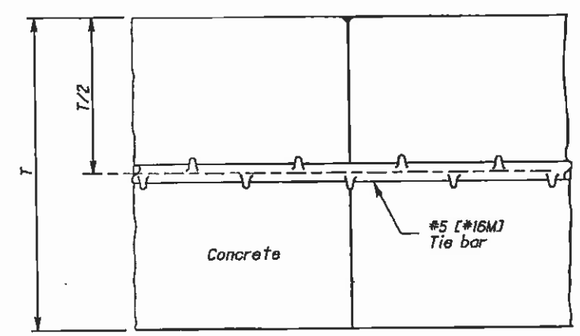

BUTT JOINT
W/ TIE BAR

THIS DRAWING REPLACES BP-2.1 DATED 7-16-04.

STATE OF OHIO DEPARTMENT OF TRANSPORTATION

7-18-08
DATE

PAVEMENT ENGINEERING ADMINISTRATOR

PAVEMENT DESIGN ENGR D. MILLER

ALL METRIC DIMENSIONS (IN BRACKETS [ ]) ARE IN MILLIMETERS UNLESS OTHERWISE NOTED.

OFFICE OF ROADWAY ENGINEERING

STANDARD ROADWAY CONSTRUCTION DRAWING

LONGITUDINAL PAVEMENT JOINTS

SCD NUMBER BP-2.1

1/2

x:\Standards\Publications\Transmittals\2008-04-18\Published (black) set\SCD\bp21_V8.dgn 14-JUL-2008 12:18PM dfocke

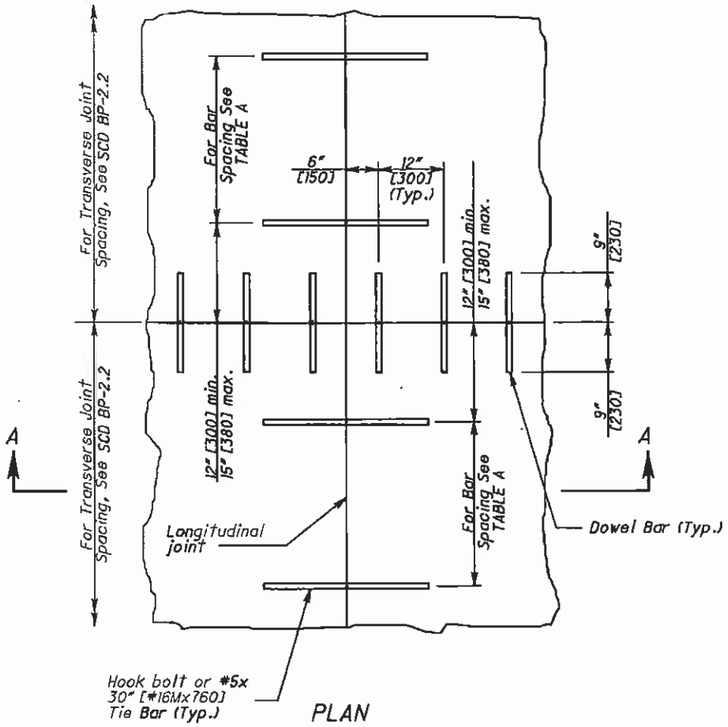

PLAN

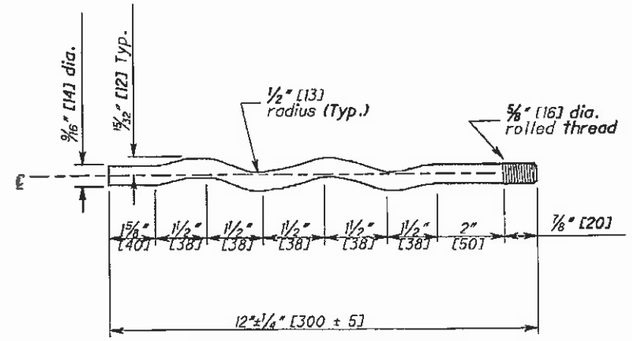

HOOK BOLT ALTERNATE

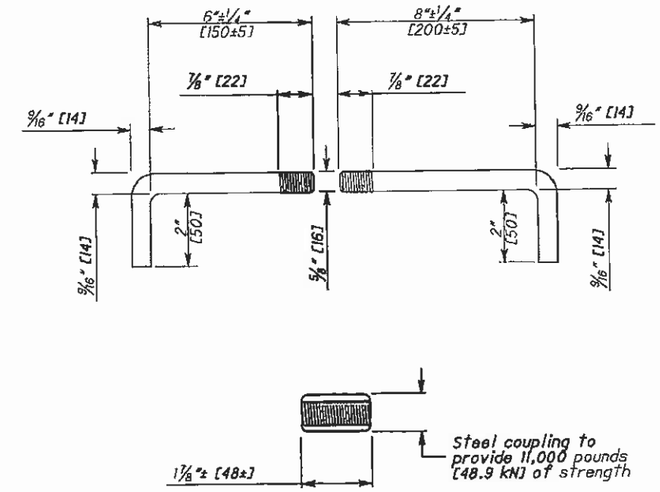

HOOK BOLT

TABLE A			
Thickness of Pavement	Transverse Joint Spacing	Number of Tie Bars per Slab	Max. spacing between Tie Bars
10" [250] or less	15' [4.6 m]	7	26" [660]
	21' [6.5 m]	10	26" [660]
Greater than 10" [250]	15' [4.6 m]	9	20" [508]
	21' [6.5 m]	13	20" [508]

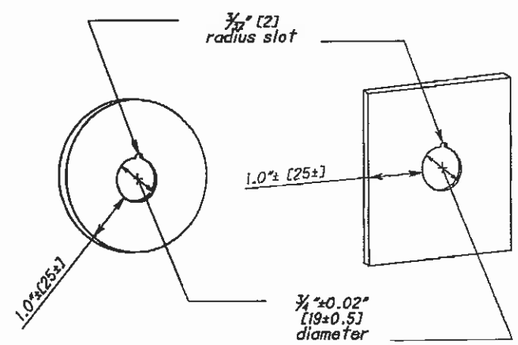

NYLON OR PLASTIC GROUT RETENTION DISCS FOR DOWEL/TIE BARS

(1/16" [1.6] min. thick)

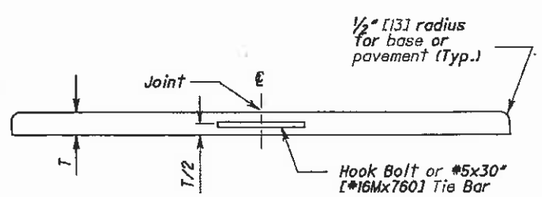

SECTION A-A

TIE BAR OR HOOK BOLT SPACING

NOTES

EDGING: Edge joints with a thin metal edger having a radius of 1/8" [3]. Any impression left in the surface of the pavement by the flat part of the edging tool shall be eliminated.

In lieu of the above method the longitudinal joint may be constructed in accordance with CMS 451.08(a).

HOOK BOLTS: Threaded hook bolts and alternates shall be turned to a tight fit when installed in couplings. Ensure the coupling is located on the same side of the joint as the shorter (6" +/-1/4" [150 +/-5] hook bolt.

METAL STRENGTH: Tie bars, hook bolts assemblies, and the hook bolt alternate shall have a minimum strenght of 11,000 pounds [48.9 kN].

SPACING: Tie bars shall not be located within 12" [300] of any transverse joint.

THIS DRAWING REPLACES BP-2.1 DATED 7-16-04.

STATE OF OHIO DEPARTMENT OF TRANSPORTATION

PAVEMENT ENGINEERING ADMINISTRATOR — 7-18-08 DATE

PAVEMENT DESIGN ENGR: D. MOLLER

ALL METRIC DIMENSIONS (IN BRACKETS [ ]) ARE IN MILLIMETERS UNLESS OTHERWISE NOTED.

OFFICE OF ROADWAY ENGINEERING

STANDARD ROADWAY CONSTRUCTION DRAWING

LONGITUDINAL PAVEMENT JOINTS

SCD NUMBER BP-2.1

2 / 2

X:\Standards\Publications\Transmittals\2008-04-18\Published (black) set\SCD\bp21_V8.dgn 14-JUL-2008 12:54PM dfocke

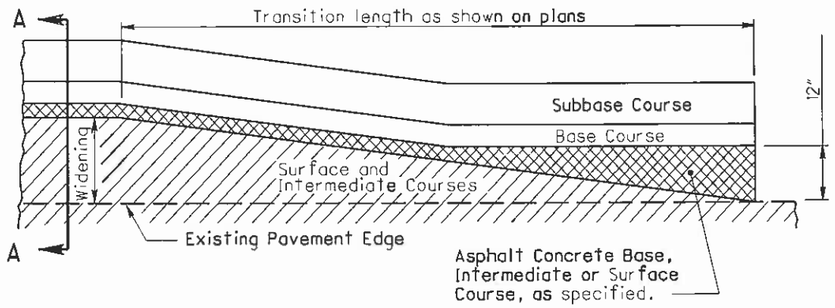

PLAN

MERGING EDGE OF PAVEMENT WIDENING WITH EDGE OF EXISTING PAVEMENT

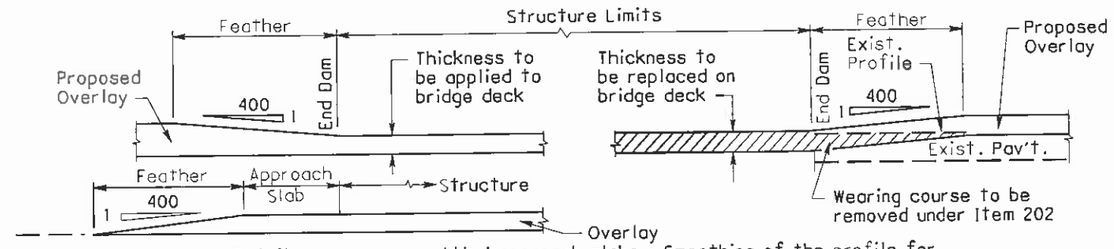

Details assume non-settled approach slabs. Smoothing of the profile for settlement is required per plan grades or as directed by the Engineer.

FEATHERING AT STRUCTURES

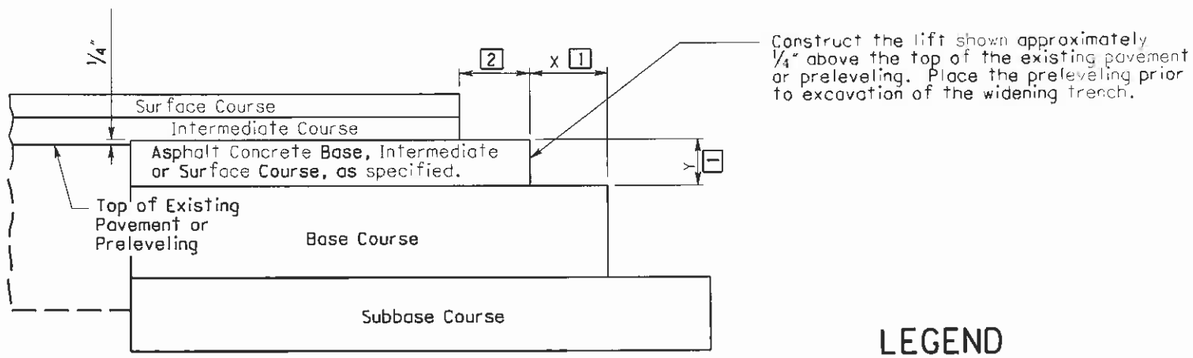

SECTION A-A

COURSE DETAIL FOR WIDENING

LEGEND

1. The extended width (X) of a base or subbase lift shall be equal to the depth (Y) of the overlaying lift or 6", whichever is greater, or as shown on the plans.
2. The extended width shall be equal to the combined thickness of the surface and intermediate courses, or 4 inches, whichever is greater.
3. Permissible removal and replacement.

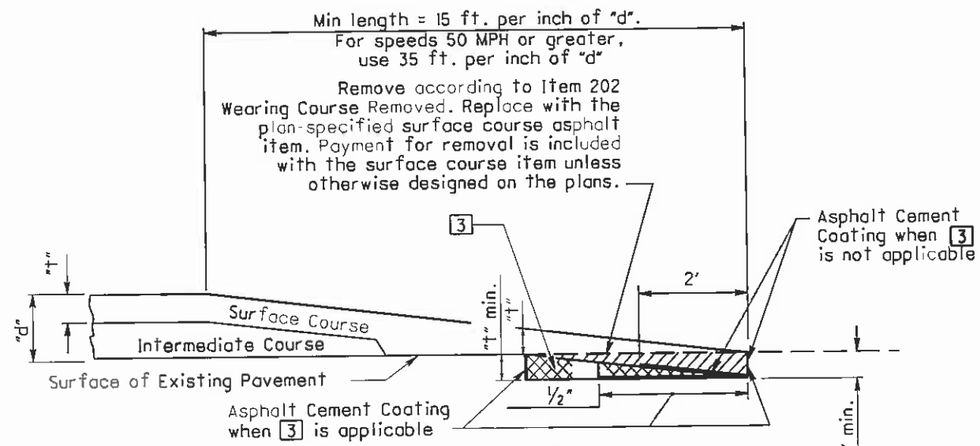

BUTT JOINT TYPE

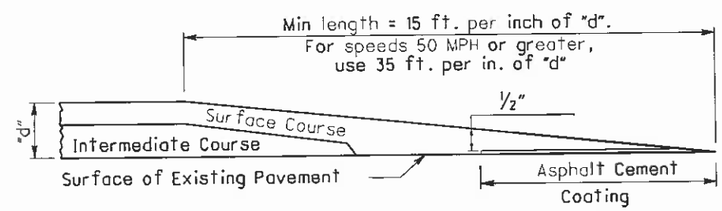

TAPER EDGE TYPE

NOTE: Either butt or taper type may be used unless type is specified by the plan.

PLACING FEATHERED AREAS

Values for "t" and "d" are obtained from the plan.

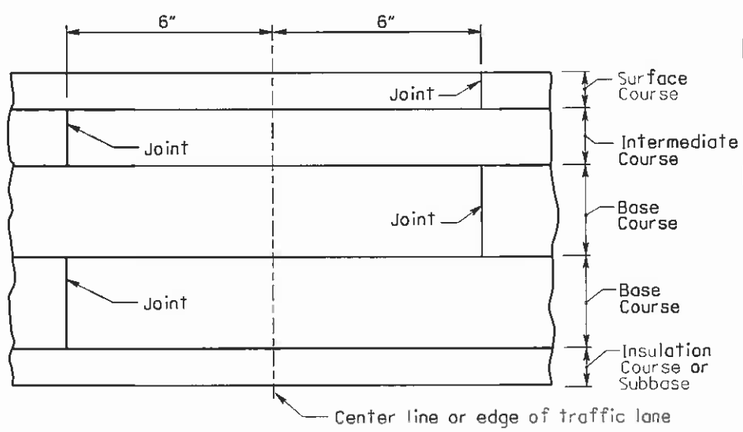

LAPPING LONGITUDINAL JOINTS

THIS DRAWING REPLACES BP-3.1 DATED 01-20-12.

STATE OF OHIO DEPARTMENT OF TRANSPORTATION

04-20-12
DATE

ADMINISTRATOR

STDS. ENGINEER D. Miller

OFFICE OF ROADWAY ENGINEERING

STANDARD ROADWAY CONSTRUCTION DRAWING

ASPHALT PAVING

SCD NUMBER BP-3.1

1 / 2

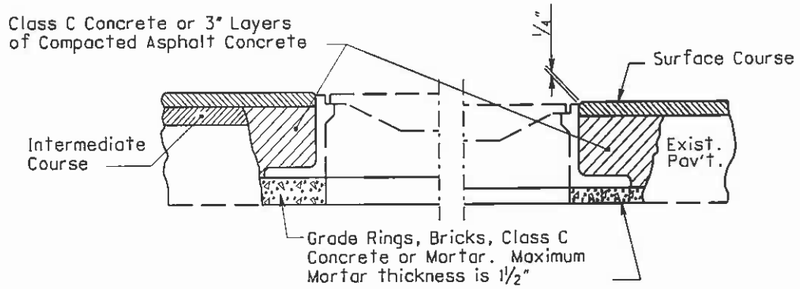

USING CONCRETE OR MORTAR

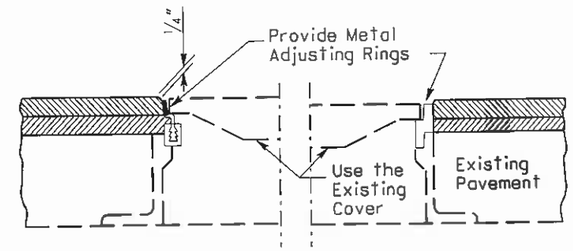

USING METAL ADJUSTING RINGS

Metal adjusting rings shall:
(a) attach securely to the existing frame by welding or mechanical devices;
(b) consist either of cast metal having an integral rim and seat, or be fabricated metal with a sturdy connection between the seat and rim; and
(c) provide an even seat for the manhole cover.
In addition, the adjusting ring type shall be a design acceptable to the local governmental agency responsible for street and sewer maintenance. Any installation unacceptable to the Engineer shall be replaced by the Contractor at his expense.

MANHOLES ADJUSTED TO GRADE

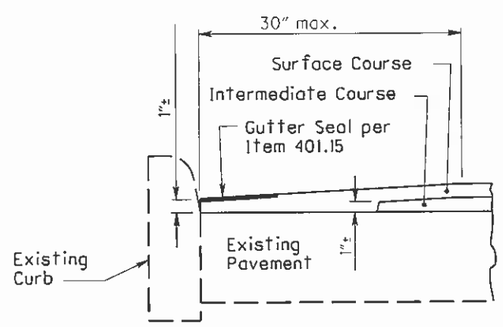

Special care shall be taken during construction to obtain maximum compaction of bituminous concrete in gutters.

GUTTER FINISH

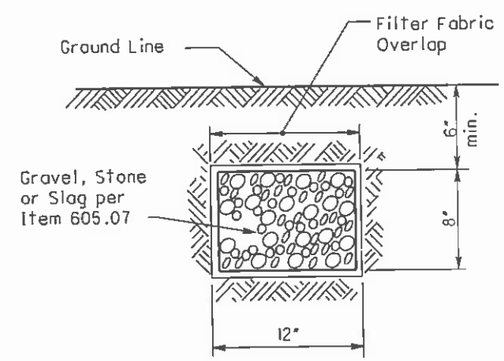

Aggregate drains to be placed where and as directed by Engineer. Provide Filter Fabric when specified as a separate pay item.

AGGREGATE DRAIN

THIS DRAWING REPLACES BP-3.1 DATED 01-20-12.

STATE OF OHIO DEPARTMENT OF TRANSPORTATION
ADMINISTRATOR
04-20-12
DATE

STDS. ENGINEER
D. Miller

OFFICE OF
ROADWAY
ENGINEERING

STANDARD ROADWAY CONSTRUCTION DRAWING
ASPHALT PAVING

SCD NUMBER
BP-3.1

2/2

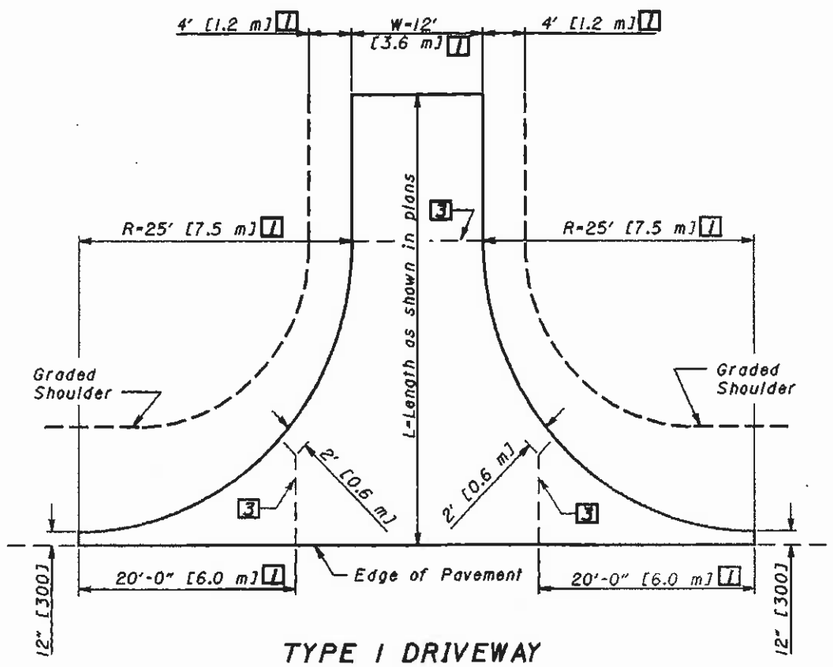

TYPE 1 DRIVEWAY

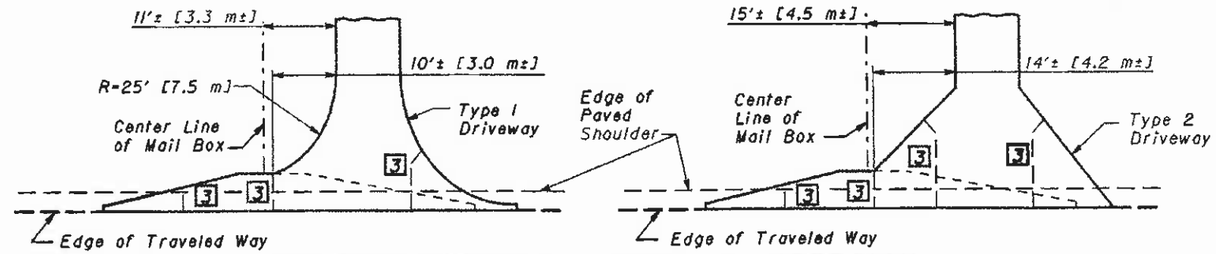

COMBINED DRIVEWAY & MAIL BOX APPROACH

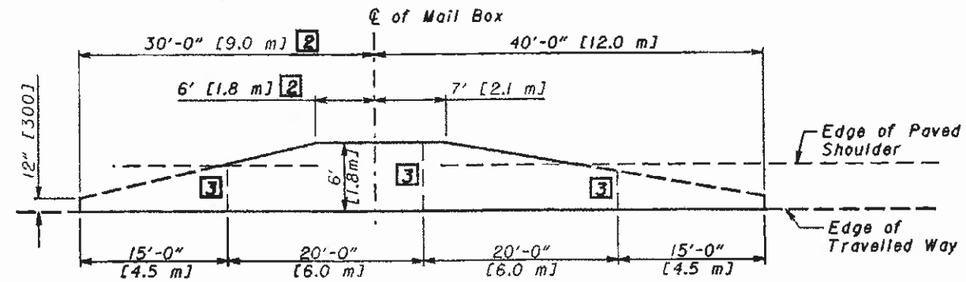

TYPICAL MAIL BOX APPROACH

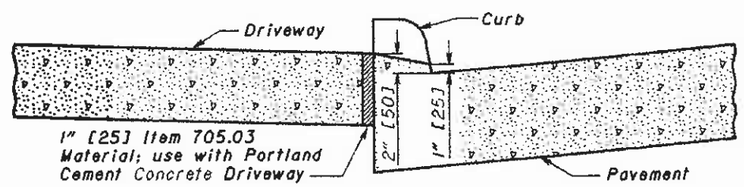

DROP CURB DETAILS AT DRIVEWAYS

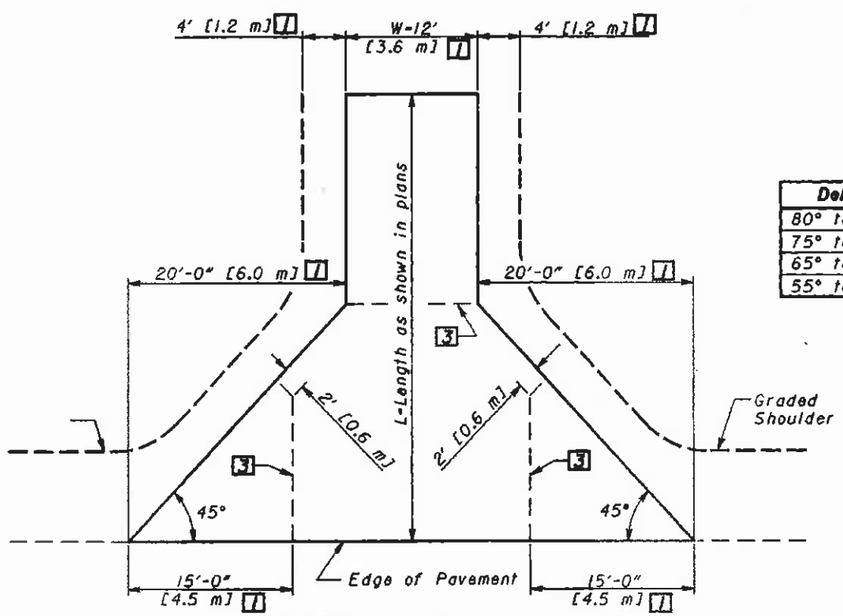

TYPE 2 DRIVEWAY

Delta	A	B
80° to 90°	20' [6.0 m]	20' [6.0 m]
75° to 85°	25' [7.5 m]	16' [4.8 m]
65° to 75°	28' [8.4 m]	13' [4.0 m]
55° to 65°	33' [10.0 m]	12' [3.6 m]

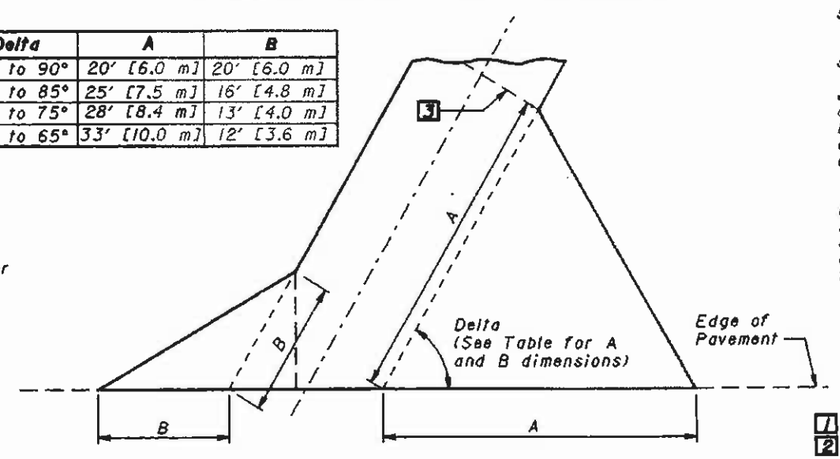

TYPE 2 SKEWED DRIVEWAY

Transition from Standard Curb Section to Drop Curb Section to be made in 18" [450] distance from Driveway

NOTES

GENERAL: The design details shown here shall govern the construction of driveways unless otherwise shown in the project plans.

The pavement type and thickness shall be specified in the project plans.

Driveway and mail box approaches shall be combined when feasible.

JOINTS: Impressed joints for portland cement concrete driveways shall be 1/4" [6] minimum width by 3"± [75±] depth and shall be sealed with Item 705.04 or ASTM D 1850.

In addition to the joints shown here, impressed joints without tie bars shall be placed in portland cement concrete driveways at intervals not to exceed 17' [5.2 m] in the portion of the driveway beyond the flare.

LEGEND

1 Unless otherwise shown in the plans.
2 Add 3' [0.9 m] for each additional Mail Box
3 Impressed Joint without Tie Bars for Portland Cement Surface

THIS DRAWING REPLACES BP-4.1 DATED 7-28-00.

OHIO DEPARTMENT OF TRANSPORTATION
ROADWAY DESIGN ENGINEER
7-16-04
DATE

STDS. ENGR. D. Focke

All metric dimensions [in brackets] are in millimeters unless otherwise noted.

ROADWAY ENGINEERING SERVICES

STANDARD ROADWAY CONSTRUCTION DRAWING
DRIVEWAYS

NUMBER BP-4.1

1/1

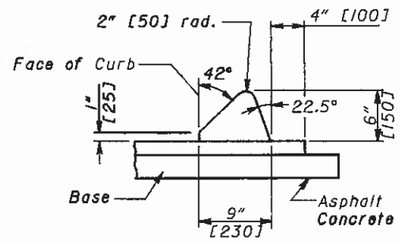

TYPE 1

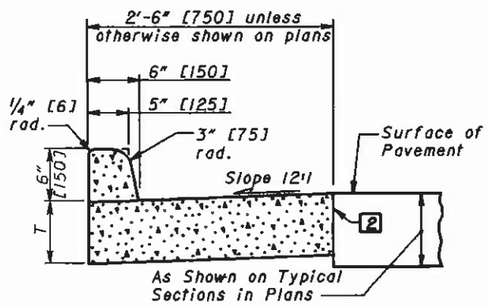

TYPE 2

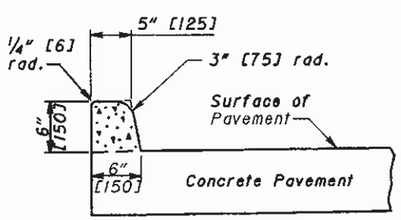

TYPE 2-A

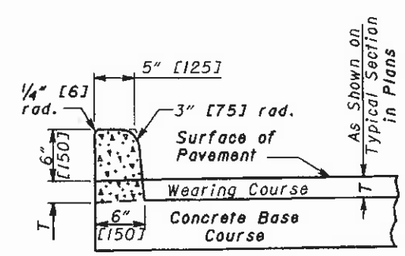

TYPE 2-B

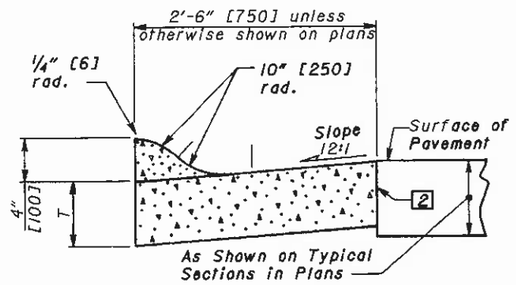

TYPE 3

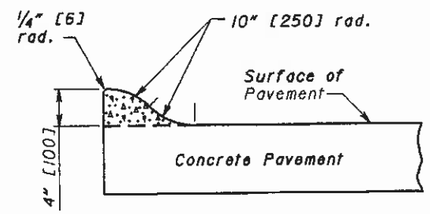

TYPE 3-A

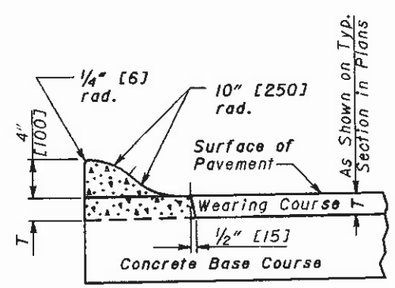

TYPE 3-B

NOTES

GENERAL: This drawing shows alternate types of curb that may be used on various types of pavement. The typical section of the project shows the type to be used, also the thickness of the edge of the pavement or the edge of the curb and gutter section.

JOINTS: 1" [25] expansion joints shall extend up to the top of the curb and shall be constructed in the curb and gutter section in such a manner that the joint seal will extend the full width of the gutter and into the curb face a sufficient distance to seal the joint to an elevation of at least 2" [50] above the flow line of the gutter. Dowel bars shall be used in the curb and gutter section at expansion joints and to the surface fo the pavement.

Transverse expansion joint material shall meet the requirements of Item 705.03.

GUTTER PLATE THICKNESS: Thickness of gutter plate "T" shall be 9" [230] unless otherwise shown on the plans.

TOLERANCES: Dimensional tolerances are as follows:
Curbs: -1/32" to +1/4" [-1 to +5],
Gutters: 0 to +1/2" [0 to +12].

LEGEND

1 Expansion joint material and joint sealer are not required for the portion of the curb that is adjacent to a flexible pavement type. Both materials are required, as detailed, for the full height of rigid pavement and concrete bases.

2 Butt joints shall be provided between combined curb-and-gutter and new or existing rigid pavements, with tie bars or hook bolts provided at intervals of 5' [1.5 m]. See **SCD BP-2.1** for details of tie bars and hook bolts.

If the combined curb-and-gutter adjoins a new rigid base or an existing rigid base or pavement that is to be surfaced with bituminous material, a butt joint shall also be provided. However, tie bars or hook bolts shall be omitted when the vertical overlap ("V" in detail below) between the curb-and-gutter and rigid pavement is less than 7" [175].

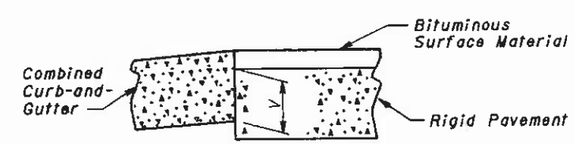

THIS DRAWING REPLACES BP-5.1M DATED 10-28-94.

OHIO DEPARTMENT OF TRANSPORTATION
ROADWAY DESIGN ENGINEER — DATE 1-28-00

REVISIONS

SPEC. ENGR. N. Evans
DRAWN D. Focke

All metric dimensions (in brackets [ ]) are in millimeters unless otherwise noted.

ROADWAY ENGINEERING SERVICES

STANDARD ROADWAY CONSTRUCTION DRAWING
CONCRETE CURBS AND COMBINED CURB AND GUTTERS

NUMBER BP-5.1

1/2

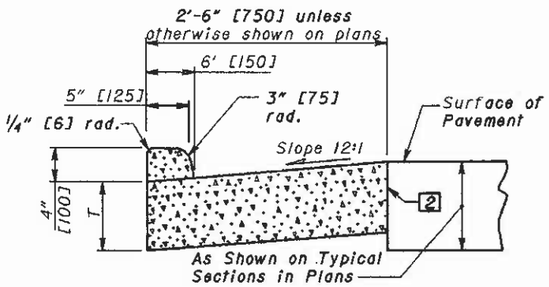

TYPE 4

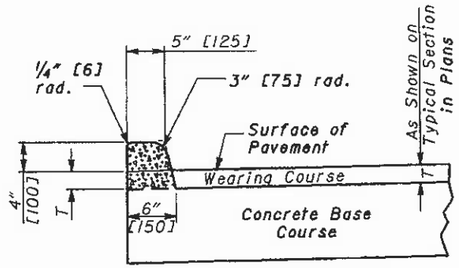

TYPE 4-B

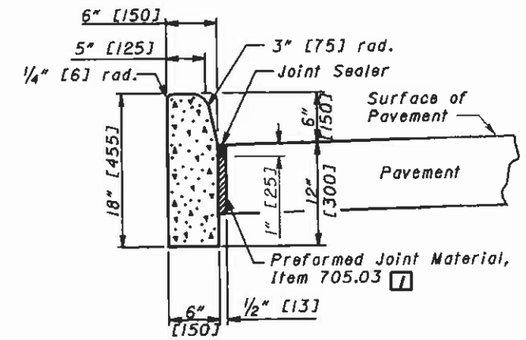

TYPE 6

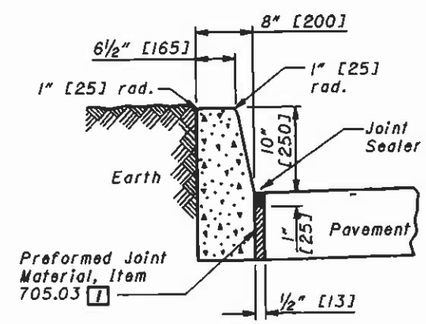

TYPE 7

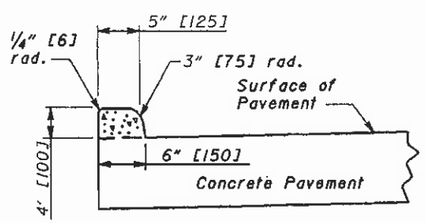

TYPE 4-A

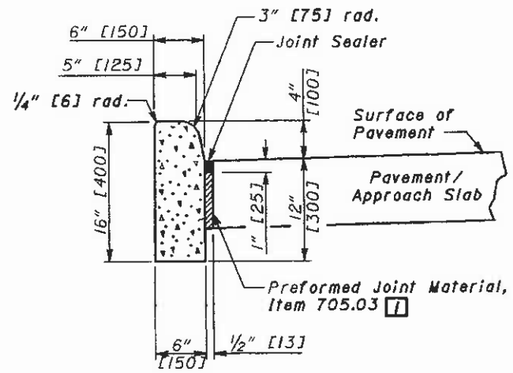

TYPE 4-C

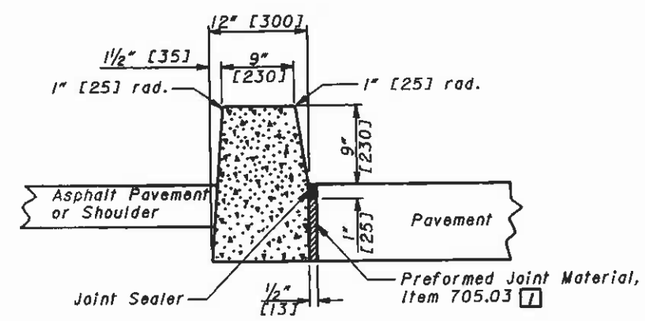

TYPE 8

See Sheet 1 of 2 for Notes and Legend.

THIS DRAWING REPLACES BP-5.1M DATED 10-28-94.

OHIO DEPARTMENT OF TRANSPORTATION
ROADWAY DESIGN ENGINEER — DATE 7-28-00

REVISIONS

SPDS. ENGR. M. Evans
DRAWN D. Focke

All metric dimensions in brackets [ ] are in millimeters unless otherwise noted.

ROADWAY ENGINEERING SERVICES

STANDARD ROADWAY CONSTRUCTION DRAWING
CONCRETE CURBS AND COMBINED CURB AND GUTTERS

NUMBER BP-5.1

2/2

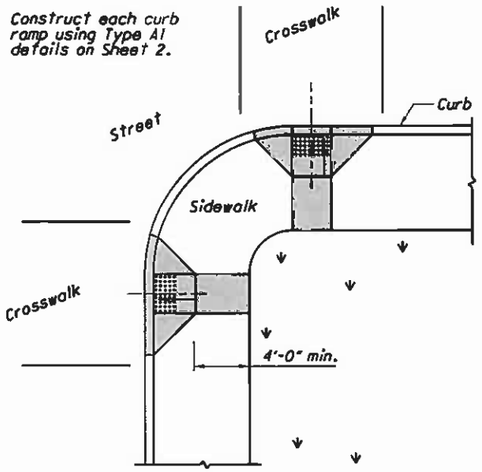

Use curb ramps with flared sides at locations with wide sidewalks.

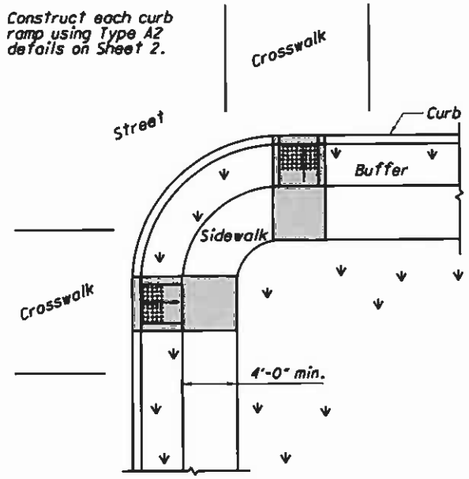

Use curb ramps with returned curbs where buffer is wide enough to accommodate ramp slope.

PERPENDICULAR CURB RAMPS

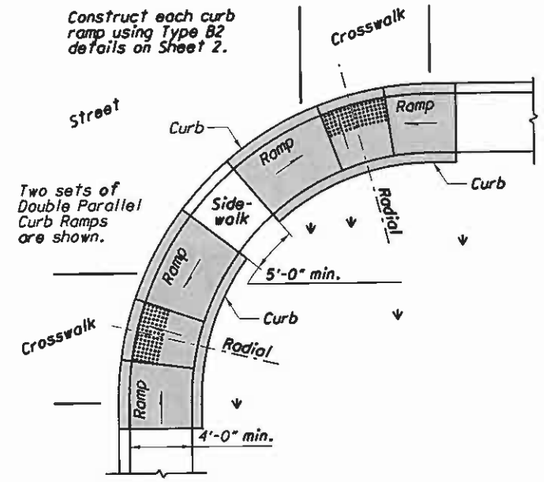

Place on streets having wide turning radius and where sidewalks are narrow.

PARALLEL CURB RAMPS

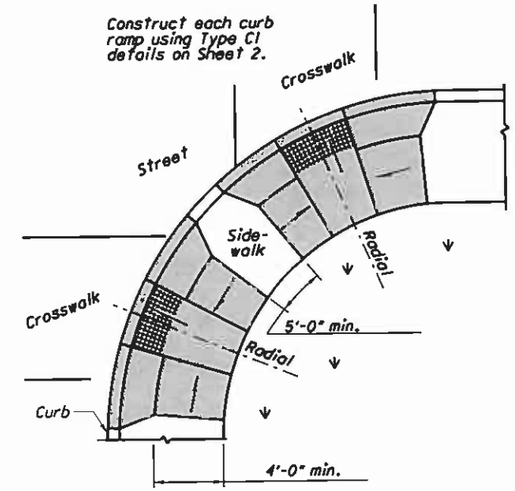

Curb ramp placement where streets have wide turning radius, and sufficient sidewalks width.

COMBINATION CURB RAMPS

PREFERRED CONSTRUCTION PLACEMENT

NOTES

GENERAL: This drawing shows curb ramp types details and placement examples for curb ramp construction, including the installation of detectable warnings.

Curb ramp types are shown on Sheet 2 and include Perpendicular, Parallel, and Combined types as specified to be constructed in the locations shown on the project plans.

Curb ramps added to an existing intersection or walk should be individually detailed on the project plans to assure that the design is appropriate for site constraints and all items can be constructed to ADA standards. The contractor may adjust the placement of curb ramps if existing field conditions warrant with the approval of the Engineer.

DETECTABLE WARNINGS: Install Detectable Warnings on each curb ramp with approved materials, as shown on Sheet 3. Install these proprietary products as per manufacturer's written instructions.

DRAINAGE: Contractor is to ensure the base of each constructed curb ramp allows for proper drainage, without exceeding allowable cross slope or ramp slopes. Vertical change in level exceeding 1/8" between the 1) pavement and gutter, and 2) gutter and ramp, are not allowed.

SURFACE TEXTURE: Texture concrete surfaces by coarse brooming transverse to the ramp slopes to be rougher than the adjacent walk.

JOINTS: Provide expansion joints in the curb ramp as extensions of walk joints and consistent with Item 608.03 requirements for a new concrete walk. Provide a 1/2" Item 705.03 expansion joint filler around the edge of ramps built in existing concrete walks. Lines shown on this drawing indicate the ramp edges and slope changes, and do not necessarily indicate joint lines.

PAYMENT: Measure and pay for the ramp area within the shaded limits of this drawing as Item 608 Curb Ramp, Square Foot. This includes the cost of the ramp curbing, detectable warnings, landing areas and any additional materials, installation, grading, forming, and finishing required within the shaded area.

Work beyond the shaded ramp/landing area is paid for as curb (609) and walk (608). Removal of existing curb, walk (or existing curb ramps) are paid under Item 202.

For at-grade crossing locations where only detectable warnings are required in order to acheive ADA compliance, measure and pay for the strip of detectable warnings as Item 608 Detectable Warning, Square Foot. The work to cast the tiles in place will also require removal of existing pavement (Item 202) to the nearest joint, or if no joint exists, a minimum of 4 feet.

Acceptable design on corners with wide turning radius where user is able to maneuver within crosswalk limits so as not to encroach into adjacent traveled lanes.

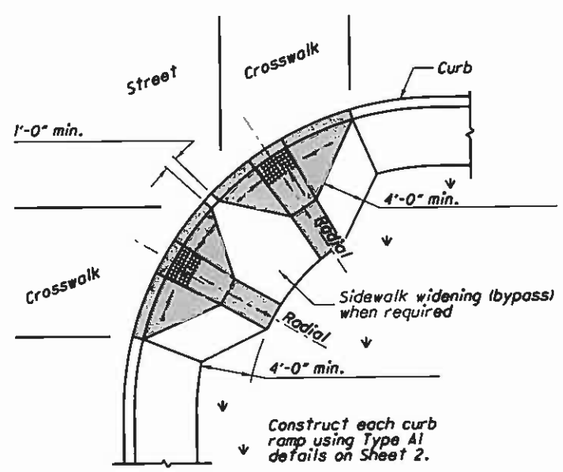

PERPENDICULAR RAMPS

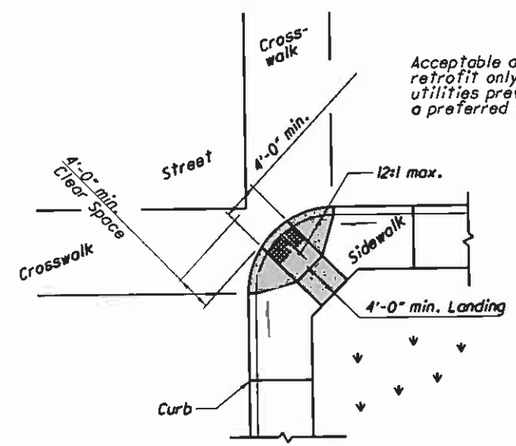

Acceptable design for retrofit only where utilities prevent using a preferred layout.

Use this design only for existing walks, and when site constraints prohibit other designs. The diagonal Type D ramp may be constructed as either a Perpendicular, Parallel or Combination curb ramp type. Avoid using where curb radii are less than 20'-0".

DIAGONAL RAMP (Type D)

ACCEPTABLE CONSTRUCTION PLACEMENT

STATE OF OHIO DEPARTMENT OF TRANSPORTATION
ADMINISTRATOR
10-15-10
DATE

STDS. ENGINEER M. Bline

OFFICE OF ROADWAY ENGINEERING

STANDARD ROADWAY CONSTRUCTION DRAWING
NEW CURB RAMPS
(with Detectable Warnings)

THIS DRAWING REPLACES BP-7.1 DATED 1-19-07.

SCD NUMBER BP-7.1

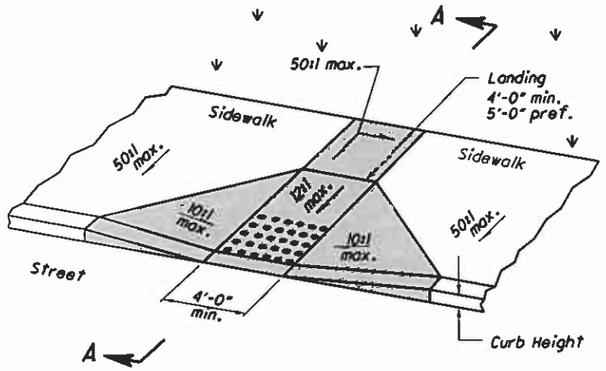

Type A1 (Perpendicular with flared sides)

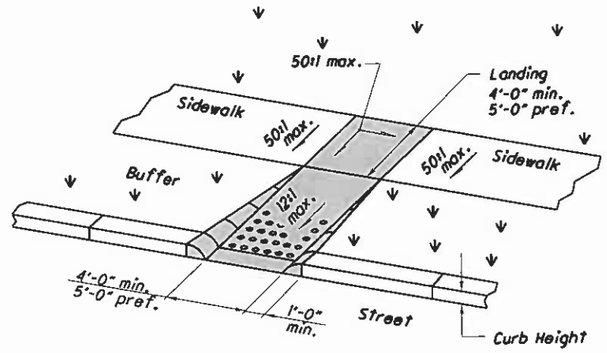

Type A2 (Perpendicular with returned curb)

PERPENDICULAR CURB RAMP DETAILS

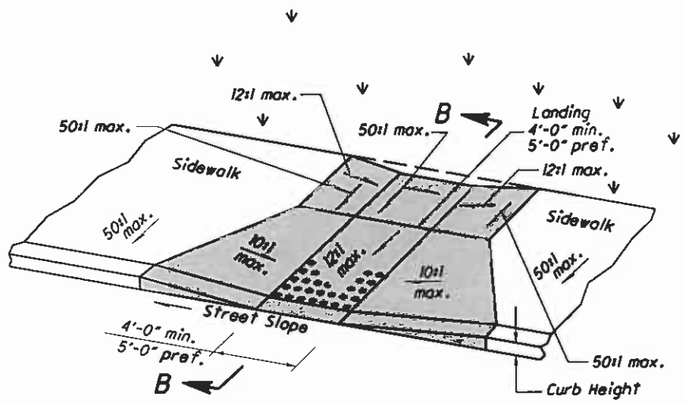

Type C1 (Combined with flared sides)

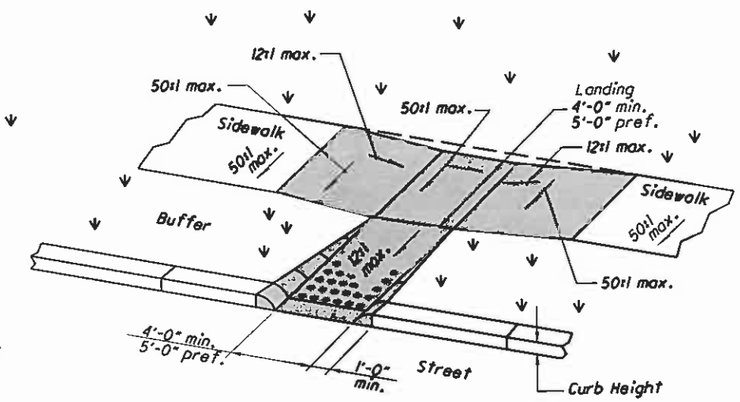

Type C2 (Combined with returned curb)

COMBINED CURB RAMP DETAILS

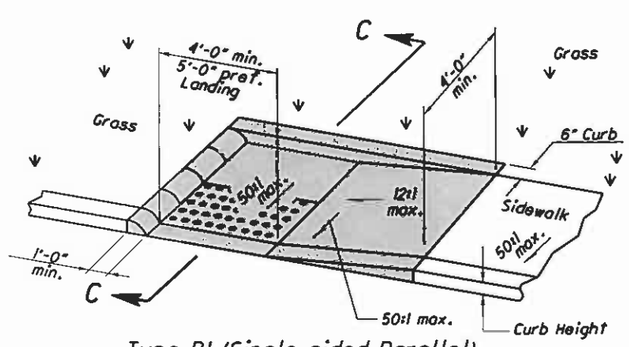

Type B1 (Single sided Parallel)

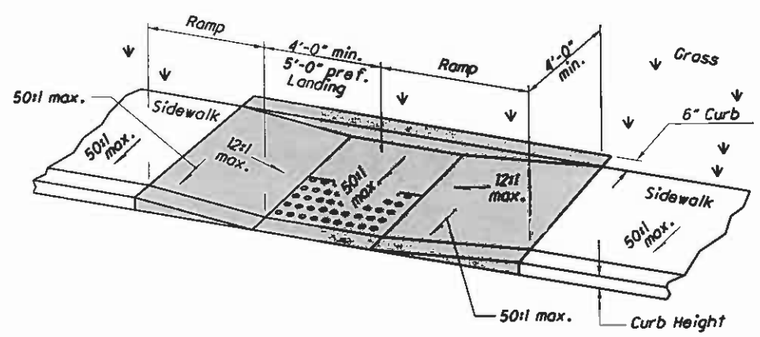

Type B2 (Double sided Parallel)

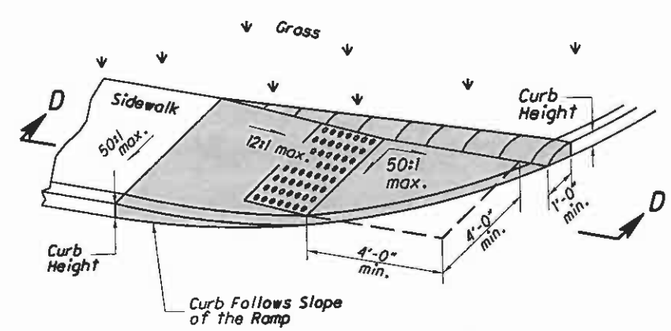

Type B3 (Single sided Parallel)

PARALLEL CURB RAMP DETAILS

NOTES

The running slope of the ramp is preferred to be 12:1 or flatter. In existing sidewalks, where the maximum ramp slope is not feasible due to site constraints (e.g. utility poles or vaults, right-of-way limits) it may be reduced as follows:

A) 10:1 for a max. rise of 6",
B) 8:1 for a max. rise of 3",
C) 6:1 over a max. run of 2'-0" for historic areas where a flatter slope is not feasible.

To prevent chasing the grade indefinately, the transition from exisiting sidewalk to the shaded curb ramp area is not required to exceed 15 feet in length.

While ramps may be skewed to the crosswalk, the entire lower landing area must fall within the cross walk that the ramp serves and cannot be located in the traveled lane of opposing traffic.

The counter slope of the gutter or street at the foot of a curb ramp, landing, or blended transitions shall be 20:1 ot flatter.

The bottom edge of the ramp shall change planes perpendicular to the landing.

The edge of the curb shall be flush with the edge of the adjacent pavement and gutter and surface slopes that meet grade breaks shall also be flush.

Ramp landings shall be 4' min. x 4' min. with a 50:1 or flatter cross slope and running slope.

See Sheet 3 for Sections.

STATE OF OHIO DEPARTMENT OF TRANSPORTATION
ADMINISTRATOR
10-15-10
DATE

STDS. ENGINEER
M. Bline

OFFICE OF ROADWAY ENGINEERING

STANDARD ROADWAY CONSTRUCTION DRAWING
NEW CURB RAMPS
(with Detectable Warnings)

THIS DRAWING REPLACES BP-7.1 DATED 1-19-07.

SCD NUMBER
BP-7.1

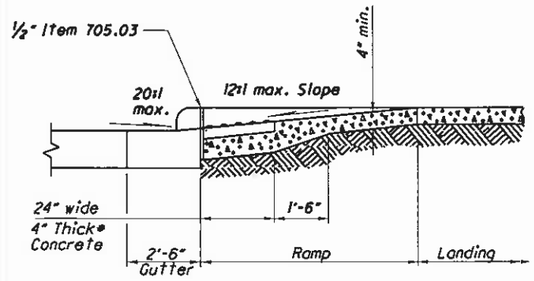

New gutter shown.

SECTION A-A NORMAL DETAIL

See Sheet 2.

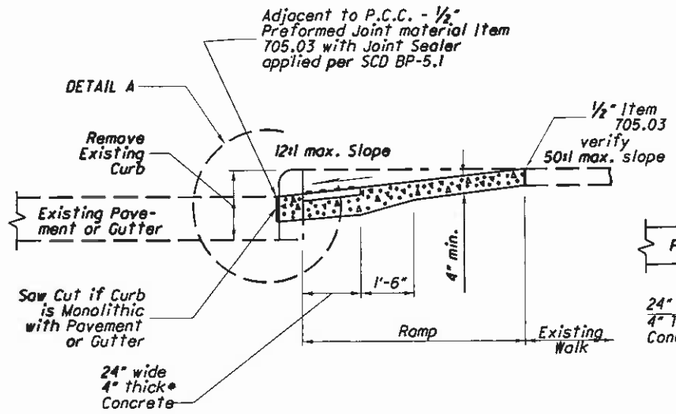

SECTION A-A EXISTING WALK DETAIL

See Sheet 2.

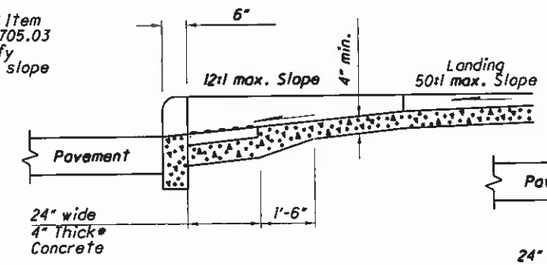

SECTION B-B

See Sheet 2.

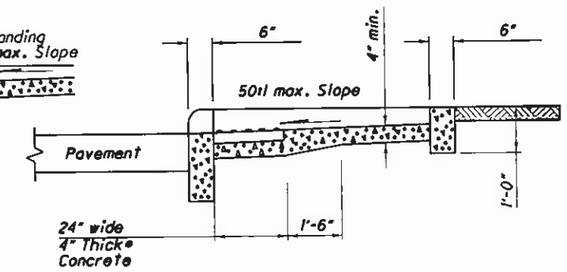

SECTION C-C

See Sheet 2.

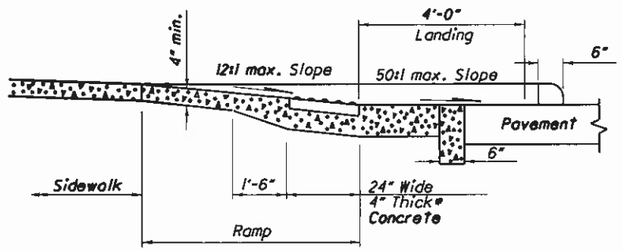

SECTION D-D

See Sheet 2.

*Where possible, pour ramp area integral with the curb, otherwise use 6" thick walk.

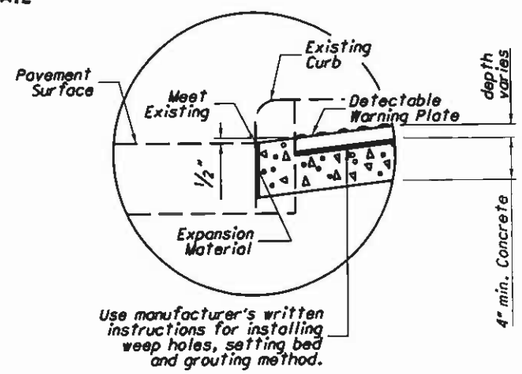

DETAIL A

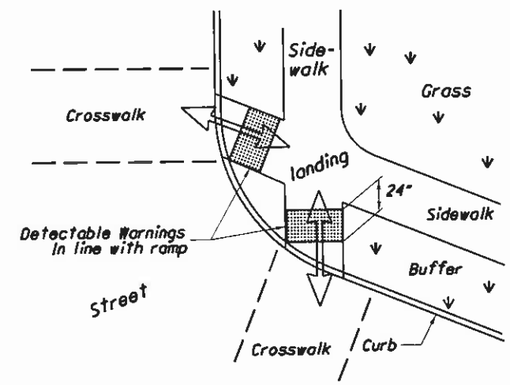

DETECTABLE WARNING ALIGNMENT

DETECTABLE WARNINGS NOTES

GENERAL: Detectable Warnings are a distinctive surface pattern of truncated domes which are detectable by cane or underfoot to alert people with vision impairments of their approach to streets and hazardous drop-offs.

PLACEMENT: Detectable warnings are to be installed at any location where pedestrians might cross paths with vehicular traffic lanes, such as the base of curb ramps or at blended curbs. A 24" strip of domes is to be installed for the full width of the ramp or walk. Typical street corner placement locations are shown on Sheet 1.

The depth of concrete underneath detectable warning products shall be a minimum of 4". See DETAIL A.

ALIGNMENT: Truncated domes should be aligned with the primary direction of the ramp as shown on the DETECTABLE WARNING ALIGNMENT Detail. Normally the detectable warnings should be flush with the back of the curb, but in skewed conditions at least one corner of the 24" strip should be adjacent to the back of curb. For non-standard layouts, detectable warning materials may have to be mitered and placed segmentally.

PRODUCTS & COLORS: Color of the detectable warnings should contrast with surrounding concrete walk and ramp. Black is not an acceptable color. Approved products and guidance on color may be found on the Office of Roadway Engineering Service's Detectable Warnings Approved List. Install products as per manufacturer's printed instructions.

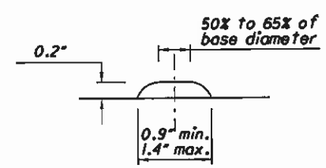

HEIGHT AND DIAMETER

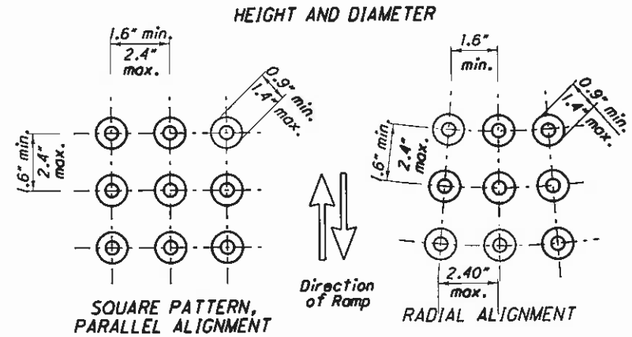

SQUARE PATTERN, PARALLEL ALIGNMENT

RADIAL ALIGNMENT

TRUNCATED DOMES DETAILS

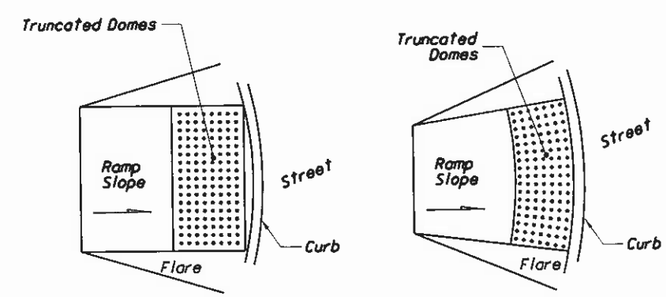

DOME ALIGNMENT ON RADIUSED CURB

STATE OF OHIO DEPARTMENT OF TRANSPORTATION

10-15-10 DATE

ADMINISTRATOR

STDS. ENGINEER W. Bline

OFFICE OF ROADWAY ENGINEERING

STANDARD ROADWAY CONSTRUCTION DRAWING

NEW CURB RAMPS (with Detectable Warnings)

THIS DRAWING REPLACES BP-7.1 DATED 1-19-07.

SCD NUMBER BP-7.1

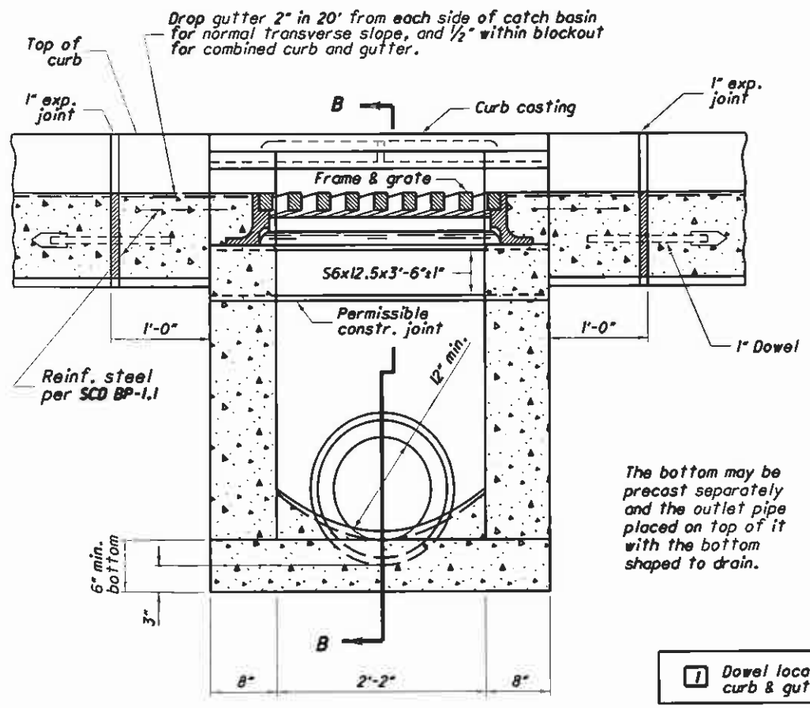

SECTION A-A

The bottom may be precast separately and the outlet pipe placed on top of it with the bottom shaped to drain.

1 Dowel location for curb & gutter

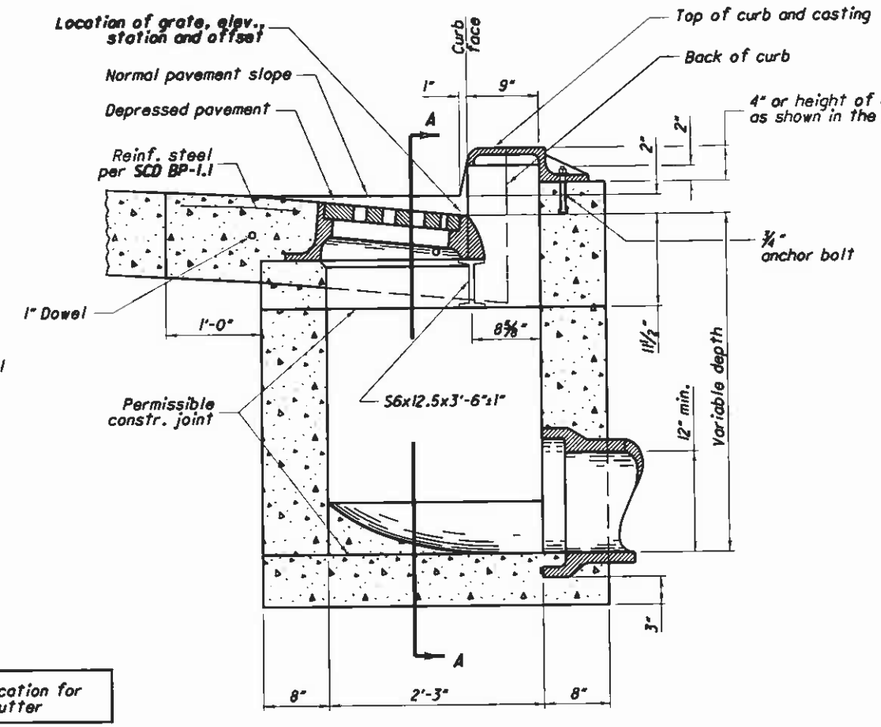

SECTION B-B
WITH CURB
(12" DEPRESSION)

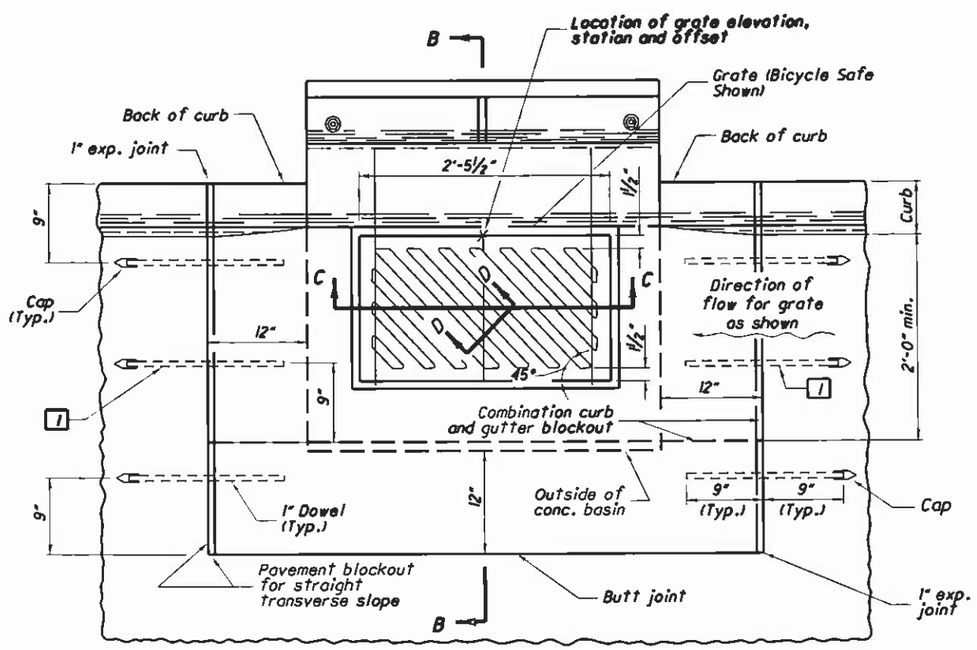

PLAN OF CATCH BASIN AND PAVEMENT JOINTS
(For SECTIONS C-C and D-D, see Sht. 2/2)

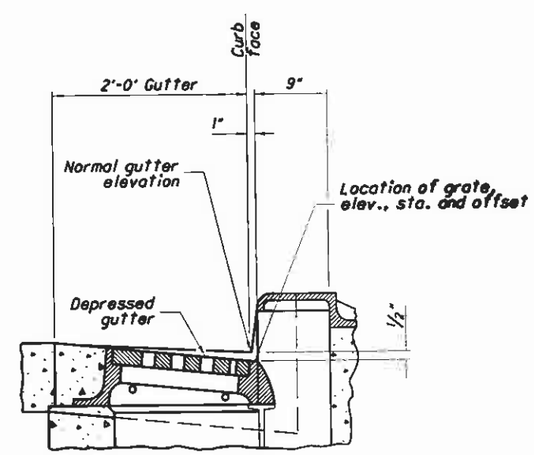

SECTION B-B
WITH CURB & GUTTER
(½" DEPRESSION)

NOTES

GRATE: Provide Grate "V" unless the plans specifically require the diagonal grate. If the diagonal grate is specified, place it so that the diagonal bars direct drainage flow toward the curb. (See Sht. 2/2.)

CASTINGS: Provide a design essentially the same and equally as strong as the one shown. Minimum weight:

Curb Casting . . . . . 170 lbs.
Standard Grate . . . . 127 lbs.
Frame . . . . . 320 lbs.
Grate "V" . . . . . 105 lbs.

Lighter weight frames and grates that meet the requirements of CMS 711.14 may also be provided. Provide grate openings and dimensions as shown here unless otherwise shown in the plans.

Cast the following text into the top of the curb casting:

"DUMP NO WASTE" and **"DRAINS TO WATERWAY"**

Print text in bold, capital letters at least ¾" high. See example on Plan (Sht. 2/2). "WATERWAY" may be substituted with "STREAM", "RIVER", "LAKE", etc. Actual placement and logo may vary per manufacturer.

BEARING AREAS: Fit and finish the frame and grate to provide a firm and even seat. No projections are permitted on bearing areas of either casting, and the grate must seat in its frame without rocking.

WALLS: When used in place of concrete, construct brick side walls with 8" nominal thickness.

PRECAST CONSTRUCTION: Permitted, except for the apron. Meet CMS 706.13 concrete requirements. Provide precast walls at least 6" thick with sufficient reinforcing to permit shipping and placement without damage. Reduce the wall thickness from the outside.

MINIMUM DEPTH: The minimum depth is per the cover requirements for that pipe type.

OPENINGS: Obtain the Engineer's approval for any pipe openings greater than 4" from the outside of the pipe to the structure. Fill all voids per CMS 604.

DOWELS: Furnish four 1"x18" dowels for concrete pavement or gutter blockout. See **SCD BP-2.2** for dowel details.

BLOCKOUT: Pave blockouts with Class C concrete in PCC pavement or gutter. Blockouts are paid for as a part of the pavement or gutter with no deduction in pavement, curb or gutter quantities because of the castings. Cast a Class C concrete apron the size of the 2'-0" gutter in place in asphalt pavement (no dowels required) with the cost included in the catch basin bid price. No deduction is made in curb quantities.

PAYMENT: All materials and labor, including excavation and backfilling, are paid for under **Item 604 - Catch Basin, No. 3A.**

CATCH BASIN No. 3A

STATE OF OHIO DEPARTMENT OF TRANSPORTATION
STATE HYDRAULIC ENGINEER

REVISIONS
7-20-01
7-19-02
7-15-05
7-20-12

ROADWAY HYDRAULIC ENGINEER
Matt Cozzoli

OFFICE OF HYDRAULIC ENGINEERING

STANDARD HYDRAULIC CONSTRUCTION DRAWING
CATCH BASIN No. 3A

SCD NUMBER
CB-2.2

1/2

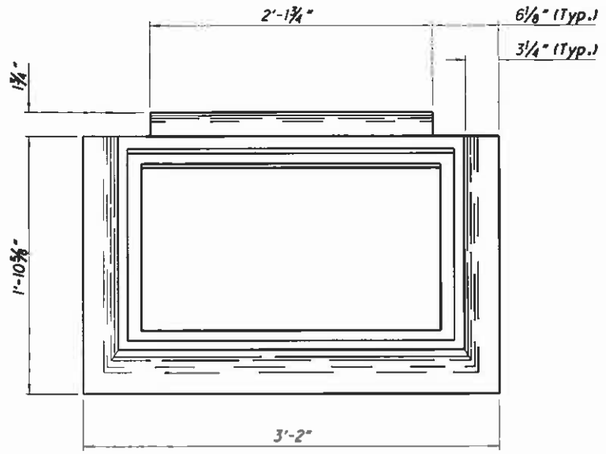

PLAN

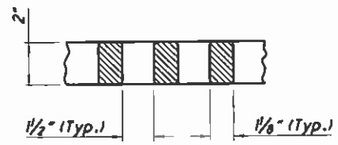

SECTION D-D
(See Sht. 1/2.)

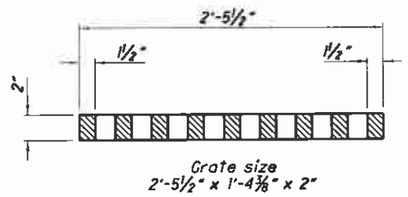

SECTION C-C
DIAGONAL GRATE
(See Sht. 1/2)

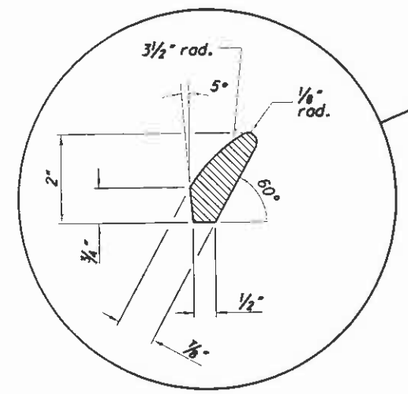

⅛" radii
all bar edges

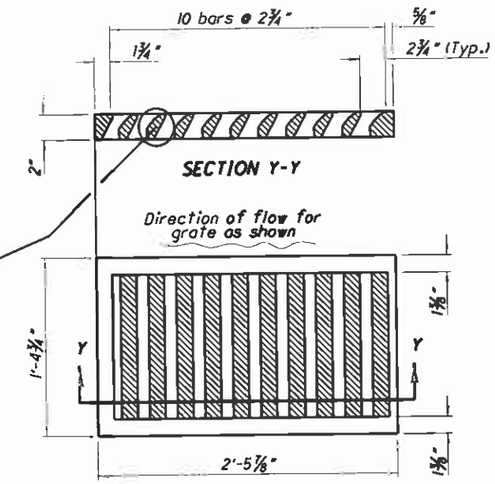

PLAN
GRATE "V"

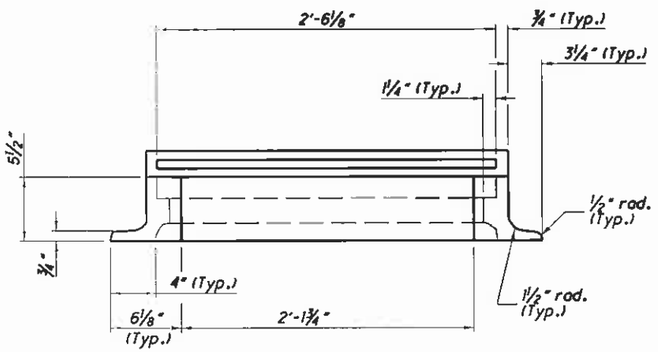

BACK VIEW

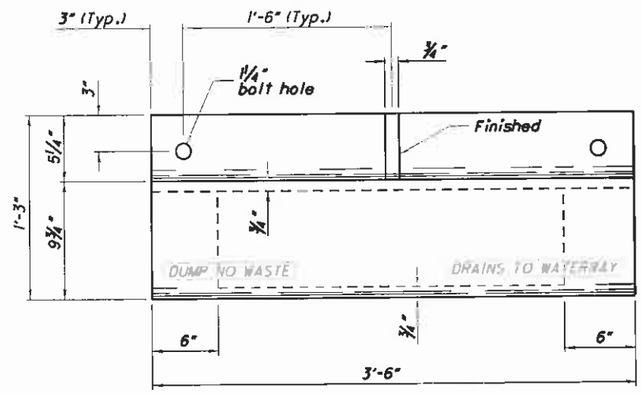

PLAN

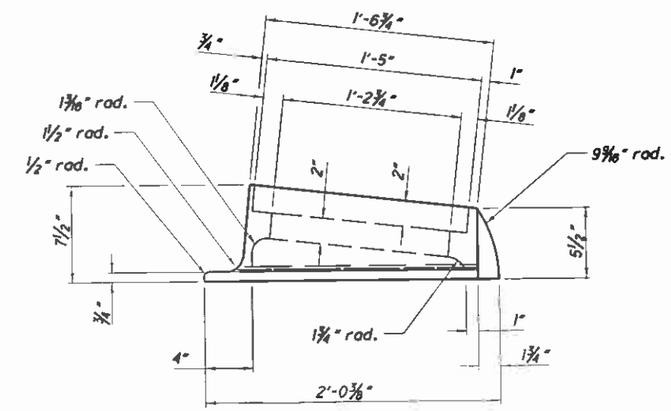

END VIEW FRAME

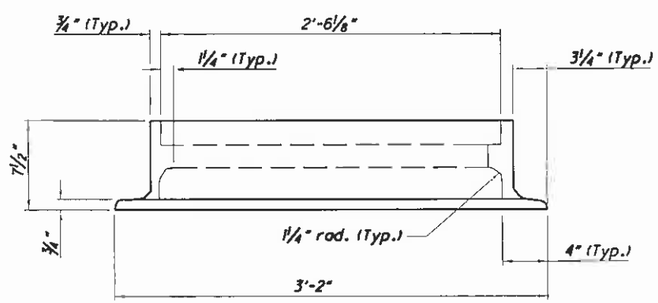

FRAME
FRONT VIEW

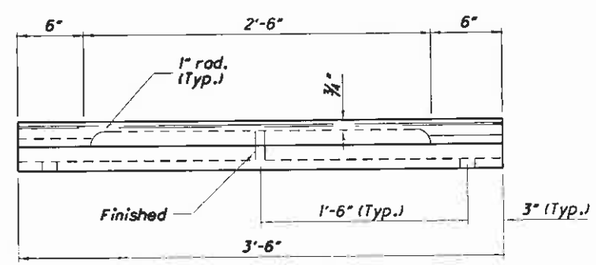

FRONT VIEW
CURB CASTING

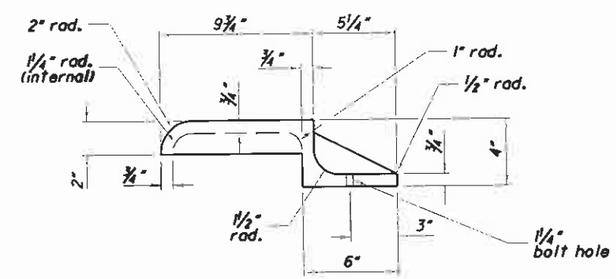

END VIEW
CURB CASTING

STATE OF OHIO DEPARTMENT OF TRANSPORTATION
STATE HYDRAULIC ENGINEER

REVISIONS
7-20-01
7-19-02
7-15-05
7-20-12

ROADWAY HYDRAULIC ENGINEER
Matt Cozzoli

OFFICE OF HYDRAULIC ENGINEERING

STANDARD HYDRAULIC CONSTRUCTION DRAWING
CATCH BASIN No. 3A

SCD NUMBER
CB-2.2

2/2

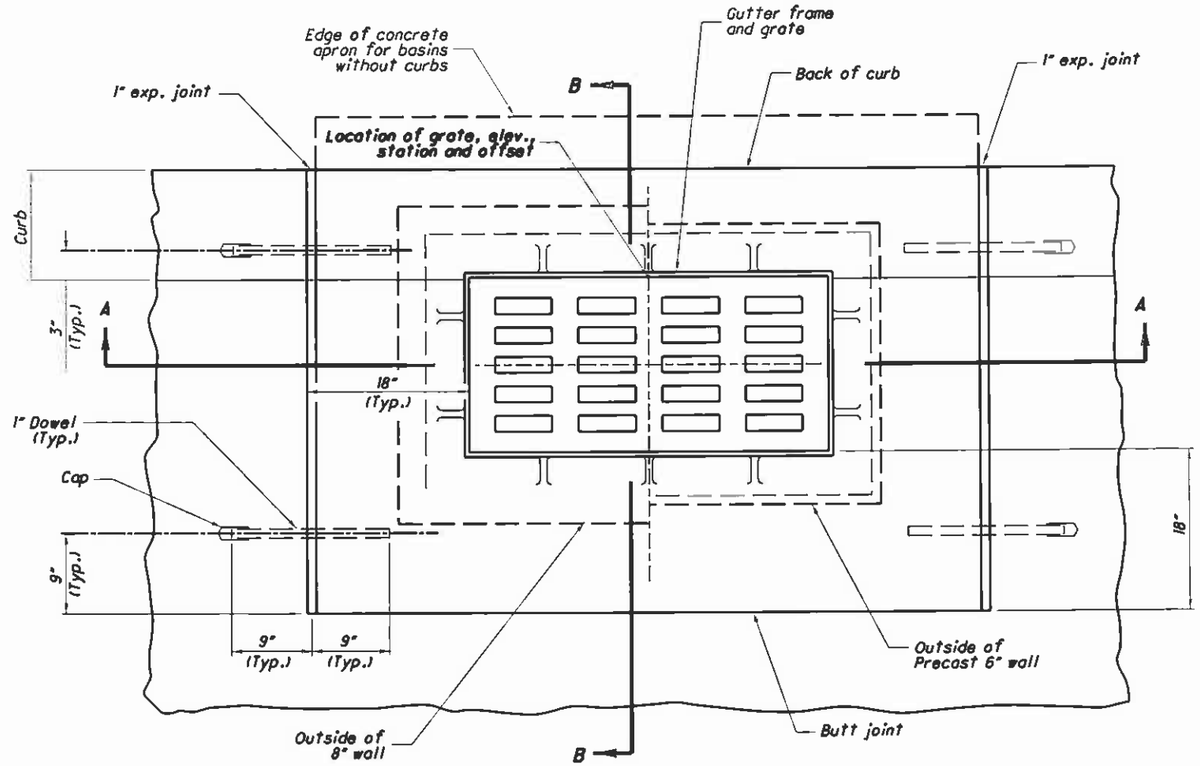

See Sht. 2/2 for Sections

PLAN OF CATCH BASINS AND PAVEMENT JOINTS

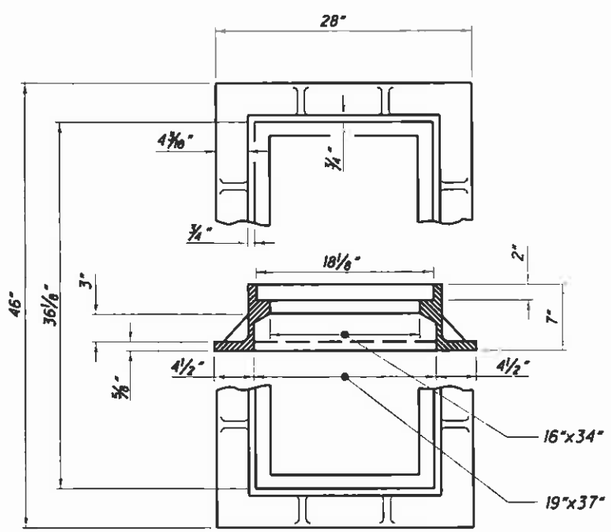

FRAME

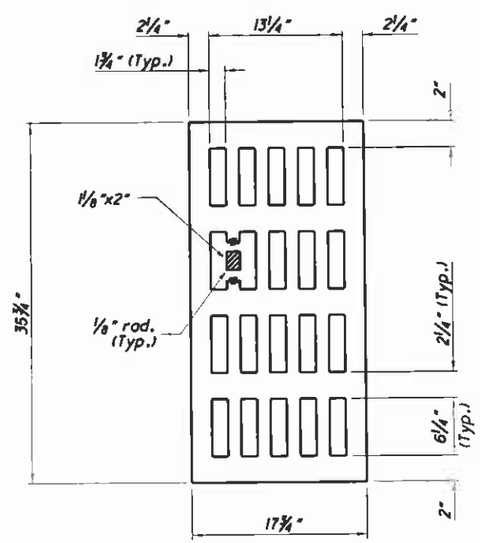

GRATE

NOTES

GRATE AND FRAME: Provide a design essentially the same and equally as strong as the one shown (see construction information table), or meet the requirements of CMS 711.14. Provide grate openings and dimensions as shown here unless otherwise shown in the plans.

Cast the following text into the top of the grate:

"DUMP NO WASTE" and "DRAINS TO WATERWAY"

Print text in bold, capital letters at least 1/2" high. "WATERWAY" may be substituted with "STREAM", "RIVER", "LAKE", etc. Actual placement and logo may vary per manufacturer.

BEARING AREAS: Fit and finish frame and grate to provide a firm and even seat for all portions of the grate in the frame. No projections are permitted on bearing areas of either casting, and the grate must seat in its frame without rocking. Fit, match and mark frame and grate before delivery to the project.

WALLS: Construct brick or cast-in-place walls with a nominal thickness of 8". Provide precast walls at least 6" thick with sufficient reinforcing to permit shipping and handling without damage.

CONCRETE: Use Class C for cast-in-place concrete. Meet the requirements of CMS 706.13 for precast concrete and mark with the catch basin number. Reduce the wall thickness from the outside.

MINIMUM DEPTH: The minimum depth is the outside diameter (O.D.) of the outlet pipe plus 15".

OPENINGS: Obtain the Engineer's approval for any pipe openings greater than 4" from the outside of the pipe to the structure. Fill all voids per CMS 604.

DOWELS: Furnish four 1"x18" dowels for pavement and curb. See **SCD BP-2.2** for dowel detail.

BLOCKOUT APRONS: Use Class C concrete. Cost of apron is not included in catch basin price when located in PCC pavement, and no deduction in normal pavement quantities is made because of blockout. When adjacent paving is asphalt, omit the dowels, and the cost of the concrete apron is included in the catch basin bid price. Cost of curb, if any, is included in CMS 609. For basins without curb, the grate elevation is 1" below the normal pavement slope measured at the center of the grate.

PAYMENT: All materials and labor, including excavation and backfilling, are paid for under **Item 604 - Catch Basin, No. 6.**

CONSTRUCTION INFORMATION
Minimum weight of grate, 210 lbs.
Minimum weight of frame, 265 lbs.

STATE OF OHIO DEPARTMENT OF TRANSPORTATION

STATE HYDRAULIC ENGINEER

REVISIONS
7-20-01
7-19-02
7-15-05
7-20-12

ROADWAY HYDRAULIC ENGINEER
Matt Cozzoli

OFFICE OF HYDRAULIC ENGINEERING

STANDARD HYDRAULIC CONSTRUCTION DRAWING

CATCH BASIN No. 6

SCD NUMBER
CB-2.3

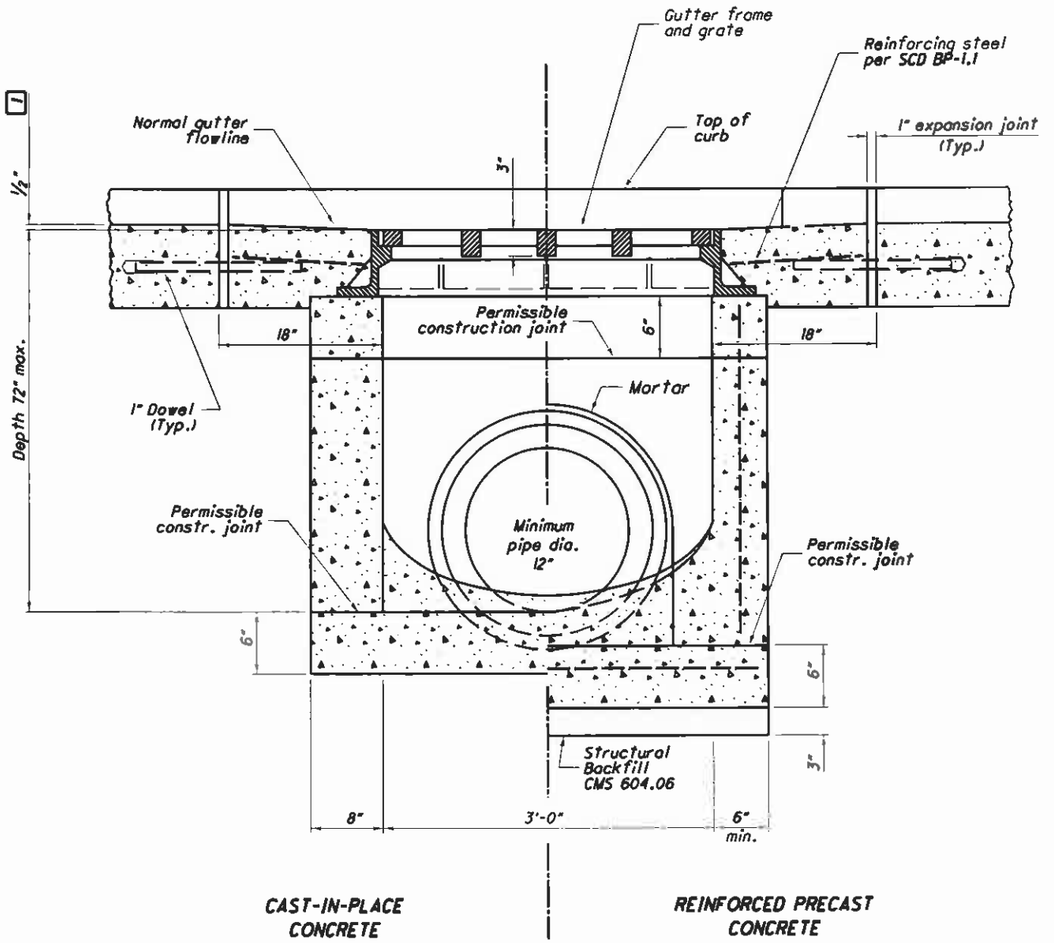

SECTION A-A

(See Sht. 1/2.)

1 Unless otherwise shown on plans

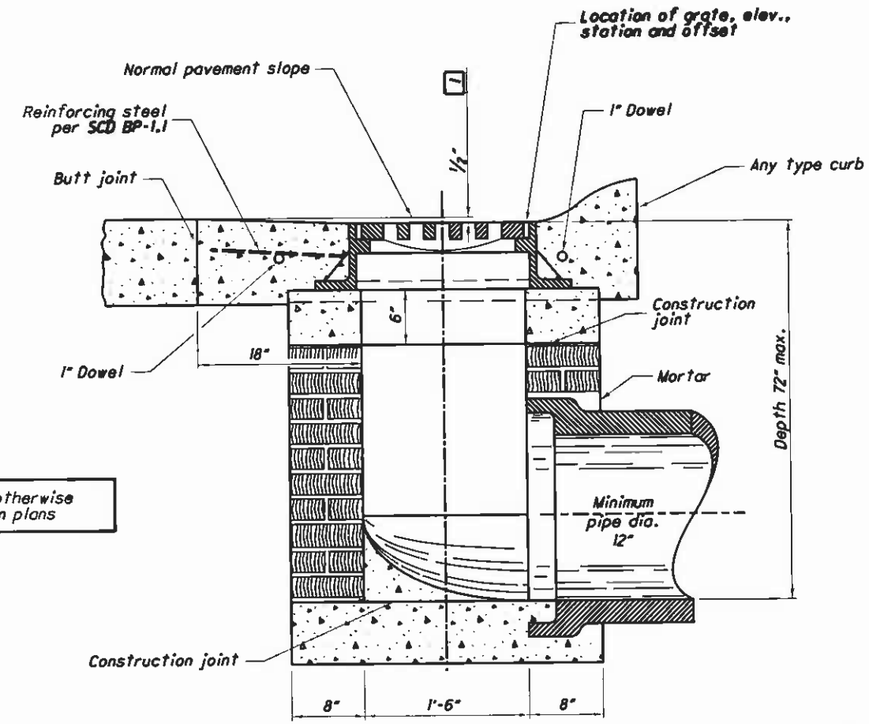

SHOWN WITH BRICK WALLS

SECTION B-B

(See Sht. 1/2.)

CATCH BASIN No. 6

STATE OF OHIO DEPARTMENT OF TRANSPORTATION

STATE HYDRAULIC ENGINEER

REVISIONS
7-20-01
7-19-02
7-15-05
7-20-12

ROADWAY HYDRAULIC ENGINEER
Matt Cozzoli

OFFICE OF HYDRAULIC ENGINEERING

STANDARD HYDRAULIC CONSTRUCTION DRAWING

CATCH BASIN No. 6

SCD NUMBER
CB-2.3

2/2

CONSTRUCTION METHODS

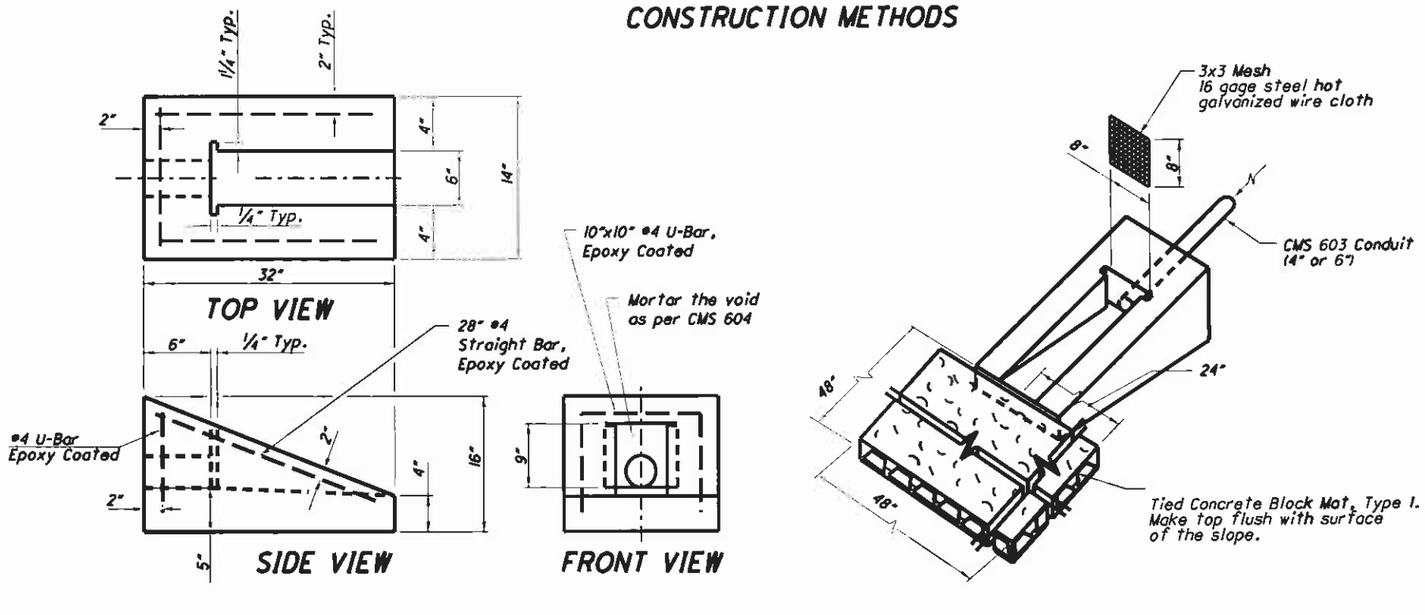

PRECAST REINFORCED CONCRETE OUTLET

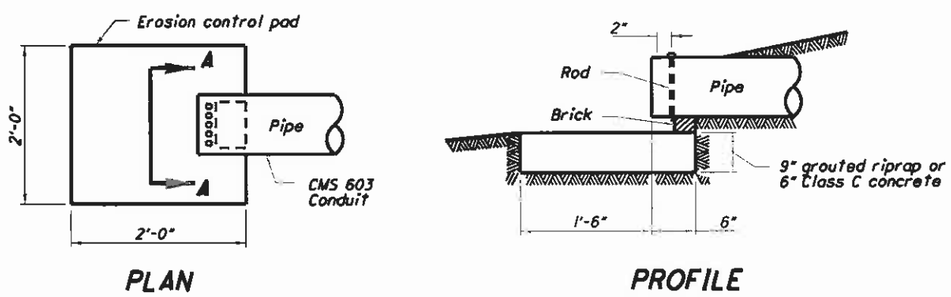

EROSION CONTROL PAD AND ANIMAL GUARD FOR OUTLET PIPE

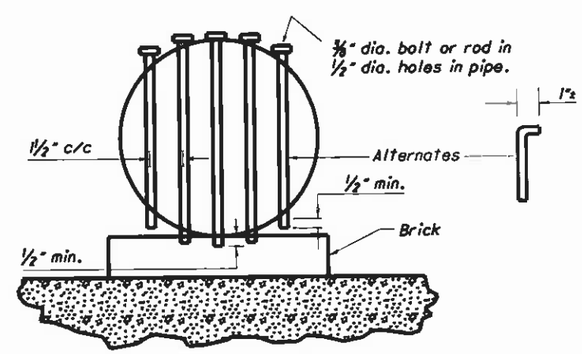

SECTION A-A

CONDUIT SIZE	4"	6"	8"	10"	12"	15"	18"
No. of Bolts	2	3	5	6	7	9	11

NOTES

EROSION CONTROL PAD AND ANIMAL GUARDS: Provide these items at the outlet end of all farm drains except where they outlet into a drainage structure.

Furnish galvanized steel bolts or rods for the animal guard per CMS 711.02. Instead of drilling or punching the ½" diameter holes into the pipe, a metal collar meeting all of the above requirements may be clamped onto the pipe if approved by the Engineer.

PAYMENT: Erosion control pads and animal guards are included in the unit price bid for **Item 603 - .. Inch Conduit, Type .. .**

PRECAST REINFORCED CONCRETE OUTLET: Provide a concrete outlet that meets CMS 604 requirements.

PAYMENT: The precast reinforced concrete outlet and wire mesh are paid at the contract unit price bid for **Item 604 - Precast Reinforced Concrete Outlet.**

Tied Concrete Block Mat, Type I is paid at the contract unit price bid for **Item 601 - Tied Concrete Block Mat, Type I.**

STATE OF OHIO DEPARTMENT OF TRANSPORTATION

STATE HYDRAULIC ENGINEER

REVISIONS
7-20-01
7-19-02
7-18-03
1-21-05
10-21-05
4-21-06
1-21-11
7-20-12

ROADWAY HYDRAULIC ENGINEER
Matt Cozzoli

OFFICE OF HYDRAULIC ENGINEERING

STANDARD HYDRAULIC CONSTRUCTION DRAWING

OUTLETS, DRAINS AND SEWERS

SCD NUMBER
DM-1.1

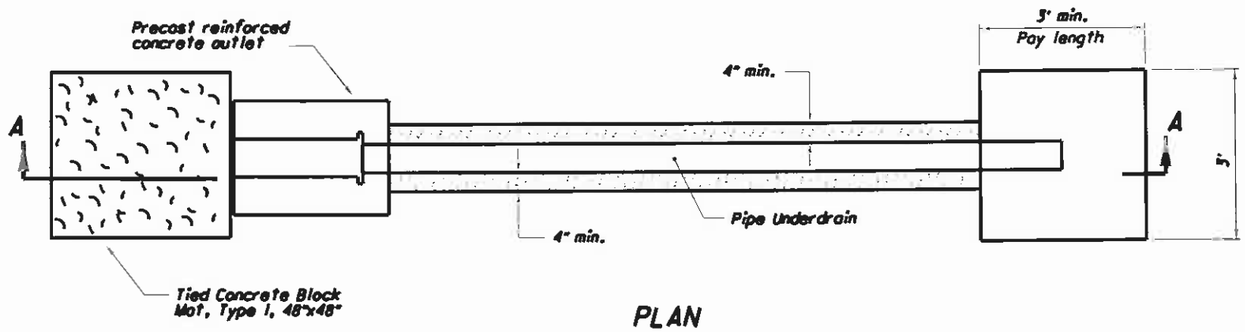

PLAN

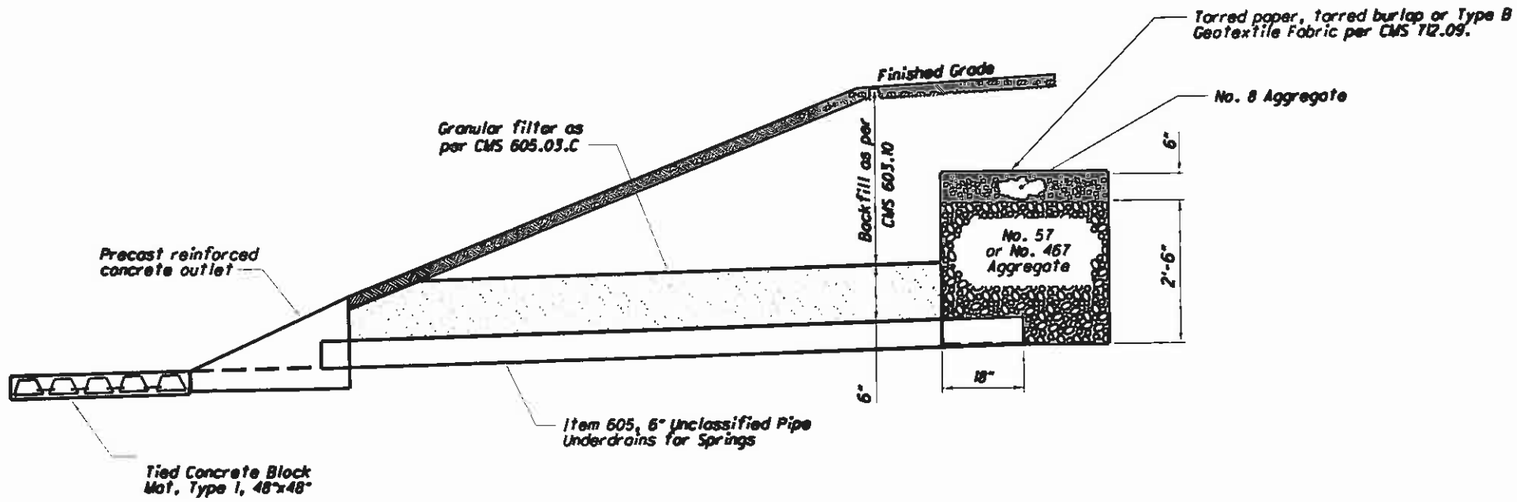

SECTION A-A
SPRING DRAIN DETAIL

NOTES

SPRING DRAIN: Aggregates, tarred paper, tarred burlap, or geotextile fabric backfill and necessary excavation for spring drains are included for payment in the unit price bid per Foot for **Item 605, Aggregate Drains for Springs.**

PAYMENT: The pipe is included in the unit price bid per Foot for **Item 605 - 6" Unclassified Pipe Underdrains for Springs.**

PRECAST REINFORCED CONCRETE OUTLET: Provide a concrete outlet that meets CMS 604 requirements.

PAYMENT: The precast reinforced concrete outlet and wire mesh is paid at the contract unit price bid for **Item 604 - Precast Reinforced Concrete Outlet.**

Tied Concrete Block Mat, Type I is paid at the contract unit price bid for **Item 601 - Tied Concrete Block Mat, Type I.**

STATE OF OHIO DEPARTMENT OF TRANSPORTATION

STATE HYDRAULIC ENGINEER

REVISIONS
7-20-01
7-19.02
7-18-03
1-21-05
10-21-05
4-21-06
1-21-11
7-20-12

ROADWAY HYDRAULIC ENGINEER
Matt Cozzoli

OFFICE OF HYDRAULIC ENGINEERING

STANDARD HYDRAULIC CONSTRUCTION DRAWING

OUTLETS, DRAINS AND SEWERS

SCD NUMBER
DM-1.1

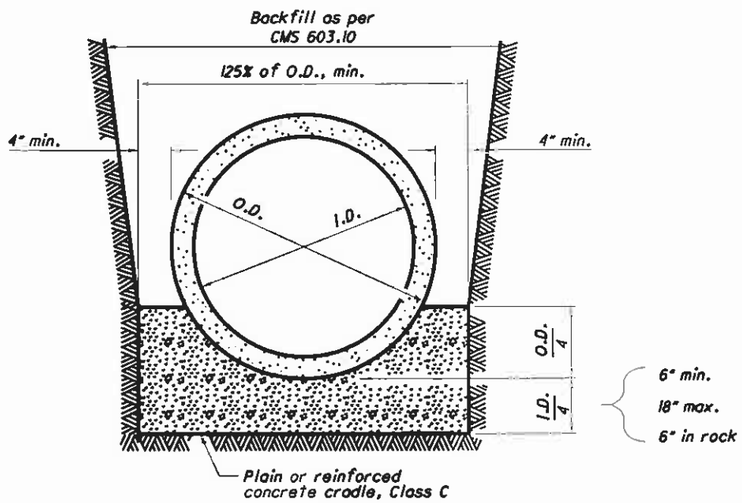

CONCRETE CRADLE

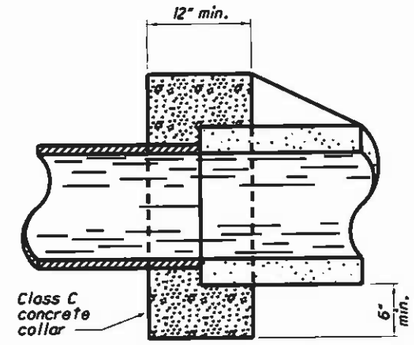

MASONRY COLLAR

NOTES

MASONRY COLLARS: Provide a masonry collar where plans require that a pipe extension be joined to the end of an existing pipe with a butt joint. The cost is included in the unit price bid for the new conduit.

RIPRAP CUTOFF WALL:
The cost of the cutoff wall is included in the unit price bid for Item 601 Riprap Using 6" Reinforced Concrete Slab.

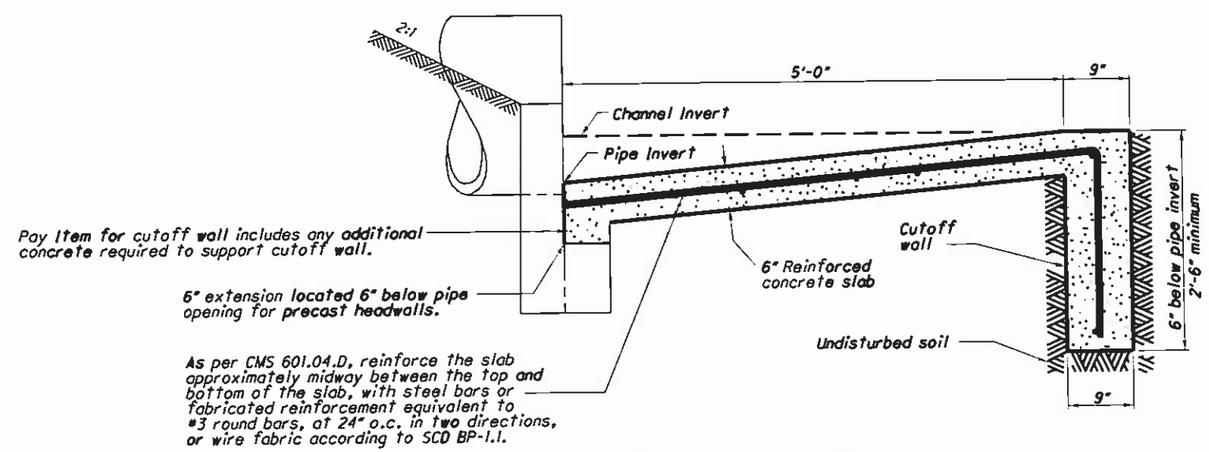

RIPRAP CUTOFF WALL

STATE OF OHIO DEPARTMENT OF TRANSPORTATION

STATE HYDRAULIC ENGINEER

REVISIONS
7-20-01
7-19-02
7-18-03
1-21-05
10-21-05
4-21-06
1-21-11
7-20-12

ROADWAY HYDRAULIC ENGINEER
Matt Cozzoli

OFFICE OF HYDRAULIC ENGINEERING

STANDARD HYDRAULIC CONSTRUCTION DRAWING

OUTLETS, DRAINS AND SEWERS

SCD NUMBER
DM-1.1

3/3

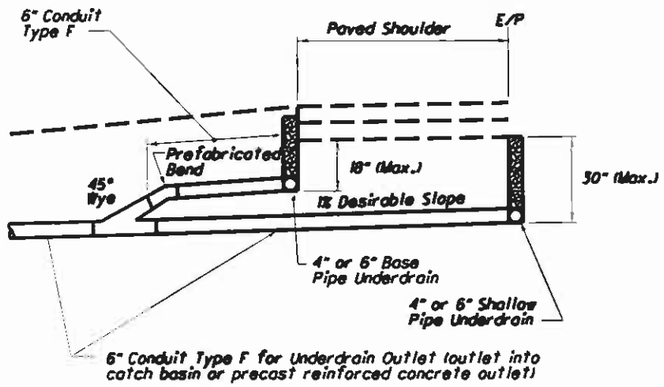

RIGID OR FLEXIBLE PAVEMENT
PROFILE

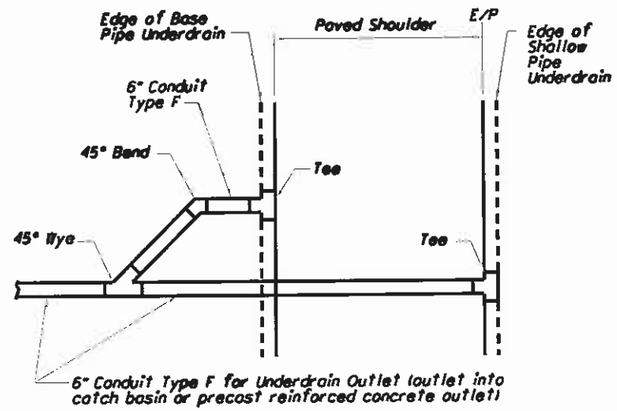

RIGID OR FLEXIBLE PAVEMENT
PLAN

NOTES

DESCRIPTION: This item consists of furnishing and installing either a pipe underdrain system or a prefabricated edge underdrain system according to the specifications and with the details on the plans or as directed by the Engineer.

MATERIALS: Provide either a pipe underdrain system or a prefabricated edge underdrain system that meets the requirements of CMS 605.

BASIS OF PAYMENT FOR PIPE UNDERDRAIN SYSTEM: Work completed, accepted and measured under this item is paid for at the contract unit price bid for Item 605 - ....." Base Pipe Underdrain, Item 605 - ....." Shallow Pipe Underdrain, or Item 605 ....." Deep Pipe Underdrain. The price is full compensation for excavation and backfill; for furnishing materials, including materials for outlet fittings; and for all labor, tools, equipment and incidentals necessary to complete the work.

BASIS OF PAYMENT FOR PREFABRICATED EDGE DRAIN SYSTEM: Work completed, accepted and measured under this item is paid for at the contract unit price bid for Item 605 - ....." Prefabricated Edge Underdrains. The price is full compensation for excavation and backfill; for removing and disposing of all surplus excavation according to CMS 105.16 and 105.17; for furnishing materials, including materials for splices, outlet fittings, and Item 301; and for all labor, tools, equipment and incidentals necessary to complete the work associated with the installation of prefabricated edge underdrains.

The cost of the 4" Conduit, Type F, and pipe bends and branches needed to connect the existing and proposed underdrains is included with the cost of the 6" Conduit, Type F, for Underdrain Outlets.

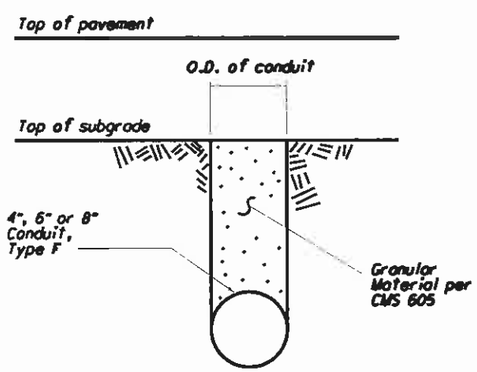

603 4", 6", or 8"
Conduit, Type F
Under Pavement or Base

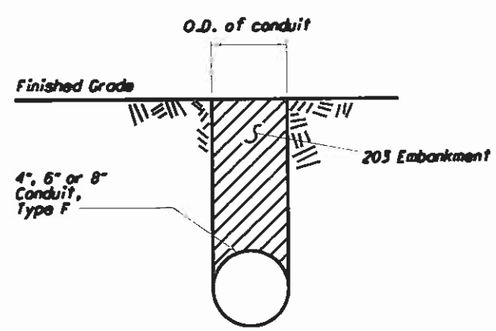

603 4", 6", or 8"
Conduit, Type F
Outside Pavement or Base

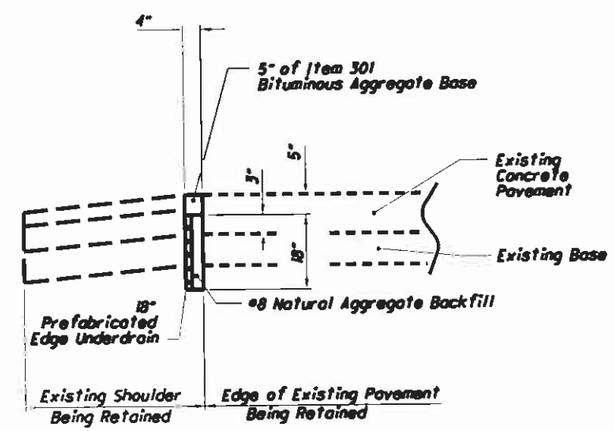

PREFABRICATED EDGE DRAIN SYSTEM

STATE OF OHIO DEPARTMENT OF TRANSPORTATION
STATE HYDRAULIC ENGINEER

REVISIONS
7-20-01
7-19-02
1-21-05
10-21-05
7-20-12

ROADWAY HYDRAULIC ENGINEER
Matt Cozzoli

OFFICE OF HYDRAULIC ENGINEERING

STANDARD HYDRAULIC CONSTRUCTION DRAWING
PIPE UNDERDRAINS

SCD NUMBER
DM-1.2

1/1

EXCAVATION METHODS

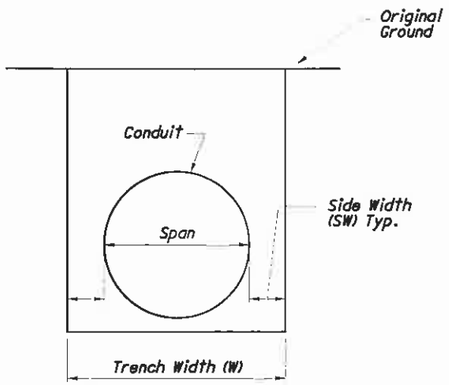

METHOD A-CUT

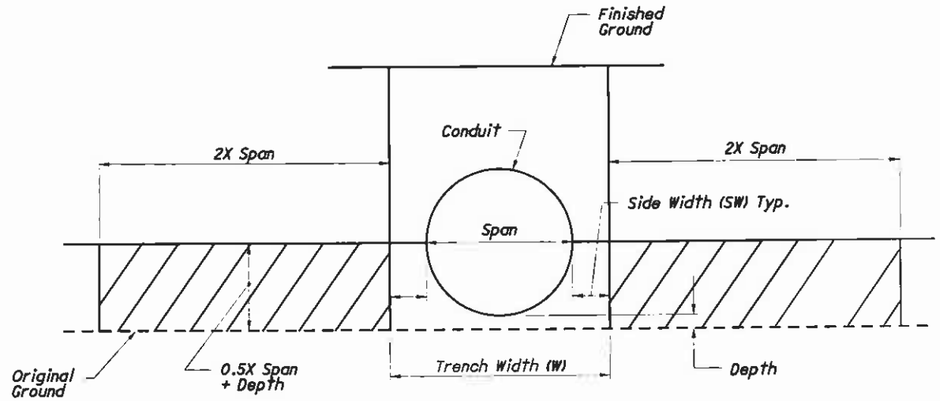

METHOD B-FILL

Minimum Constructed Embankment

TRENCH DIMENSIONS

MATERIAL	SW	WIDTH (W)
Long Span	2'	Span+2(2)
Concrete	0.165 X Span	1.33 X Span
Metal & Plastic	0.5 + 0.125 X Span	1.25 X Span + 1

NOTES

- Use Structural Backfill Type 1, 2, or 3 per CMS 603.
- Use Embankment per CMS 603.
- Conduit Span is the horizontal distance from outside wall to outside wall or outside corrugation measured at the widest point of the conduit.
- Conduit Rise is the vertical distance from outside wall to outside wall or outside corrugation measured at the middle of the conduit.
- All dimensions are in feet unless specified.

BEDDING TYPES

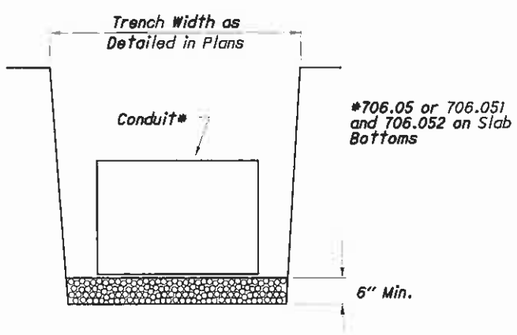

TYPE 1 BEDDING

Structural Backfill

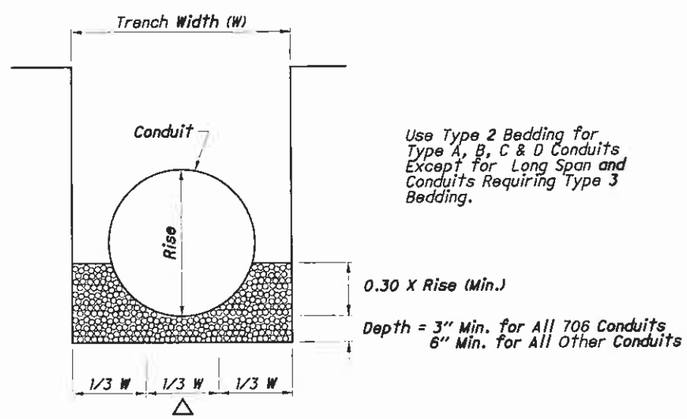

TYPE 2 BEDDING

△ The Middle 1/3 W Under the Conduit Shall Be Uncompacted

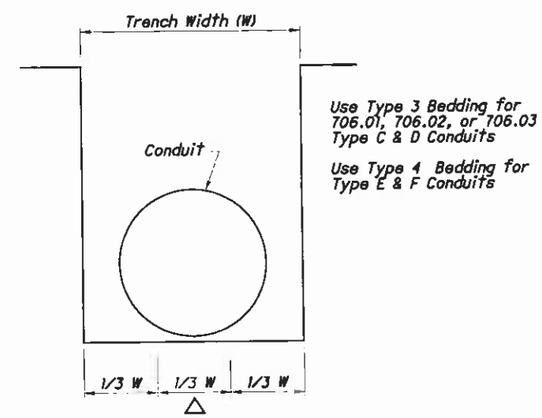

TYPE 3 & 4 BEDDING

△ Scarify and Loosen the Middle 1/3 W Under the Conduit for Type 3 Bedding

STATE OF OHIO DEPARTMENT OF TRANSPORTATION
STATE HYDRAULIC ENGINEER

REVISED
7-19-02
1-21-05
4-21-06
7-15-11

REGIONAL HYDRAULIC ENGINEER R. Humphreys

ALL METRIC DIMENSIONS (IN BRACKETS [ ]) ARE IN MILLIMETERS UNLESS OTHERWISE NOTED.

OFFICE OF HYDRAULIC ENGINEERING

STANDARD HYDRAULIC CONSTRUCTION DRAWING
CONDUIT INSTALLATION

SCC NUMBER
DM-1.4

1 / 2

BACKFILL CONDITIONS

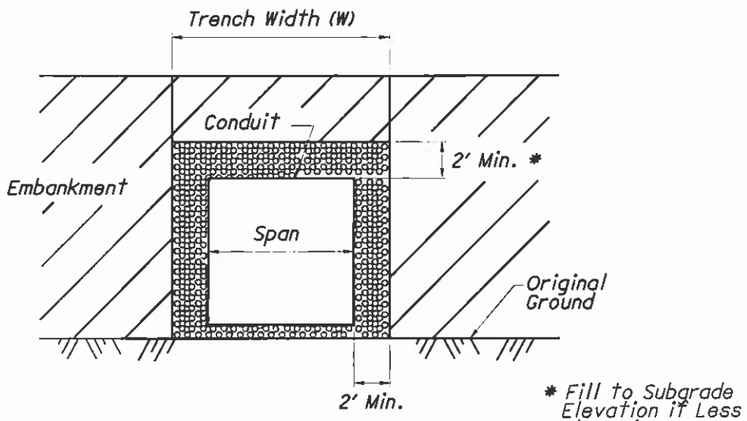

* Fill to Subgrade Elevation if Less Than Min.

LONG SPAN-FILL

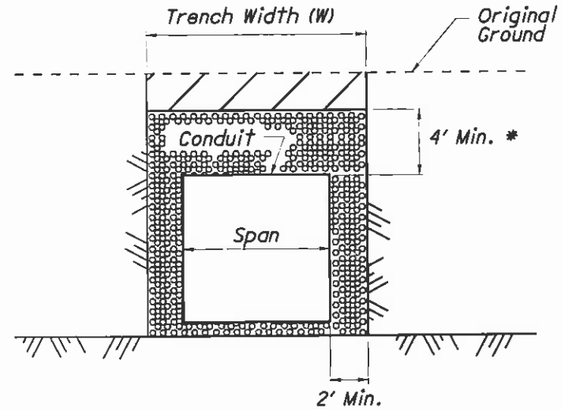

LONG SPAN-CUT

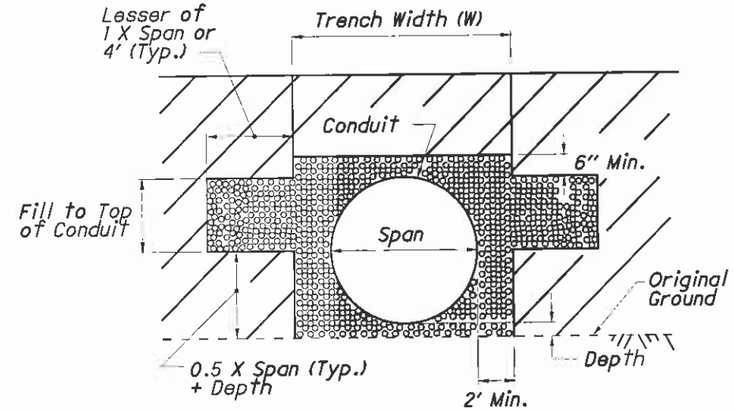

** PLASTIC CONDUIT, TYPE C & D -FILL

** For All Other Type C & D Conduits Place & Compact Backfill on Top of Bedding.

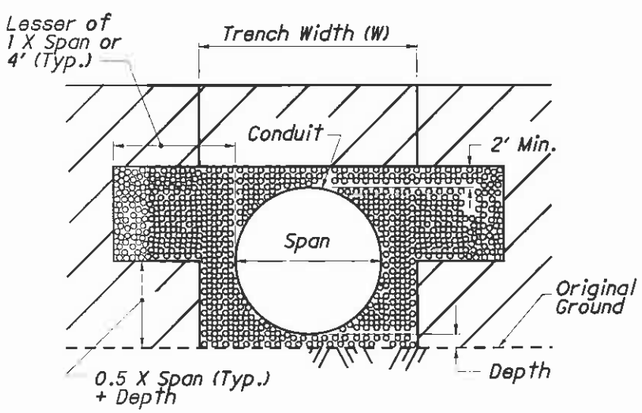

CONDUIT, TYPE A & B-FILL

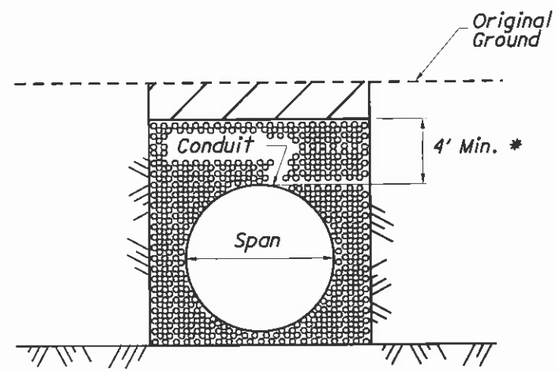

CONDUIT TYPE A & B-CUT

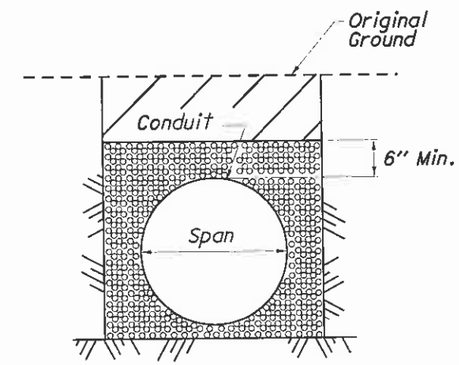

** PLASTIC CONDUIT, TYPE C-CUT

- Construction Embankment

- Structural Backfill

NOTES

Backfill Conduits per CMS 603.

STATE OF OHIO DEPARTMENT OF TRANSPORTATION
STATE HYDRAULIC ENGINEER

REVISIONS
7-19-02
1-21-05
4-21-06
7-15-11

FEDERAL HYDRAULIC ENGINEER
R. Humphreys

ALL METRIC DIMENSIONS (IN BRACKETS [ ]) ARE IN MILLIMETERS UNLESS OTHERWISE NOTED.

OFFICE OF HYDRAULIC ENGINEERING

STANDARD HYDRAULIC CONSTRUCTION DRAWING
CONDUIT INSTALLATION

STD. DWG. NO.
DM-1.4

2 / 2

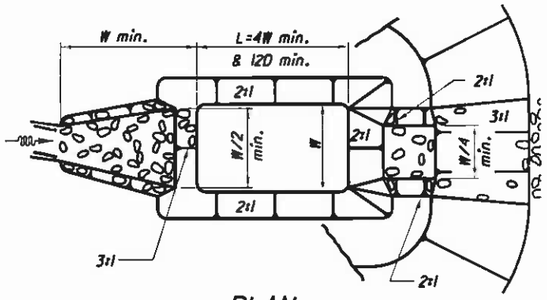

PLAN

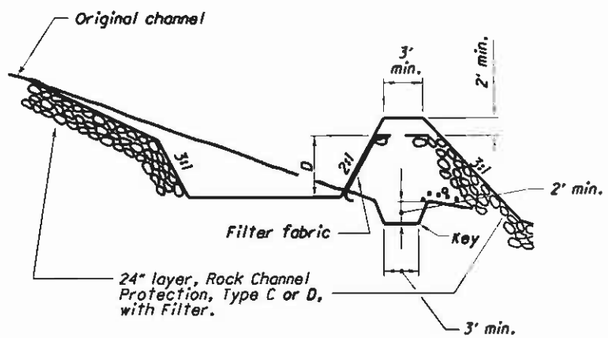

PROFILE

SEDIMENT DAM

(Drainage Area of Less than 5 Acres)

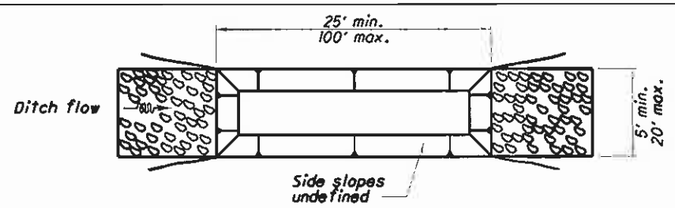

PLAN

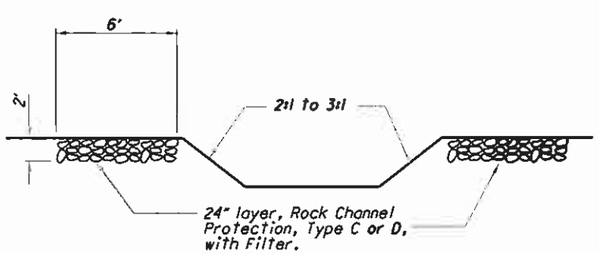

PROFILE

SEDIMENT BASIN

(Drainage Area of Less than 5 Acres)

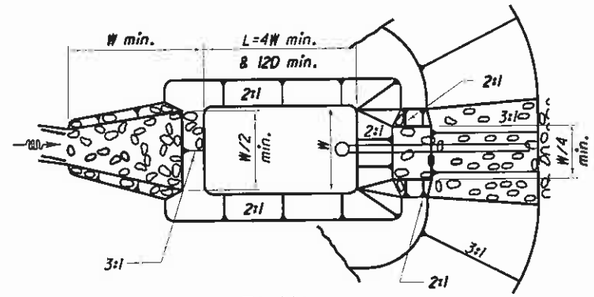

PLAN

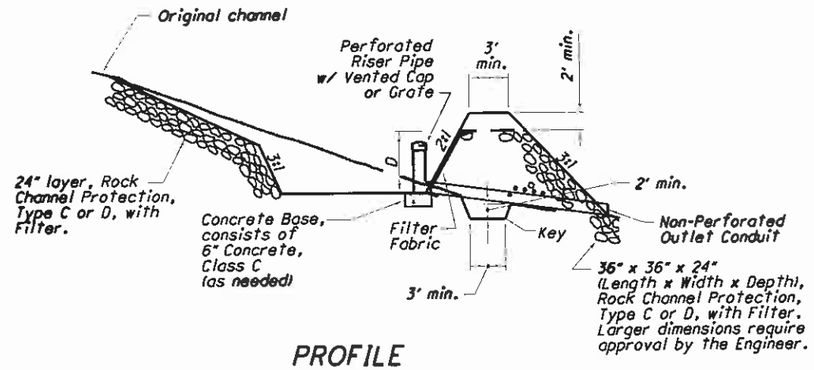

PROFILE

SEDIMENT DAM

(Drainage Area of 5 Acres or More)

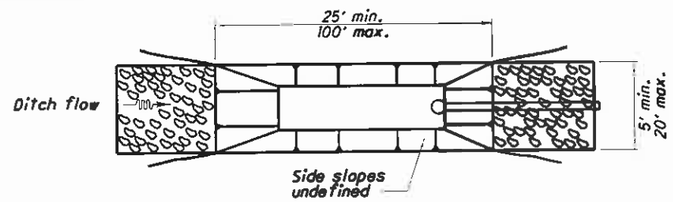

PLAN

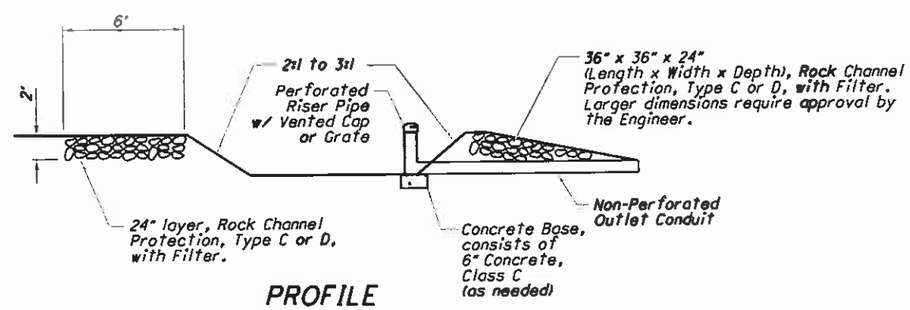

PROFILE

SEDIMENT BASIN

(Drainage Area of 5 Acres or More)

NOTES

MATERIAL:

Furnish materials conforming to Item 203, Embankment, and Item 601, Rock Channel Protection, Type C or D with filter. Furnish construction fence consisting of 4'-0" high plastic fence with 6' long metal fence posts.

CONSTRUCTION:

Construct the Basin and Dams as detailed. Construct the construction fence in urban areas or in high pedestrian traffic areas. Construct the fence to completely surround the sediment basin or dam. Place the fence post on 8' centers, 2' deep. Securely attach the plastic construction fence to the fence post.

PAYMENT:

The Department will pay for accepted quantities at the prices shown in Appendix F of Supplemental Specification 832 (SS832) for the following items:

- Sediment Basins and Dams
- Rock Channel Protection, Type C or D, with Filter

All items shown on this Standard Construction Drawing that are required for construction that are not specifically identified in SS832 Appendix F are considered incidental.

RISER PIPE:

Use schedule 40 Polyvinyl Chloride Conduit.

STATE OF OHIO DEPARTMENT OF TRANSPORTATION

STATE HYDRAULIC ENGINEER

REVISIONS
4-29-99
7-19-02
11-26-08
4-17-09
7-20-12

ROADWAY HYDRAULIC ENGINEER
Matt Cozzoli

OFFICE OF HYDRAULIC ENGINEERING

STANDARD HYDRAULIC CONSTRUCTION DRAWING

SEDIMENT AND EROSION CONTROLS

SCD NUMBER
DM-4.3

DIKES AND SLOPE DRAINS

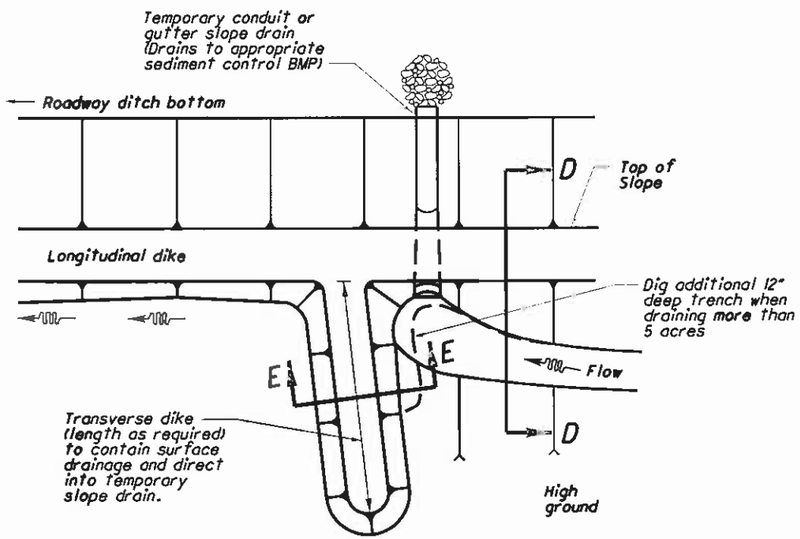

PLAN VIEW

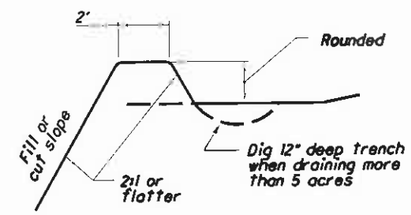

SECTION D-D

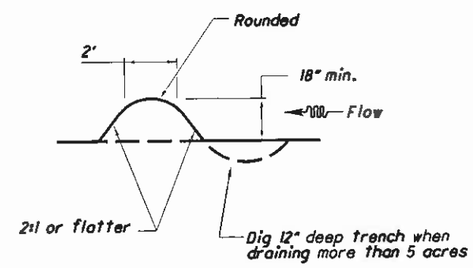

SECTION E-E

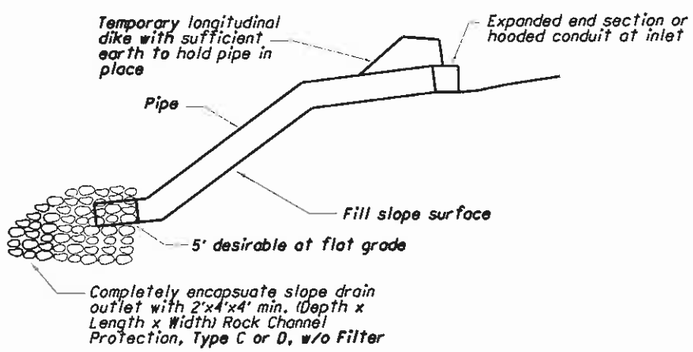

CONDUIT SLOPE DRAIN

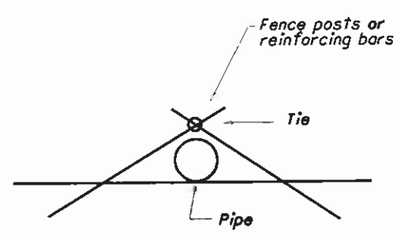

TIE-DOWN SLOPE DRAIN

NOTES

MATERIAL:

Furnish materials conforming to Item 203, Embankment, and Item 601, Rock Channel Protection, Type C or D, without filter.

Furnish the following for the slope drains: corrugated steel pipe, corrugated or smooth plastic pipe, reinforcing bars or fence posts.

CONSTRUCTION:

Construct as detailed. Compact the dike to 85% of Standard Proctor.

Use reinforcing bars or fence posts to tie down the slope drains and to keep the pipe from moving.

Ensure that the water entering the slope drain inlet does not erode or degrade the dike section containing the temporary conduit.

PAYMENT:

The Department will pay for accepted quantities at the prices shown in Appendix F of Supplemental Specification 832 (SS832) for the following items:

- Slope Drains
- Dikes
- Rock Channel Protection, Type C or D, Without Filter

All items shown on this Standard Construction Drawing that are required for construction that are not specifically identified in SS832 Appendix F are considered incidental.

TEMPORARY SLOPE DRAINS RECOMMENDED SIZES

AREA in acres	PIPE SIZES	
	Smooth	Corrugated
0-4	6"	6"
4-8	8"	12"
8-12	10"	15"

STATE OF OHIO DEPARTMENT OF TRANSPORTATION

STATE HYDRAULIC ENGINEER

REVISIONS
4-29-99
7-19-02
11-26-08
4-17-09
7-20-12

ROADWAY HYDRAULIC ENGINEER
Matt Cozzoli

OFFICE OF HYDRAULIC ENGINEERING

STANDARD HYDRAULIC CONSTRUCTION DRAWING

SEDIMENT AND EROSION CONTROLS

SCD NUMBER
DM-4.3

2 / 2

DITCH CHECKS

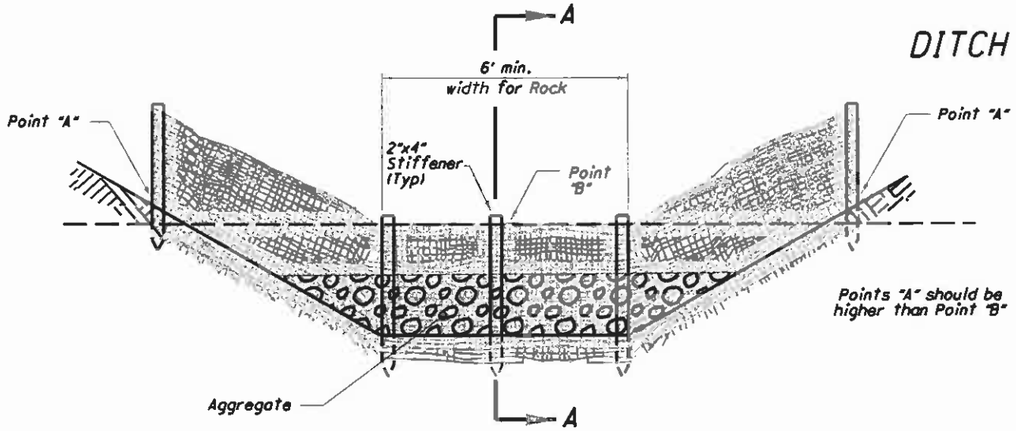

CROSS-SECTIONAL VIEW OF FLAT BOTTOM DITCH

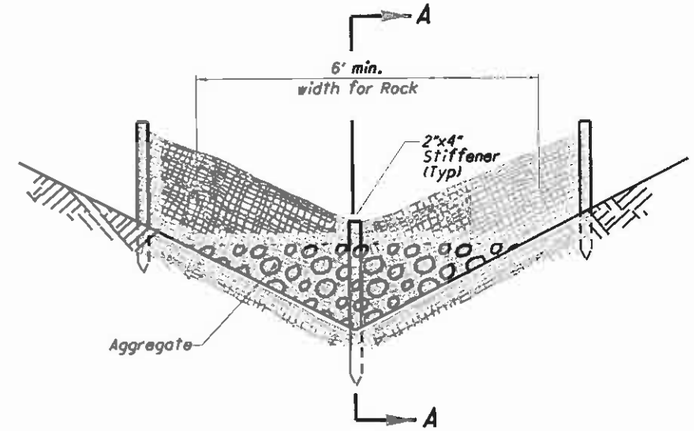

CROSS-SECTIONAL VIEW OF "V" DITCH

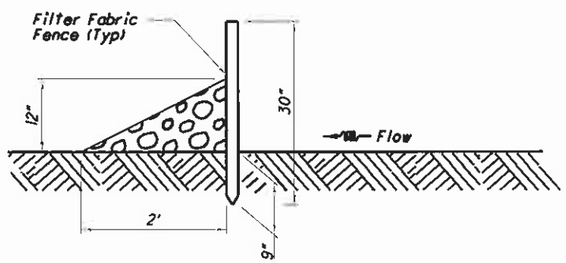

PROFILE VIEW OF FLAT BOTTOM AND V DITCH
SECTION A-A

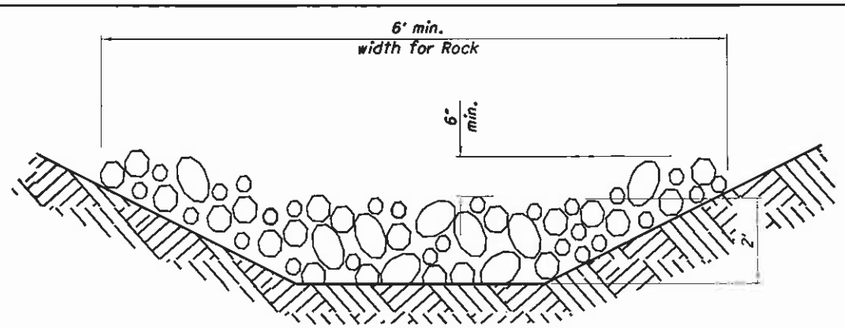

Minimum dimensions: 2' high x 6' wide x 3' long

CROSS-SECTIONAL VIEW
ROCK CHECK

NOTES

FILTER FABRIC DITCH CHECKS:

MATERIALS:
Furnish filter fabric ditch checks consisting of the following materials:

1. 30" wide filter fabric with sound wood supports with maximum on-center spacing of 10'. Use filter fabric conforming to 712.09, Type C.
2. A vertically driven 2"x4" stiffener stake in the center of the ditch.
3. Aggregate conforming to one of the following gradations: No. 1 through No. 4 on Table 703.01-1.

When using straw bales, furnish 30" long 2"x2" wooden stakes, reinforcing bars or fence posts to stake straw bales in place.

CONSTRUCTION:
Trench the filter fabric fence as detailed for PERIMETER FILTER FABRIC FENCE (see Sheet 2). Place a vertical 2"x4" stiffener stake in the center of the ditch with the top level to the top of the fence and at least 6" below the bottom of the ditch. Excavate for aggregate and place the aggregate on the downstream side of the ditch check.

If the Engineer determines that rock should not be used for the filter fabric ditch checks, replace aggregate with straw bales configured with minimal gaps between bales. Tightly place each bale adjacent to one another. Entrench 2" to 3" into the ground prior to staking. Firmly stake each bale with at least two stakes.

PAYMENT:

The Department will pay for accepted quantities at the prices shown in Appendix F of Supplemental Specification 832 (SS832) for the following items:

- Filter Fabric Ditch Check

All items shown on this Standard Construction Drawing that are required for construction that are not specifically identified in SS832 Appendix F are considered incidental.

NOTES

ROCK CHECKS:

MATERIALS:
Furnish material conforming to Item 601 - Rock Channel Protection, Type C or D, Without Filter.

CONSTRUCTION:
If the Engineer determines that rock should not be used for the rock checks, replace rock channel protection with straw bales configured with minimal gaps between bales. Tightly place each bale adjacent to one another. Entrench 2" to 3" into the ground prior to staking. Firmly stake each bale with at least two stakes.

PAYMENT:

The Department will pay for accepted quantities at the prices shown in Appendix F of Supplemental Specification 832 (SS832) for the following items:

- Rock Channel Protection, Type C or D, Without Filter

All items shown on this Standard Construction Drawing that are required for construction that are not specifically identified in SS832 Appendix F are considered incidental.

STATE OF OHIO DEPARTMENT OF TRANSPORTATION
STATE HYDRAULIC ENGINEER

REVISIONS
12-01-08
4-17-09
7-20-12

ROADWAY HYDRAULIC ENGINEER
Matt Cazzoli

OFFICE OF HYDRAULIC ENGINEERING

STANDARD HYDRAULIC CONSTRUCTION DRAWING
CONSTRUCTION EROSION CONTROL

SCD NUMBER
DM-4.4

PERIMETER FILTER FABRIC FENCE

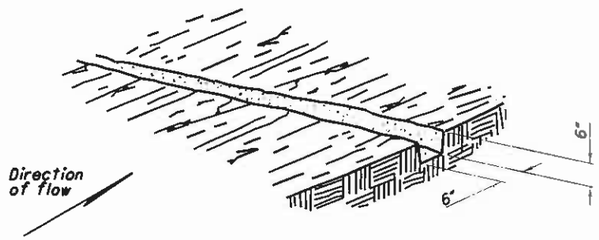

Excavate a 6"x6" trench along the proposed fence line.

STEP 1

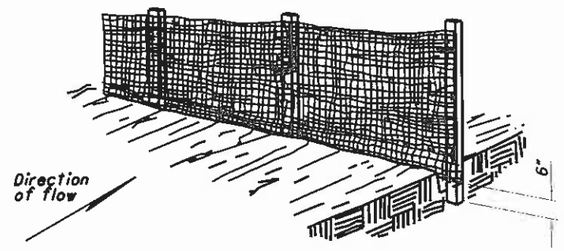

Place fabric and support stakes and extend fabric into the trench.

STEP 2

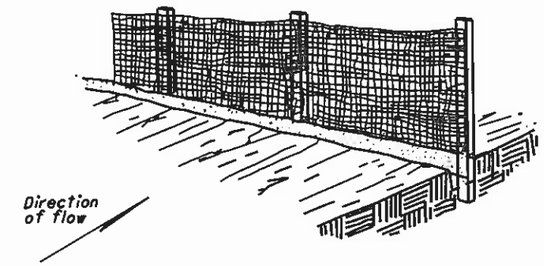

Backfill and compact the excavated soil.

STEP 3

NOTES

MATERIALS:

Furnish 30" wide filter fabric with sound wood supports with maximum on-center spacing of 10'. Use filter fabric conforming to 712.09, Type C.

CONSTRUCTION:

Trench the filter fabric fence as detailed. The contractor may elect to trench the fence detailed on steps 1 through 3 in one plowing operation.

PAYMENT:

The Department will pay for accepted quantities at the prices shown in Appendix F of Supplemental Specification 832 (SS832) for the following items:

- Perimeter Filter Fabric Fence

All items shown on this Standard Construction Drawing that are required for construction that are not specifically identified in SS832 Appendix F are considered incidental.

INLET PROTECTION

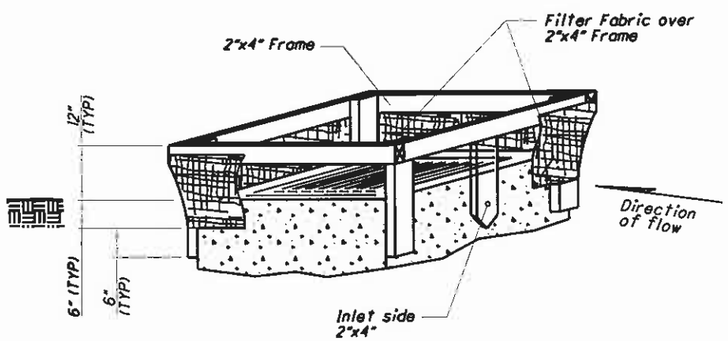

INLET PROTECTION

NOTES

MATERIALS:

Furnish inlet protection consisting of 18" wide filter fabric fence with a securely nailed 2"x4" wood frame with a vertically driven 2"x4" on the inlet, or flow, side of the structure. Use filter fabric conforming to 712.09, Type C.

CONSTRUCTION:

Construct an 18" wide filter fabric fence supported around a storm drain inlet or catch basin with a securely nailed 2"x4" wood frame. Excavate a 6" trench around the inlet, and drive support posts 6" below the excavated trench bottom. Stretch the fabric around the frame. Secure it tightly, ensuring that 6" of fabric is in the trench. Overlap the fabric on one side of the inlet so that the fabric ends are not attached to the same post. Backfill and compact the excavated soil tightly onto the fabric. Place a vertical 2"x4" in the center of the inlet so that the top is at the top of the fence and the bottom is at least 6" below the bottom of the ditch.

PAYMENT:

The Department will pay for accepted quantities at the prices shown in Appendix F of Supplemental Specification 832 (SS832) for the following items:

- Inlet Protection

All items shown on this Standard Construction Drawing that are required for construction that are not specifically identified in SS832 Appendix F are considered incidental.

STATE OF OHIO DEPARTMENT OF TRANSPORTATION

STATE HYDRAULIC ENGINEER

REVISIONS
4-29-02
7-19-02
12-01-08
4-17-09
7-20-12

ROADWAY HYDRAULIC ENGINEER
Matt Cozzoli

OFFICE OF HYDRAULIC ENGINEERING

STANDARD HYDRAULIC CONSTRUCTION DRAWING

CONSTRUCTION EROSION CONTROL

SCD NUMBER
DM-4.4

2/2

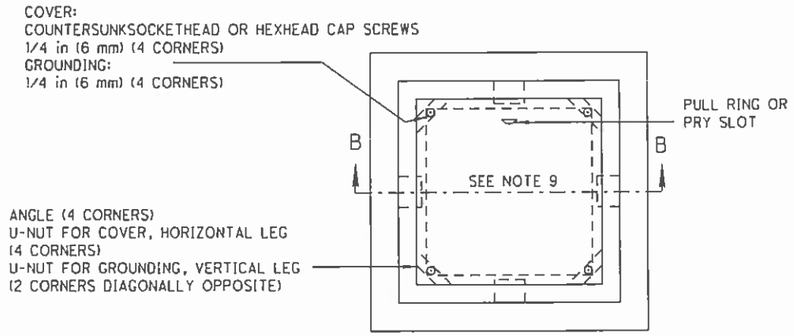

PLAN VIEW

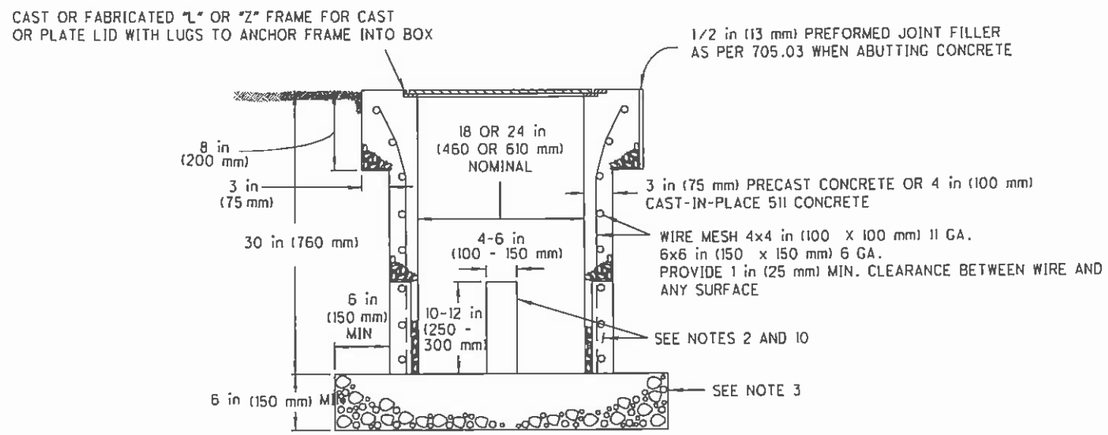

SECTION B-B

PORTLAND CEMENT CONCRETE PULLBOX

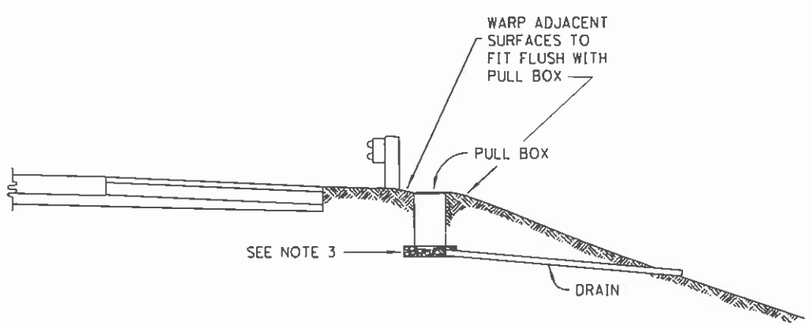

INSTALLATION WITH INDEPENDENT DRAIN

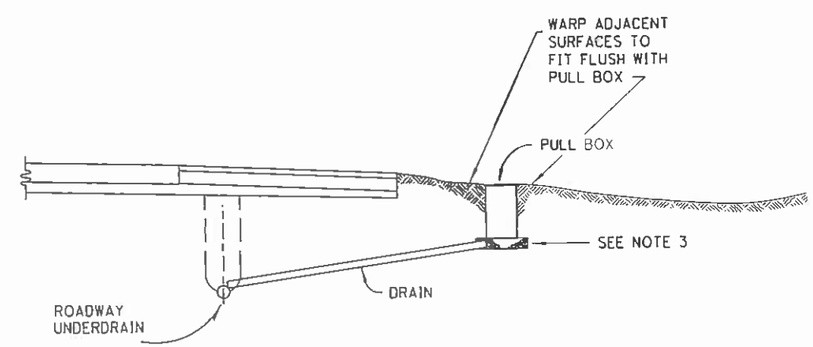

INSTALLATION WITH CONNECTION TO

ROADWAY UNDERDRAIN

NOTES

1. Pull boxes shall conform with 625.11 and 725.07 or 725.08 or 725.06.
2. Conduit openings shall be sealed after conduit installation.
3. Aggregate used for pull boxes shall be No. 7 or 8, at least 6 inch (150 millimeter) deep. Cost for aggregate shall be included with the unit price bid for each pull box.
4. Pull box drains in accordance with 603 shall be installed when specified, or as directed by the Engineer.
5. A durable label reminding of the need to lubricate the threads of the cover hold down screws with grease or anti-seize compound shall be on the inside of the frame or upper wall.
6. See specifications for cover marking requirements.
7. Portland cement concrete pull box covers shall be cast iron with reinforcing ribs and matching frames by Neenah, Josam or Zurn foundries, or approved equal, or covers may be 1/2 inches (13 millimeters) minimum galvanized plate steel.
8. Tapered thickness portland cement concrete pull box walls may be used; however, minimum wall thickness shall be as indicated.
9. Lifting rings or wire pulling rings may be incorporated into precast portland cement concrete pull box walls.
10. Conduit entries for cast-in-place portland cement concrete pull boxes shall be cast as required. Precast portland cement concrete pull boxes may have field core drilled or sawed openings, or may have precast openings or knockouts. Knockouts shall be arranged to avoid compromising the structural integrity of the box.

10-16-09

PULL BOX DETAILS I

OFFICE OF TRAFFIC ENGINEERING

HL-30.11

1/1

BM

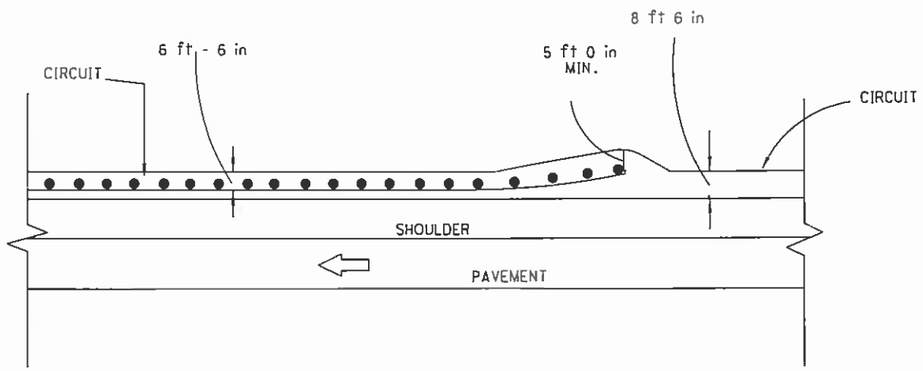

CIRCUIT LOCATION WITH GUARDRAIL

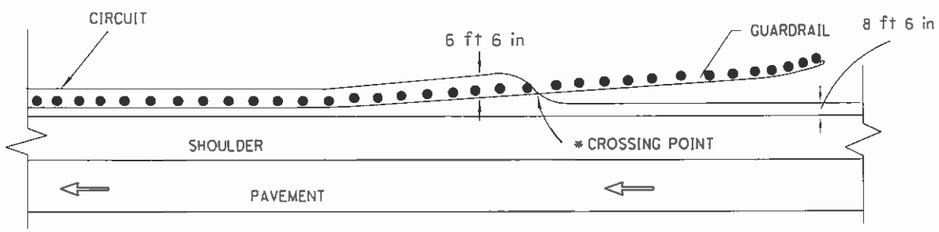

ALTERNATE CIRCUIT LOCATION WITH GUARDRAIL

NOTES

1. Payment for protection of duct-cable and distribution cable under guardrail, as detailed in methods 1 thru 3, shall be included in the unit prices bid for the affected cable.

METHODS OF PROTECTING DUCT-CABLE

(SEE NOTE 1)

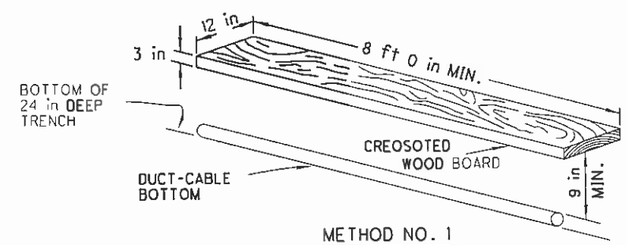

METHOD NO. 1

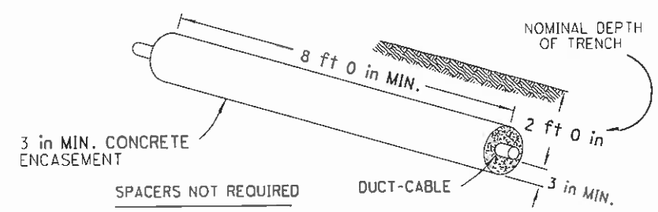

METHOD NO. 2

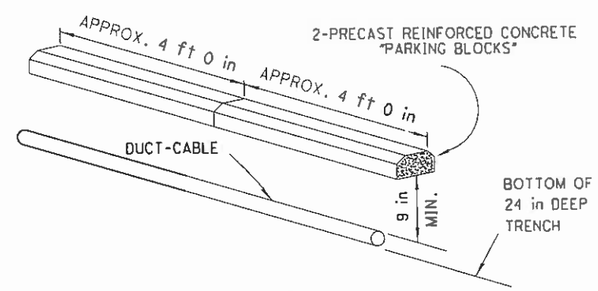

METHOD NO. 3

10-21-11

ROADWAY CONDUIT DETAILS I

OFFICE OF TRAFFIC ENGINEERING

HL-30.21

1/1

RM-BHZ

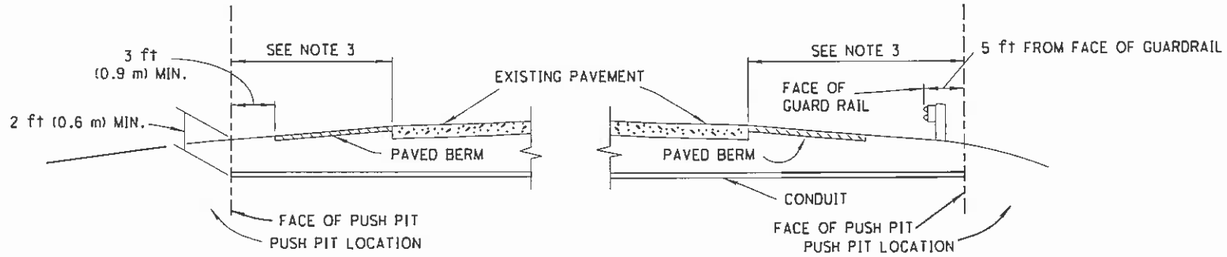

CONDUIT JACKED UNDER PAVEMENT

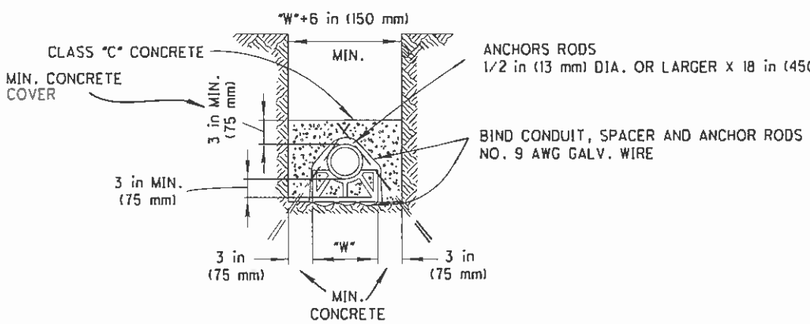

TRENCH SECTION

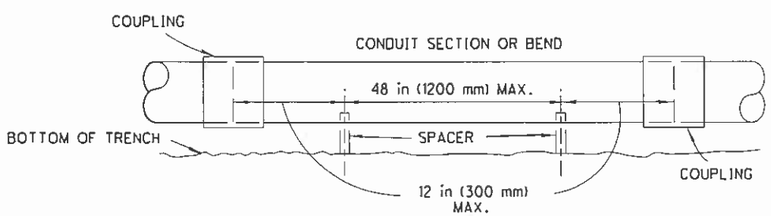

SIDE ELEVATION

CONCRETE ENCASED CONDUIT

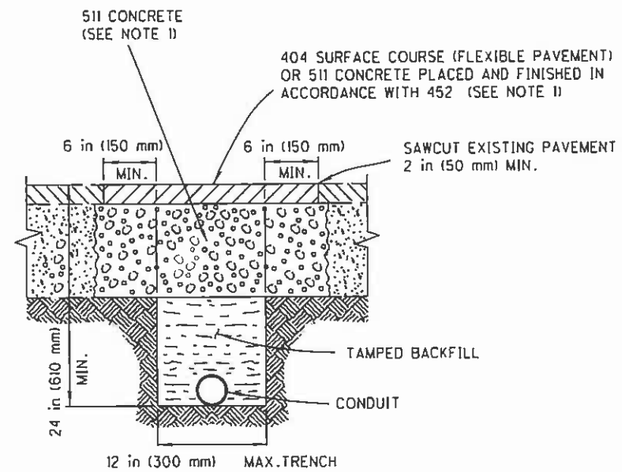

"T" TRENCH IN PAVED AREA

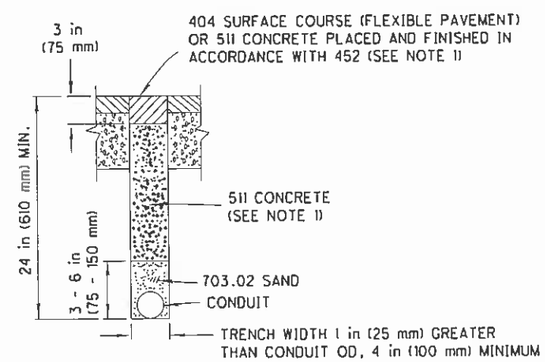

NARROW SLIT TYPE TRENCH IN PAVED AREA

NOTES

1. Replacement of disturbed flexible pavement shall consist of a 511 concrete subcourse with a 404 surface course. Replacement of rigid pavement shall consist of a 511 concrete course with surface finished in accordance with 452.
2. Restore disturbed facilities and surfaces to a condition equal to that existing before the work started.
3. When undermining shoulder areas that do not have paved berms, provide 3/4 inch (19 millimeter) thick steel surface plates, corrugated pipe sleeves, shoring or other approved means to prevent cave-in.
4. When conduit is jacked or drilled under divided pavements, cable may be installed in a trench through the median area when specified in the plans.

04-17-09

ROADWAY CONDUIT DETAILS II

OFFICE OF TRAFFIC ENGINEERING

HL-30.22

1/1

BM

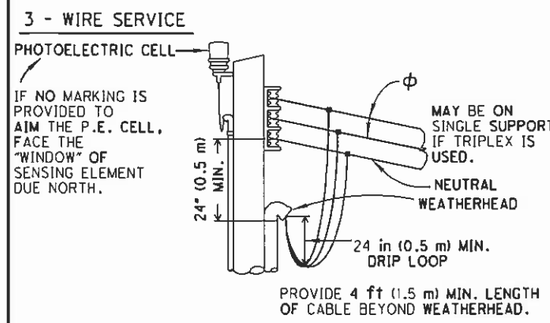

TYPICAL SERVICE POLE HEADS

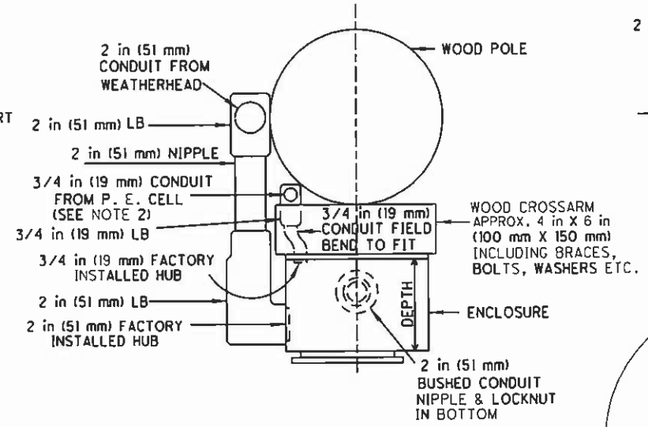

PLAN

SINGLE ENCLOSURE

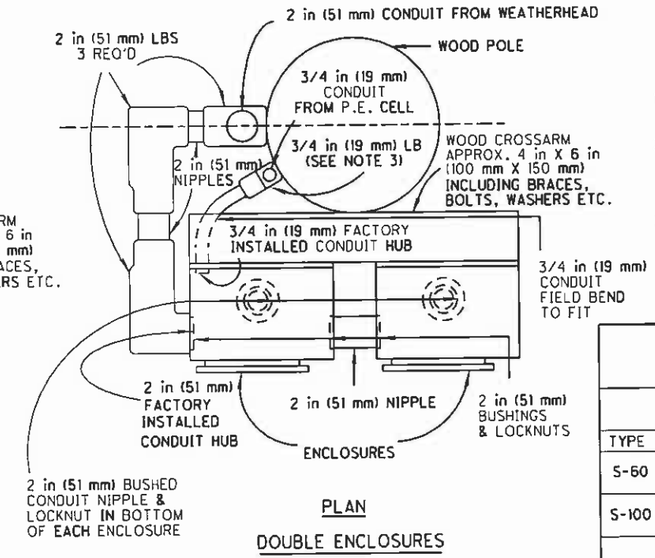

PLAN

DOUBLE ENCLOSURES

NOTES

1. All openings in enclosures shall be made by fabricator.
2. The 3/4 inch (19 mm) conduit for control wiring between P.E. cell and contactor enters the back of the evclosure at the bottom.
3. All donduit shall conform to 725.04.

ENCLOSURE TYPES

MINIMUM INTERIOR DIMENSIONS

TYPE	PRINCIPLE CONTENTS	WIDTH	HEIGHT	DEPTH*
S-60	60 AMPERE FUSED SWITCH	10 in (250 mm)	18 in (450 mm)	6 in (150 mm)
S-100	100 AMPERE FUSED SWITCH	14 in (350 mm)	24 in (600 mm)	7 in (175 mm)
SC-60	60 AMPERE FUSED SWITCH 60 AMPERE CONTACTOR	14 in (350 mm)	34 in (850 mm)	8 in (200 mm)
SC-100	100 AMPERE FUSED SWITCH 100 AMPERE CONTACTOR	18 in (450 mm)	38 in (950 mm)	8 in (200 mm)

*SEE "PLAN" VIEW OF SINGLE ENCLOSURE. THE INTERIOR DEPTH DIMENSION SHALL NOT INCLUDE ANY PART OF THE ENCLOSURE DOOR WHICH MAY PROTRUDE INTO THE INTERIOR OF THE ENCLOSURE.

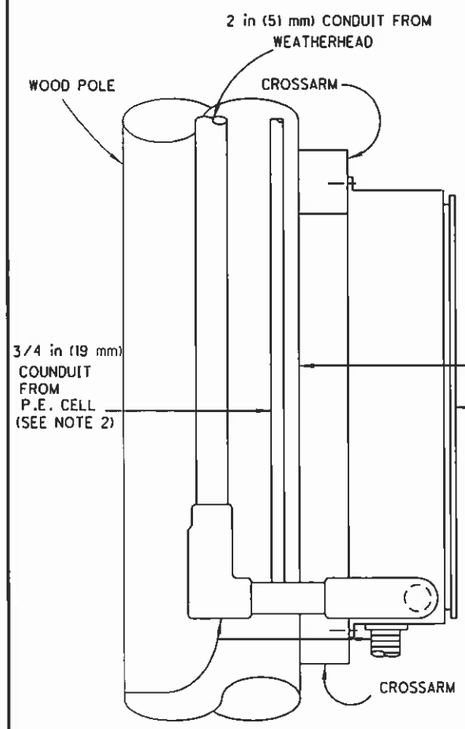

LEFT SIDE VIEW

SINGLE ENCLOSURES

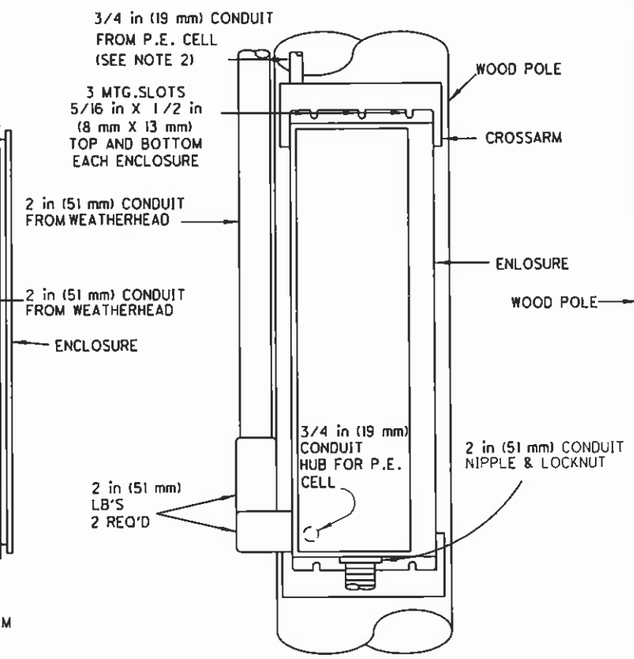

FRONT ELEVATION

SINGLE ENCLOSURE

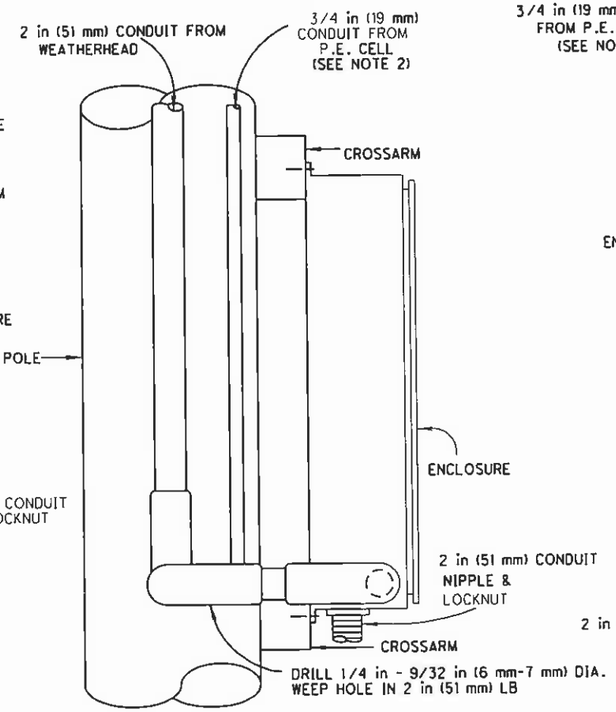

LEFT SIDE VIEW

DOUBLE ENCLOSURE

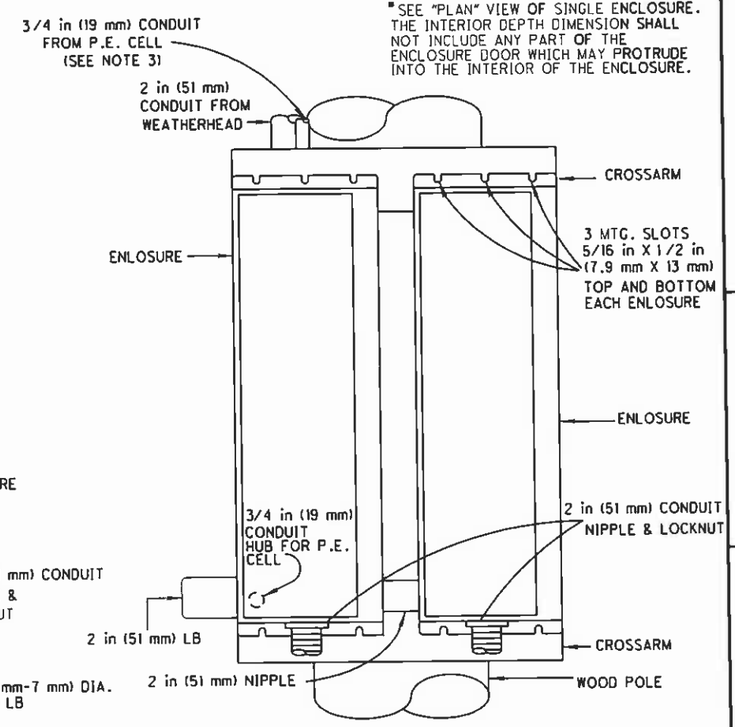

FRONT ELEVATION

DOUBLE ENCLOSURES

01-19-07

POWER SERVICE POLE MOUNTED

OFFICE OF TRAFFIC ENGINEERING

HL-40.10

1/1

RM-BHZ

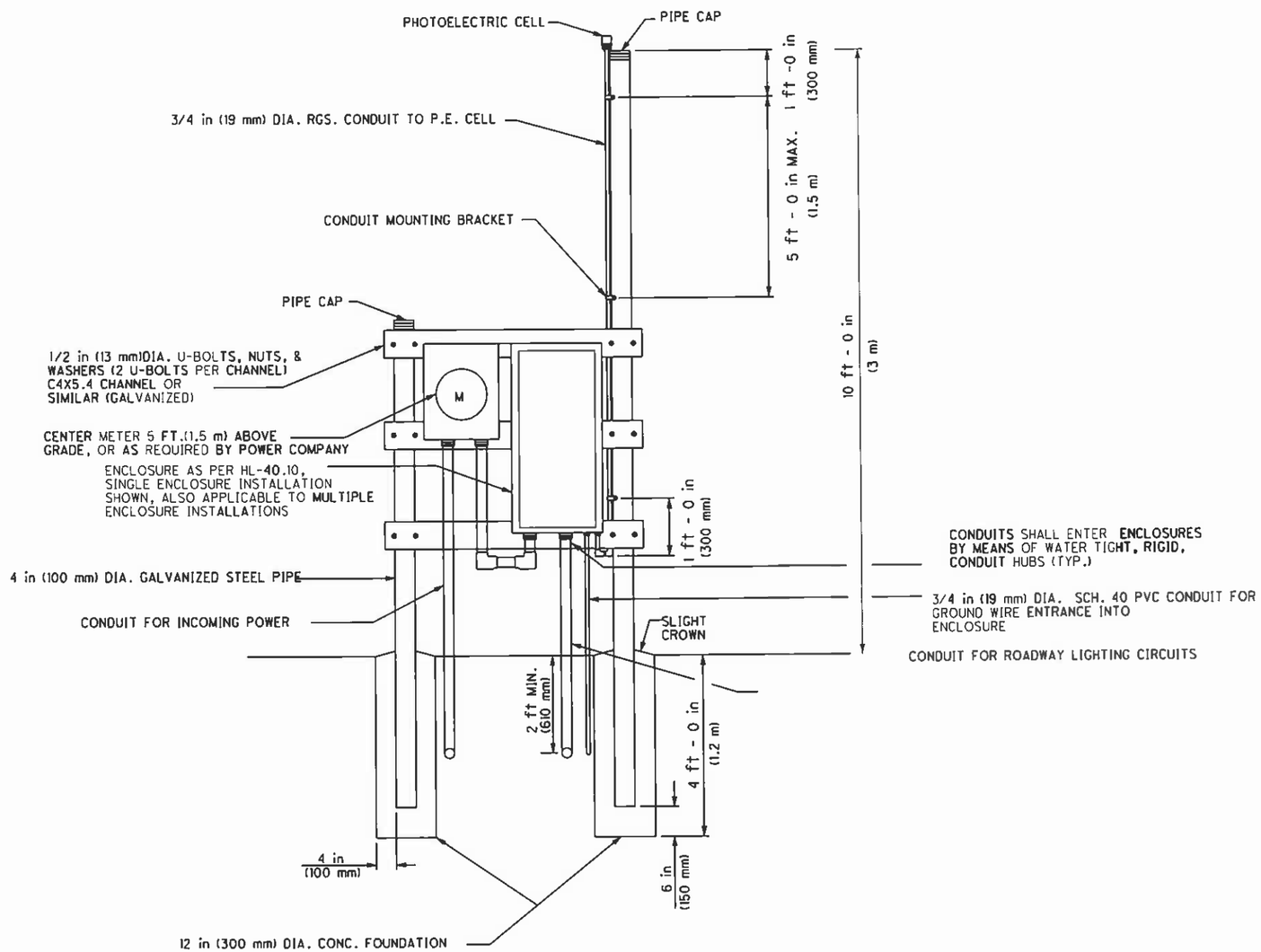

FRONT VIEW

01-19-07

POWER SERVICE GROUND MOUNTED

OFFICE OF TRAFFIC ENGINEERING

HL-40.20

1/1

RM-BHZ

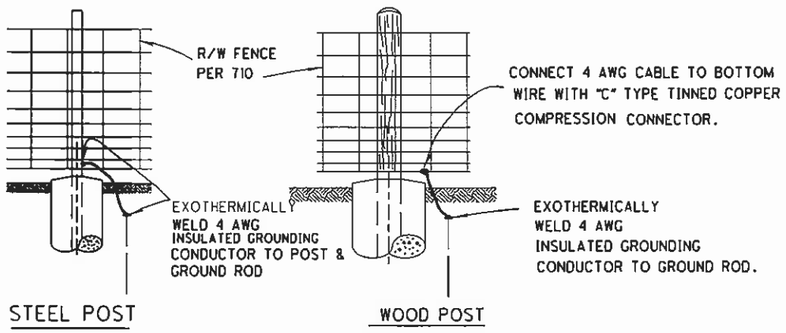

R/W FENCE GROUND

WHEN SPECIFICALLY NOTED ON THE PLANS, AND IN NOTES 1, 2, & 3, R/W FENCES SHALL BE GROUNDED AS SHOWN ABOVE. SEE ALSO NOTE 4.

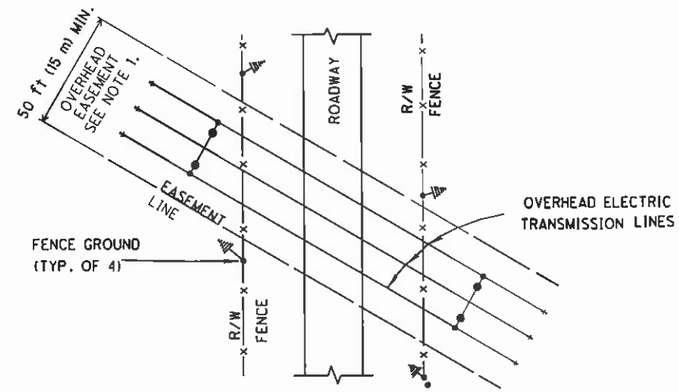

FENCE GROUNDS AT

TRANSMISSION LINE CROSSING

NOTES

1. Where overhead transmission line easements 50 feet (15 m) or more in width cross a fenced roadway right-of-way, each fence shall be grounded as shown hereon.
2. Where overhead electric power line easements less than 50 feet (15 m) in width cross a fenced roadway right-of-way. each fence shall be grounded directly below the centerline of the power line crossing.
3. Where overhead transmission lines rated 110 KV or higher are parallel to roadway fences and the transmission line easement is contiguous to the roadway right-of-way the roadway fences shall be grounded at least every 300 feet (100 m).
4. Fence grounds will be paid for at the unit price bid for 625 Ground Rod.
5. Apply two coats of insulating varnish over exothermic welds and exposed cable.

01-19-07

GROUNDING DETAILS

OFFICE OF TRAFFIC ENGINEERING

HL-50.11

1/1

RM-LAM

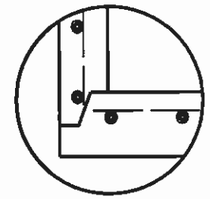

ALTERNATE CORNER DETAIL

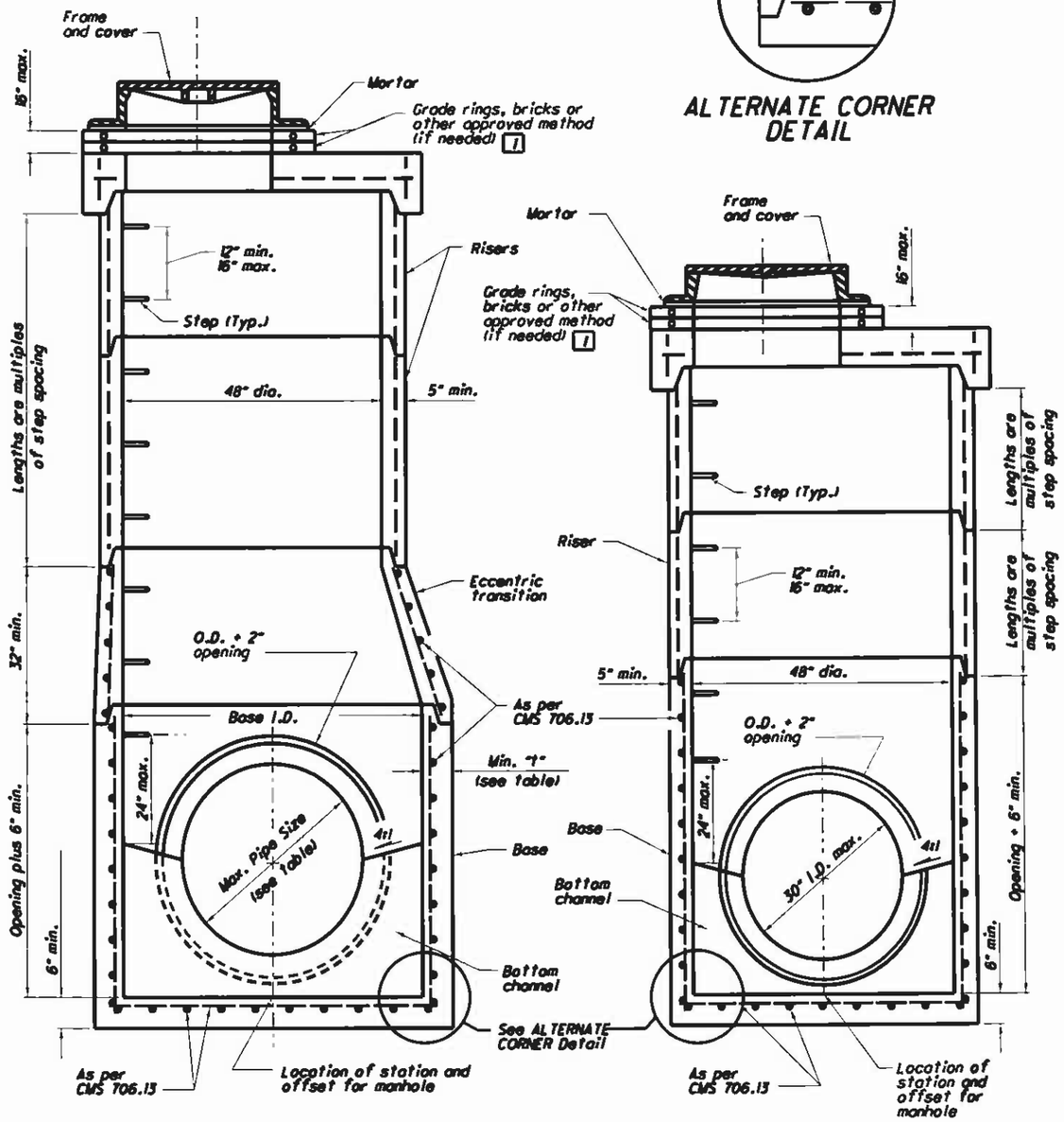

60" to 108" PRECAST BASE

SEE TABLE FOR MAXIMUM PIPE SIZES

48" PRECAST BASE

FOR 30" AND SMALLER PIPE

SECTION VIEWS OF REINFORCED PRECAST MANHOLES

NOTES

GENERAL: With normal soil and site conditions, this standard precast manhole may be used for any required manhole depth. Cast and assemble sections of the precast manhole with either all tongue or all groove ends up. Lift holes may be provided in each section for handling. Leave handling device for the flat slab in place.

TOP: Provide a flat slab for this section unless an eccentric cone is specified.

TRANSITION (OR REDUCER): This section can be either eccentric cone or flat slab.

BASE: Manhole No. 3 is shown with a monolithic floor and riser which may be cast in one or two operations. A permissible alternate is to cast and ship the floor and barrel separately. Provide openings for inlet and outlet pipes, either when the unit is cast or later, to meet project requirements. Bottom channels may be formed of concrete, precast in the base or field constructed as shown on SCD MH-1.1 and MH-3.1.

RISER SECTIONS: Openings for 18" and smaller inlet pipes may be either prefabricated or cut in the field provided the sides of the pipe at the springline do not project into the manhole.

CONNECTIONS: Connections between precast manhole sections and pipes on sanitary sewers may be sealed with resilient connectors conforming to ASTM C 923.

JOINT SEAL: Furnish resilient seal between precast manhole sections on sanitary sewers and flexible gasket joints per CMS 706.11.

OPENINGS: The maximum pipe opening is the O.D. of the pipe being supplied plus 2" when fabricated or field cut. Fill any voids per CMS 601.

MATERIALS: Provide materials for bases and other precast sections, including reinforcement not specified here, that meet the requirements of CMS 706.13.

DROP PIPE: When specified on the plans, construct drop pipe as shown on SCD MH-3.1.

STEPS, FRAMES AND COVERS: Meet the requirements shown on SCD MH-1.1.

TOP SLAB REBAR: Use epoxy coated reinforcing steel within the top slab.

LEGEND

1 Reconstruction to grade only. Approved materials are kept on file by the Office of Materials Management.

MAXIMUM PIPE SIZES

BASE I.D.	MIN. "t"	MAX. PIPE SIZE
60"	5"	36"
72"	6"	48"
84"	7"	54"
90"	7½"	60"
96"	8"	66"
108"	9"	72"

STATE OF OHIO DEPARTMENT OF TRANSPORTATION
STATE HYDRAULIC ENGINEER

REVISIONS
7-20-01
7-19-02
7-15-05
1-20-06
7-20-12

ROADWAY HYDRAULIC ENGINEER
Matt Cozzoli

OFFICE OF HYDRAULIC ENGINEERING

STANDARD HYDRAULIC CONSTRUCTION DRAWING
MANHOLE No. 3

SCD NUMBER
MH-1.2

1/2

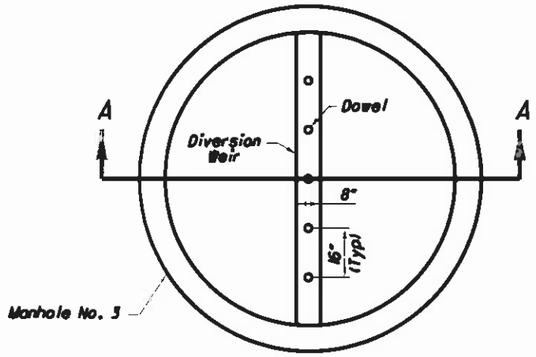

MANHOLE NO. 3 W/
__" BASE I.D. AND __" WEIR
(NTS)

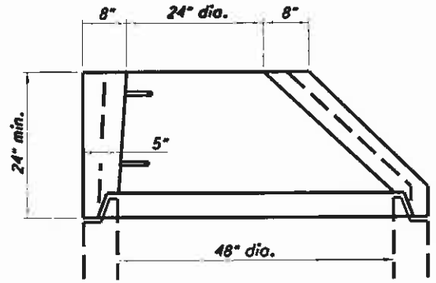

ALTERNATE
ECCENTRIC CONE TOP
(Only if specified)

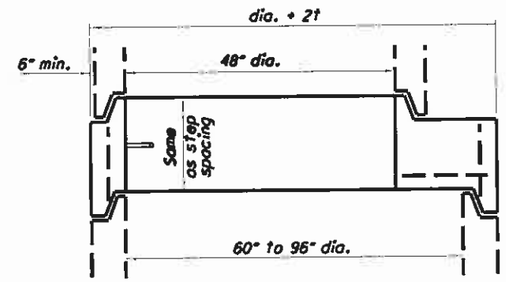

FLAT SLAB TRANSITION

NOTES

MANHOLE NO. 3 W/__" BASE I.D. AND __" DIVERSION WEIR: Furnish manhole base with precast diversion weir or construct diversion weir from Structural Concrete, Class C, or Brick and Masonry Units conforming to CMS 604. A bottom channel section for the manhole is not required when a diversion weir is specified on the plans.

Place diversion weir perpendicular to flow of inflowing trunk sewer. Dowel concrete or masonry units into the base of the manhole to a depth of 3" using epoxy coated #4 reinforcing bars. Start dowels at the center of the diversion weir and space 16" on center across the entire weir.

All materials and labor, including excavation and backfill, are paid for at the contract price for ITEM 604 - MANHOLE NO. 3 WITH __" BASE I.D. AND __" DIVERSION WEIR.

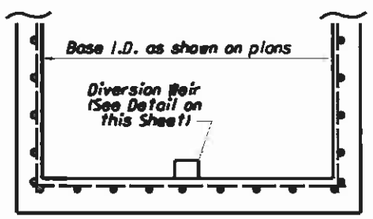

SECTION A-A
(NTS)

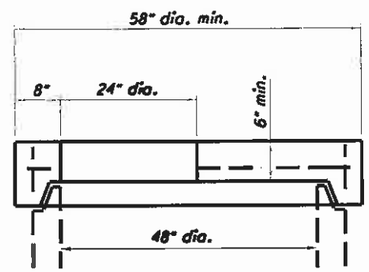

FLAT SLAB TOP

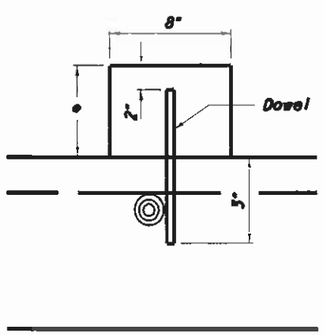

• Furnish weir height as shown in plans.

DIVERSION WEIR DETAIL
(NTS)

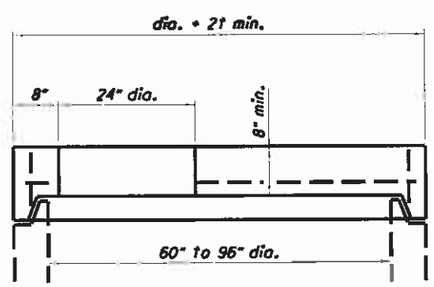

FLAT SLAB TOP

STATE OF OHIO DEPARTMENT OF TRANSPORTATION
STATE HYDRAULIC ENGINEER

REVISIONS
7-20-01
7-19-02
7-15-06
7-20-06
7-20-12

ROADWAY HYDRAULIC ENGINEER
Matt Cozzoli

OFFICE OF HYDRAULIC ENGINEERING

STANDARD HYDRAULIC CONSTRUCTION DRAWING
MANHOLE No. 3

SCD NUMBER
MH-1.2

2/2

LEGEND

DRUMS
PORTABLE BARRIER (PB)
REMOVE EXISTING MARKINGS
ATTENUATOR
OPTIONAL TREATMENT
DIRECTION OF TRAVEL

TABLE I (SIGN SPACING)

ROAD TYPE	DISTANCE BETWEEN SIGNS FT		
	A	B	C
MAJOR CONVENTIONAL	500	500	500
FREEWAY & EXPRESSWAY	1000	1500	2640

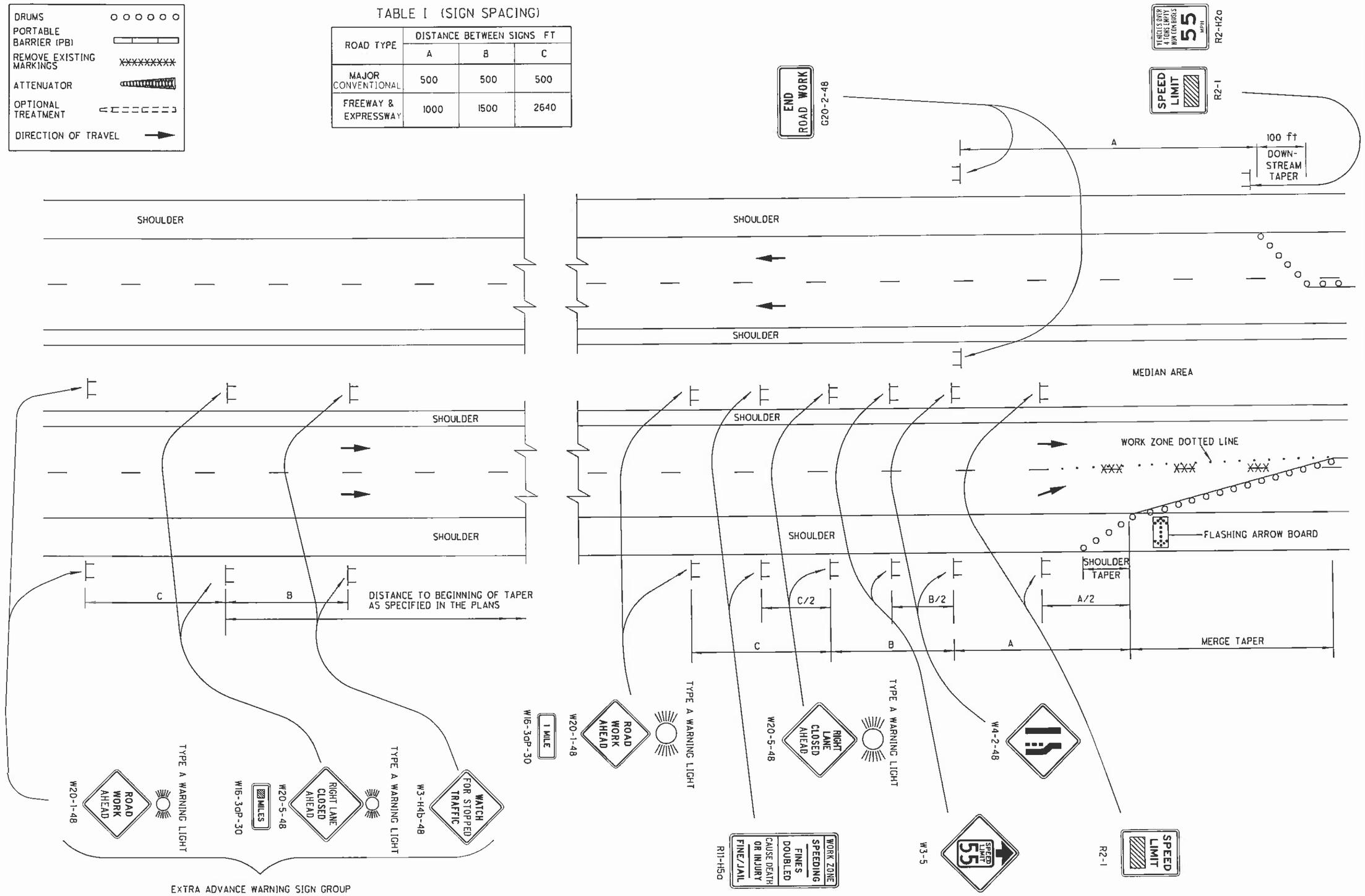

7-20-12

SUPPLEMENTAL ADVANCED SIGNS USED WITH LANE CLOSURES

OFFICE OF TRAFFIC ENGINEERING

MT-95.50

1 / 2

SHB/ LAM

GENERAL NOTES:

INTENDED USE

1. This Standard Construction Drawing is intended for use as a supplement to Standard Construction Drawings MT-95.30, MT-95.31, MT-95.32, MT-95.40, and MT-95.41. It is not intended to be used as a stand-alone drawing.

GENERAL SIGNING

2A. Maximum spacing between adjacent signs in a series should not be greater than 1.5 times the distances specified in Table I.

2B. END ROAD WORK (G20-2) signs are only required for lane closures of more than one day. It is intended that these signs be placed on the mainline, on all exit ramps, and on roadways exiting the work limits.

2C. Overlapping of signing for adjacent projects should be avoided where the messages could be confusing. Any W20-1 or G20-2 sign which falls within the limits of another traffic control zone shall be omitted or covered during the period when both projects are active.

2D. Median signing shall not apply to undivided highways.

2E. Provide the appropriate word or symbol legend necessary on lane reduction signs (W4-2, W20-5) to correctly identify which lane is to be closed.

SIGNING FOR SPEED REDUCTION AND INCREASED FINES

3A. Signing for speed reduction and/or for increased penalties shall be provided when called for in the plans.

3B. The Work Zone Speed Limit signs (R2-1) and the Speed Reduction signs (W3-5) may be erected or uncovered no more than 4 hours before a lane reduction or restriction is present. The R2-1 signs and the W3-5 signs shall be removed or covered no more than 4 hours following restoration of all lanes to traffic with no restrictions, or sooner as directed by the Engineer.

3C. Work Zone Speed Limit signs (R2-1) shall be repeated throughout the speed zone at intervals of 1 mile for speeds of 55 mph and 1/2 mile for speeds of 50 or 45 mph. They shall also be provided on the entrance ramps.

3D. Increased Penalties signs (R11-H5a) shall be repeated throughout the project limits at 2-mile intervals. They shall also be provided on the entrance ramps, with reduced size 24 x 48 inches.

3E. The size of Increased Penalties signs (R11-5a) placed in narrow medians may be reduced to 24 x 48 inches where the median is of inadequate width to accommodate the 48 x 96 inches signs.

3F. The Increased Penalties signs shall be mounted on 2 No.3 posts when located within clear zones.

3G. The Increased Penalties sign shall typically be located to provide a 6 to 12 feet clearance from edge of traveled lane to near edge of sign. If the sign on the side where work is taking place cannot be properly located due to the work in the area, the sign location may be adjusted laterally to clear the work area as directed by the Engineer.

However, the sign shall not be located more than 30 feet from the edge of pavement.

EXTRA ADVANCE WARNING SIGNS

4A. Extra Advance Warning Sign Groups consisting of ROAD WORK AHEAD (W20-1), LANE CLOSED AHEAD (W20-5) and WATCH FOR STOPPED TRAFFIC (W3-H4b) signs plus distance plaques may be specified in the plans or may be required to be erected, as determined by the Engineer.

4B. Installation of Extra Advance Warning Sign Groups shall not serve as a substitute for the standard advance signing group, beginning with the W20-1 sign, typically located at approximately 1 mile in advance of the beginning of the work area or the merge or shift taper.

4C. If a series of several Extra Advance Warning Sign groups is provided in advance of the same work area or roadway restriction, the ROAD WORK AHEAD (W20-1) sign may be omitted from all but the first of the Extra Advance Warning Sign Groups in the series.

7-20-12

SUPPLEMENTAL ADVANCED SIGNS USED WITH LANE CLOSURES

OFFICE OF TRAFFIC ENGINEERING

MT-95.50

SHB/ LAM

CONDITION I

DROP-OFFS BETWEEN ADJACENT TRAVELED LANE(S) /PAVED SHOULDER

(Freeways, Expressways, other Roadways ≥ 45 mph)

1. These treatments are to be used for resurfacing or pavement planing, etc. where a drop-off is located between or within traveled lanes and/or shoulder.

D	Treatment
≤1-1/2 in	Erect W8-11 or W8-9 sign as appropriate.
1-1/2 in-3 in	1) Optional Wedge Treatment OR 2) Close a lane and/or shoulder as per Condition II
>3 in	Close a lane and/or shoulder as per Condition II.

OPTIONAL WEDGE TREATMENT

(MILLING OR RESURFACING)

1. W8-9/W8-11 sign shall be used as appropriate.
2. This treatment shall not be used where a hot longitudnal joint per CMS 446 is required.

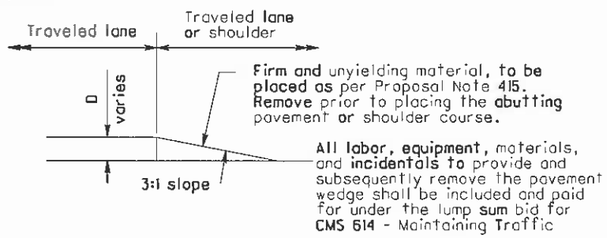

CONDITION II

DROP-OFFS BEYOND EDGE OF TRAVELED LANES/PAVED SHOULDER

(Freeways, Expressways, other Roadways ≥ 45 mph and minimal driveways)

1. The treatments indicated below are for use in conjunction with resurfacing, planing or excavations located beyond the edge line of the traveled lanes.
2. The treatments indicated below are applicable for pavement/shoulder drop-offs and for locations where foreslopes "A/B" are steeper than 3:1.
3. Where the drop-off is located outside the clear zone, no treatment is neccessary. (See Table II on MT-95.30, 95.40, or 102.10)
4. Where foreslopes "A/B" are flatter than 3:1, no treatment is necessary.

D	Method of Drop-off Protection to be used to separate the traffic from the drop-off						
	Drop-off location "X" from traveled lane <4 ft	Drop-off location "X" from traveled lane 4 -12 ft		Drop-off location "X" from traveled lane 12 -20 ft		Drop-off location "X" from traveled lane 20 -30 ft	
		Daytime Only	Night	Daytime Only	Night	Daytime Only	Night
≤3in	DRUMS or OPTIONAL WEDGE TREATMENT	NONE	NONE	NONE	NONE	NONE	NONE
>3 in-5 in	DRUMS or OPTIONAL WEDGE TREATMENT	DRUMS	DRUMS	NONE	NONE	NONE	NONE
>5 in-12 in	PCB	DRUMS	DRUMS	NONE	NONE	NONE	NONE
>12 in-24 in	PCB	DRUMS	PCB	DRUMS	DRUMS	NONE	NONE
>24 in	PCB	DRUMS	PCB	DRUMS	PCB	DRUMS	PCB

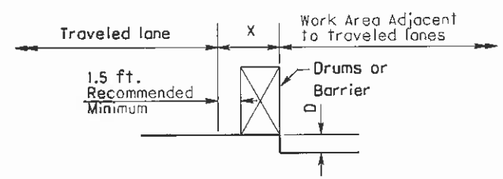

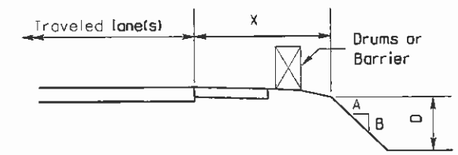

GENERAL NOTES

1. It is intended that this drawing be used for treatment of drop-offs that develop during construction operations and that are not otherwise provided for in the construction plans. Where the plans do not provide specific items for labor, equipment, or materials to implement the drop-off treatments specified herein, they shall be included for payment in the lump sum bid for CMS 614 - Maintaining Traffic
2. Minimum lane widths shall be 10 feet unless otherwise specified in the plans.
3. While the need for certain advisory signing is noted herein, it is not intended that this be indicative of all signing that may be required to advise or warn motorists, and all requirements of the Ohio Manual of Uniform Traffic Control Devices (OMUTCD) must be fulfilled.
4. In urban or otherwise heavily developed areas where intersections, driveways, pedestrians and/or bicyclists may be present in significant numbers, additional signing and protective measures other than those shown herein may be required.
5. The drop-off treatment selected for use at any given location shall be as appropriate for the prevailing conditions at the site.
6. Where portable concrete barrier is specified, it shall be in accordance with SCD RM-4.1 or 4.2 and with CMS 622.
7. For locations, such as at ramps, lane shifts, lane closures, etc., where traffic is required to negotiate a difference in elevation between pavements, the Optional Wedge Treatment shall be provided.
8. Pavement Repairs (or similar work):
   a. Lengths greater than 60 feet - utilize appropriate treatment from Condition I.
   b. Lengths of 60 feet or less - repairs shall be effected in accordance with CMS 255.08. Drums may be used as a separator adjacent to the traveled lane.
9. When drums are specified for a drop-off condition, a minimum number of four drums shall be used. Spacing shall be as indicated in the plans or as specified in the OMUTCD. Provisions shall be made to stabilize the drums (cones) to prevent them from blowing over.
10. When W8-11 (Uneven Lanes) signs or W8-9 (Low Shoulder) signs are required, they shall be placed 750 feet in advance of the condition on all intersecting entrance ramps within the limits of the condition, and immediately beyond all intersection roadways within the limits of the condition. When the drop-off condition extends more than 0.5 miles, additional signs should be erected at intervals of 1.0 mile or less.
11. Cones may be substituted for drums as follows:
    a. Cones used for daytime traffic control shall have a minimum height of 28 inches.
    b. Cones used for nighttime traffic control shall have a minimum height of 42 inches.
    c. Cones used at night shall be reflectorized.
    d. Use of cones at night shall be prohibited along tapers.
    e. Intermixing of drums and cones within the same run of barrier protection shall not be permitted.
12. Where drums are used, and their presence would reduce traveled lane widths to less than 10 feet, drums may be placed on the opposite level from that of traffic, provided the drop-off depth does not exceed 5 inches and approval is granted by the Project Engineer.
13. Portable concrete barrier shall be placed on the same level as the traffic surface and shall not encroached on lane width(s) designated as the minimum required for traffic use.

CONDITION III

DROP-OFFS BEHIND CURB WHERE THE CURB IS 6 INCHES OR GREATER IN HEIGHT AND THE LEGAL SPEED IS 40 MPH OR LESS

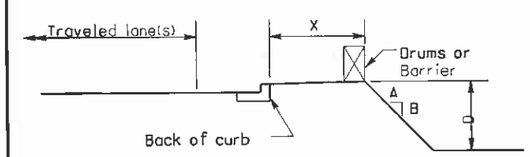

X	D	A/B	Treatment Required	
			Day	Night
0-10 ft	<12 in	Any	None	Drums
0-10 ft	>12 in	Any	Drums	Drums
>10 ft	Any	Any	None	None

10-21-11

DROP-OFFS IN WORK ZONES

OFFICE OF TRAFFIC ENGINEERING

MT-101.90

1/1

SHB

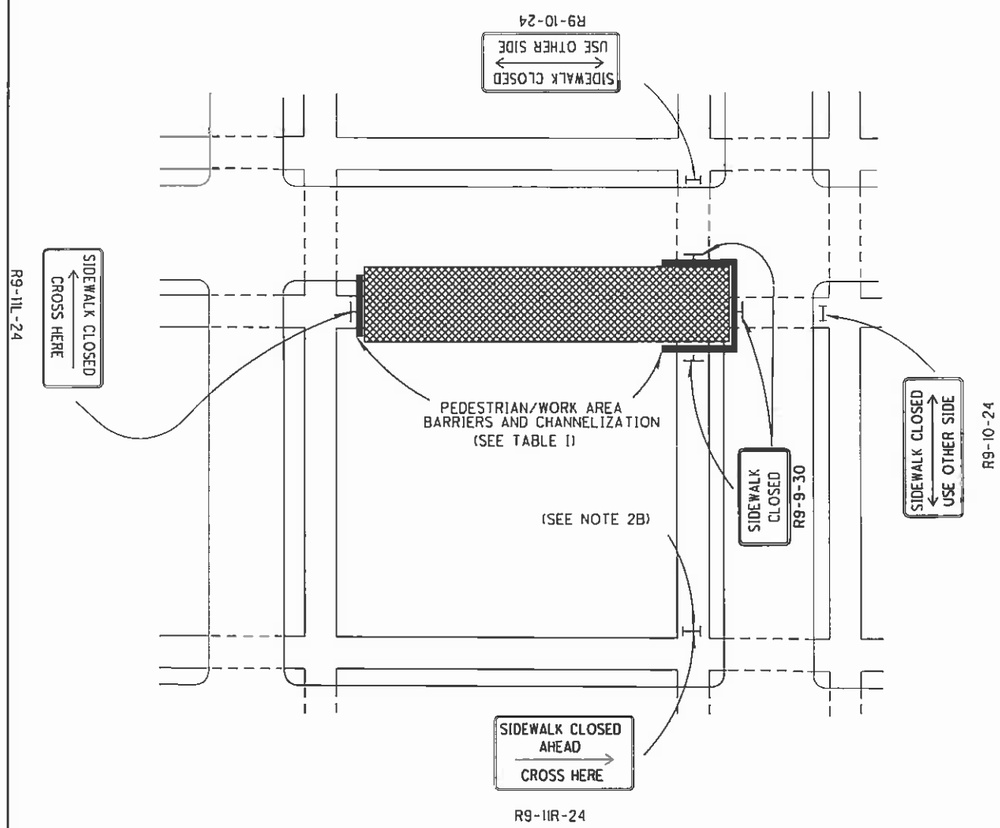

DETOUR TO OTHER SIDE OF STREET

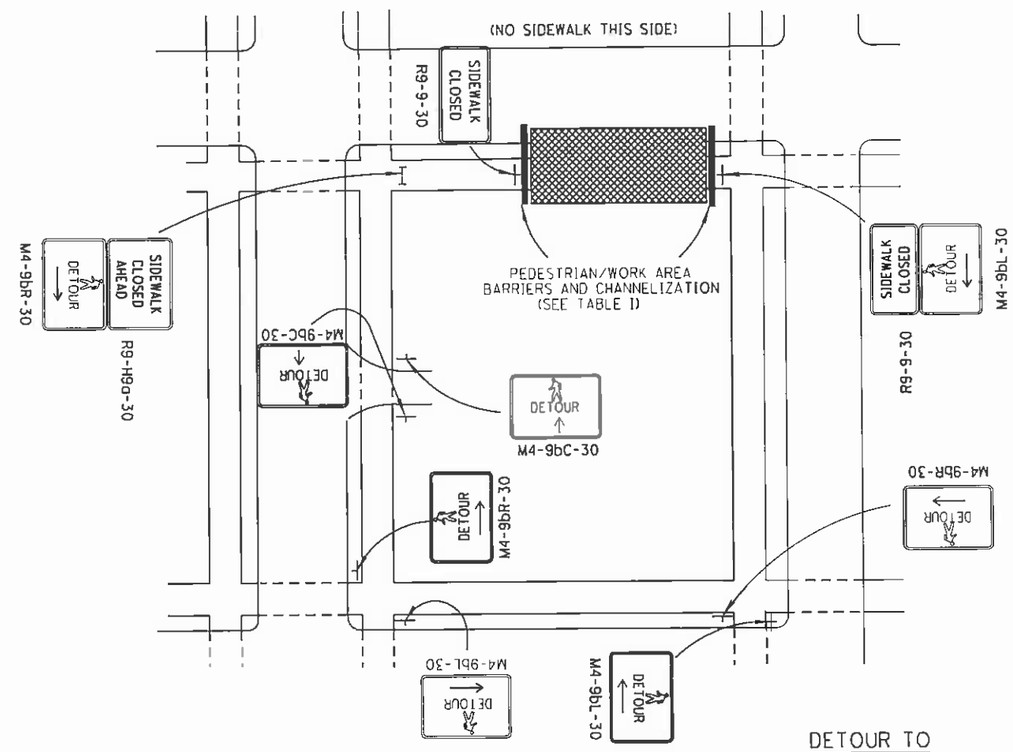

DETOUR TO
ANOTHER FACILITY

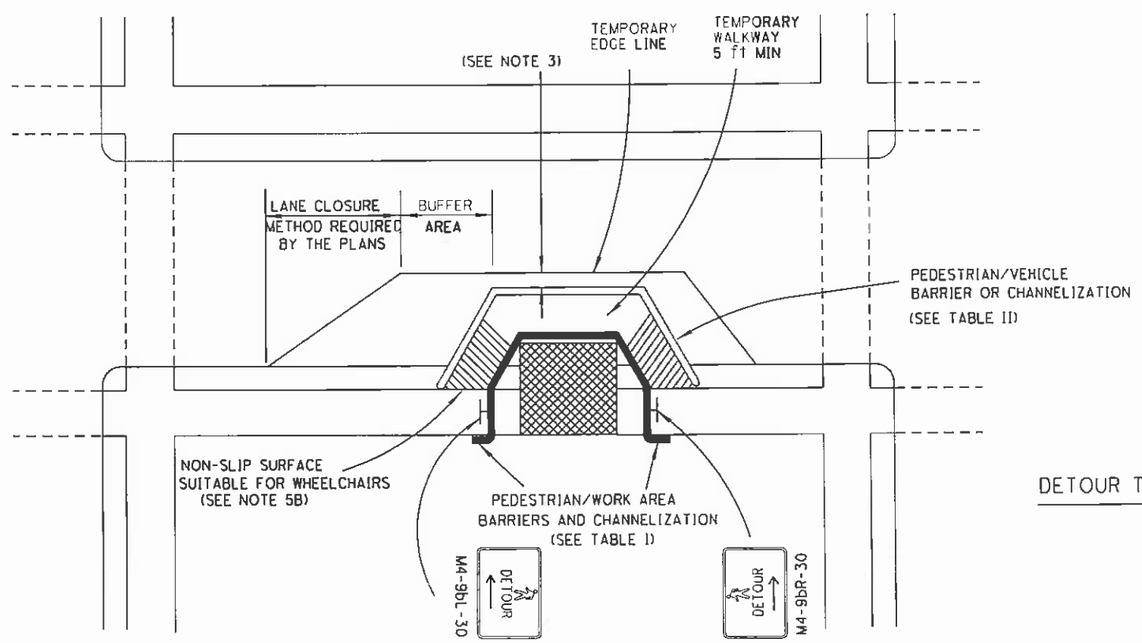

DETOUR TO TEMPORARY WALKWAY ("RUNAROUND")

ON ROADWAY

LEGEND

WORK AREA

TYPE I BARRICADE
WITH SIGN

7-20-12

PEDESTRIAN DETOUR METHODS

OFFICE OF TRAFFIC
ENGINEERING

MT-110.10

1/2

SHB

GENERAL NOTES

GENERAL

1A. This drawing presents traffic controls only for pedestrian traffic. Vehicular traffic control shall be provided as required.

1B. The purpose of the traffic control devices provided hereon is to divert and guide pedestrians whose path would otherwise enter the work area. The Contractor must take additional precautions as appropriate to protect other pedestrians or residents (including children) from exposure to hazards resulting from construction operations.

SIGNS AND BARRICADES

2A. All signs and barricades shall be placed so that they do not cause a hazard for pedestrians. All signs, not on barricades or channelizing devices, near or over active sidewalks shall have a minimum 7 foot vertical clearance. Signs mounted on barricades or channelizing devices shall have a minimum 1 foot clearance above the sidewalk.

2B. Advance signing for sidewalk closure shall be mounted on Type I Barricade, placed such that they will not block more than one-half the sidewalk.

PAVEMENT MARKING

3. Maintain 2 foot minimum when possible, between the work zone edge line and the barrier or channelizing device separating the pedestrian path from the vehicle path.

STAGED WORK

4. For repair or reconstruction work involving sidewalks on both sides of the street, the work shall be staged so that one side is rebuilt before the other is disrupted.

TEMPORARY WALKWAYS

5A. Pedestrian walkways constructed by the Contractor shall be kept free of any obstructions or hazards including holes, debris and mud. Other walkways damaged or dirtied by the Contractor shall be immediately repaired or cleaned.

5B. For construction of temporary walkway the maximum grade shall be 5 percent unless specified otherwise in the plans. The maximum cross slope shall be 2 percent.

LIGHTING AND DELINEATION

6A. At night, in otherwise unlighted areas, pedestrian-channelizing devices and barricades and pedestrian detour signs shall be provided with lighting as follows:
- a) Illumination shall provide a minimum of 1.2 foot candles on temporary walkways.
- b) Illumination shall be controlled by photocells.
- c) Illumination fixtures may consist of floodlights or other protected fixtures mounted at least 10 feet above ground.
- d) Illumination supports may be standard highway lighting poles, 4 x 4 inch wood posts or other supports approved by the Engineer.

6B. For barriers and channelizing devices located between the pedestrian way and the vehicle travel lane in unlighted areas, the devices shall be delineated or lighted at night as follows:
- a) Delineation of the portable barrier (PB) located between the vehicle lane and the pedestrian path shall be by barrier reflectors on the vehicle side of the PB and by object markers as per Standard Construction Drawing MT-101.70.
- b) Channelizing devices other than PB shall be provided with Type C steady burning lights on the vehicle side of the channelizer.

CHANNELIZATION REQUIREMENTS

7A. All channelization devices used to separate pedestrians from the work area or from the vehicular lane shall be as determined from the adjacent tables.

7B. Wood railing shall be a min. of a 2 x4 inch rail at 32 inch above ground. It shall be secured to 2 x 4 inch posts at not more than 6 feet spacing with secure attachment hardware. It shall be installed and braced to be essentially rigid and able to to support the following loads:
- a) A horizontal transverse load of 100 pounds at each post top.
- b) A vertical load of 250 pounds at midpoint between each post.

7C. Wood snow fence shall be nominally 42 inch high, securely supported by wood or steel posts at 6 feet maximum spacing. Plastic/nylon construction fence shall be bright orange. It shall be securely fastened to wood or metal posts at not more than 6 feet spacing. It shall be nominally 42 inch high and the top edge shall not sag below 30 inch (12 inch max. sag). Either of the fence sections with extensive broken slats or holes greater than 12 x 12 inch shall be repaired or replaced.

7D. Chain link fence, Type CLT shall conform to CMS 607 and appropriate details on Roadway Standard Drawings F-1.1, F-3.1 and F-3.2, exceptthat materials need not be new nor shall certification and tests be required.

7E. Plywood walls shall be a minimum of 5/8 inch exterior plywood, supported by 2 x 4 inch or heavier framing securely anchored and buttressed to resist wind load and/or persons. They shall be designed for a minimum wind loading of 30 pounds per square foot (or larger if local codes require). Height of the wall shall be not less than 7 feet above the walkway and if within range of thrown objects, shall be of sufficient height to screen pedestrians and passing cars.

7F. When portable barrier is provided, it shall be 32-inch portable barrier as per CMS 622. Delineation of portable barrier shall be as per Standard Construction Drawing MT-101.70.

7G. Barrier located along a "runaround" within the roadway pavement shall meet the following requirements:
- a) Be a minimum of 36 inches in height and continuous with the ground surface.
- b) Extend along the entire length of the runaround.
- c) Have no breaks or gaps along the full length of the barrier.
- d) Have a solid, continuous bottom rail between 4 inches and 12 inches in height.
- e) Be of high contrast color and material.
- f) Provide temporary ramps and boardwalks as required to ensure a smooth and continuous surface that complies with Americans with Disabilities Act Accessibility Guidelines (ADAAG).

BARRIER AND CHANNELIZING DEVICE SELECTION TABLES

TABLE I - CHANNELIZATION TYPE WHEN USED BETWEEN THE PEDESTRIAN WALKWAY AND THE WORK AREA:

DISTANCE FROM WORK ACTIVITY TO CHANNELIZATION	WORK CHARACTERISTICS*					
	< 2 ft. DROPOFF	2 -5 ft DROPOFF	> 5 ft. DROPOFF	DIRT/MUD SPLASHED	EQUIPMENT WHICH MOVES OR HAS EXPOSED MOVING PARTS	OPERATION WHICH THROWS STONE/ETC.
< 5 ft.	A-E	B-E	C-D	D	D-E	D
5 - 10 ft.	A-E	B-E	B-E	D	B-E	D
> 10 - 30 ft.	A-E	A-E	B-E	N/A	A-E	D
> 30 ft.	N/A	A-E	B-E	N/A	A-E	D

*These requirements shall not apply to paving, grinding or other similar operations.

TABLE II - CHANNELIZATION TYPE WHEN USED BETWEEN THE PEDESTRIAN WALKWAY AND THE VEHICULAR LANE:

DISTANCE FROM EDGE OF TRAFFIC LANE TO FACE OF CHANNELIZATION	SPEED LIMIT (MPH)		
	25	30 - 40	> 40
0 - 2 ft.	E	E	E
> 2-6 ft.	B-E	E	E
> 6 ft.	B-E	B-E	E

SELECTION LIST

A. WOOD RAILING
B. SNOW FENCE, WOOD OR ORANGE PLASTIC CONSTRUCTION FENCE
C. CHAIN LINK FENCE, TYPE CLT
D. PLYWOOD WALL
E. PORTABLE BARRIER

7-20-12

PEDESTRIAN DETOUR METHODS

OFFICE OF TRAFFIC ENGINEERING

MT-110.10

2/2

SHB

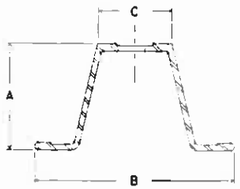

TYPE P

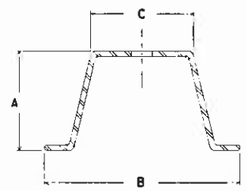

TYPE F

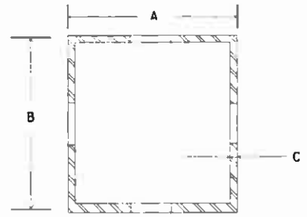

TYPE S

POST NO.	TYPE	LB/FT	POST DIMENSIONS (INCHES)			ANCHOR DIMENSIONS			NUMBER OF POSTS PERMITTED IN SEVEN FOOT PATH IN EXPOSED LOCATIONS
			A	B	C	A	B	C	
1	F	1.12	0.875	2.063	0.813				
2	P	2.00	1.469	3.063	1.281				2
	F	2.00	1.516	3.125	1.250				2
	S		1.750	1.750	0.083	2.000	2.000	0.105	2
3	P	3.00	1.875	3.500	1.313				2
	F	3.00	1.750	3.500	1.625				2
	S		2.00	2.00	0.083	2.250	2.250	0.105	2
4	P	4.00	TWO NO.2 POST						0
	F	4.00	TWO NO.2 POST						0
	S		2.500	2.500	0.105	3.000	3.000	0.188	1
6	P	6.00	TWO NO.3 POST						0
	F	6.00	TWO NO.3 POST						0

POST NO.	TYPE	Kg/m	POST DIMENSIONS (mm)			ANCHOR DIMENSIONS			NUMBER OF POSTS PERMITTED IN 2.1 m PATH IN EXPOSED LOCATIONS
			A	B	C	A	B	C	
1	F	1.7	22	52	21				
2	P	3.0	37	78	33				2
	F	3.0	39	79	32				2
	S		44	44	2.1	51	51	2.7	2
3	P	4.5	48	89	33				2
	F	4.5	44	89	41				2
	S		51	51	2.1	57	57	2.7	2
4	P	6.0	TWO NO.2 POST						0
	F	6.0	TWO NO.2 POST						0
	S		63	63	2.7	76	76	4.8	1
6	P	9.0	TWO NO.3 POST						0
	F	9.0	TWO NO.3 POST						0

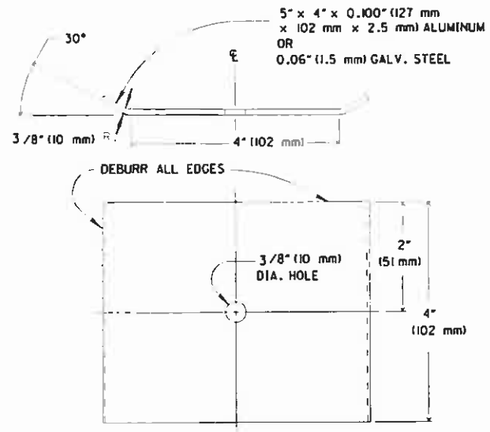

BEARING PLATE

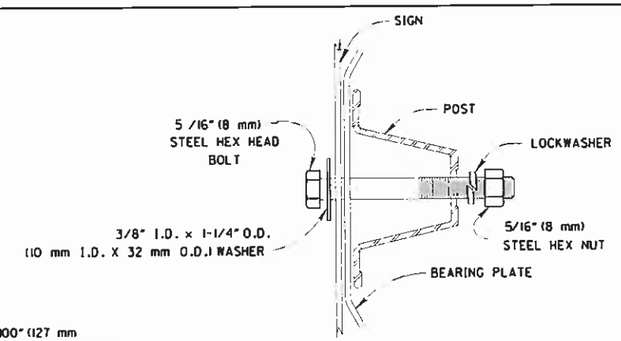

U - CHANNEL SIGN ATTACHMENT DETAIL

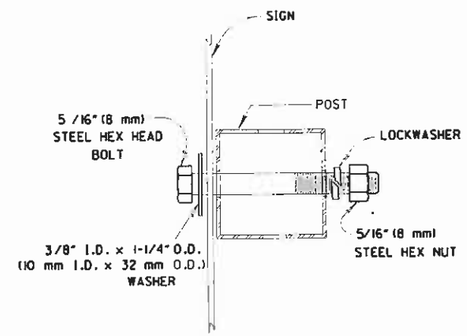

SQUARE POST SIGN ATTACHMENT DETAIL

NOTES

1. Install number 4 type P and F posts, and number 6 type P and F posts, only in protected locations (e.g. behind guardrail). Install two post installations of number 4 type S posts within 7 foot (2.1 m) path only in protected locations.
2. Use of anchor base with No. 2 and No. 3 square post is optional. Use of anchor base with No. 4 square post is required.
3. Square post may have die-cut knockouts or open holes.

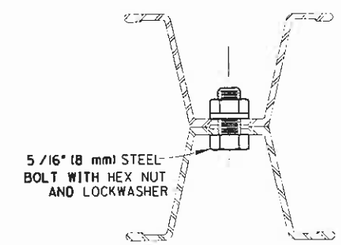

SECTION A - A

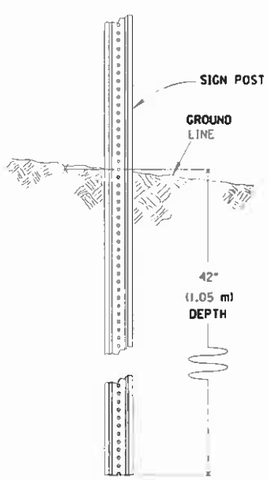

TYPICAL NO. 1, NO. 2 AND NO. 3 U - CHANNEL DRIVEN INSTALLATION

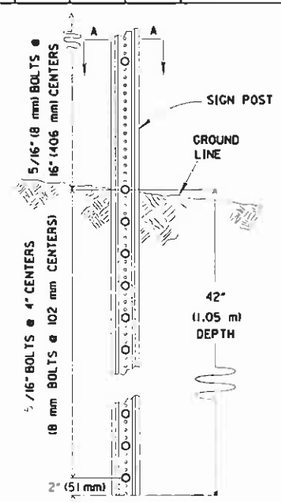

TYPICAL NO. 4 AND NO. 6 U - CHANNEL DRIVEN INSTALLATION

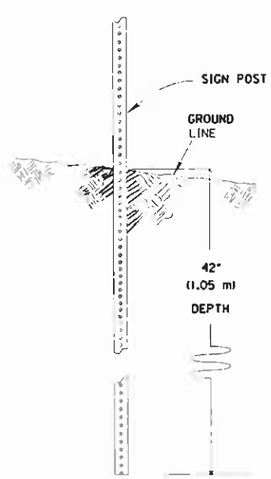

TYPICAL SQUARE POST DRIVEN INSTALLATION

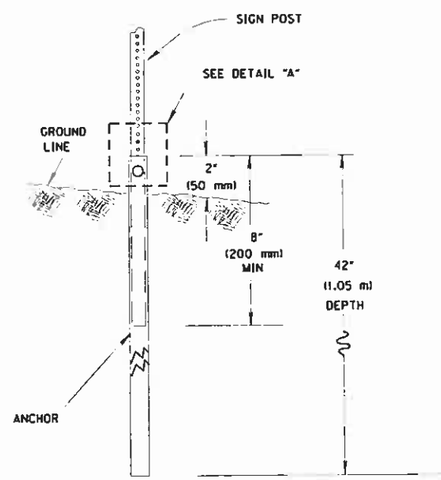

TYPICAL SQUARE POST ANCHOR BASE INSTALLATION

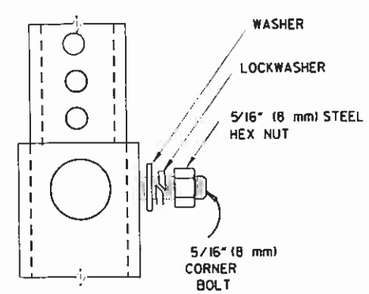

DETAIL "A"

01-19-01

YIELDING POST

OFFICE OF TRAFFIC ENGINEERING

TC-41.20

1/1

LAM

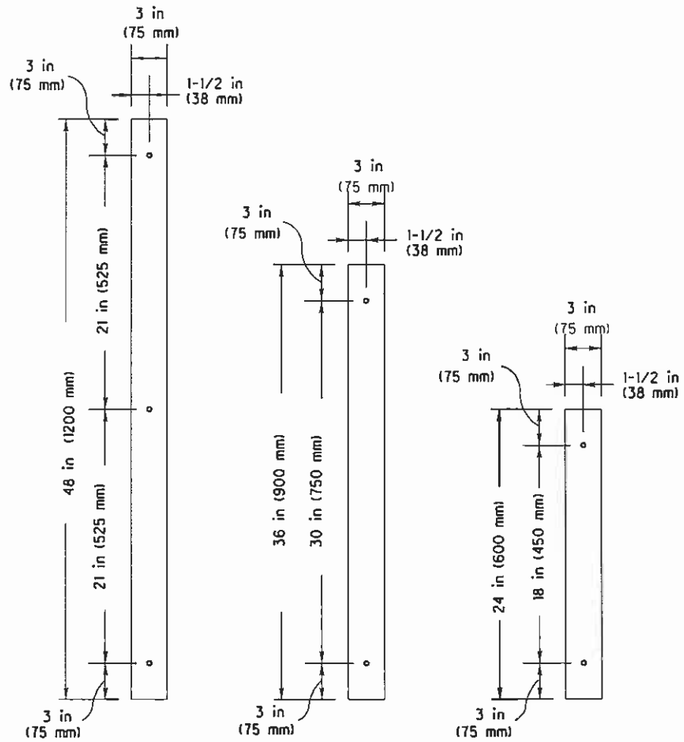

SIGN POST REFLECTORS - FRONT VIEW

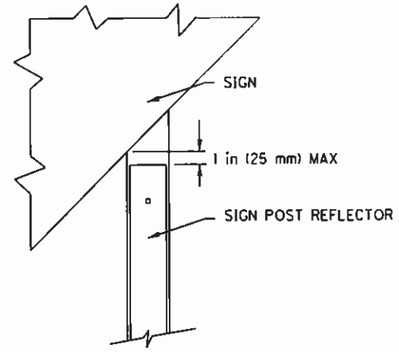

DETAIL A

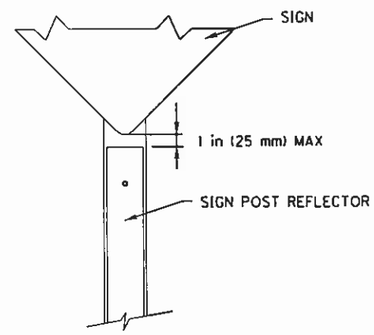

DETAIL B

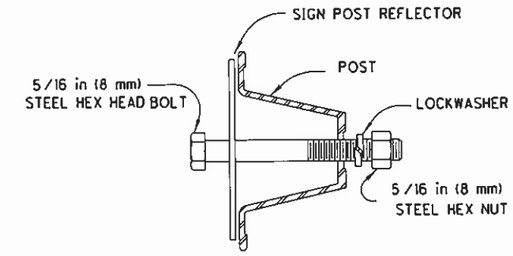

U - CHANNEL
ATTACHMENT DETAIL

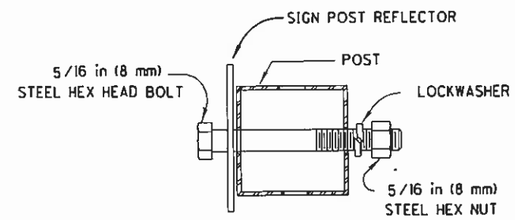

SQUARE POST
ATTACHMENT DETAIL

NOTES

1. Fabricate sign post reflectors out of 0.080 inch (2.0 mm) thick flat sheet aluminum. Drill or punch 3/8 inch (10 mm) diameter bolt holes, to a tolerance between holes of ± 1/32 inch (0.8 mm). Apply reflective sheeting to the surface of the aluminum.
2. Reflectorize the sign post from within 1 inch (25 mm) of the bottom of the sign down to 24 inches (600 mm) above the near edge of pavement or lower, using any combination of the standard lengths shown (see Table). Where this cannot be achieved due to the local ground profile, reflectorize the post to within 12 inches (300 mm) of the ground.
3. When using multiple sections of sign post reflector to achieve the required length of reflectorization, do not leave gaps between sections. The sign post reflectorization should appear as a continous strip.
4. Do not allow the sign post reflector to overlap the sign.
5. For multiple post installations, install the same length sign post reflector on each post.
6. For back-to-back installations of signs requiring sign post reflectorization, install sign post reflectors on both sides of the posts.
7. Install sign post reflectors matching the background color of the sign, except that the color of the reflector for the YIELD and DO NOT ENTER signs shall be red.

Actual Sign Mounting Height*	Minimum Length Sign Post Reflectorization
Up to 6 feet	4 feet
Over 6 feet to 7 feet	5 feet
Over 7 feet up to 8 feet	6 feet
Over 8 feet up to 9 feet	7 feet
Over 9 feet up to 10 feet	8 feet
Over 10 feet	See note 3

*Not the minimum allowable sign mounting height

Actual Sign Mounting Height*	Minimum Length Sign Post Reflectorization
Up to 1.8 m	1.2 m
Over 1.8 m to 2.1 m	1.5 m
Over 2.1 m up to 2.4 m	1.8 m
Over 2.4 m up to 2.7 m	2.1 m
Over 2.7 m up to 3.0 m	2.4 m
Over 3.0 m	See note 3

*Not the minimum allowable sign mounting height

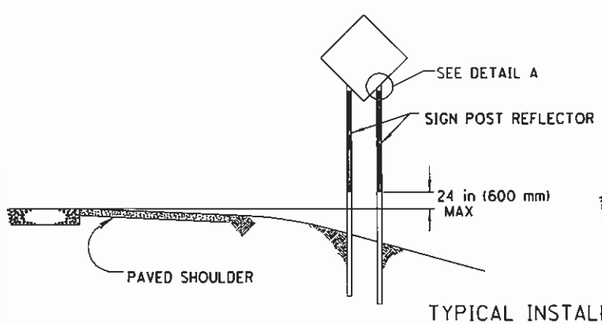

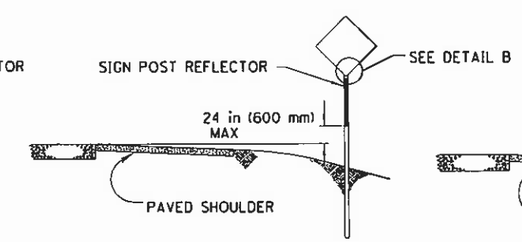

TYPICAL INSTALLATION DETAILS

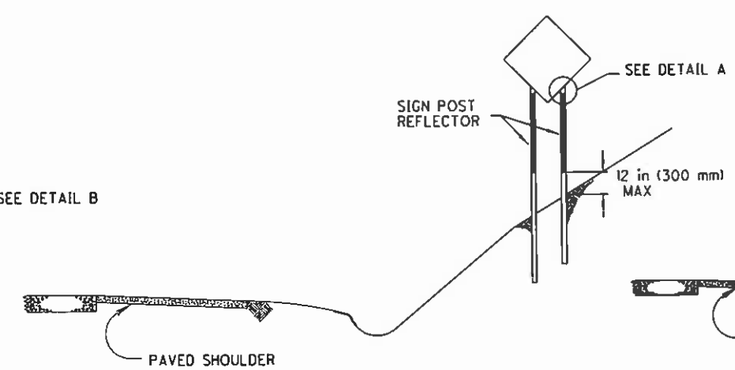

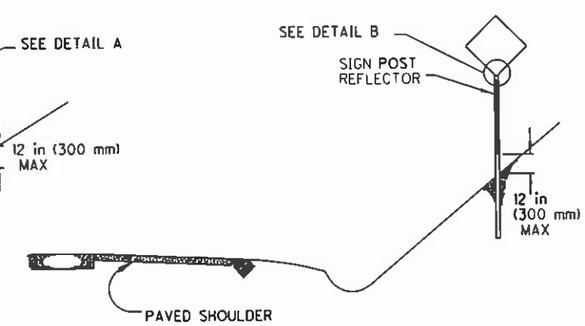

INSTALLATION DETAILS FOR CUT SECTION (SEE NOTE 3)

01-19-07

SIGN POST REFLECTORS

OFFICE OF TRAFFIC ENGINEERING

TC-41.30

1/1

RLM

NOTES

1. Use bearing plates conforming to details on Standard Construction Drawing TC-41.20.

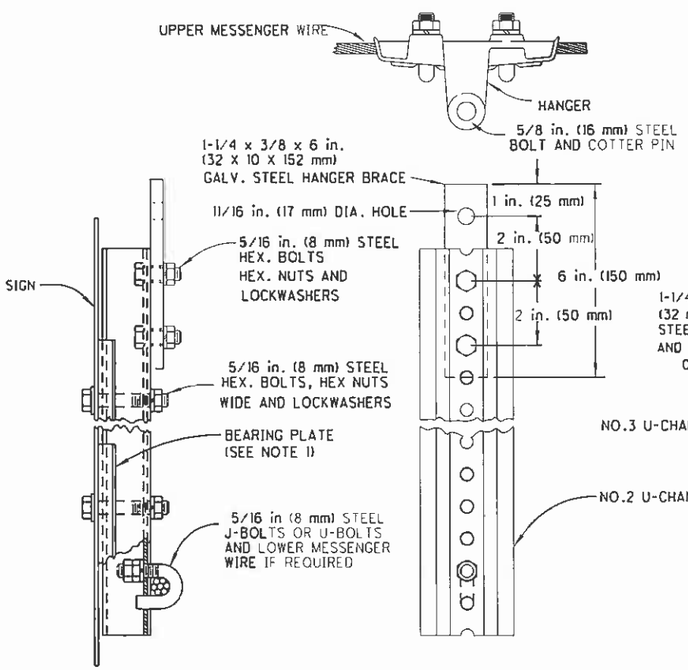

2 REQUIRED PER SIGN

SIGN HANGER ASSEMBLY, SPAN WIRE

TYPE 1

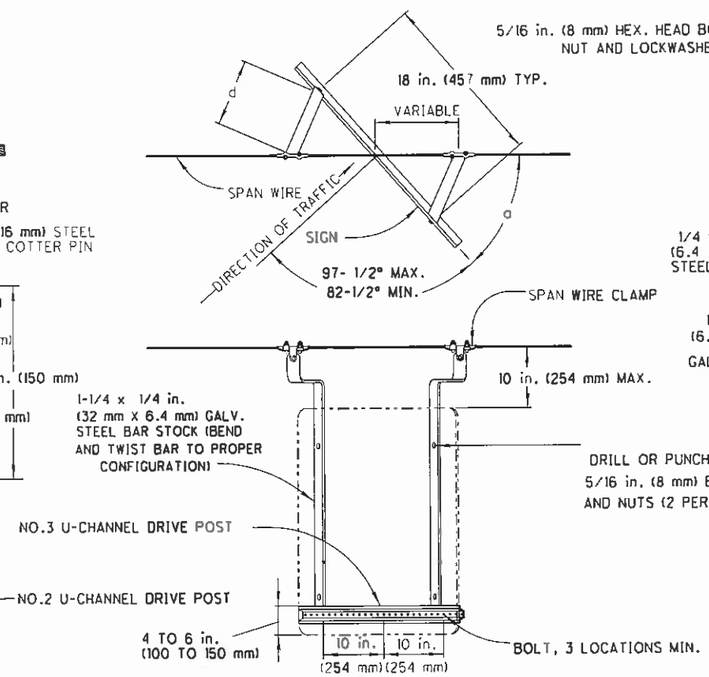

a	d (mm)
0°	0
15°	61
30°	119
45°	175
60°	229

a	d (in)
0°	0
15°	2.4
30°	4.7
45°	6.9
60°	9

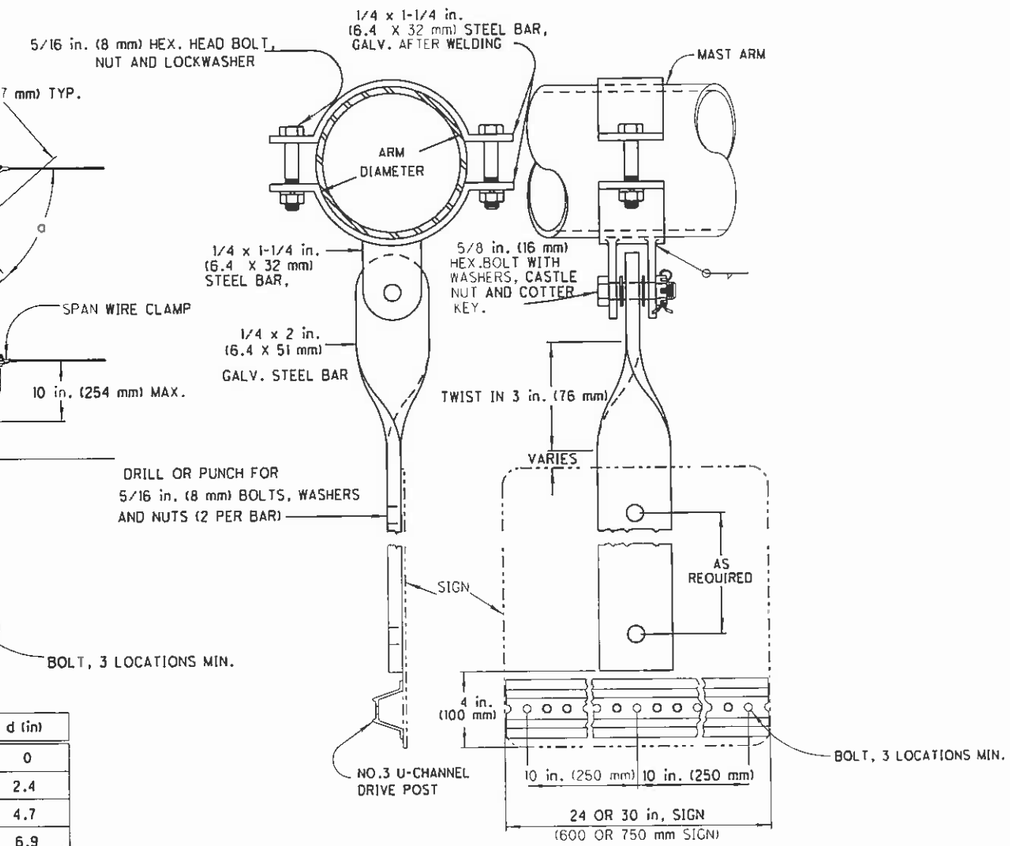

SIGN HANGER ASSEMBLY, MAST ARM

01-21-11

SPECIAL SIGN ATTACHMENTS

OFFICE OF TRAFFIC ENGINEERING

TC-41.41

1/1

LAM

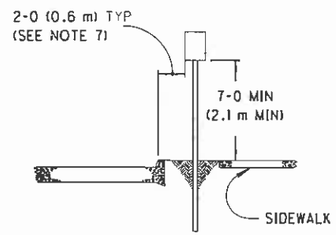

URBAN-RESIDENTIAL AND BUSINESS

AND ALL AREAS WITH SIDEWALKS

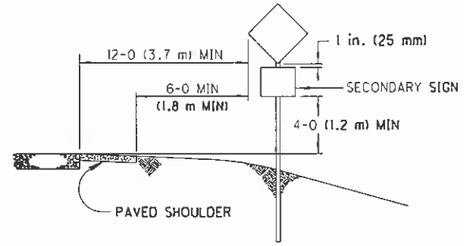

RURAL

WITH SECONDARY SIGN

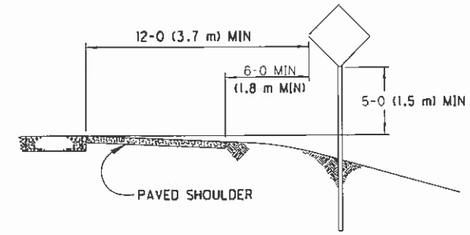

RURAL

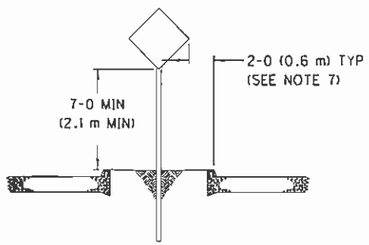

MEDIAN

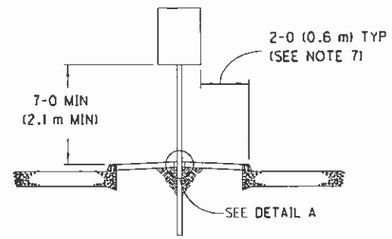

PAVED MEDIAN

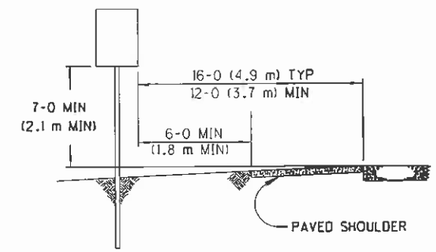

MEDIAN-EXPRESSWAY OR FREEWAY

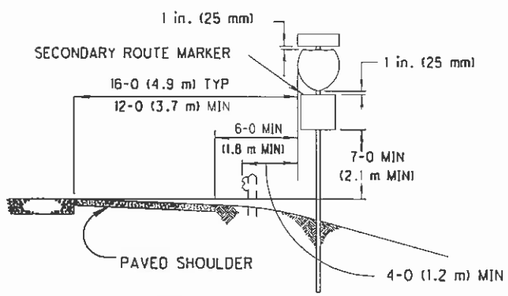

EXPRESSWAY OR FREEWAY

WITH SECONDARY SIGN

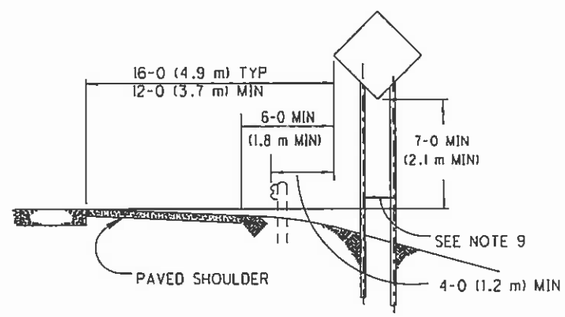

EXPRESSWAY OR FREEWAY

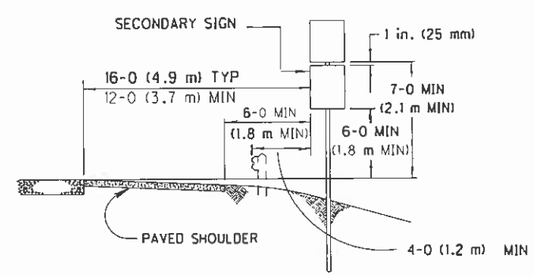

EXPRESSWAY OR FREEWAY

WITH SECONDARY SIGN

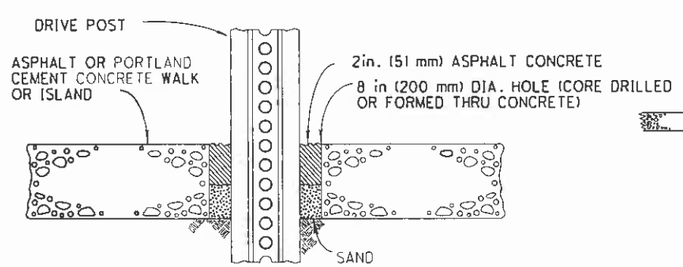

DETAIL A

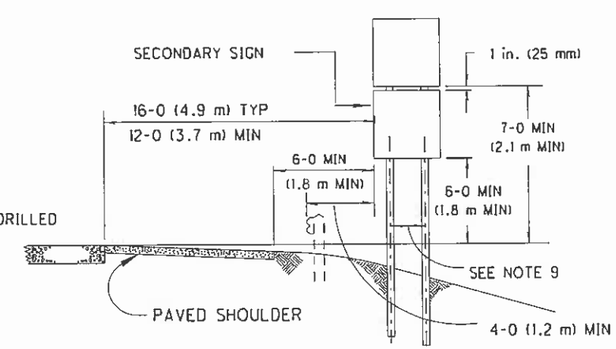

EXPRESSWAY OR FREEWAY

WITH SECONDARY SIGN

All dimensions shown as ft-in unless otherwise noted.

NOTES

1. See Standard Construction Drawing TC-41.20 for details on yielding supports.
2. All signs shall be placed 90° to the roadway, except as described in notes 3 and 4 below.
3. Install chevron alignment and one-direction large arrow signs on the outside of a turn or curve in line with and at approximately 90° to approaching traffic.
4. Install parking signs with arrows at an angle of not less than 30° nor more than 45° with the line of traffic flow.
5. Install chevron alignment signs at a minimum mounting height of 4 feet (1.2 meters) above the near edge of the traveled way.
6. Install object markers at a minimum mounting height of 4 feet (1.2 meters) above the near edge of the traveled way for obstructions 8 feet (2.4 meters) or less from the edge of shoulder or curb. Install object markers at a minimum mounting height of 4 feet (1.2 meters) above the ground for obstructions more than 8 feet (2.4 meters) from the edge of shoulder or curb.
7. Install signs with a minimum lateral offset of 1 foot (0.3 meter) from the face of curb where sidewalk width is limited or where existing poles are close to the curb.
8. On conventional roads where it is impractical to locate a sign with the lateral offsets shown, install signs with a minimum lateral offset of 2 feet (0.6 meter).
9. See Standard Construction Drawings TC-52.10 and TC-52.20 for dimensions between supports.

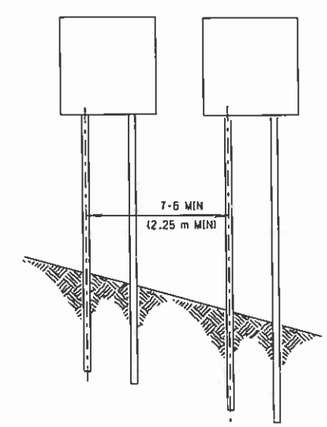

ADJACENT SIGN INSTALLATION

FOR NO. 2 AND NO. 3 YIELDING POST SUPPORTS IN EXPOSED LOCATIONS

01-21-11

TYPICAL FLAT SHEET SIGN PLACEMENT

OFFICE OF TRAFFIC ENGINEERING

TC-42.20

1/1

LAM

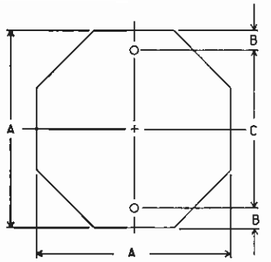

OCTA-1-2

A	B	C	THICKNESS	AREA (FT2)
18	3	12	0.080	2.25
24	3	18	0.080	4.00
30	3	24	0.080	6.25
36	3	30	0.080	9.00

A	B	C	THICKNESS	AREA (m2)
450	75	300	2.0	0.20
600	75	450	2.0	0.36
750	75	600	2.0	0.56
900	75	750	2.0	0.81

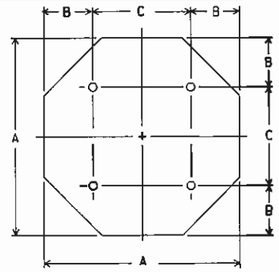

OCTA-2-4

A	B	C	THICKNESS	AREA (FT²)
48	9	30	0.100	16.00

A	B	C	THICKNESS	AREA (m²)
1200	225	750	2.5	1.44

SHAPE — NO. BOLTS REQUIRED

OCTA-2-4

NO. SUPPORTS REQUIRED

NOTES

1. For each detail shown, the top table is in inches and the lower table is in millimeters unless otherwise noted.
2. All bolt holes shall be 3/8 inches (10 mm) in diameter, and may be drilled or punched to finished size.
3. Dimensions between bolt holes shall be to tolerance of ± 1/32 inch (± 0.8 mm).
4. All route shields shall be 0.080 inches (2.0 mm) thick and attached to extrusheet signs with aluminum blind rivets.
5. For back-to-back mounting of STOP and DO NOT ENTER sign, follow details shown on Standard Construction Drawing TC-41.50.

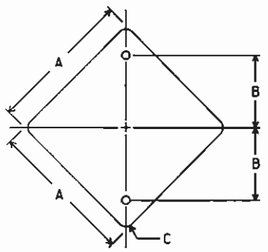

DIA-1-2

A	B	C	THICKNESS	AREA (FT2)
18	9	1.5	0.080	2.25
24	12	1.5	0.080	4.00
30	15	1.875	0.080	6.25
36	18	2.25	0.080	9.00

A	B	C	THICKNESS	AREA (m 2)
450	225	40	2.0	0.20
600	300	50	2.0	0.36
750	375	50	2.0	0.56
900	450	60	2.0	0.81

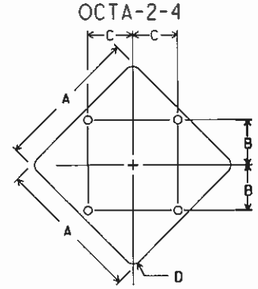

DIA-2-4

A	B	C	D	THICKNESS	AREA (FT²)
48	15	15	3	0.100	16.00
60	18	18	3.75	0.100	25.00

A	B	C	D	THICKNESS	AREA (m²)
1200	375	375	70	2.5	1.44
1500	450	450	70	2.5	2.25

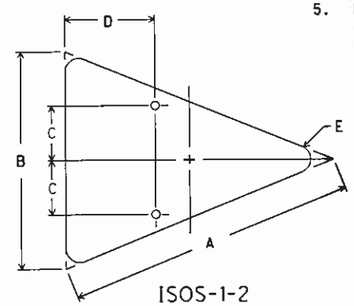

ISOS-1-2

A	B	C	D	E	THICKNESS	AREA (FT²)
40	30	7.5	12	1.875	0.080	3.86
48	36	9	15	2.25	0.100	5.56

A	B	C	D	E	THICKNESS	AREA (m²)
1000	750	187	300	50	2.0	0.35
1200	900	225	375	60	2.5	0.50

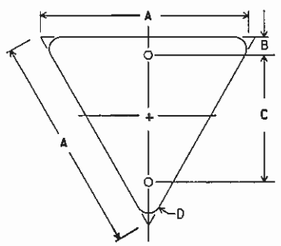

TRI-1-2

A	B	C	D	THICKNESS	AREA (FT2)
24	2	14	1.5	0.080	1.73
30	3	18	1.5	0.080	2.71
36	3	21	2	0.080	3.90

A	B	C	D	THICKNESS	AREA (m2)
600	50	350	50	2.0	0.16
750	75	450	50	2.0	0.24
900	75	525	60	2.0	0.35

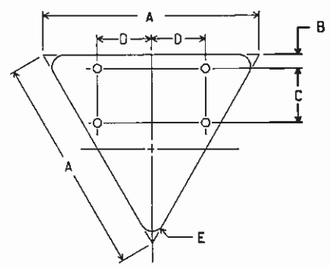

TRI-2-4

A	B	C	D	E	THICKNESS	AREA (FT²)
48	3	12	12	3	0.100	6.93
60	3	18	15	4	0.100	10.83

A	B	C	D	E	THICKNESS	AREA (m²)
1200	75	300	300	70	2.5	0.62
1500	75	450	375	70	2.5	0.97

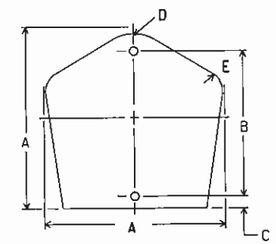

CO-1-2

A	B	C	D	E	THICKNESS	AREA (FT²)
18	15	1	5	2	0.080	2.25
24	18	2	5.313	2.688	0.080	4.00
30	24	2	6.625	3.375	0.080	6.25

A	B	C	D	E	THICKNESS	AREA (m²)
450	375	25	125	50	2.0	0.20
600	450	50	133	67	2.0	0.36
750	600	50	165	85	2.0	0.56

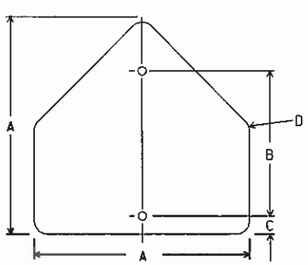

PENT-1-2

A	B	C	D	THICKNESS	AREA (FT2)
30	21	3	1.875	0.080	6.25
36	24	3	2.25	0.080	9.00

A	B	C	D	THICKNESS	AREA (m2)
750	525	75	50	2.0	0.56
900	600	75	60	2.0	0.81

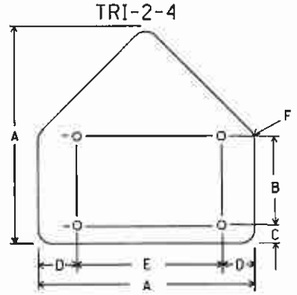

PENT-2-4

A	B	C	D	E	F	THICKNESS	AREA (FT²)
48	18	6	9	30	3	0.100	16.00

A	B	C	D	E	F	THICKNESS	AREA (m²)
1200	450	150	225	750	70	2.5	1.44

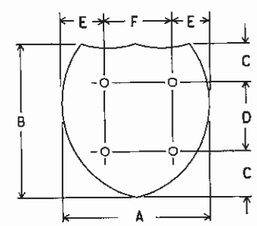

I.S.-2-4

A	B	C	D	E	F	THICKNESS	AREA (FT²)
48	48	9	30	9	30	0.100	16.00
60	48	9	30	12	36	0.100	20.00

A	B	C	D	E	F	THICKNESS	AREA (m²)
1200	1200	225	750	225	750	2.5	1.44
1500	1200	225	750	300	900	2.5	1.80

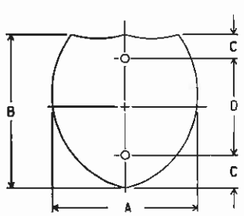

I.S.-1-2

A	B	C	D	THICKNESS	AREA (FT2)
24	24	3	18	0.080	4.00
24	30	3	18	0.080	5.00
30	30	3	24	0.080	6.25
37.5	30	3	24	0.080	7.81
36	36	6	24	0.080	9.00
45	36	6	24	0.080	11.25

A	B	C	D	THICKNESS	AREA (m2)
600	600	75	450	2.0	0.20
600	750	75	450	2.0	0.36
750	750	75	600	2.0	0.56
938	750	75	600	2.0	0.70
900	900	150	600	2.0	0.81
1125	900	150	600	2.0	1.01

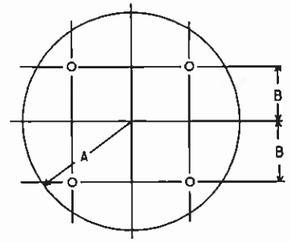

CIR-2-4

A	B	THICKNESS	AREA (FT²)
24	15	0.100	16.00

A	B	THICKNESS	AREA (m²)
600	375	2.5	1.44

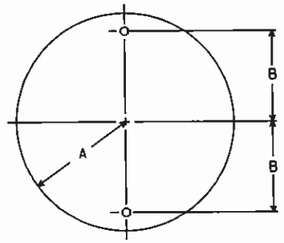

CIR-1-2

A	B	THICKNESS	AREA (FT²)
9	6	0.080	2.25
12	9	0.080	4.00
15	12	0.080	6.25
18	15	0.080	9.00

A	B	THICKNESS	AREA (m²)
225	150	2.0	0.20
300	225	2.0	0.36
375	300	2.0	0.56
450	375	2.0	0.81

01-19-07

SIGN BLANK DETAILS I

OFFICE OF TRAFFIC ENGINEERING

TC-52.10

1/1

RM-BHM

NOTES

1. For each detail shown, the top table is in inches and the bottom table is in millimeters unless otherwise noted.
2. All bolt holes shall be 3/8 inches (10mm) in diameter, and may be drilled or punched to finished size.
3. Dimensions between bolt holes shall be to tolerance of ± 1/32 inches (± 0.8 mm).
4. For back to back mounting of STOP and DO NOT ENTER sign, follow details shown on Standard Construction Drawing TC-41.50.

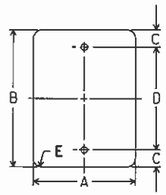

V-REC-1-2

A	B	C	D	E	THICKNESS	AREA (FT²)
6	54	9	36	1.5	0.080	2.25
9	12	1.5	9	1.5	0.080	0.75
10	12	1.5	10	1.5	0.080	0.83
12	15	1.5	12	1.5	0.080	1.25
12	16	1.5	13	1.5	0.080	1.33
12	18	1.5	15	1.5	0.080	1.50
12	24	3	18	1.5	0.080	2.00
12	30	3	24	1.5	0.080	2.50
12	36	3	30	1.5	0.080	3.00
12	48	6	36	1.5	0.080	4.00
14	48	6	36	1.5	0.080	4.67
18	24	3	18	1.5	0.080	3.00
18	60	6	48	1.5	0.100	7.50
24	30	3	24	1.5	0.080	5.00
24	36	3	30	1.5	0.080	6.00
24	38	3	32	1.5	0.080	6.33
24	42	6	30	1.5	0.080	7.00
24	48	6	36	1.5	0.100	8.00
30	36	3	30	1.875	0.080	7.50
30	42	6	30	1.875	0.080	8.75
30	48	6	36	1.875	0.100	10.00

A	B	C	D	E	THICKNESS	AREA (m²)
150	1350	225	900	40	2.0	0.20
225	300	37.5	225	40	2.0	0.07
250	300	37.5	250	40	2.0	0.08
300	375	37.5	300	40	2.0	0.11
300	400	37.5	325	40	2.0	0.12
300	450	37.5	375	40	2.0	0.14
300	600	75	450	40	2.0	0.18
300	750	75	600	40	2.0	0.23
300	900	75	750	40	2.0	0.27
300	1200	150	900	40	2.0	0.36
350	1200	150	900	40	2.0	0.42
450	600	75	450	40	2.0	0.27
450	1500	150	1200	40	2.5	0.68
600	750	75	600	40	2.0	0.45
600	900	75	750	40	2.0	0.54
600	950	75	800	40	2.0	0.57
600	1050	150	750	40	2.0	0.63
600	1200	150	900	40	2.5	0.72
750	900	75	750	50	2.0	0.68
750	1050	150	750	50	2.0	0.79
750	1200	150	900	50	2.5	0.90

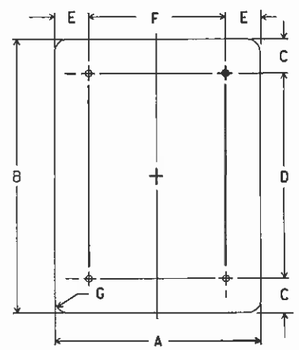

V-REC-2-4

A	B	C	D	E	F	G	THICKNESS	AREA (FT²)
36	42	6	30	6	24	2.25	0.080	10.50
36	48	6	36	6	24	2.25	0.100	12.00
36	54	6	42	6	24	2.25	0.100	13.50
36	60	6	48	6	24	2.25	0.100	15.00
36	72	12	48	6	24	2.25	0.100	18.00
36	75	13.5	48	6	24	2.25	0.100	18.75
42	60	6	48	9	24	2.25	0.100	17.50
48	60	6	48	9	30	3	0.100	20.00

A	B	C	D	E	F	G	THICKNESS	AREA (m²)
900	1050	150	750	150	600	60	2.0	0.95
900	1200	150	900	150	600	60	2.5	1.08
900	1350	150	1050	150	600	60	2.5	1.22
900	1500	150	1200	150	600	60	2.5	1.35
900	1800	300	1200	150	600	60	2.5	1.62
900	1875	338	1200	150	600	60	2.5	1.69
1050	1200	150	1200	225	600	60	2.5	1.26
1200	1500	150	1200	225	750	75	2.5	1.80

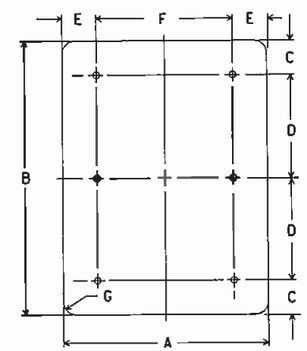

V-REC-2-6

A	B	C	D	E	F	G	THICKNESS	AREA (FT²)
48	72	6	30	9	30	3	0.100	24.00
48	76	8	30	9	30	3	0.100	25.33
48	84	12	30	9	30	3	0.100	28.00
48	96	12	36	9	30	3	0.100	32.00

A	B	C	D	E	F	G	THICKNESS	AREA (m²)
1200	1800	150	750	225	750	75	2.5	2.16
1200	1900	200	750	225	750	75	2.5	2.28
1200	2100	300	750	225	750	75	2.5	2.52
1200	2400	300	900	225	750	75	2.5	2.88

SHAPE — V-REC-2-4 — NO. BOLTS REQUIRED

NO. SUPPORTS REQUIRED

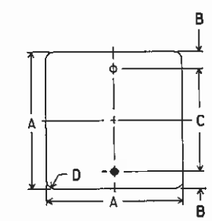

SQ-1-2

A	B	C	D	THICKNESS	AREA (FT²)
6	1.5	3	1.5	0.080	0.25
9	1.5	6	1.5	0.080	0.56
12	1.5	9	1.5	0.080	1.00
15	1.5	12	1.5	0.080	1.56
16	1.5	13	1.5	0.080	1.78
18	3	12	1.5	0.080	2.25
24	3	18	1.5	0.080	4.00
30	3	24	1.875	0.080	6.25
36	3	30	2.25	0.080	9.00

A	B	C	D	THICKNESS	AREA (m²)
150	37.5	75	40	2.0	0.02
225	37.5	150	40	2.0	0.05
300	37.5	225	40	2.0	0.09
375	37.5	300	40	2.0	0.14
400	37.5	325	40	2.0	0.16
450	75	300	40	2.0	0.20
600	75	450	40	2.0	0.36
750	75	600	50	2.0	0.56
900	75	750	60	2.0	0.81

01-19-07

SIGN BLANK DETAILS II

OFFICE OF TRAFFIC ENGINEERING

TC-52.20

1/2

RM-BHM

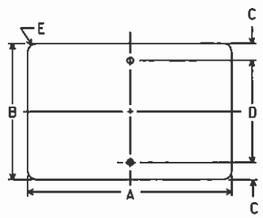

H-REC-1-2

A	B	C	D	E	THICKNESS	AREA (FT^2)
12	4	1	2	1.5	0.080	0.33
12	6	1.5	3	1.5	0.080	0.50
12	6.5	1.5	3.5	1.5	0.080	0.54
12	9	1.5	6	1.5	0.080	0.75
15	8	1.5	5	1.5	0.080	0.83
15	12	1.5	9	1.5	0.080	1.25
18	6	1.5	3	1.5	0.080	0.75
18	9	1.5	6	1.5	0.080	1.12
18	12	1.5	9	1.5	0.080	1.50
20	18	3	12	1.5	0.080	2.50
21	15	1.5	12	1.5	0.080	2.19
24	6	1.5	3	1.5	0.080	1.00
24	8	1.5	5	1.5	0.080	1.33
24	9	1.5	6	1.5	0.080	1.50
24	10	1.5	7	1.5	0.080	1.67
24	12	1.5	9	1.5	0.080	2.00
24	18	3	12	1.5	0.080	3.00
30	8	1.5	5	1.5	0.080	1.67
30	9	1.5	6	1.5	0.080	1.88
30	12	1.5	9	1.5	0.080	2.50
30	15	1.5	12	1.5	0.080	3.12
30	18	3	12	1.5	0.080	3.75
30	24	3	18	1.5	0.080	5.00
36	6	1.5	3	1.5	0.080	1.50
36	8	1.5	5	1.5	0.080	2.00
36	9	1.5	6	1.5	0.080	2.25
36	12	1.5	9	1.5	0.080	3.00
36	14	1.5	11	1.5	0.080	3.50
36	15	1.5	12	1.5	0.080	3.75
36	18	3	12	1.5	0.080	4.50
36	20	3	14	1.5	0.080	5.00
36	24	3	18	1.5	0.080	6.00
36	30	3	24	1.875	0.080	7.50
37.5	30	3	24	1.875	0.080	7.81
48	8	1.5	5	1.5	0.100	2.67
48	10	1.5	7	1.5	0.100	3.33
48	12	1.5	9	1.5	0.100	4.00
48	14	1.5	11	1.5	0.100	4.67
48	16	1.5	13	1.5	0.100	5.33
48	18	3	12	1.5	0.100	6.00

A	B	C	D	E	THICKNESS	AREA (m^2)
300	100	25	50	40	2.0	0.03
300	150	37.5	75	40	2.0	0.05
300	162	37.5	87	40	2.0	0.05
300	225	37.5	150	40	2.0	0.07
375	200	37.5	125	40	2.0	0.08
375	300	37.5	225	40	2.0	0.11
450	150	37.5	75	40	2.0	0.07
450	225	37.5	150	40	2.0	0.10
450	300	37.5	225	40	2.0	0.14
500	450	75	300	40	2.0	0.23
525	375	37.5	300	40	2.0	0.20
600	150	37.5	75	40	2.0	0.09
600	200	37.5	125	40	2.0	0.12
600	225	37.5	150	40	2.0	0.14
600	250	37.5	175	40	2.0	0.15
600	300	37.5	225	40	2.0	0.18
600	450	75	300	40	2.0	0.27
750	200	37.5	125	40	2.0	0.15
750	225	37.5	150	40	2.0	0.17
750	300	37.5	225	40	2.0	0.23
750	375	37.5	300	40	2.0	0.28
750	450	75	300	40	2.0	0.34
750	600	75	450	40	2.0	0.45
900	150	37.5	75	40	2.0	0.14
900	200	37.5	125	40	2.0	0.18
900	225	37.5	150	40	2.0	0.20
900	300	37.5	225	40	2.0	0.27
900	350	37.5	275	40	2.0	0.32
900	375	37.5	300	40	2.0	0.34
900	450	75	300	40	2.0	0.41
900	500	75	350	40	2.0	0.45
900	600	75	450	40	2.0	0.54
900	750	75	600	50	2.0	0.68
938	750	75	600	50	2.0	0.70
1200	200	37.5	125	40	2.5	0.24
1200	250	37.5	175	40	2.5	0.30
1200	300	37.5	225	40	2.5	0.36
1200	350	37.5	275	40	2.5	0.42
1200	400	37.5	325	40	2.5	0.48
1200	450	75	300	40	2.5	0.54

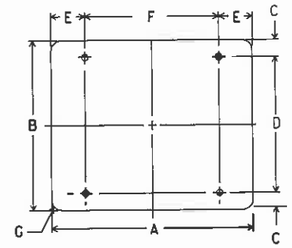

H-REC-2-4

A	B	C	D	E	F	G	THICKNESS	AREA (FT^2)
40	20	3	14	6	28	1.5	0.080	5.56
42	24	3	18	9	24	1.5	0.080	7.00
42	30	3	24	9	24	1.875	0.080	8.75
42	36	6	24	9	24	2.25	0.080	10.50
45	36	6	24	9	27	2.25	0.080	11.25
48	20	3	14	9	30	1.5	0.100	6.67
48	24	3	18	9	30	1.5	0.100	8.00
48	30	3	24	9	30	1.875	0.100	10.00
48	36	6	24	9	30	2.25	0.100	12.00
48	42	6	30	9	30	2.25	0.100	14.00
54	30	3	24	9	36	1.875	0.100	11.25
54	36	6	24	9	36	2.25	0.100	13.50
60	12	1.5	9	12	36	1.5	0.100	5.00
60	18	3	12	12	36	1.5	0.100	7.50
60	24	3	18	12	36	1.5	0.100	10.00
60	30	3	24	12	36	1.875	0.100	12.50
60	36	6	24	12	36	2.25	0.100	15.00
60	48	6	36	12	36	3	0.100	20.00
66	24	3	18	12	42	1.5	0.100	11.00
66	36	6	24	12	42	2.25	0.100	16.50
72	12	1.5	9	12	48	1.5	0.125	6.00
72	15	1.5	12	12	48	1.5	0.125	7.50
72	24	3	18	12	48	1.5	0.125	12.00
72	36	6	24	12	48	2.25	0.125	18.00
72	48	6	36	12	48	3	0.125	24.00
78	24	3	18	12	54	1.5	0.125	13.00

A	B	C	D	E	F	G	THICKNESS	AREA (m^2)
1000	500	75	350	150	700	40	2.0	0.50
1050	600	75	450	225	600	40	2.0	0.63
1050	750	75	600	225	600	50	2.0	0.79
1050	900	150	600	225	600	60	2.0	0.95
1125	900	150	600	225	675	60	2.0	1.01
1200	500	75	350	225	750	40	2.0	0.60
1200	600	75	450	225	750	40	2.5	0.72
1200	750	75	600	225	750	50	2.5	0.90
1200	900	150	600	225	750	60	2.5	1.08
1200	1050	150	750	225	750	60	2.5	1.26
1350	750	75	600	225	900	50	2.5	1.01
1350	900	150	600	225	900	60	2.5	1.22
1500	300	37.5	225	300	900	40	2.5	0.45
1500	450	75	300	300	900	40	2.5	0.68
1500	600	75	450	300	900	40	2.5	0.90
1500	750	75	600	300	900	50	2.5	1.13
1500	900	150	600	300	900	60	2.5	1.35
1500	1200	150	900	300	900	70	2.5	1.80
1650	600	75	450	300	1050	40	2.5	0.99
1650	900	150	600	300	1050	60	2.5	1.49
1800	300	37.5	225	300	1200	40	3.1	0.54
1800	375	37.5	300	300	1200	40	3.1	0.68
1800	600	75	450	300	1200	40	3.1	1.08
1800	900	150	600	300	1200	60	3.1	1.62
1800	1200	150	900	300	1200	70	3.1	2.16
1950	600	75	450	300	1350	40	3.1	1.17

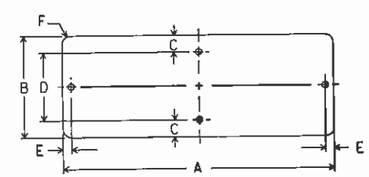

H-REC-1-4 (ONE WAY)

A	B	C	D	E	F	THICKNESS	AREA (FT^2)
36	12	1.5	9	1	1.5	0.080	3.00
54	18	3	12	1.5	1.5	0.100	6.75

A	B	C	D	E	F	THICKNESS	AREA (m^2)
900	300	37.5	225	25	40	2.0	0.27
1350	450	75	300	37.5	40	2.5	0.61

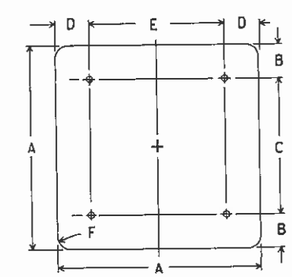

SQ-2-4

A	B	C	D	E	F	THICKNESS	AREA (FT^2)
36	6	24	6	24	2.25	0.080	9.00
42	6	30	9	24	2.25	0.080	12.25
48	6	36	9	30	3	0.100	16.00

A	B	C	D	E	F	THICKNESS	AREA (m^2)
900	150	600	150	600	60	2.0	0.81
1050	150	750	225	600	60	2.0	1.10
1200	150	900	225	750	75	2.5	1.44

NOTES

1. For each detail shown, the top (or left) table is in inches and the bottom (or right) table is in millimeters unless otherwise noted.
2. All bolt holes shall be 3/8 inches (10mm) in diameter, and may be drilled or punched to finished size.
3. Dimensions between bolt holes shall be to tolerance of ± 1/32 inches (± 0.8 mm).
4. For back to back mounting of STOP and DO NOT ENTER sign, follow details shown on Standard Construction Drawing TC-41.50.

SHAPE — NO. BOLTS REQUIRED
H-REC-2-4
NO. SUPPORTS REQUIRED

01-19-07

SIGN BLANK DETAILS II

OFFICE OF TRAFFIC ENGINEERING

TC-52.20

2/2

RM-BHM

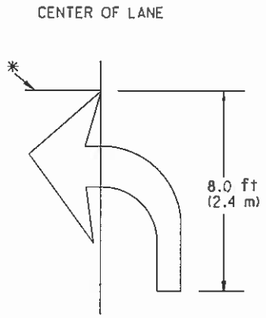

TURN ARROW

(RIGHT ARROW OPPOSITE)

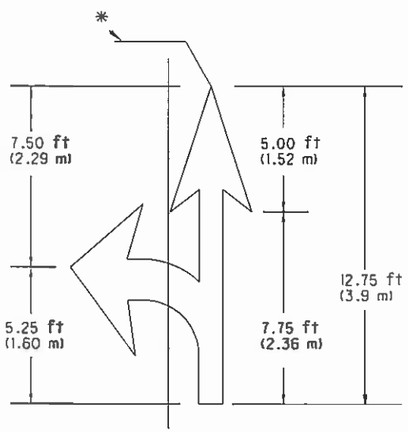

TURN AND THROUGH ARROW

(THREE-HEADED DIRECTIONAL ARROWS CAN BE ACHIEVED BY THE COMBINATION OF TURN ARROWS.)

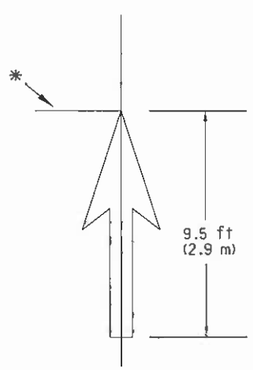

THROUGH ARROW

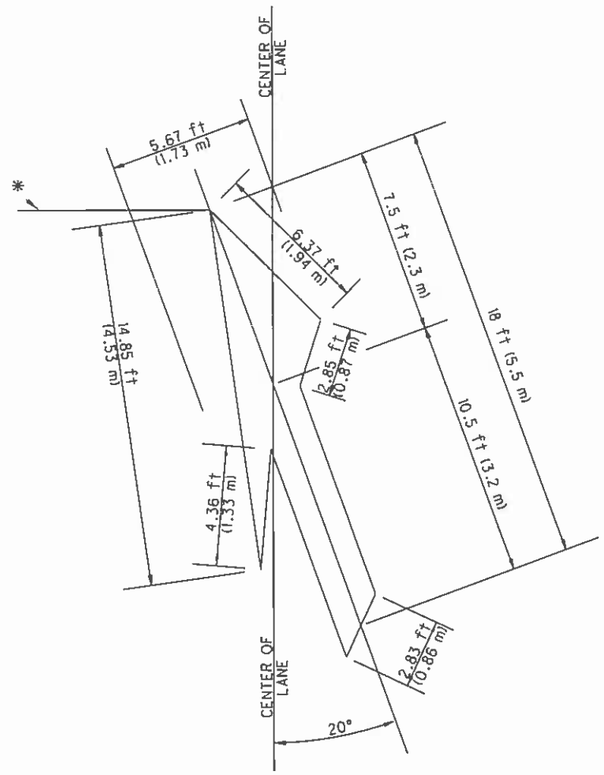

LANE-REDUCTION ARROW

(FOR LEFT LANE, USE MIRROR IMAGE)

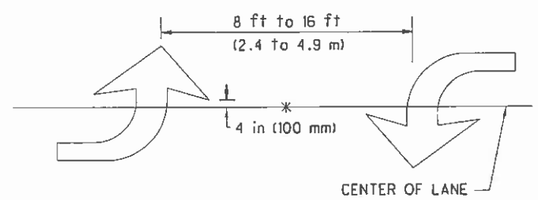

TWO-WAY LEFT-TURN ARROWS

(SEE NOTE 6)

TABLE 1

LANE-USE ARROWS		
ARROW TYPE	SIZE ft (m)	AREA sq ft (sq m)
Turn Arrow	8.0 (2.4)	17 (1.6)
Through Arrow	9.5 (2.9)	13 (1.2)
Turn and Through Arrow	12.75 (3.9)	28 (2.6)
Lane-Reduction Arrow	18.0 (5.5)	46 (4.2)

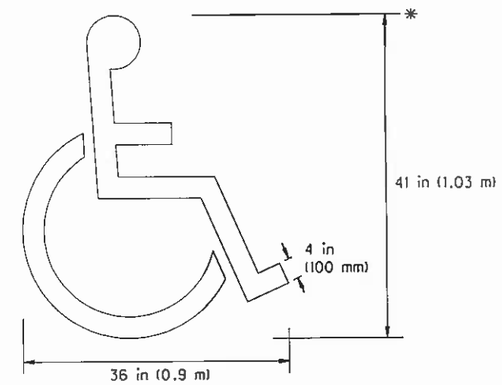

HANDICAP SYMBOL MARKING

TABLE 2

HANDICAP AND BIKE SYMBOL MARKINGS			
HEIGHT	HEIGHT in (m)	WIDTH in (m)	AREA sq ft (sq m)
HANDICAP SYMBOL	41 (1.03)	36 (0.9)	2.7 (0.3)
BIKE SYMBOL	72 (1.80)	40 (1.0)	16 (1.5)

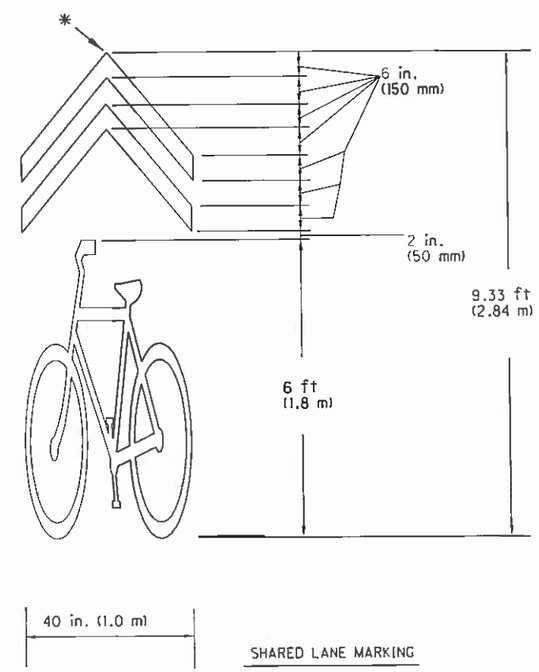

SHARED LANE MARKING

(SEE NOTE 7)

* - INDICATES STATION REFERENCE POINT

01-21-11

WORD AND SYMBOL PAVEMENT MARKINGS

OFFICE OF TRAFFIC ENGINEERING

TC-71.10

SHB

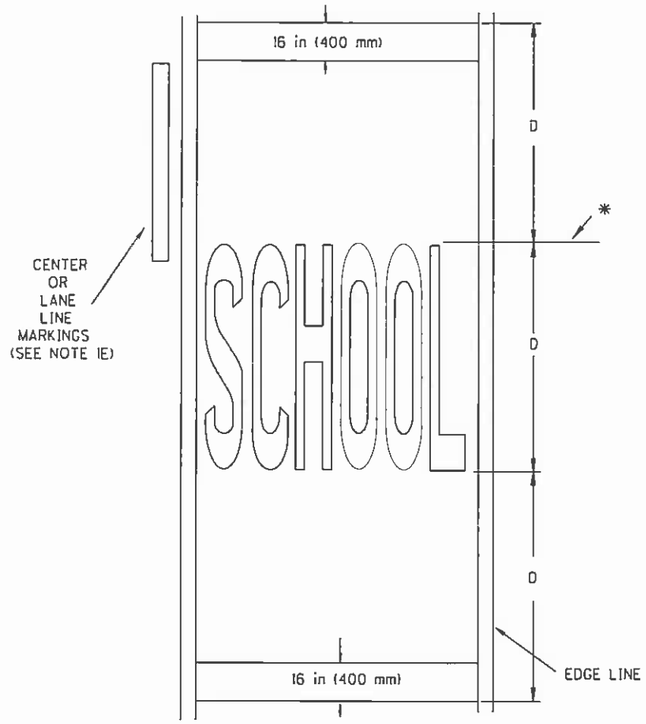

SCHOOL SYMBOL MARKING

(SEE NOTE 1)

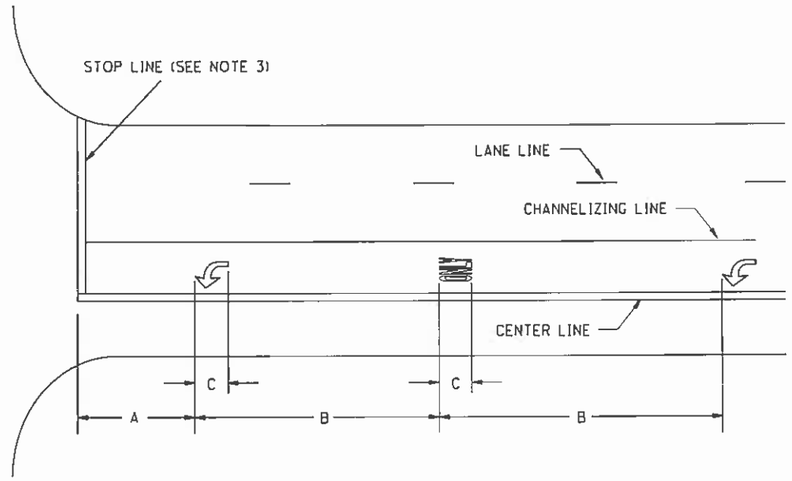

TABLE 4

LANE USE MARKINGS			
ROADWAY TYPE	DIMENSIONS feet (m)		
	A (min.)	B	C
RURAL	30 (9)	88 (27)	8 (2.4)
URBAN	10 (3)	66 (20)	6 (1.8)

(SEE NOTE 5)

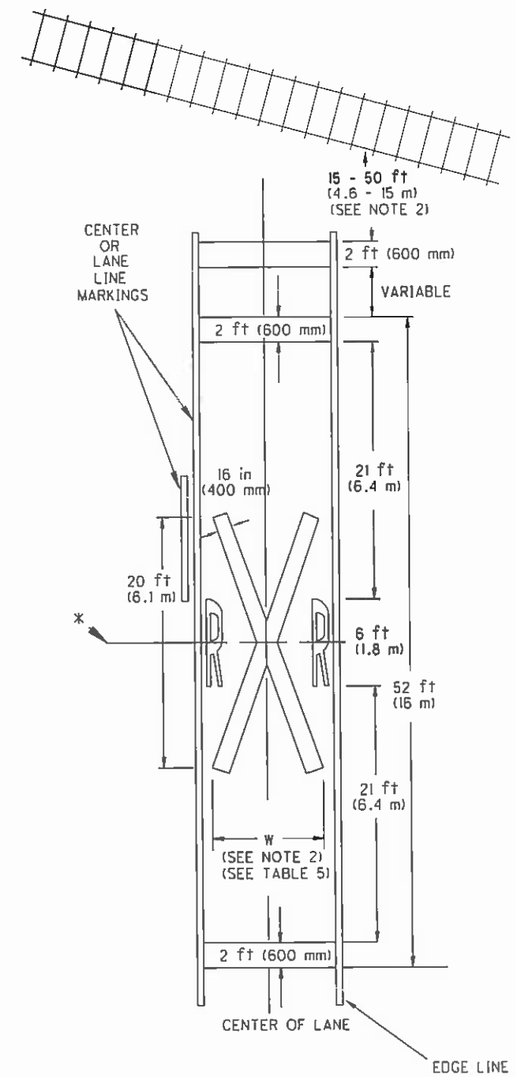

RAILROAD SYMBOL MARKING

(SEE NOTE 2)

ONLY WORD MARKING
(SEE NOTE 4)

TABLE 3

WORDS square ft (square m)			
TYPE	HEIGHT		
	URBAN	RURAL	MULTI-LANE
	6 ft (1.8 m)	8 ft (2.4 m)	10 ft (3.0 m)
ONLY (C)	17 (1.6)	23 (2.1)	N/A
SCHOOL (D)	27 (2.5)	37 (3.4)	90 (8.4)

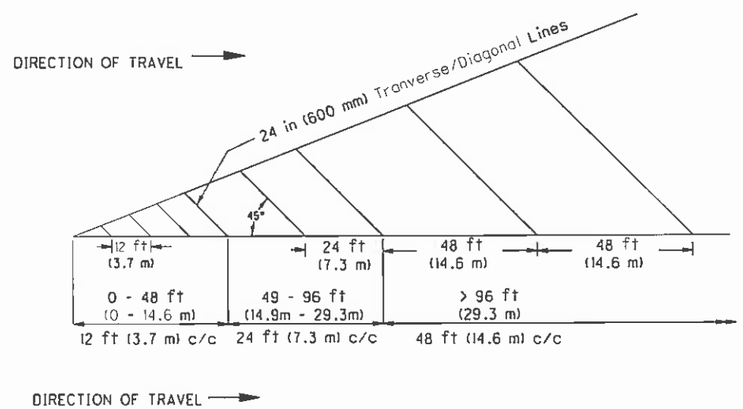

TYPICAL ISLAND DETAIL TO SPACE TRANSVERSE/DIAGONAL LINES

* - INDICATES STATION REFERENCE POINT

TABLE 5

R X R SYMBOL						
W R X R	WIDTH (W)	8 ft (2.4 m)	9 ft (2.7 m)	10 ft (3.0 m)	11 ft (3.3 m)	12 ft (3.6 m)
	AREA square ft (square m)	67 (6.2)	68 (6.3)	70 (6.5)	71 (6.6)	72 (6.7)

01-21-11

WORD AND SYMBOL PAVEMENT MARKINGS

OFFICE OF TRAFFIC ENGINEERING

TC-71.10

SHB

GENERAL NOTES:

1. SCHOOL Marking

1A. The SCHOOL markings shall be installed on all paved approaches in advance of all School Zones.

1B. The SCHOOL markings should be placed at least 100 feet (30 meters) in advance of the School Zone. The preferred placement of the SCHOOL marking is adjacent to the School Zone Advance sign.

1C. On two-way, two-lane highways the following shall apply:
1) When the approach lane to the School Zone is 11 feet (3.3 meters) or more in width;
a) The SCHOOL word marking and transverse lines shall be contained in, and centered in, the lane.
b) The character height shall be 6 feet (1.8 meters) for urban areas and 8 feet (2.4 meters) for rural areas.
2) When the approach lane to the School Zone is less than 11 feet (3.3 meters) in width;
a) One installation of the SCHOOL word marking and transverse lines shall extend across both lanes of traffic
b) The characters shall be 10 feet (3.0 meters) in height.

1D. On multi-lane approaches the following shall apply:
1) When the approach lanes to the School Zone are 11 feet (3.3 meters) or more in width;
a) The SCHOOL word marking and transverse lines shall be contained in, and centered in, each lane.
b) The character height shall be 6 feet (1.8 meters) for urban areas and 8 feet (2.4 meters) for rural areas.
2) When the approach lanes to the School Zone are less than 11 feet (3.3 meters) in width;
a) One installation of the SCHOOL word marking shall extend to the width of two approach lanes.
b) Transverse lines shall extend across all approach lanes of traffic.
c) The characters shall be 10 feet (3.0 meters) in height.

1E. Center or lane lines shall not pass through the SCHOOL word marking.

1F. 6 foot (1.8 meter) and 8 foot (2.4 meter) high SCHOOL Symbol marking shall be marked with 4 inch (100 millilmeter) strokes.
10 foot (3.0 meter) high SCHOOL Symbol marking shall be marked with 8 inch (200 millimeter) strokes.

1G. The area of the transverse lines varies with the width of the pavement; therefore the area must be added to the value in Table 3, on Sheet 2.

2. Railroad Crossing Markings

2A. On multi-lane approaches, markings shall be as follows:
a) The RXR symbol shall be placed in each approach lane.
b) Transverse lines used with the railroad symbols shall extend across all approach lanes.

2B. The railroad symbol should be located so that the W10-1, Railroad Advance Warning sign, is within the two transverse boundary lines of the railroad symbol.

2C. The stop line shall be located for best sight distance between 15 to 50 feet (4.6 to 15 meters) of the near edge of the tracks.

2D. The stop line shall be approximately 8 feet (2.4 meters) from a gate (if present).

2E. Width (W) of the "X" will vary according to the lane width.

2F. The height of the "R" shall be set at 6 feet (1.8 meters).

2G. The area of the transverse lines and stop lines varies with the width of the pavement; therefore the area must be added to the value in Table 5 on Sheet 2.

3. Stop Line Marking

3A. Except as specified in notes 3B and 3C, the stop line should be placed as follows:
a) The stop line should be placed where cross-corner vision is maximum.
b) In no case shall the stop line be placed more than 30 feet (9 meters) or less than 4 feet (1.2 meters) from the nearest edge of the intersecting roadway.
c) For normal intersections the maximum distance should be 10 feet (3 meters).

3B. If a marked crosswalk is present the stop line should be placed 4 feet (1.2 meters) in advance of, and parallel to, the nearest crosswalk line.

3C. For signalized intersections the stop line should be placed at a minimum distance of 40 feet (12.2 meters) from the nearest signal head.

4. ONLY Word Marking

4A. The ONLY word marking is optional.

4B. Where used, the spacing between ONLY and arrow markings should be based on Table 4, as shown on Sheet 2.

4C. When lane-use arrow markings are used and the ONLY marking is not, an additional lane-use arrow should be used in its place to retain the spacing, as shown in Table 4 on Sheet 2.

5. Lane-use Arrow Markings

5A. Lane-use arrow markings are optional except where a through traffic lane(s) approaching an intersection becomes a mandatory turn lane(s).

5B. Where used, the spacing between markings should be based on Table 4, as shown on Sheet 2 of 3. However, based on the turn lane length, the spacing between the markings may be adjusted.

6. Two-Way Left-Turn Only Arrows (TWLTO)

6A. Arrow sets should be longitudinally spaced at intervals of:
1) 500 to 1000 feet (150 to 300 meters) for speeds less than or equal to 40 mph (65 km/hr)
2) 1000 to 1500 feet (300 to 450 meters) for speeds over 40 mph (65 km/hr)

6B. In addition, an arrow set should be placed
1) 100 to 200 feet (30 to 60 meters) from the near edge of an intersecting roadway
or
2) Inside both ends of TWLTO lanes

7. Shared Lane Marking

The area of the chevron markings must be added to the value of the bike symbol markings in Table 2 on sheet 1.

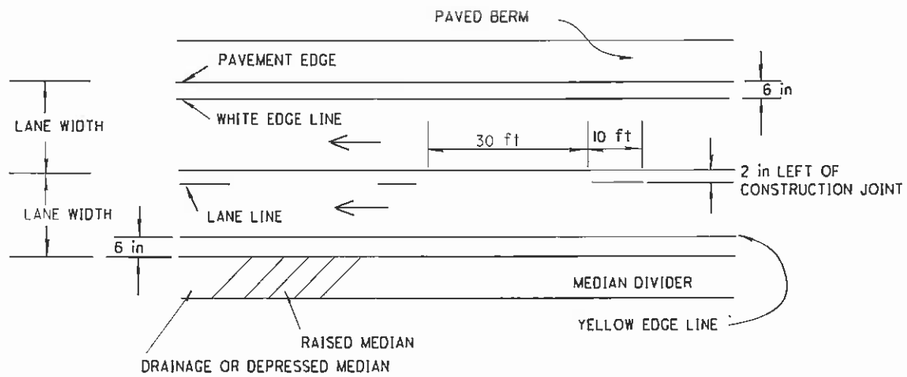

FREEWAY & EXPRESSWAY MAINLINE MARKINGS

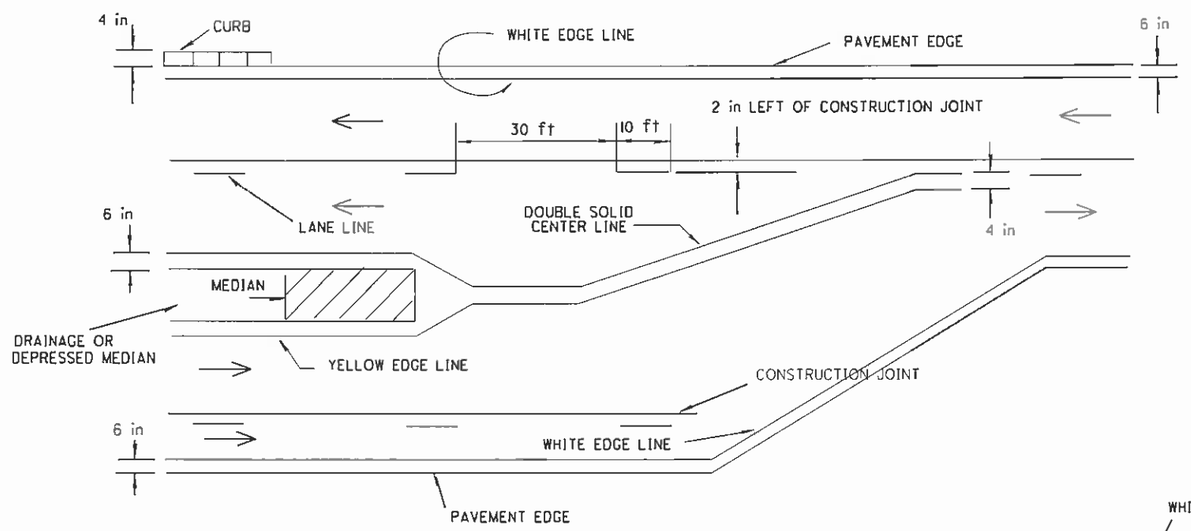

MULTI-LANE DIVIDED & UNDIVIDED HIGHWAY MARKINGS

NOTES

1. The distance from the pavement edge to the nearside edge of the edge line may be increased with the approval of the Engineer in order to maintain uniform lane width.
2. See Standard Construction Drawing TC-72.20 for entrance and exit ramp markings.
3. The cycle length for dashed lines shall be 40 foot plus or minus 6 inches. The minimum length of dash shall be sufficiently long to maintain a 3:1 ratio between length of gap and length of dash.
4. Edge line transitions shall be marked at the same time as the adjoining edge lines.

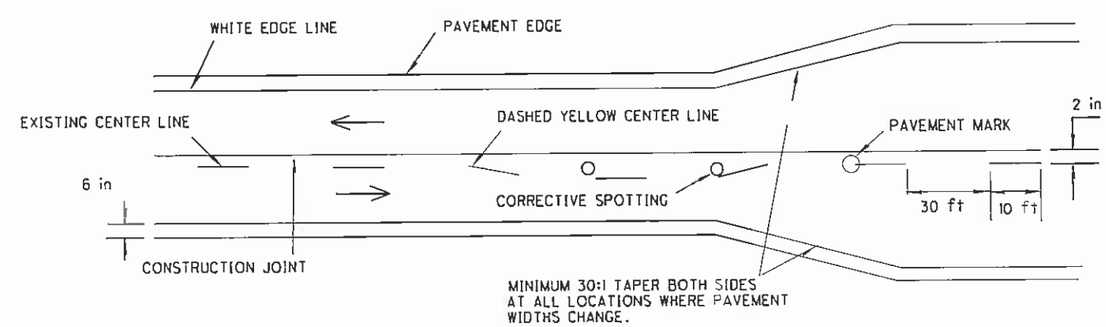

TWO LANE MARKINGS

04-20-12

PAVEMENT MARKING DETAILS

OFFICE OF TRAFFIC ENGINEERING

TC-73.10

1/1

JAM

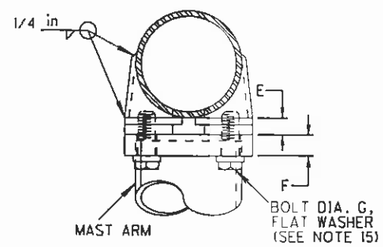

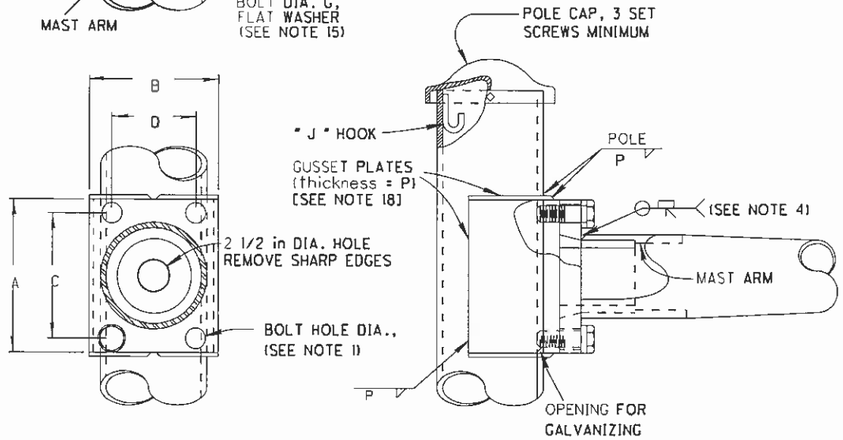

ARM ATTACHMENT (TYP.)

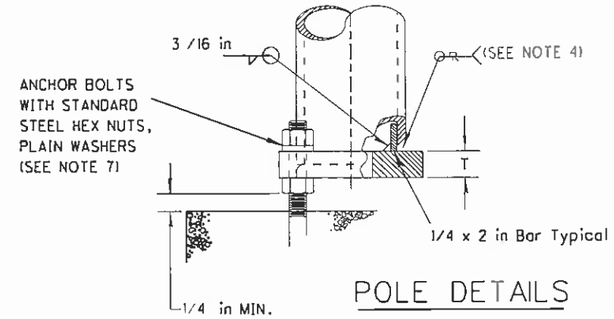

POLE DETAILS

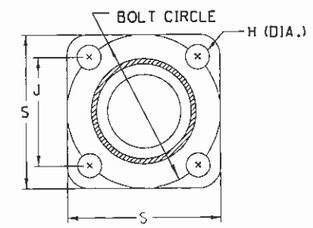

BASE PLATE

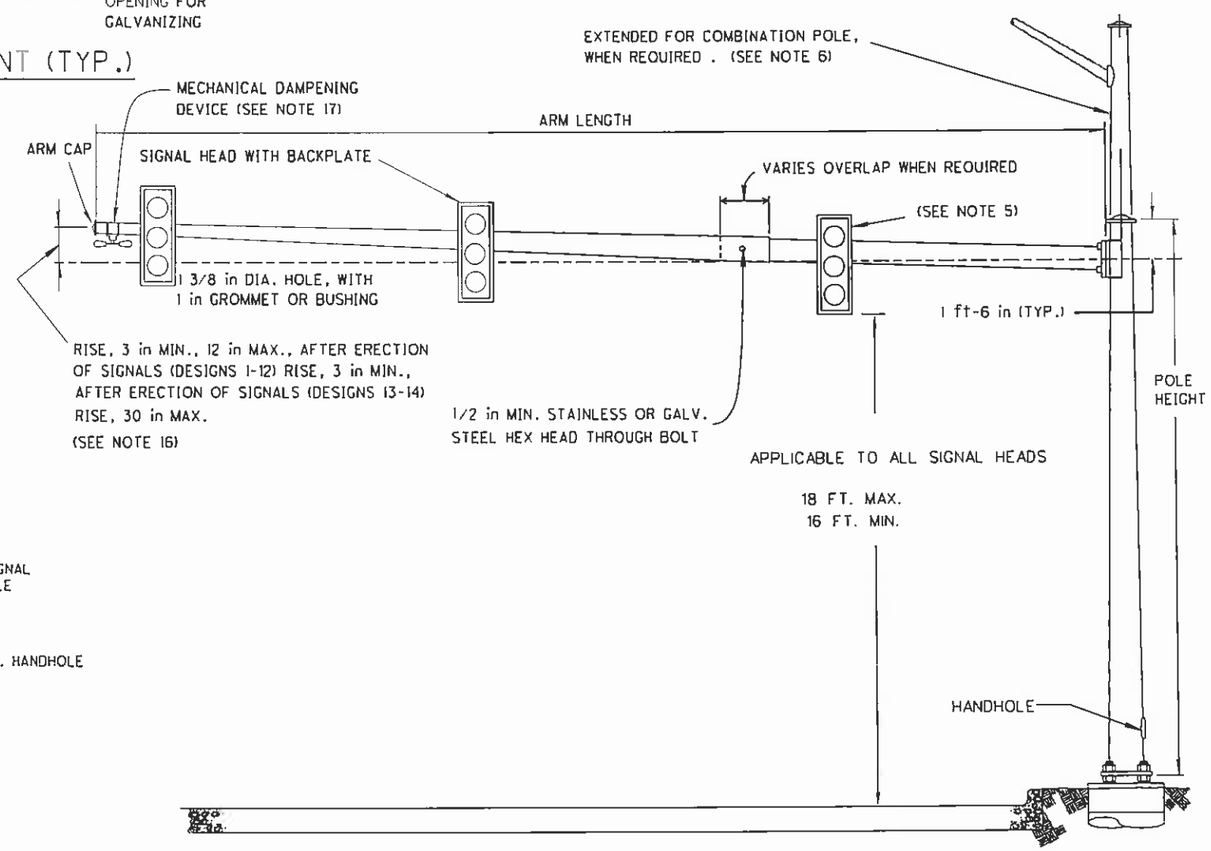

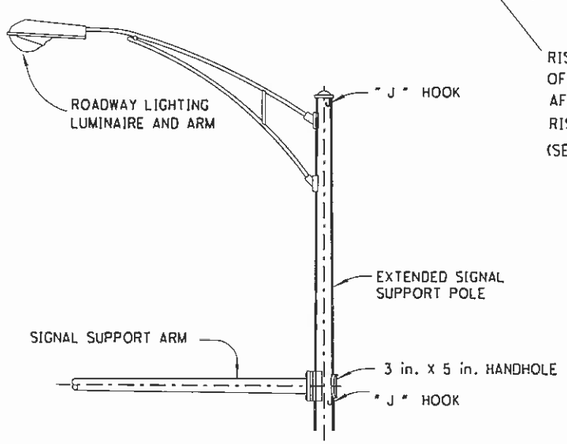

POLE EXTENSION FOR

LIGHTING LUMINAIRE

NOTES

1. Arm plate hole diameter shall be bolt diameter plus 1 /8 inch. Pole plate tapped hole shall have threads with 75% (min.) full profile height. Threads may be retapped after galvanizing.
2. For sign mounting details, see Standard Construction Drawings TC-16.21 and TC-41.41.
3. For foundation details, see Standard Construction Drawing TC-21.20.
4. The arm attachment plate shall be welded using a full penetration weld. The pole attachment to the base plate shall be welded using a full penetration weld.
5. For signal attachment details, see Standard Construction Drawing TC-85.20.
6. For modification of pole to support roadway lighting, see Standard Construction Drawing HL-10.12.
7. A minimum of one bolt thread shall remain above the anchor nut.
8. All unused couplings shall be provided with a removable galvanized cast iron plug.
9. For pole and base plate dimensions, see sheet 2.
10. The wire entrance port of the signal head may be oriented in any direction to keep the cable drip loop from rubbing on the signal head. The signal head shall hang level and plumb.
11. For construction details and location of handholes, see Standard Construction Drawing TC-22.10.
12. The design loads were calculated as the equivalent amount of signal area that could be carried at the end of the arm.
13. The design loads were developed without applying galloping fatigue loads. Also, the stress requirements of Note b, Table 11-2 in the AASHTO code were not applied.
14. These structures should be inspected for excessive wind induced deflection in the vertical direction. If found, a damping plate should be placed on the arm.
15. Connection bolts shall be ASTM A325 for diameters 1.50 inch and smaller. Larger bolts shall be ASTM A449. Designs 1 through 12 shall use ASTM F436 flat washers Design 13 shall use ASTM F959 DTI washers. Design 14 shall use ASTM F2437 Type 2 Grade 5 DTI washers.
16. Negative arm end slope is acceptable to achieve rise requirement.
17. An approved mechanical damping device shall be installed as close as possible to the end of the arm. Required on arms over 59 feet in length. Install on arms 59 feet or less if directed by the plans or the engineer. Flat plate dampers shall only be used for new construction if directed by the plans or the Engineer.
18. Ring-stiffened wrap-around horizontal plates are permitted as an alternative shown to the horizontal plates shown.

7-20-12

SINGLE ARM
OVERHEAD SIGNAL SUPPORT

OFFICE OF TRAFFIC
ENGINEERING

TC-81.21

These designs use full penetration welds at the arm and base plate connections.

NOTES

1. Maximum design area is based on 90 MPH design wind speed with a pressure of 25 PSF.

ENGLISH UNITS

All dimensions are in inches, unless otherwise noted.

DESIGN NO.	MAXIMUM DESIGN AREA SQ FT (NOTE 1)	DESIGN DISTANCE FROM CL FT	POLE		ARM		TWO PIECE ARM		ARM ATTACHMENT								ANCHOR BASE					ANCHOR BOLT	
			WALL THICK	SIZE	WALL THICK	SIZE	WALL THICK	SIZE	A	B	C	D	E	F	G	P	BOLT CIRCLE	S	J	T	H	DIA.	L
1	26	24.5	.179	10X6.78X23 ft	.179	7X3.50X25 ft			14.50	12	10.50	8	1.25	1.25	1.25	0.25	13.50	14.13	9.56	1.50	1.75	1.50	54
2	25	31.5	.179	11X7.78X23 ft	.179	8X3.52X32 ft			14.50	12	10.50	8	1.25	1.50	1.25	0.25	15	15.63	10.63	1.50	1.75	1.50	54
3	25	37.5	.179	12X8.78X23 ft	.179	9X3.68X38 ft			14.50	12	10.50	8	1.25	1.50	1.25	0.25	16	17	11.31	1.50	1.75	1.50	54
4	42	37.5	.239	13X9.78X23 ft	.239	10.32X5.00X38 ft			16.50	14.50	12.50	9.50	1.50	2	1.25	0.25	18	18.50	12.75	2	2.13	1.75	84
11	40	44.5	.239	14X10.78X23 ft	TOT. LENGTH = 45 ft		.239 .179	11X8.62X17 ft + 9.19X5.10X29 ft-3 in	16.50	14.50	12.50	9.50	1.50	2	1.25	0.31	20	20.50	14.13	2	2.13	1.75	84
12	42	47.5	.299	14X10.78X23 ft	TOT. LENGTH = 48 ft		.299 .179	11X8.62X17 ft + 9.19X4.68X32 ft-3 in	16.50	14.50	12.50	9.50	1.75	2	1.50	0.31	20	20.50	14.13	2	2.38	2	90
13	40	59.5	.299	16X12.78X23 ft	TOT. LENGTH = 60 ft		.299 .239	13X8.80X30 ft + 9.62X5.14X32 ft	19.50	16.50	15	12	1.50	2	1.50	0.31	22	23	15.56	2	2.38	2	90
14	38	69.5	.299	17X13.78X23 ft	TOT. LENGTH = 70 ft		.3125 .239	14X9.1X35 ft + 9.60X4.42X37 ft	19.50	16.50	15	12	2.00	2	2.00	0.38	22	23	15.56	2	2.38	2	90

7-20-12

SINGLE ARM
OVERHEAD SIGNAL SUPPORT

OFFICE OF TRAFFIC ENGINEERING

TC-81.21

CABINET HEIGHT A	MOUNTING HEIGHT B
LESS THAN 36 in (900mm)	30 in ± 3 in (760mm 75mm)
36 in (900mm) AND OVER	23 in ± 3 in (580mm 75mm)

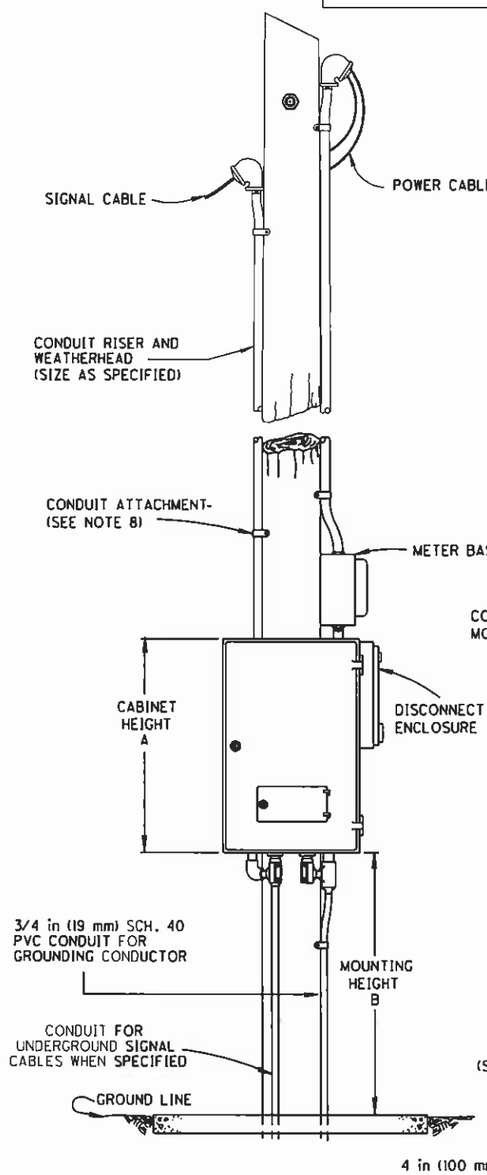

POWER SERVICE AND CONTROLLER

MOUNTING ON WOOD POLES

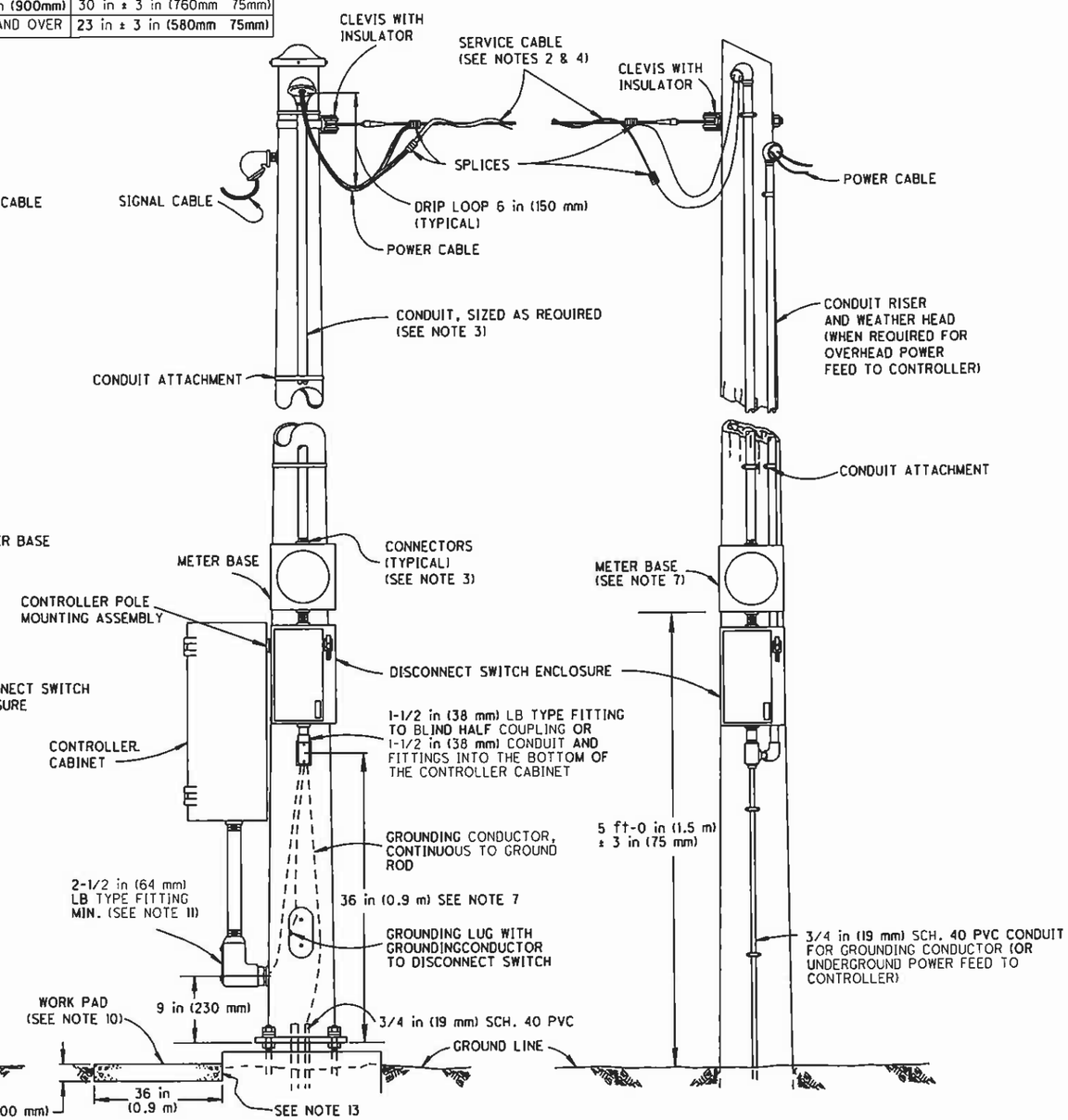

POWER SERVICE AND CONTROLLER

MOUNTING ON NEW STEEL POLES

(SEE NOTE 6)

POWER SERVICE

NOTES

1. All conduit fitting entries for controllers and power service equipment in proposed steel poles shall be attached by a blind half coupling welded into the pole prior to galvanizing.
2. Service cable attachment on wood poles shall be by a 5/8 inch (16 mm) thru-bolt and clevis; on steel poles by a banded clevis.
3. If both the meter and disconnect switch are not required on a steel pole, the power cable shall enter the controller through a conduit riser, external to the pole.
4. The service cable and cable splices to the power cable for the incoming power supply shall be installed by the power supplying agency unless otherwise specified. The pole attachment hardware shall be furnished and installed by the Contractor.
5. Orientation of the cabinet, meter and disconnect switch enclosure shall be arranged to minimize exposure to the street side and also minimize encroachment on sidewalks, unless otherwise shown on the plans.
6. Power and controller service added to existing steel poles shall be similar to that shown for the wood pole with the exception of the attachment hardware.
7. The top of the meter base shall not exceed 6 feet (1.8 m) above the ground. The mounting height of the LB type fitting may be decreased in order to accomodate a larger meter base.
8. Conduit attachment shall be by means of two hole conduit straps with a maximum spacing of 5 feet (1.5 m) minimum fastener requirements are as follows: wood poles- 1/4 x 3 inch (6.4 x 76 mm) long lag screws, No. 14 X 3 inch (76 mm) long round head screws, or 20d spikes; steel poles- 1/4 inch (6.4 mm) screws, self tapping or with drilled and tapped hole, in lieu of conduit clamps, 3/4 inch (19 mm) wide passivated stainless steel banding may be used on steel poles.
9. Conduit connections at the top and bottom of the disconnect switch enclosure and meter base shall be watertight and shall use the hubs listed on the enclosure and meter base U. L. labels. Conduit shall be bent to allow the conduit to enter straight into the enclosure or meter base, and to provide space for the weatherhead when the riser is pulled tight against the pole.
10. A 48 inch x 36 inch x 4 inch (1.2 m x 0.9 m x100 mm) work pad shall be located below each pole mounted controller cabinet unless located in an otherwise paved area. When required, this item shall be paid for under item 633, controller work pads. In level areas, the top of the pad shall be 1 inch (25 mm) above the ground line. In steeply sloped areas, the pad's location shall be adjusted to provide access and drainage while complying with the required controller cabinet mounting height.
11. The horizontal orientation of the handhole relative to the 2-1/2 inch (64 mm) blind half coupling for the controller shall be as required by the plans except they shall not be closer than 90°. Install LB fitting before erecting pole.
12. When conduit risers are required to be attached to utility company wood poles, and the utility company's policy requires non-metallic conduit. The conduit risers shall conform with Nema standards publication No. TC-2 for PVC conduit type EPC-40.
13. 1/2 inch (13 mm) preformed joint filler as per 705.03 shall be used between foundations and adjacent paved areas.

01-19-07

POLE MOUNTINGS FOR CONTROLLERS AND POWER SERVICE

OFFICE OF TRAFFIC ENGINEERING

TC-83.10

1/1

RM-BHM

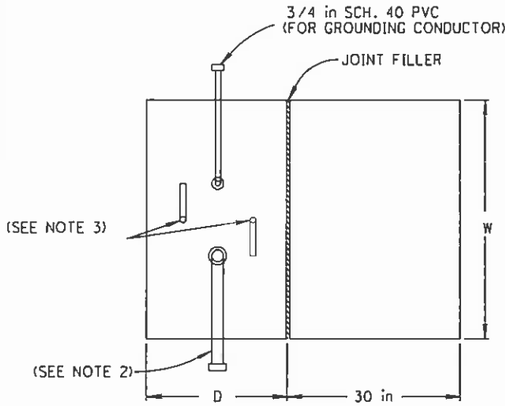

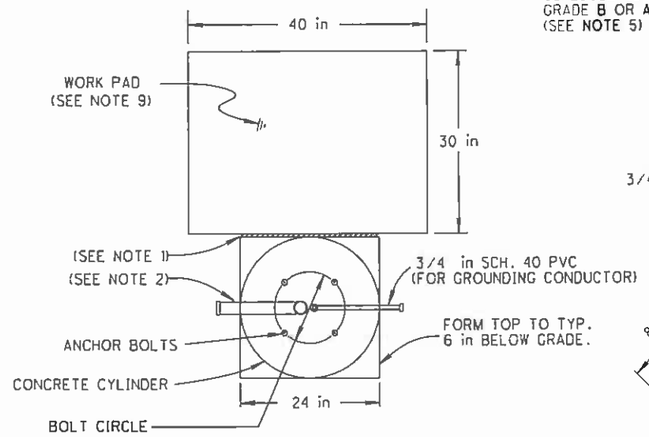

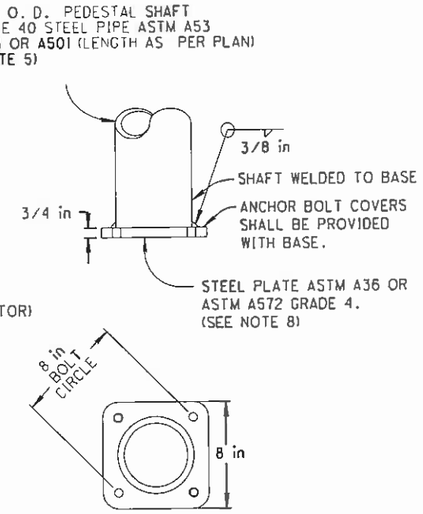

PLATE PEDESTAL BASE

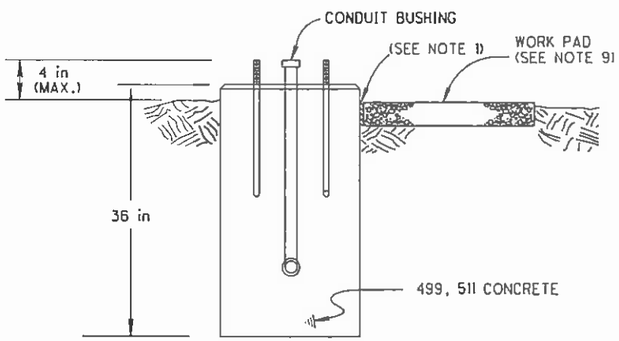

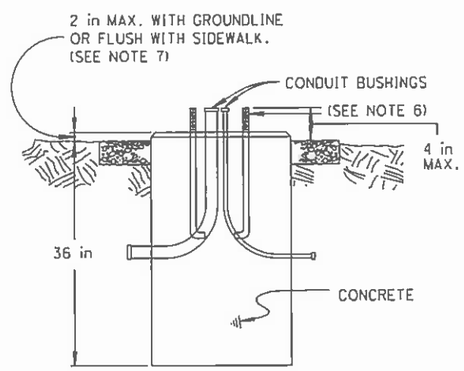

PEDESTAL FOUNDATION

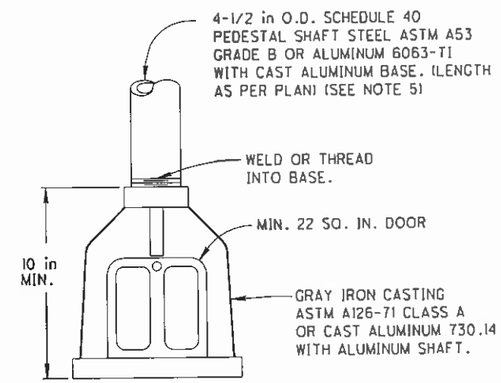

TYPE	W	D	FOUNDATION CONCRETE	WORK PAD
1	40 in	24 in	0.82 C.Y.	0.96 S.Y.
2	50 in	36 in	1.54 C.Y.	1.24 S.Y.

GROUND MOUNTED NEMA

CABINET FOUNDATION

FOUNDATION CONCRETE	WORK PAD
0.42 C.Y.	0.96 S.Y.

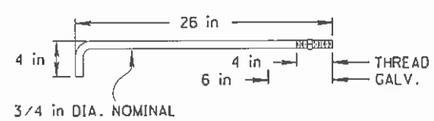

PEDESTAL ANCHOR BOLT

ASTM A307 STEEL

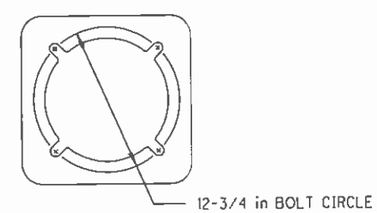

TRANSFORMER TYPE

PEDESTAL BASE

NOTES

1. 1/2 inch preformed joint filler as per 705.03 shall be used between foundations and adjacent paved areas.
2. The size, number and orientation of conduit ells shall be as shown in the plan, except that an 3/4 inch Schedule 40 PVC shall be installed in each foundation.
3. The size, number and location of anchor bolts shall be in accordance with the manufacturer's recommendations.
4. All pedestals shall be provided with a method of securely attaching a 4 AWG insulated copper grounding conductor to the pedestal or anchor bolt. No cables or connections shall be external to the pedestal.
5. The pedestal shaft length as shown in the plans includes the pedestal base height for either base design.
6. The pedestal base shall set on the foundation top without grouting, preformed fillers or leveling nuts under the base. Steel shims may be used under the base for leveling the installation.
7. The foundation area of contact with the pedestal base shall be level. If adjacent paved areas slope, the remainder of the foundation top shall be beveled to meet the adjacent elevations.
8. A cast steel anchor base of equivalent strength may be used in lieu of the plate base.
9. A 4 inch thick work pad shall be provided unless in an otherwise paved area. When required, this item shall be paid for under Item 633 Controller Work Pad. In level areas the top of the pad shall be 1 inch above the ground line. In steeply sloped areas the pad's location shall be adjusted to provide access and drainage.
10. Ground mounted controller cabinets shall be sealed to the foundation with a flexible weatherproof clear, silicon caulking compound.

04-20-12

CABINET FOUNDATIONS AND PEDESTALS

OFFICE OF TRAFFIC ENGINEERING

TC-83.20

1/2

LM

332/336 CABINET FOUNDATION

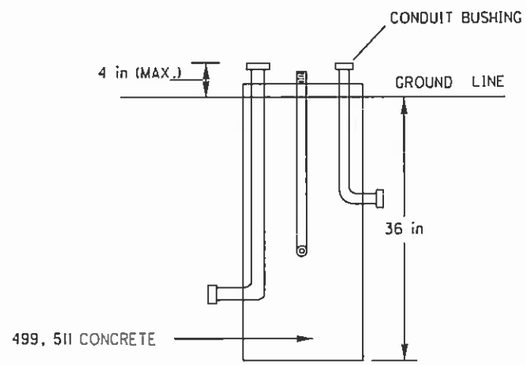

ELEVATION VIEW

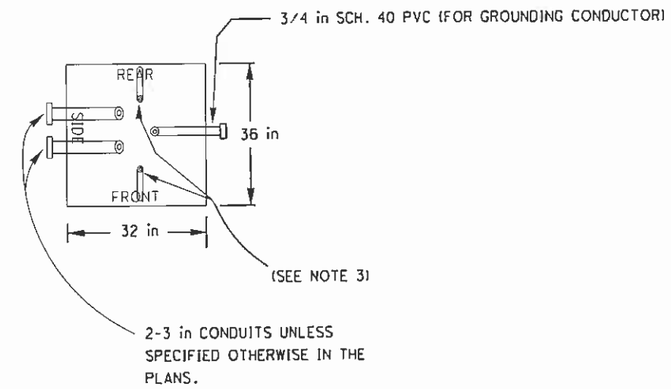

PLAN VIEW

332/336 CONTROLLER WORK PAD

(SEE NOTE 9)

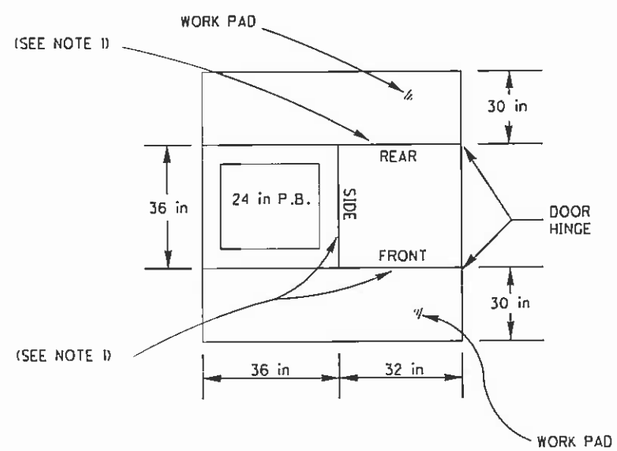

PLAN VIEW

NOTE: PULLBOX SHALL BE PLACED ON OPPOSITE SIDE OF DOOR HINGE

04-20-12

CABINET FOUNDATIONS AND PEDESTALS

OFFICE OF TRAFFIC ENGINEERING

TC-83.20

2/2

LM

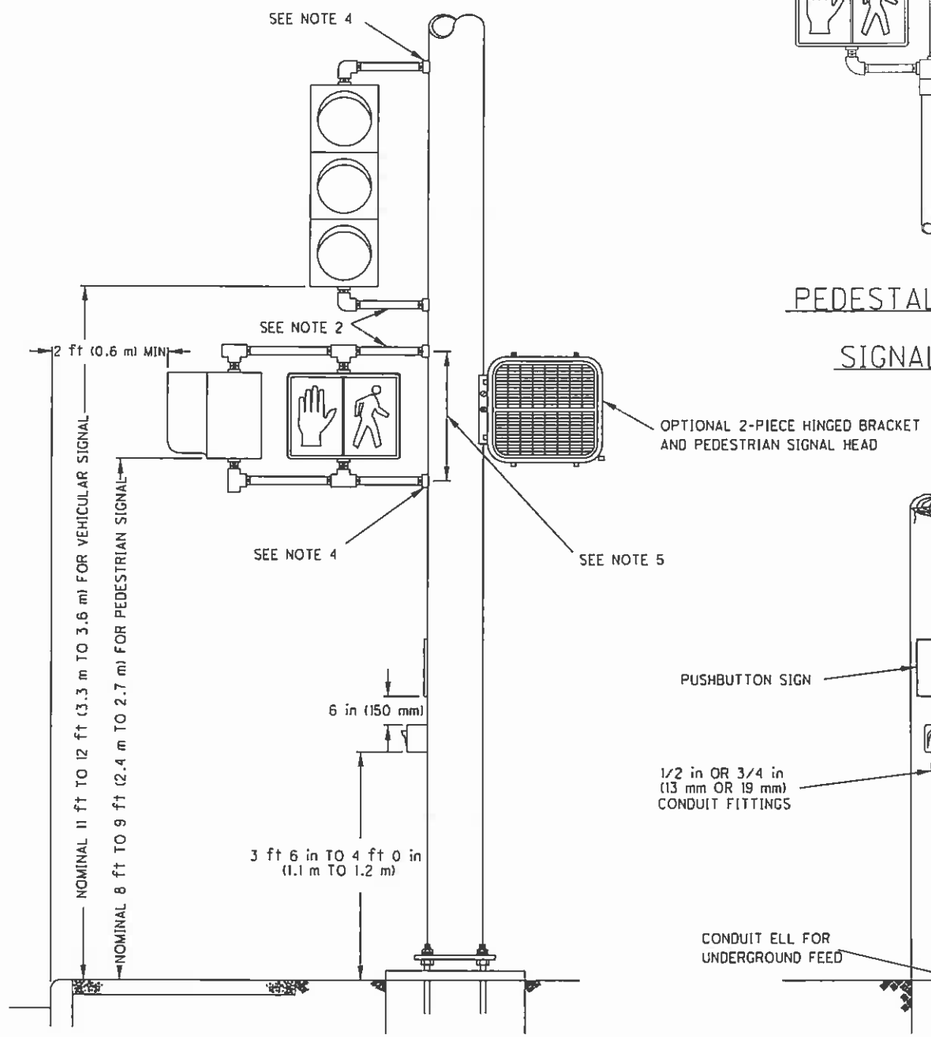

STEEL POLE DETAIL

SEE NOTE 3

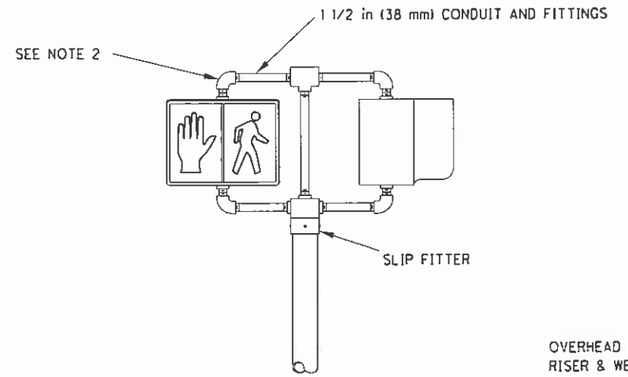

PEDESTAL MOUNTED

SIGNAL HEAD

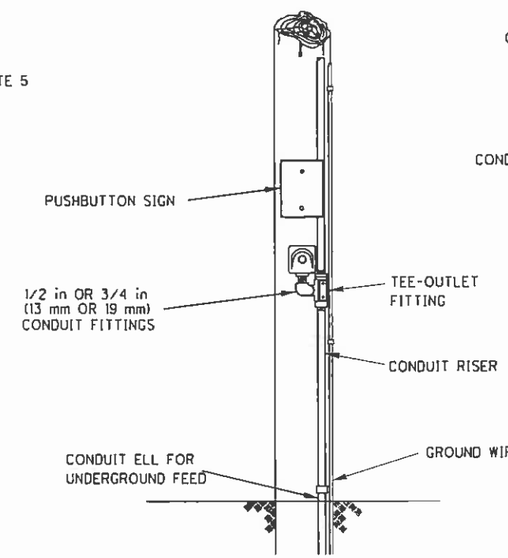

UNDERGROUND FEED

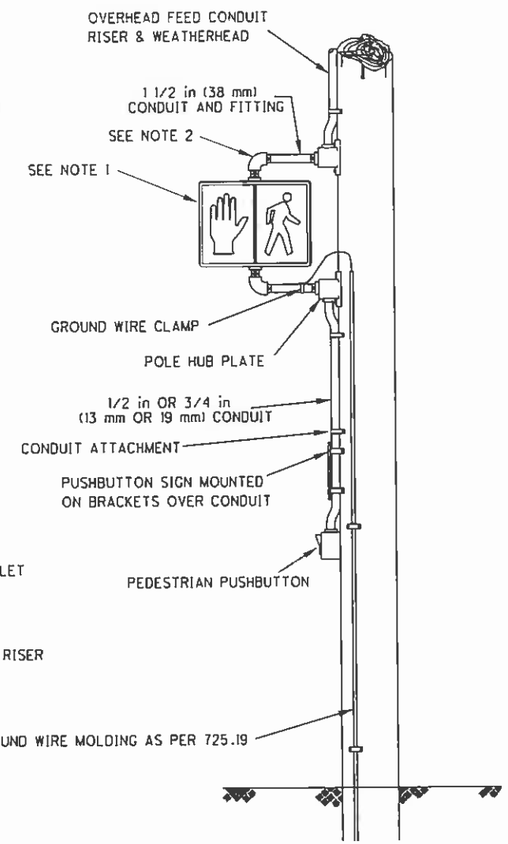

OVERHEAD FEED

WOOD POLE DETAIL

NOTES

1. Vehicular signal heads shall utilize mounting brackets similar to those shown for pedestrian signal heads.
2. Signal head conduit brackets and conduit fittings shall be galvanized and painted (except pole clamps or bands) to match the body of the signal head.
3. For embedded steel poles, external conduit shall be similar to that shown in wood pole detail. External grounding will not be required unless specifically noted on the plans.
4. The signal head bracket arms shall be attached to steel poles by one of the following methods:
   a. 1-1/2 inches (38 millimeters) blind half coupling welded into the pole prior to galvanizing.
   b. Bracket arm hub plates attached to the pole as per note 7.
   c. Pole clamp with threaded hub.

   Field installation of the wiring holes for signal heads and pushbuttons will be permitted provided that the holes are drilled or hole sawn. No torch cutting or field welding will be permitted. Cut surfaces shall be filed smooth and covered with two coats of zinc rich paint. Grommets or wiring guides shall be installed in the holes.
5. Vertical spacing between bracket fittings shall be determined by the Contractor, and shall be the dimension from centerline to centerline of the bracket arms necessary to accommodate the vertical height of the signal head plus not more than 10 inches (250 millimeters).
6. The following minimum size fasteners shall be used for the attachment of the indicated hardware to wood poles:
   a. CONDUIT BRACKET ARM HUB PLATES: 1/2 inch (13 millimeter) dia. X 3 inches (127 millimeter) long lag screws (two screws per hub plate).
   b. CONDUIT STRAPS (Two hole): 1/4 x 3 inches (6.4 x 76 millimeters) long lag screws, #14 x 3 inches (76 millimeters) long round head wood screws, or 20d spikes.
   c. PUSHBUTTON SIGN: with brackets - 3/8 x 3 inch (10 x 76 millimeters) long lag screws (two per bracket); without brackets - 3/8 x 3 inches (10 x 76 millimeters) long lag screws with 7/16 inch (11 millimeter) I.D. x 1 inch (25 millimeter) O.D. flat washer between the sign and pole (two per sign).
   d. PUSHBUTTON: #14 X 3 inches (76 millimeters) long round head wood screws or 1/4 x 3 inches (6.4 x 76 millimeters) long lag screws (two per pushbutton).
7. The following minimum size fasteners shall be used for the attachment of the indicated hardware to steel poles:
   a. CONDUIT BRACKET ARM HUB PLATES: 1/2 inch (13 millimeter) dia. screw or 3/4 inch (19 millimeter) wide passivated stainless steel band (two fasteners or bands per hub plate).
   b. CONDUIT: two hole conduit straps with 1/4 inch (6.4 millimeter) dia.screws or 3 /4 inch (19 millimeter) wide passivated stainless steel bands.
   c. PUSHBUTTON SIGN: 3/8 inch (10 millimeter) dia. screws (two per sign).
   d. PUSHBUTTON: 1/4 inch (6.4 millimeter) dia. screws (two per pushbutton).

   The screws shall utilize a drilled and tapped hole or be the self-tapping type.

10-16-09

POLE MOUNTINGS FOR SIGNAL HEADS

OFFICE OF TRAFFIC ENGINEERING

TC-85.10

1/1

LAM

RIGID SIGNAL HEAD MOUNTING FOR MAST ARMS

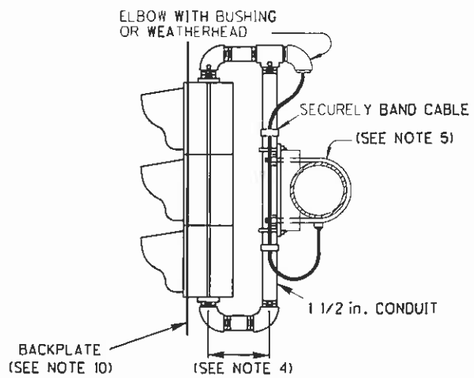

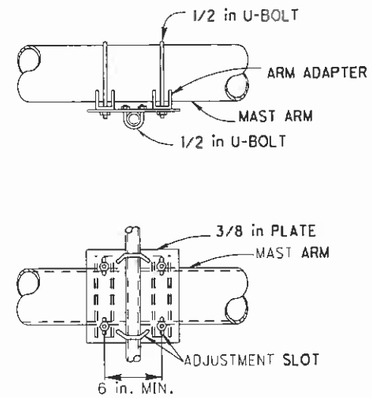

SIGNAL HEAD SUSPENSION

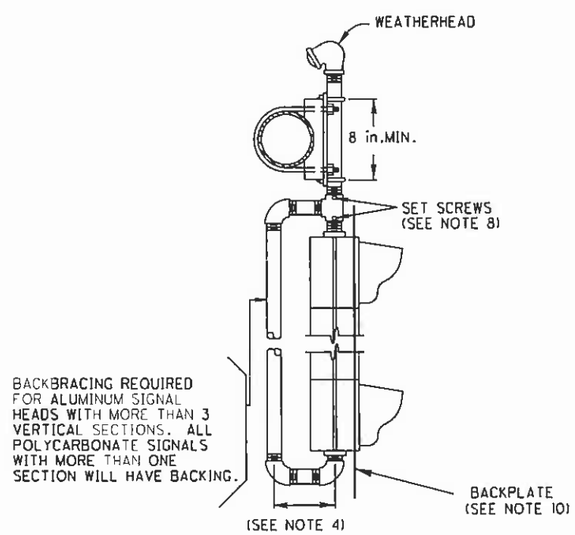

NOTES

1. Signal head conduit brackets and conduit fittings shall be galvanized. On span wire mounted signals, they shall be painted to match the body of the signal head. On mast arm mounted signals, they shall not be painted unless specified in the plans.

2. All signal head assemblies shall be installed in a plumb position and perpendicular to the approach lane.

3. The mast arm clamp shall have a minimum strenght at yield to support a 200 pound load.

4. A minimum of 17 inches is required for optically programmed signal heads and a minimum of 6 inches for standard signal heads.

5. Alternate rigid signal head mounting devices for mast arms may be approved by the Engineer upon demonstration that they provide adequate rigidity, equal range of adjustment and can be tightened sufficiently to prevent movement and loosening under vibration.

6. Signal heads shall be installed with a clearance above pavement elevation at the center of the roadway of 16 feet minimum, 18 feet maximum. It is intended that this clearance be obtained without the use of drop pipes, but rather by the careful selection of foundation heights, attachment heights, arm rise, and other factors during the installation. If the installation cannot be adjusted to the proper clearance the contractor shall advise the engineer of all signals which exceed the maximum. The engineer will, in consultation with the maintaining agency, direct the use of drop pipes or waive the maximum clearance requirement for each head. If drop pipes are necessary, adjustable signal hangers as detailed may be used.

7. Cable entrance openings on disconnect hangers shall rigidly clamp cable to prevent movement of the cable within the enclosure.

8. Signal head rotation shall be prevented by the use of serrated rings, set screws or other positive devices incorporated in the signal housing and at critical locations in the supporting hardware.

9. All conductors shall have adequate clearance between hangers, thimbles, bullrings, etc. in order to avoid damage from rubbing.

10. All backplates shall have 2 inch fluorescent yellow reflective border

07-15-11

OVERHEAD SIGNAL ATTACHMENT
MAST ARM

OFFICE OF TRAFFIC ENGINEERING

TC-85.20

1/1

LAM