STATE OF OHIO
CITY OF CANTON

WALNUT AVE. & CHERRY AVE. COMPLETE STREET AND BIKE LANE PROJECT

STA-43-12.64, PID 91592, GP1153

CITY OF CANTON
STARK COUNTY

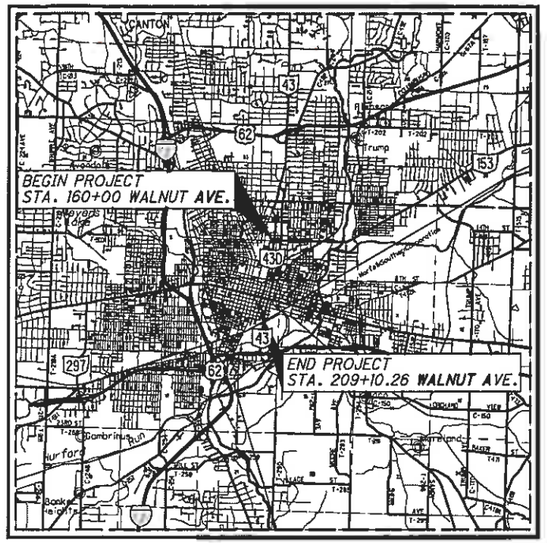

LOCATION MAP

LATITUDE: 40°48'10" LONGITUDE: 81°22'16"

SCALE IN MILES

0 1 2 3 4

N

PORTION TO BE IMPROVED
INTERSTATE & DIVIDED HIGHWAY — 62
UNDIVIDED STATE & FEDERAL ROUTES — 153
OTHER ROADS — WALNUT AVENUE

DESIGN DESIGNATION WALNUT AVENUE (S.R. 43D SOUTHBOUND)	12TH STREET NE TO 6TH STREET NE	6TH STREET NE TO 4TH STREET SE
CURRENT ADT (2012)	5200	5980
DESIGN YEAR ADT (2032)	5200	5980
DESIGN HOURLY VOLUME (2032)	560	640
DIRECTIONAL DISTRIBUTION	100%	100%
TRUCKS (24 HOUR B&C)	5%	12%
DESIGN SPEED	30 MPH	30 MPH
LEGAL SPEED	25 MPH	25 MPH
DESIGN FUNCTIONAL CLASSIFICATION:	URBAN PRINCIPAL ARTERIAL	URBAN PRINCIPAL ARTERIAL
NHS PROJECT	NO	NO

DESIGN EXCEPTIONS

NONE REQUIRED

UNDERGROUND UTILITIES

CONTACT BOTH SERVICES
CALL TWO WORKING DAYS
BEFORE YOU DIG

CALL
1-800-362-2764
(TOLL FREE)

OHIO UTILITIES PROTECTION SERVICE
NON-MEMBERS
MUST BE CALLED DIRECTLY

OIL & GAS PRODUCERS PROTECTIVE SERVICE CALL: **1-800-925-0988**

PLAN PREPARED BY:

HAMMONTREE & ASSOCIATES, LIMITED
5233 STONEHAM ROAD
NORTH CANTON, OHIO 44720

INDEX OF SHEETS:

TITLE SHEET	GT1
SCHEMATIC PLAN	GB1
TYPICAL SECTIONS	GY1-GY2
GENERAL NOTES	GN1-GN3
MAINTENANCE OF TRAFFIC NOTES	MN1
GENERAL SUMMARY	GG1-GG2
ROADWAY ESTIMATED QUANTITIES	GQ1-GQ8
PLAN AND PROFILE-WALNUT AVENUE	GP1-GP11
PLAN-CHERRY AVENUE	GP12-GP13
INTERSECTION DETAILS	GI1-GI6
DRIVE DETAILS AND SUBSUMMARY	GD1
STORM SEWER PROFILES	DF1-DF3
STREETSCAPE AND LIGHTING DETAILS	XX-XX
TYPICAL MINOR BRT STOP WITHOUT BUS SHELTER	A101
TYPICAL MAJOR BRT STOP WITH BUS SHELTER	A102
TRAFFIC CONTROL NOTES	CN1-CN3
SIGNING AND PAVEMENT MARKING SUBSUMMARY	TS1
SIGNING ESTIMATED QUANTITIES	TQ1-TQ11
PAVEMENT MARKING ESTIMATED QUANTITIES	TQ12-TQ21
SIGNING PLAN	TP1-TP11
PAVEMENT MARKING PLAN	TP1A-TP11A
TRAFFIC SIGNAL SUBSUMMARY	CS1
TRAFFIC SIGNAL PLAN	CP1-CP18

WALNUT AVENUE EARTH DISTURBED AREAS (E.D.A.)

PROJECT E.D.A.:	-- ACRES
ESTIMATED CONTRACTOR E.D.A.:	-- ACRES
TOTAL E.D.A.:	-- ACRES
NOTICE OF INTENT E.D.A.:	-- ACRES

CHERRY AVENUE EARTH DISTURBED AREAS (E.D.A.)

PROJECT E.D.A.:	-- ACRES
ESTIMATED CONTRACTOR E.D.A.:	-- ACRES
TOTAL E.D.A.:	-- ACRES
NOTICE OF INTENT E.D.A.:	-- ACRES

WORK-IN-PROGRESS
FINAL PLANS
2/6/2012
CITY OF CANTON MTG

PROJECT DESCRIPTION

TRANSPORTATION FACILITIES IMPROVEMENT PROJECT ALONG WALNUT AVENUE (S.R. 43D ONE-WAY SOUTHBOUND) FROM 12TH STREET N.E. (S.R. 153) TO 4TH STREET S.E. AND SECTIONS OF CHERRY AVENUE N.E. (S.R. 43D ONE-WAY NORTHBOUND) BETWEEN 6TH STREET N.E. TO 12TH STREET N.E. (S.R. 153).

WORK ALONG WALNUT AVENUE INCLUDES PAVEMENT PLANING AND RESURFACING, PAVEMENT MARKING UPGRADES TO ACCOMMODATE VEHICULAR THROUGH LANE REDUCTION AND CONTRAFLOW BIKE LANES, TRAFFIC SIGNAL UPGRADES AT 9 SIGNALIZED INTERSECTIONS, PARKING RECONFIGURATION WITH BACK-IN DIAGONAL ON-STREET PARKING, SARTA BUS SHELTER/STOP UPGRADES AT 10 DESIGNATED LOCATIONS, LIGHTING AND STREETSCAPE ENHANCEMENTS, AND MINOR CURBING AND WALK MODIFICATIONS AT BUS STOPS AND INTERSECTIONS.

WORK ON SECTIONS OF CHERRY AVENUE INCLUDE SARTA BUS SHELTER/STOP UPGRADES AND MINOR CURBING AND WALK MODIFICATIONS AT BUS STOPS.

SARTA BUS SHELTERS/STOP UPGRADES WILL OCCUR AT THE FOLLOWING LOCATIONS:

A. WALNUT AVENUE @ AMERMAN PLACE N.E., S.W. QUADRANT
B. WALNUT AVENUE @ 9TH STREET N.E., S.W. QUADRANT
C. WALNUT AVENUE, 700 BLOCK
D. WALNUT AVENUE @ 6TH STREET N.E., N.W. QUADRANT
E. WALNUT AVENUE @ 4TH STREET N.E., S.E. QUADRANT
F. CHERRY AVENUE @ 4TH STREET N.E., S.E. QUADRANT
G. CHERRY AVENUE @ 6TH STREET N.E., S.E. QUADRANT
H. CHERRY AVENUE @ HINER PLACE N.E., S.E. QUADRANT
I. CHERRY AVENUE @ LAWRENCE ROAD N.E., N.E. QUADRANT
J. CHERRY AVENUE @ 12TH STREET N.E., S.E. QUADRANT

2010 SPECIFICATIONS

THE STANDARD SPECIFICATIONS OF THE STATE OF OHIO, DEPARTMENT OF TRANSPORTATION, INCLUDING CHANGES AND SUPPLEMENTAL SPECIFICATIONS LISTED IN THE PROPOSAL SHALL GOVERN THIS IMPROVEMENT.

I HEREBY APPROVE THESE PLANS AND DECLARE THAT THE MAKING OF THIS IMPROVEMENT WILL NOT REQUIRE THE CLOSING TO TRAFFIC OF THE HIGHWAY AND THAT PROVISIONS FOR THE MAINTENANCE AND SAFETY OF TRAFFIC WILL BE AS SET FORTH ON THE PLANS AND ESTIMATES.

ENGINEERS SEAL:

FOR HIGHWAY PLAN EXCEPT BUS SHELTERS

SIGNED:
DATE:

STANDARD CONSTRUCTION DRAWINGS

BP-3.1	10-19-07	HL-30.11	10-16-09	TC-52.10	1-19-07			800-2010	10-21-11
BP-4.1	7-16-04	HL-30.22	4-17-09	TC-52.20	1-19-07			802	4-15-11
BP-5.1	7-28-00	HL-50.11	1-19-07	TC-71.10	1-21-11				
BP-7.1	10-15-10	HL-60.11	10-21-11	TC-73.10	10-21-11				
		HL-60.12	10-21-11	TC-81.21	10-21-11				
CB-2.2	7-15-05			TC-83.10	1-19-07				
		MT-97.11	10-15-10	TC-83.20	1-21-11				
MH-1.2	1-20-06	MT-97.12	10-15-11	TC-85.20	7-15-11				
								SPECIAL PROVISIONS	
DM-1.1	1-21-11	TC-22.20	1-21-11						
DM-1.2	10-21-05	TC-41.20	1-19-01						
DM-1.4	7-15-11	TC-41.41	1-21-11						
		TC-41.50	1-19-07						
		TC-42.20	1-21-11						

SUPPLEMENTAL SPECIFICATIONS

APPROVED _____
DATE _____ DISTRICT DEPUTY DIRECTOR

APPROVED _____
DATE _____ DIRECTOR, DEPARTMENT OF TRANSPORTATION

APPROVED _____
DATE _____ CANTON CITY ENGINEER

FEDERAL PROJECT NO. NONE

PID NO. 91592

CONSTRUCTION PROJECT NO.

RAILROAD INVOLVEMENT NONE

WALNUT & CHERRY COMPLETE STREET BIKE LANES

GT 1

R:\Stark\SARTA\Task 3 Canton\STA\91592\roadway\sheets\91592GT001.dgn 2/3/2012 8:16:19 AM jrath

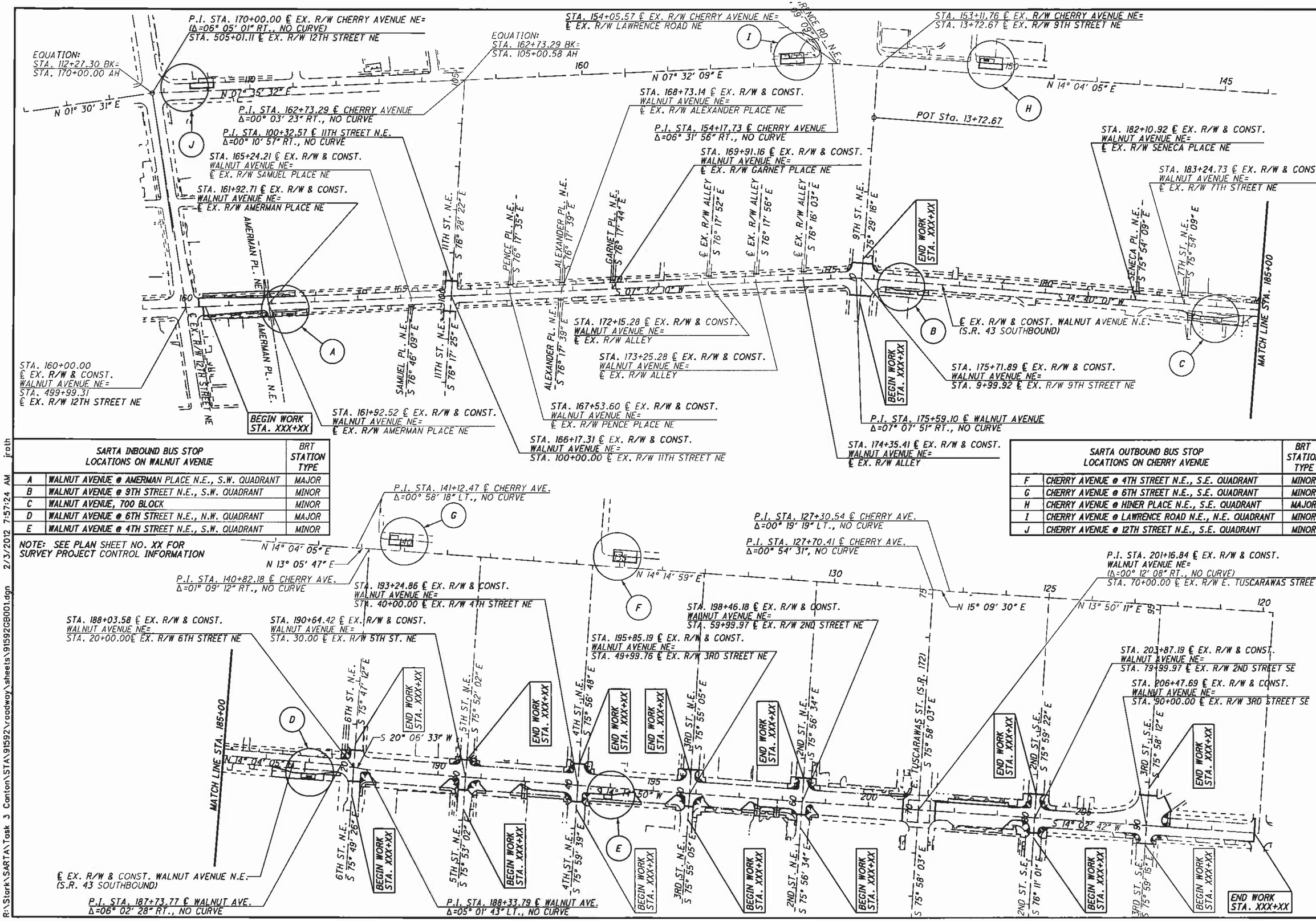

SARTA INBOUND BUS STOP LOCATIONS ON WALNUT AVENUE		BRT STATION TYPE
A	WALNUT AVENUE @ AMERMAN PLACE N.E., S.W. QUADRANT	MAJOR
B	WALNUT AVENUE @ 9TH STREET N.E., S.W. QUADRANT	MINOR
C	WALNUT AVENUE, 700 BLOCK	MINOR
D	WALNUT AVENUE @ 6TH STREET N.E., N.W. QUADRANT	MAJOR
E	WALNUT AVENUE @ 4TH STREET N.E., S.W. QUADRANT	MINOR

SARTA OUTBOUND BUS STOP LOCATIONS ON CHERRY AVENUE		BRT STATION TYPE
F	CHERRY AVENUE @ 4TH STREET N.E., S.E. QUADRANT	MINOR
G	CHERRY AVENUE @ 6TH STREET N.E., S.E. QUADRANT	MINOR
H	CHERRY AVENUE @ HINER PLACE N.E., S.E. QUADRANT	MAJOR
I	CHERRY AVENUE @ LAWRENCE ROAD N.E., N.E. QUADRANT	MINOR
J	CHERRY AVENUE @ 12TH STREET N.E., S.E. QUADRANT	MINOR

NOTE: SEE PLAN SHEET NO. XX FOR SURVEY PROJECT CONTROL INFORMATION

HORIZONTAL SCALE IN FEET: 0 50 100 200

CALCULATED HEH
CHECKED WLC

SCHEMATIC PLAN

WALNUT & CHERRY COMPLETE STREET BIKE LANES

GB-1

R:\Stark\SARTA\Task 3 Canton\STA\91592\roadway\sheets\91592GB001.dgn 2/3/2012 7:57:24 AM jroth

EXISTING LEGEND

- (A) EXISTING ASPHALT PAVEMENT (2"-4"±)
- (B) EXISTING BRICK PAVEMENT (3"±)
- (C) EXISTING MASTIC BED (¾"±)
- (D) EXISTING REINFORCED CONCRETE (7"±)
- (E) EXISTING INSULATION COURSE (3"±)

PROPOSED LEGEND

- (1) ITEM 448 - 1.25" ASPHALT CONCRETE SURFACE COURSE, TYPE 1, PG 64-22
- (2) ITEM 448 - 1.75" ASPHALT CONCRETE INTERMEDIATE COURSE, TYPE 2, PG 64-22
- (3) ITEM 301 - 6" ASPHALT CONCRETE BASE, PG 64-22
- (4) ITEM 304 - 6" AGGREGATE BASE, AS PER PLAN
- (5) ITEM 204 - SUBGRADE COMPACTION
- (6) ITEM 407 - TACK COAT FOR INTERMEDIATE COURSE (0.04 GAL./S.Y.)
- (7) ITEM 408 - PRIME COAT (0.04 GAL./S.Y)
- (8) ITEM 690 SPECIAL - REINFORCED MESH FOR TRANSVERSE AND/OR LONGITUDINAL JOINTS AND CRACKS, AS PER PLAN
- (9) ITEM 609 - CURB, TYPE 6

PAVEMENT TO BE REMOVED UNDER ITEM 203

NOTES

- [A] UNLESS OTHERWISE SHOWN ON CROSS SECTIONS.
- [B] PROPOSED SHOULDER SLOPE SHALL EQUAL RATE OF SUPERELEVATION OF ADJACENT PAVEMENT
- [C] THE EXISTING PAVEMENT EDGES SHALL BE SAWCUT
- [D] PLANE OFF 1.25" AND REPLACE WITH SURFACE COURSE

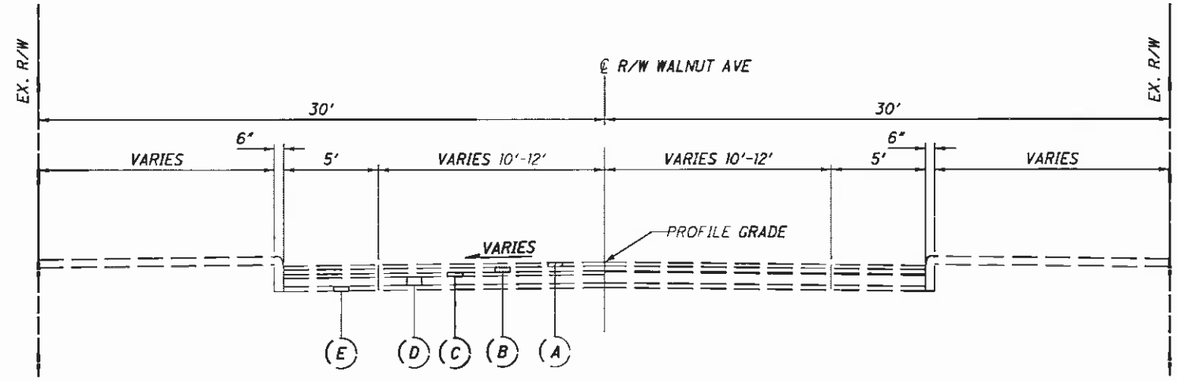

EXISTING SECTION - WALNUT AVENUE

SECTION APPLIES:
STA. 160+43.00 TO STA. 161+55.00

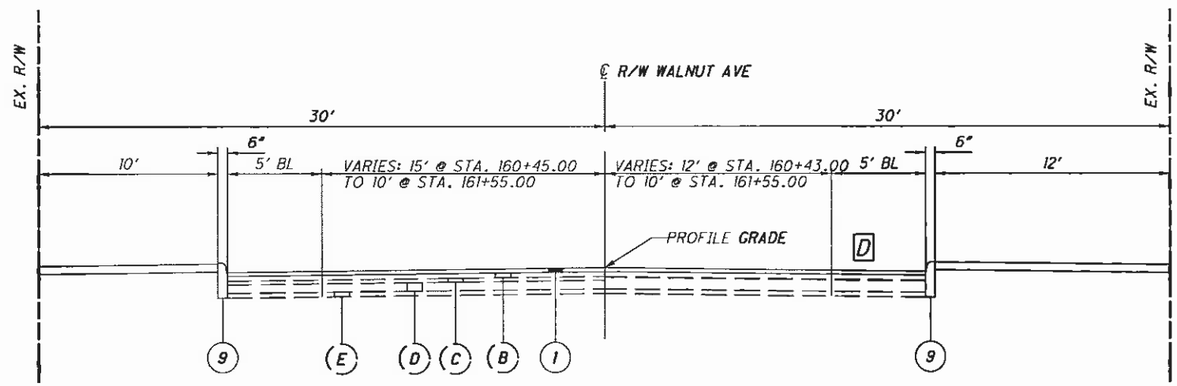

NORMAL SECTION - WALNUT AVENUE

SECTION APPLIES:
STA. 160+43.00 TO STA. 161+55.00

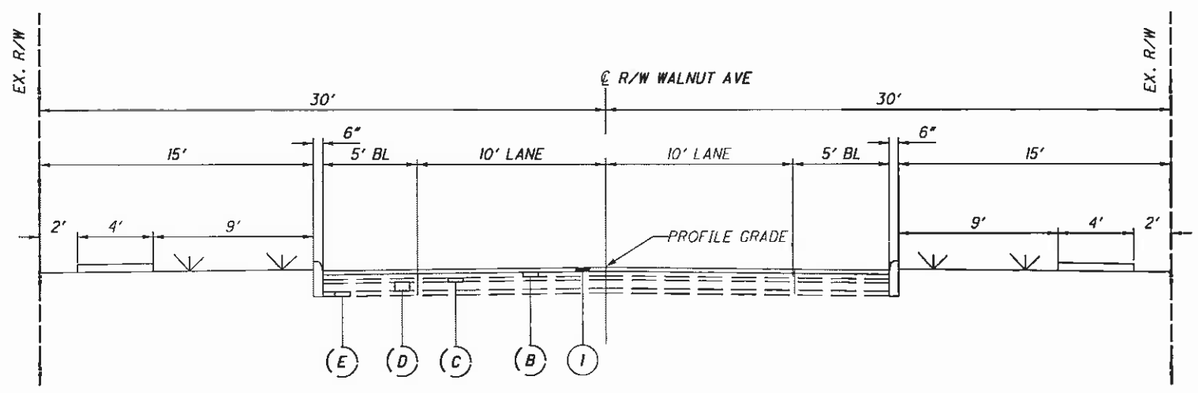

NORMAL SECTION - WALNUT AVENUE

SECTION APPLIES:
STA. 161+55.00 TO STA. 187+73.10

TYPICAL SECTIONS

WALNUT & CHERRY
COMPLETE STREET
BIKE LANES

GY
1

R:\Stark\SARTA\Task 3 Canton\STA\91592\roadway\sheets\91592GY001.dgn 2/2/2012 4:32:16 PM jroth

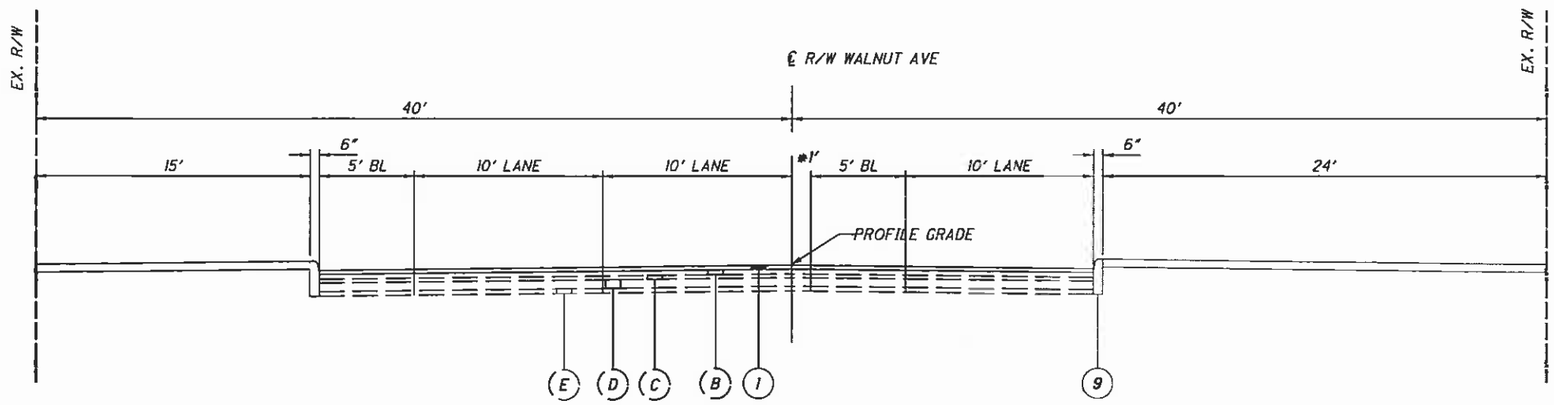

NORMAL SECTION - WALNUT AVENUE

SECTION APPLIES:
STA. 188+33.79 TO STA. 203+54.91

*℄ VARIANCE:
VARIES RT.: 1' @ STA. 187+73.10 TO 0' @ STA. 201+16.84

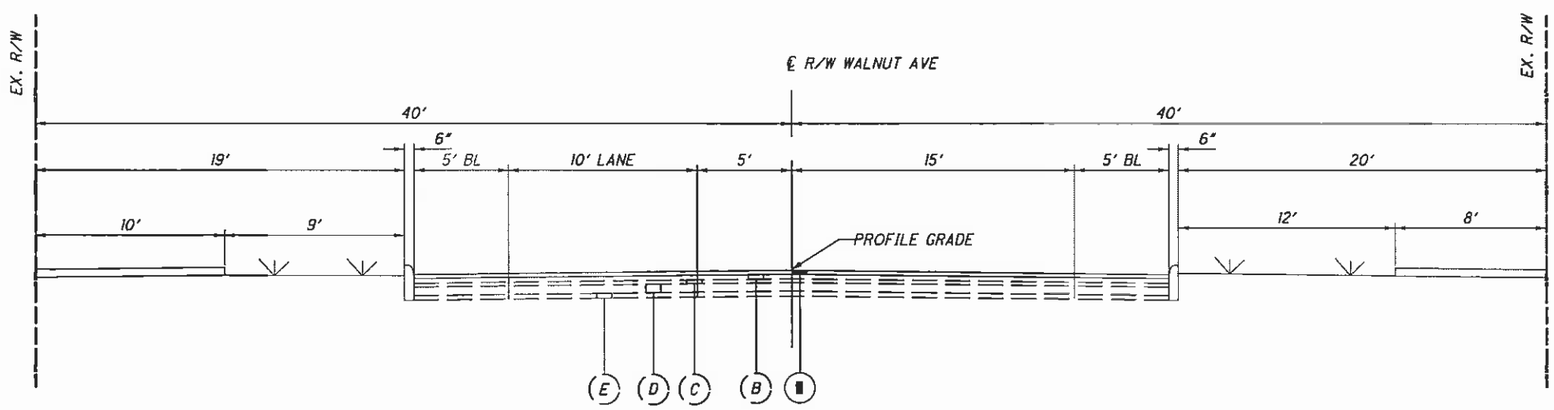

NORMAL SECTION - WALNUT AVENUE

SECTION APPLIES:
STA. 204+13.28 TO STA. 209+10.26

TYPICAL SECTIONS

WALNUT & CHERRY
COMPLETE STREET
BIKE LANES

GY
2

R:\Stark\SARTA\Task 3 Canton\STA\91592\roadway\sheets\91592GY002.dgn 2/2/2012 4:32:37 PM jroth

UTILITIES

LISTED BELOW ARE ALL UTILITIES LOCATED WITHIN THE PROJECT CONSTRUCTION LIMITS TOGETHER WITH THEIR RESPECTIVE OWNERS:

AMERICAN ELECTRIC POWER
ATTN: RAT ZITNEY
301 CLEVELAND AVENUE S.W.
CANTON, OHIO 44720
PHONE: 330-438-7718
FAX: 330-438-7338
EMAIL: rlzitney@aep.com

AT&T OHIO
ATTN: GINO SANTILLO
50 WEST BOWERY STREET, 6TH FLOOR
AKRON, OHIO 44308
PHONE: 330-384-2245
EMAIL: ls2671@att.com

CANTON WATER DEPARTMENT
ATTN: TYLER CONVERSE
2664 HARRISBURG ROAD N.W.
CANTON, OHIO 44705
PHONE: 330-489-3310
FAX: 330-489-3073

DOMINION EAST OHIO
ATTN: MARY J. LONG
320 SPRINGSIDE DRIVE, SUITE 320
AKRON, OHIO 44333
PHONE: 330-664-2409
FAX: 330-266-2127
EMAIL: mary.j.long@dom.com

CITY OF CANTON ENGINEERING DEPARTMENT
ATTN: NICHOLAS J. LOUKAS
2436 30TH STREET N.E.
CANTON, OHIO 44705
PHONE: 330-438-6920
FAX: 330-489-3337
EMAIL: nick.loukas@cantonohio.gov

TIME WARNER CABLE
ATTN: TIM KNIGHT
5520 WHIPPLE AVENUE N.W.
NORTH CANTON, OHIO 44720
PHONE: 330-494-9200
FAX: 330-490-2555
EMAIL: tim.knight@twcable.com

THE LOCATION OF THE UNDERGROUND UTILITIES SHOWN ON THE PLANS ARE AS OBTAINED FROM THE OWNERS AS REQUIRED BY SECTION 153.64 O.R.C.

EXISTING PLANS

EXISTING PLANS ENTITLED STA-43-13.56 DATED 1969 MAY BE INSPECTED IN THE ODOT DISTRICT 4 OFFICE IN AKRON, OHIO.

CONSTRUCTION NOISE

ACTIVITIES AND LAND USE ADJACENT TO THIS PROJECT MAY BE AFFECTED BY CONSTRUCTION NOISE. IN ORDER TO MINIMIZE ANY ADVERSE CONSTRUCTION NOISE IMPACTS, DO NOT OPERATE POWER-OPERATED CONSTRUCTION- TYPE DEVICES BETWEEN THE HOURS OF 7 A.M. AND 7 P.M. IN ADDITION, DO NOT OPERATE AT ANY TIME ANY DEVICE IN SUCH A MANNER THAT THE NOISE CREATED SUBSTANTIALLY EXCEEDS THE NOISE CUSTOMARILY AND NECESSARILY ATTENDANT TO THE REASON- ABLE AND EFFICIENT PERFORMANCE OF SUCH EQUIPMENT.

SURVEYING POSITIONAL PARAMETERS

USE THE FOLLOWING VERTICAL AND HORIZONTAL POSITIONING PARAMETERS FOR ALL SURVEYING:

VERTICAL POSITIONING:

ORTHOMETRIC HEIGHT DATUM:	NAVD 1988
GEOID:	GEOID2009

HORIZONTAL POSITIONING:

REFERENCE FRAME:	NAD 83 (CORS 96)
ELLIPSOID:	GRS80
MAP PROJECTION:	LAMBERT CONFORMAL CONIC
COORDINATE SYSTEM:	OHIO STATE PLANE, NORTH ZONE
COMBINED SCALE FACTOR:	0.999907280000
ORIGIN OF SCALE (X,Y) -	
EASTING (X):	0.000
NORTHING (Y):	0.000

FURNISH UNITS IN U.S. SURVEY FEET. USE THE FOLLOWING CONVERSION FACTOR: 1 METER = 3.28083333333 FEET

WORK LIMITS

THE WORK LIMITS SHOWN ON THESE PLANS ARE FOR PHYSICAL CONSTRUCTION ONLY. PROVIDE THE INSTALLATION AND OPERATION OF ALL WORK ZONE TRAFFIC CONTROL AND WORK ZONE TRAFFIC CONTROL DEVICES REQUIRED BY THESE PLANS WHETHER INSIDE OR OUTSIDE THESE WORK LIMITS.

PROTECTION OF RIGHT-OF-WAY LANDSCAPING

PRIOR TO BEGINNING WORK, THE CONTRACTOR, THE PROJECT ENGINEER, AND A REPRESENTATIVE OF THE MAINTAINING AGENCY WILL REVIEW AND RECORD ALL LANDSCAPING ITEMS WITHIN THE RIGHT OF WAY (BOTH WITHIN AND OUTSIDE THE CONSTRUCTION LIMITS) A RECORD OF THIS REVIEW WILL BE KEPT IN THE PROJECT ENGINEER'S FILES. PRIOR TO FINAL ACCEPTANCE, A FINAL REVIEW OF LANDSCAPING ITEMS WILL BE MADE.

CONSTRICT ALL ACTIVITIES, EQUIPMENT STORAGE, AND STAGING TO WITHIN THE CONSTRUCTION LIMITS. UNLESS OTHERWISE IDENTIFIED IN THE PLANS OR PROPOSAL, THE CONSTRUCTION LIMITS ARE IDENTIFIED AS THE EXISTING RIGHT OF WAY LIMITS.

SUBMIT A WRITTEN REQUEST TO THE PROJECT ENGINEER TO USE ANY AREA OUTSIDE THESE LIMITS. THE DOCUMENT SUBMITTED MUST CLEARLY IDENTIFY THE AREA AND EXPLAIN THE PROPOSED USE AND RESTORATION OF THE AREA. EXCEPT AS INDICATED ON SHEET ___ USE OF THESE AREAS FOR DISPOSAL OF WASTE MATERIAL AND CONSTRUCTION DEBRIS, EXCAVATION OF BORROW MATERIAL AND PLACEMENT OF PORTABLE PLANTS IS PROHIBITED. THE REQUEST MUST BE APPROVED, IN WRITING, BEFORE THE CONTRACTOR HAS PERMISSION TO USE THE AREA.

ANY ITEMS DAMAGED BEYOND THE CONSTRUCTION LIMITS AS DEFINED ABOVE WILL BE REPLACED IN KIND OR AS APPROVED BY THE PROJECT ENGINEER.

CLEARING AND GRUBBING

ALTHOUGH THERE ARE NO TREES OR STUMPS SPECIFICALLY MARKED FOR REMOVAL WITHIN THE LIMITS OF THE PROJECT, A LUMP SUM QUANTITY IS INCLUDED IN THE GENERAL SUMMARY FOR ITEM 201, CLEARING AND GRUBBING. ALL PROVISIONS AS SET FORTH IN THE SPECIFICATIONS UNDER THIS ITEM ARE INCLUDED IN THE LUMP SUM PRICE BID FOR ITEM 201, CLEARING AND GRUBBING.

R:\Stark\SARTA\Task 3 Canton\STA\91592\roadway\sheets\91592GN001.dgn 2/2/2012 4:24:00 PM jroth

SHEET NUMBER											PARTICIPATION		ITEM	ITEM EXT.	GRAND TOTAL	UNIT	DESCRIPTION	SEE SHEET NO.
	10			11							CITY	STATE						
																	ROADWAY	
	2554										2554		202	32000	2554	FT	CURB REMOVED	
	1										1		202	58000	1	EACH	MANHOLE REMOVED	
	14										14		202	58100	14	EACH	CATCH BASIN REMOVED	
	49										49		202	98100	49	EACH	REMOVAL MISC.: PARKING METER TO BE REMOVED AND REUSED	5
	13										13		604	00800	13	EACH	CATCH BASIN, NO. 3A	
	2										2		604	09000	2	EACH	CATCH BASIN ADJUSTED TO GRADE	
	9										9		604	31500	9	EACH	MANHOLE, NO. 3	
	8										8		604	34500	8	EACH	MANHOLE ADJUSTED TO GRADE	
	847.9										847.9		608	12000	847.9	SQ FT	5" CONCRETE WALK	
	33										33		608	52010	33	SQ FT	CURB RAMP, TYPE A1	
	LUMP										LUMP		SPECIAL	69021000	LUMP		MISC.: BUS SHELTER	5
	LUMP										LUMP		SPECIAL	69021000	LUMP		MISC.: TREE WITH BRICKS	5
	40										40		SPECIAL	69098000	40	EACH	MISC.: CITY OF CANTON PARKING METER	5
																	DRAINAGE	
	40										40		603	04600	40	FT	12" CONDUIT, TYPE C	
	16										16		603	07400	16	FT	18" CONDUIT, TYPE B	
	5										5		603	07600	5	FT	18" CONDUIT, TYPE C	
																	PAVEMENT	
	3036										3036		609	26000	3036	FT	CURB, TYPE 6	
																	LIGHTING	
	7										7		625	10480	7	EACH	LIGHT POLE, DECORATIVE	
																	TRAFFIC CONTROL	
				787.5							787.5		630	03100	787.5	FT	GROUND MOUNTED SUPPORT, NO. 3 POST	
				115.5							115.5		630	08004	115.5	FT	ONE WAY SUPPORT, NO. 3 POST	
				42							42		630	08520	42	FT	STREET NAME SIGN SUPPORT, NO. 3 POST	
				102							102		630	79100	102	EACH	SIGN HANGER ASSEMBLY, MAST ARM	
				50							50		630	79500	50	EACH	SIGN SUPPORT ASSEMBLY, POLE MOUNTED	
				1054.6							1054.6		630	80100	1054.6	SQ FT	SIGN, FLAT SHEET	
				4.9							4.9		630	80401	4.9	SQ FT	SIGN, PERMANENT OVERLAY, AS PER PLAN	
				5.1							5.1		630	80500	5.1	EACH	SIGN, DOUBLE FACED, STREET NAME	
				108.8							108.8		630	80510	108.8	EACH	SIGN, STREET NAME	
				118							118		630	84900	118	EACH	REMOVAL OF GROUND MOUNTED SIGN AND DISPOSAL	
				7							7		630	85100	7	EACH	REMOVAL OF GROUND MOUNTED SIGN AND REERECTION	
				4.9							4.9		630	80401	4.9	SQ FT	SIGN, PERMANENT OVERLAY, AS PER PLAN	
				85							85		630	86002	85	EACH	REMOVAL OF GROUND MOUNTED POST SUPPORT AND DISPOSAL	
				36							36		630	87400	36	EACH	REMOVAL OF OVERHEAD MOUNTED SIGN AND DISPOSAL	
				49							49		630	87500	49	EACH	REMOVAL OF POLE MOUNTED SIGN AND DISPOSAL	
				2							2		630	87520	2	EACH	REMOVAL OF POLE MOUNTED SIGN AND REERECTION	

CALCULATED HEH
CHECKED WLC

GENERAL SUMMARY

WALNUT & CHERRY
COMPLETE STREET
BIKE LANES

GG
1

R:\Stark\SARTA\Task 3 Canton\STA\91592\roadway\sheets\91592GG01.dgn 2/2/2012 4:16:04 PM jroth

SHEET NUMBER 11	SHEET NUMBER 12	PARTICIPATION CITY	PARTICIPATION STATE	ITEM	ITEM EXT.	GRAND TOTAL	UNIT	DESCRIPTION	SEE SHEET NO.
								TRAFFIC CONTROL (CONTINUED)	
0.85		0.85		644	00200	0.85	MILE	LANE LINE	
167.87		167.87		644	00300	167.87	MILE	CENTER LINE (DOUBLE SOLID)	
5483		5483		644	00400	5483	FT	CHANNELIZING LINE	
1374		1374		644	00500	1374	FT	STOP LINE	
2259		2259		644	00600	2259	FT	CROSSWALK LINE	
609		609		644	00700	609	FT	TRANSVERSE/DIAGONAL LINE	
846		846		644	01200	846	FT	PARKING LOT STALL MARKING	
236		236		644	01300	236	EACH	LANE ARROW	
1094		1094		644	01500	1094	FT	DOTTED LINE, 4" (WHITE)	
105		105		644	01500	105	FT	DOTTED LINE, 4" (YELLOW)	
262		262		644	01630	262	EACH	BIKE LANE SYMBOL MARKING	
731		731		644	50200	731	SQ FT	PAVEMENT MARKING, MISC.: GREEN BIKE BOX	
3107		3107		644	50200	3107	SQ FT	PAVEMENT MARKING, MISC.: GREEN PAINTED LANE	
								TRAFFIC SIGNALS	
	LUMP	LUMP		614	11000	LUMP		MAINTAINING TRAFFIC	
	LUMP	LUMP		623	10000	LUMP		CONSTRUCTION LAYOUT STAKES	
	LUMP	LUMP		624	10000	LUMP		MOBILIZATION	
	183	183		625	25400	183	FT	CONDUIT, 2", 725.04	
	158	158		625	25500	158	FT	CONDUIT, 3", 725.04	
	341	341		625	29601	341	FT	TRENCH IN PAVED AREA, TYPE B, AS PER PLAN	
	2	2		625	30702	2	EACH	PULL BOX, 725.06, 18"	
	3	3		625	30708	3	EACH	PULL BOX, 725.06, 24"	
	15	15		625	32000	15	EACH	GROUND ROD	
	341	341		625	36000	341	FT	PLASTIC CAUTION TAPE	
	1	1		625	75410	1	EACH	LIGHT POLE REMOVED FOR REUSE	
	17	17		632	05005	17	EACH	VEHICULAR SIGNAL HEAD, (LED), 3-SECTION, 12" LENS, 1-WAY, POLYCARBONATE, AS PER PLAN	
	17	17		632	25000	17	EACH	COVERING OF VEHICULAR SIGNAL HEAD	
	5369	5369		632	40700	5369	FT	SIGNAL CABLE, 7 CONDUCTOR, NO. 14 AWG	
	5	5		632	64011	5	EACH	SIGNAL SUPPORT FOUNDATION, AS PER PLAN	
	9	9		632	64021	9	EACH	PEDESTAL FOUNDATION, AS PER PLAN	
	0	0		632	80700	0	EACH	SIGNAL SUPPORT, MISC.: NOSTALGIA SIGNAL SUPPORT - UNION METAL CORP. (ONE-ARM)	
	5	5		632	80700	5	EACH	SIGNAL SUPPORT, MISC.: NOSTALGIA SIGNAL SUPPORT - UNION METAL CORP. (TWO-ARM)	
	8	8		632	90010	8	EACH	PEDESTAL, MISC.: NOSTALGIA PEDESTAL - UNION METAL CORP. (8')	
	1	1		632	90010	1	EACH	PEDESTAL, MISC.: NOSTALGIA PEDESTAL WITH TWIN LUMINAIRE NL318R - UNION METAL CORP. (18')	
	9	9		632	90020	9	EACH	REMOVAL OF MISCELLANEOUS TRAFFIC SIGNAL ITEM - PEDESTAL	
	5	5		632	90020	5	EACH	REMOVAL OF MISCELLANEOUS TRAFFIC SIGNAL ITEM - SIGNAL SUPPORT	
	30	30		632	90201	30	EACH	REUSE OF VEHICULAR SIGNAL HEAD, AS PER PLAN	
	28	28		632	90203	28	EACH	REUSE OF PEDESTRIAN SIGNAL HEAD, AS PER PLAN	
	2	2		632	90400	2	EACH	SIGNALIZATION, MISC.: BICYCLE SIGNAL POST TOP ASSEMBLY - PELCO INC.	
	16	16		633	67301	16	EACH	PREEMPTION, AS PER PLAN	
	16	16		633	67311	16	EACH	PREEMPTION RECEIVING UNIT, AS PER PLAN	
	1304	1304		633	67321	1304	FT	PREEMPTION DETECTOR CABLE, AS PER PLAN	
	16	16		633	67401	16	EACH	PREEMPTION CONFIRMATION LIGHT, AS PER PLAN	
								MAINTENANCE OF TRAFFIC	

CALCULATED HEH
CHECKED WLC

GENERAL SUMMARY

WALNUT & CHERRY COMPLETE STREET BIKE LANES

GG 2

R:\Stark\SARTA\Task 3 Canton\STA\91592\roadway\sheets\91592GG002.dgn 2/2/2012 4:16:40 PM jroth

REF. NO.	SHEET NO.	STATION FROM (ALL STATIONS REFERENCE WALNUT AVENUE UNLESS OTHERWISE NOTED)	STATION TO	SIDE	202 PAVEMENT REMOVED (SQ FT)	202 WALK REMOVED (SQ FT)	202 CONCRETE MEDIAN REMOVED	202 CURB REMOVED (FT)	202 PIPE REMOVED, 24" AND UNDER (FT)	202 GUARD POST REMOVED (EACH)	202 MANHOLE REMOVED (EACH)	202 CATCH BASIN OR INLET REMOVED (EACH)	202 SPECIAL - FILL AND PLUG EXISTING CONDUIT (FT)	202 REMOVAL MISC.: LUMINAIRE AND BRACKET ARM (EACH)	202 REMOVAL MISC.: UTILITY POLE (EACH)		202 REMOVAL MISC.: PARKING METER (EACH)
R-1	GP1	160+30	161+84	LT				158									
R-2	GP1	160+40	161+73	RT				133									
R-0	GP1	161+20	161+42	LT						4							
R-0	GP1	161+60		LT								1	9				
R-3	GP2	161+96	162+55	LT				68									
R-4	14	162+02	162+10					20									
R-4	16	175+95	176+80	RT				109									
R-5	16	176+10		RT								1					
R-6	18	183+53	184+43					99									
R-7	19	187+60	187+82	LT				43									
R-8	19	188+15	188+47	LT				44									
R-9	19	188+25		RT							1						
R-10	19	188+29		RT								1					
R-11	19	188+27	189+17	RT				115									
R-12	19	189+01		RT													1
R-13	19	189+21		LT													1
R-14	19	189+22		RT													1
R-15	19	189+43		LT													1
R-16	19	189+84		RT													1
R-17	19	190+02		RT													1
R-18	19	190+11		LT													1
R-19	19	190+23		RT								1					
R-20	19	189+88	190+49	RT				89									
R-21	19	190+46		RT								1					
R-22	19	190+83		RT								1					
R-23	19	190+80	191+18	RT				59									
R-24	19	191+28		RT													1
R-25	19	191+33		LT													1
R-26	19	191+57		LT													1
R-27	19	191+75		LT													1
R-28	19	191+58	193+05	RT				157									
R-29	20	192+33		LT													1
R-30	20	192+57		LT													1
R-31	20	192+88		RT								1					
R-32	20	193+45	194+58	RT				131									
R-33	20	193+95		LT													1
R-34	20	194+04		RT													1
R-35	20	194+28		RT													1
R-36	20	194+41		LT													1
R-37	20	194+64		LT													1
R-38	20	194+82		LT													1
R-39	20	195+51		RT								1					
R-40	20	195+95	196+41	RT				63									
R-41	20	196+26		RT								1					
R-42	20	196+49		LT													1
R-43	20	196+73		LT													1
R-44	20	196+96		LT													1
R-45	21	197+01	198+36	RT				147									
R-46	21	197+14		LT													1
R-47	21	197+81		LT													1
R-48	21	198+06		RT								1					
R-49	21	198+67		RT								1					
R-50	21	198+67	198+98	RT				51									
R-51	21	199+12		RT													1
R-52	21	199+34		RT													1
R-53	21	199+57		RT													1
R-54	21	199+74		LT													1
TOTALS CARRIED TO GENERAL SUMMARY					0	0	0	1486	0	4	1	11	9	0			28

CALCULATED JMK/HEH
CHECKED WLC

ESTIMATED QUANTITIES

WALNUT & CHERRY
COMPLETE STREET
BIKE LANES

GQ
1

R:\Stark\SARTA\Task 3 Canton\STA\91592\roadway\sheets\91592GQ001.dgn 2/3/2012 8:09:38 AM jroth

REF. NO.	SHEET NO.	STATION (ALL STATIONS REFERENCE WALNUT AVENUE UNLESS OTHERWISE NOTED) FROM	TO	SIDE	202 CURB REMOVED (FT)	202 CATCH BASIN REMOVED (EACH)	202 REMOVAL MISC.: PARKING METER (EACH)
R-55	21	199+80		RT			1
R-56	21	199+97		LT			1
R-57	21	200+03		RT			1
R-58	21	200+20		LT			1
R-59	21	200+26		RT			1
R-60	21	200+45		RT			1
R-61	21	200+21	200+97	RT	93		
R-62	21	200+42	200+98	LT	74		
R-63	21	200+73		RT		1	
R-64	21	201+43		RT		1	
R-65	21	201+44	201+95	RT	68		
R-66	21	201+36	203+69	LT	278		
R-67	22	202+22		RT			1
R-68	22	202+22		LT			1
R-69	22	202+45		LT			1
R-70	22	202+45		RT			1
R-71	22	202+68		LT			1
R-72	22	202+90		RT			1
R-73	22	202+91		LT			1
R-74	22	203+13		RT			1
R-75	22	203+13		LT			1
R-76	22	203+14	203+70	RT	76		
R-77	22	203+40		RT		1	
R-78	22	204+05	204+41	LT	57		
R-79	22	205+61	206+28	LT	93		
R-80	22	206+68	206+96	RT	50		
R-81	22	207+07	207+08	LT	44		
R-82	23	207+28		LT			1
R-83	23	207+51		LT			1
R-84	23	207+74		LT			1
R-85	23	207+96		LT			1
R-86	23	208+19		LT			1
R-87	23	208+41		LT			1
R-88	23	208+74		LT		1	
R-89	23	208+57	208+95	LT	49		
R-90	24	135+17	135+44	RT	36		
R-91	25	140+43	140+64	RT	50		
R-92	26	151+99	153+16	RT	162		
TOTALS CARRIED TO GENERAL SUMMARY					1130	4	21

CALCULATED JMK/HEH
CHECKED WLC

ESTIMATED QUANTITIES

WALNUT & CHERRY COMPLETE STREET BIKE LANES

GQ 2

R:\Stark\SARTA\Task 3 Canton\STA\91592\roadway\sheets\91592GQ002.dgn 2/3/2012 8:01:46 AM jroth

REF. NO.	SHEET NO.	STATION FROM (ALL STATIONS REFERENCE WALNUT AVENUE UNLESS OTHERWISE NOTED)	STATION TO	SIDE	608 CURB RAMP, TYPE A1 SQ FT	608 CURB RAMP, TYPE A1 EACH	608 CURB RAMP, TYPE C2 EACH					690 SPECIAL - MISC.: TYPICAL CITY STREETSCAPE PAVERS, TREE FRAME, AND GATE EACH										
TOTALS CARRIED TO GENERAL SUMMARY					210	46	2	0	0	0	0	6	0	0	0	0	0	0				

CALCULATED JMK/HEH
CHECKED WLC

ESTIMATED QUANTITIES

WALNUT & CHERRY COMPLETE STREET BIKE LANES

GQ 3

R:\Stork\SARTA\Task 3 Carlton\STA\91592\roadway\sheets\91592GQ003.dgn 2/3/2012 8:02:20 AM jroth

REF. NO.	SHEET NO.	STATION (ALL STATIONS REFERENCE WALNUT AVENUE UNLESS OTHERWISE NOTED) FROM	TO	SIDE	608 4" CONCRETE WALK SQ FT
SW-1	GP1	160+40	161+84	LT	1374
SW-2	GP1	160+40	161+05	RT	526
SW-3	GP1	161+25	161+91	RT	723
SW-4	GP1-GP2	161+95	162+55	LT	612
SW-5	GP2	162+02	162+23	RT	187
SW-6	GP2	162+55	162+84	RT	315
SW-7	GP4	176+30	176+87	RT	490
SW-8	GP5	177+05	177+30	RT	250
SW-9	GP6	183+47	184+65	RT	1607
SW-10	GP6-GP7	186+16	187+76	RT	1699
SW-11	GP7	187+73	187+91	LT	310
SW-12	GP7	188+28	188+58	RT	880
SW-13	GP7	190+25	190+49	LT	220
SW-14	GP7	190+07	190+49	LT	201
SW-15	GP7	190+07	190+49	RT	804
SW-16	GP7	190+72	191+13	RT	802
SW-17	GP7	191+71	191+97	RT	468
SW-18	GP8	192+09	193+13	RT	1574
SW-19	GP8	192+90	193+12	LT	391
SW-20	GP8	193+37	193+60	LT	341
SW-21	GP8	193+37	194+74	RT	2504
SW-22	GP8	195+31	195+75	RT	974
SW-23	GP8	195+54	195+75	LT	374
SW-24	GP8	195+96	196+20	LT	407
SW-25	GP8	195+96	196+35	RT	1020
SW-26	GP9	197+06	197+38	RT	558
SW-27	GP9	197+50	197+83	RT	460
SW-28	GP9	197+95	198+36	RT	750
SW-29	GP9	198+10	198+36	LT	446
SW-30	GP9	198+57	198+85	LT	402
SW-31	GP9	198+57	198+86	RT	511
SW-32	GP9	200+50	200+82	LT	152
SW-33	GP9	200+86	200+97	LT	75
SW-34	GP9	201+52	201+84	LT	57
SW-35	GP9-GP10	201+84	203+24	LT	1190
SW-36	GP10	203+24	203+77	LT	732
SW-37	GP10	203+13	203+76	RT	1290
SW-38	GP10	203+98	204+35	LT	652
SW-39	GP10	203+98	204+18	RT	352
SW-40	GP10	206+00	206+35	RT	405
SW-41	GP10	206+61	206+84	RT	225
SW-42	GP10-GP11	206+83	207+05	LT	400
TOTALS CARRIED TO SUB-SUMMARY					27710

CALCULATED JMK/HEH
CHECKED WLC

ESTIMATED QUANTITIES

WALNUT & CHERRY COMPLETE STREET BIKE LANES

GQ 4

R:\Stark\SARTA\Task 3 Canton\STA\91592\roadway\sheets\91592GQ004.dgn 2/3/2012 8:11:22 AM jroth

REF. NO.	SHEET NO.	STATION (ALL STATIONS REFERENCE WALNUT AVENUE UNLESS OTHERWISE NOTED) FROM	TO	SIDE	690 SPECIAL - MISC.: TYPICAL MAJOR BRT STOP WITH BUS SHELTER EACH	690 SPECIAL - MISC.: TYPICAL MINOR BRT STOP WITHOUT BUS SHELTER EACH	690 SPECIAL - MISC.: PARKING METER EACH
M-1	19	189+40		RT			1
M-2	19	189+54		RT			1
M-3	19	189+68		RT			1
M-4	19	191+24		RT			1
M-5	19	191+38		RT			1
M-6	19	191+52		RT			1
M-7	20	194+59		RT			1
M-8	20	194+73		RT			1
M-9	20	194+87		RT			1
M-10	20	195+01		RT			1
M-11	20	196+53		RT			1
M-12	20	196+67		RT			1
M-13	20	196+81		RT			1
M-14	20	196+97		RT			1
M-15	21	199+03		RT			1
M-16	21	199+17		RT			1
M-17	21	199+31		RT			1
M-18	21	199+45		RT			1
M-19	21	199+59		RT			1
M-20	21	199+73		RT			1
M-21	21	199+87		RT			1
M-22	21	200+01		RT			1
M-23	21	200+15		RT			1
M-24	22	202+12		RT			1
M-25	22	202+26		RT			1
M-26	22	202+52		RT			1
M-27	22	202+66		RT			1
M-28	22	202+82		RT			1
M-29	22	202+96		RT			1
M-30	22	203+08		RT			1
M-31	23	207+22		LT			1
M-32	23	207+36		LT			1
M-33	23	207+50		LT			1
M-34	23	207+64		LT			1
M-35	23	207+78		LT			1
M-36	23	207+92		LT			1
M-37	23	208+10		LT			1
M-38	23	208+20		LT			1
M-39	23	208+34		LT			1
M-40	23	208+50		LT			1
B-1	GP2	162+30		RT	1		
B-2	GP4-GP5	176+80		RT		1	
B-3	GP6	183+90		RT		1	
B-4	GP6-GP7	186+91		RT	1		
B-5	GP8	193+80		RT		1	
B-6	GP12	134+89		RT		1	
B-7	GP12	140+10		RT		1	
B-8	GP12	150+49		RT	1		
B-9	GP12	155+10		RT		1	
B-10	GP13	168+85		RT		1	
TOTALS CARRIED TO SUB-SUMMARY					3	7	40

CALCULATED JMK/HEH
CHECKED WLC

ESTIMATED QUANTITIES

WALNUT & CHERRY COMPLETE STREET BIKE LANES

GQ 5

R:\Stark\SARTA\Task 3 Canton\STA\91592\roadway\sheets\91592GQ005.dgn 2/3/2012 8:12:10 AM jroth

REF. NO.	SHEET NO.	STATION (ALL STATIONS REFERENCE WALNUT AVENUE UNLESS OTHERWISE NOTED) FROM	TO	SIDE	603 12" CONDUIT, TYPE C FT	603 18" CONDUIT, TYPE B FT	603 18" CONDUIT, TYPE C FT	604 CATCH BASIN, NO. 3A EACH	604 CATCH BASIN ADJUSTED TO GRADE, AS PER PLAN EACH	604 MANHOLE, NO. 3 EACH	604 MANHOLE ADJUSTED TO GRADE EACH
AJ-2	19	188+47		RT							1
AJ-3	19	190+95		RT							1
AJ-4	19	191+95		RT							1
AJ-5	21	198+22		RT							1
AJ-6	21	198+88		RT					1		
AJ-7	22	203+26		RT							1
AJ-8	22	203+63		RT							1
AJ-9	22	206+93		RT							1
A-1	16	176+12		RT				1			
A-2	19	188+26		RT				1			
A-3	19	188+29		RT						1	
A-4	19	189+87		RT				1			
A-5	19	190+23		RT						1	
A-6	19	190+46		RT						1	
A-7	19	190+49		RT				1			
A-8	19	190+80		RT				1			
A-9	20	192+87		RT				1			
A-10	20	192+88		RT						1	
A-11	20	195+10		RT				1			
A-12	20	195+51		RT						1	
A-13	21	198+06		RT						1	
A-14	21	198+07		RT				1			
A-15	21	198+64		RT				1			
A-16	21	198+67		RT						1	
A-17	21	200+24		RT				1			
A-18	21	200+73		RT						1	
A-19	21	201+43		RT				1			
A-20	22	203+18		RT				1			
A-21	22	203+40		RT						1	
P-1	19	188+26	188+30	RT		5					
P-2	19	190+46	190+49	RT			5				
P-3	19	190+74	190+80	RT		11					
P-4	21	198+06		RT	5						
P-5	21	198+64	198+67	RT	5						
TOTALS CARRIED TO GENERAL SUMMARY					10	16	5	12	1	9	7

604 MANHOLE ADJUSTED TO GRADE EACH										
7	0	0	0	0						

CALCULATED JMK/HEH
CHECKED WLC

ESTIMATED QUANTITIES

WALNUT & CHERRY COMPLETE STREET BIKE LANES

GQ 6

R:\Stark\SARTA\Task 3 Canton\STA\91592\roadway\sheets\91592GQ006.dgn 2/3/2012 8:04:43 AM jroth

REF. NO.	SHEET NO.	STATION (ALL STATIONS REFERENCE WALNUT AVENUE UNLESS OTHERWISE NOTED) FROM	TO	SIDE	609 CURB, TYPE 6 FT
C-1	GP1-GP2	160+30	162+55	LT	225
C-2	GP1	160+40	161+91	RT	161
C-4	GP2	162+01	162+80	RT	89
C-5	GP4-GP5	176+30	177+35	RT	102
C-6	GP6	183+15	184+65	RT	177
C-0	GP6	186+16	187+66	RT	152
C-7	GP7	187+71	20+48 6TH ST. NE	LT	53
C-8	GP7	19+35 6TH ST. NE	188+58	RT	101
C-9	GP7	190+25	30+55 5TH ST. NE	LT	47
C-10	GP7	30+53 5TH ST. NE	190+97	LT	50
C-11	GP7	190+07	29+40 5TH ST. NE	RT	104
C-12	GP7	29+59 5TH ST. NE	191+14	RT	85
C-13	GP7-GP8	29+72	39+54 4TH ST. NE	RT	177
C-14	GP8	192+90	40+58 4TH ST. NE	LT	55
C-15	GP8	40+57 4TH ST. NE	193+60	LT	47
C-16	GP8	39+54 4TH ST. NE	194+75	RT	181
C-17	GP8	195+54	50+56 3RD ST. NE	LT	43
C-18	GP8	50+56 3RD ST. NE	196+20	LT	52
C-19	GP8	195+30	49+58 3RD ST. NE	RT	91
C-20	GP8	49+45 3RD ST.	196+35	RT	92
C-21	GP9	198+10	60+56 2ND ST. NE	LT	56
C-22	GP9	60+54 2ND ST. NE	198+85	LT	52
C-23	GP9	197+06	59+45 2ND ST. NE	RT	170
C-24	GP9	59+59 2ND ST. NE	198+86	RT	75
C-25	GP9	200+50	70+48 E. TUSC. ST.	LT	60
C-26	GP9-GP10	70+57 E. TUSC. ST.	80+55 2ND ST. SE	LT	259
C-27	GP10	80+55 2ND ST. SE	204+35	LT	68
C-28	GP10	203+13	79+54 2ND ST. SE	RT	107
C-29	GP10	79+54 2ND ST. SE	204+30	RT	59
C-30	GP10	205+94	89+57 3RD ST. SE	RT	62
C-31	GP10-GP11	89+57 3RD ST. SE	207+00	RT	61
C-32	GP10-GP11	207+04	207+03	LT	88
C-33	GP12	134+62 CHERRY ST.	135+16 CHERRY ST.	RT	54
C-34	GP12	139+83 CHERRY ST.	140+37 CHERRY ST.	RT	54
C-35	GP12	150+22 CHERRY ST.	150+76 CHERRY ST.	RT	54
C-36	GP12	154+83 CHERRY ST.	155+37 CHERRY ST.	RT	54
C-37	GP13	168+58 CHERRY ST.	169+12 CHERRY ST.	RT	54
TOTALS CARRIED TO GENERAL SUMMARY					3471

0	0	0	0	0	0	0	0	0	0	0	0	0	0								

CALCULATED JMK/HEH
CHECKED WLC

ESTIMATED QUANTITIES

WALNUT & CHERRY COMPLETE STREET BIKE LANES

GQ 7

R:\Stark\SARTA\Task 3 Canton\STA\91592\roadway\sheets\91592GQ007.dgn 2/3/2012 8:13:09 AM jroth

REF. NO.	SHEET NO.	STATION FROM (ALL STATIONS REFERENCE WALNUT AVENUE UNLESS OTHERWISE NOTED)	STATION TO	SIDE		625 LIGHT POLE, DECORATIVE EACH
DL-1	13	160+87		RT		1
DL-2	13	161+41		LT		1
DL-3	13	161+80		RT		1
DL-4	19	189+46		RT		1
DL-5	20	192+69		RT		1
DL-6	20	194+55		RT		1
DL-7	21	199+82		RT		1
TOTALS CARRIED TO GENERAL SUMMARY					0	7

CALCULATED JMK/HEH
CHECKED WLC

ESTIMATED QUANTITIES

WALNUT & CHERRY COMPLETE STREET BIKE LANES

GQ 8

R:\Stark\SARTA\Task 3 Canton\STA\91592\roadway\sheets\91592GQ008.dgn 2/3/2012 8:06:19 AM jroth

BENCHMARK#13 (XXX)
CHISELED "+" ON NORTHEAST ANCHOR BOLT ON TRAFFIC SIGNAL POLE AT SOUTHEAST CORNER OF 12TH ST. AND WALNUT AVE. NE @STA. 160+32.38, 28.28' LEFT ℄ WALNUT AVE.
ELEV. 1078.59

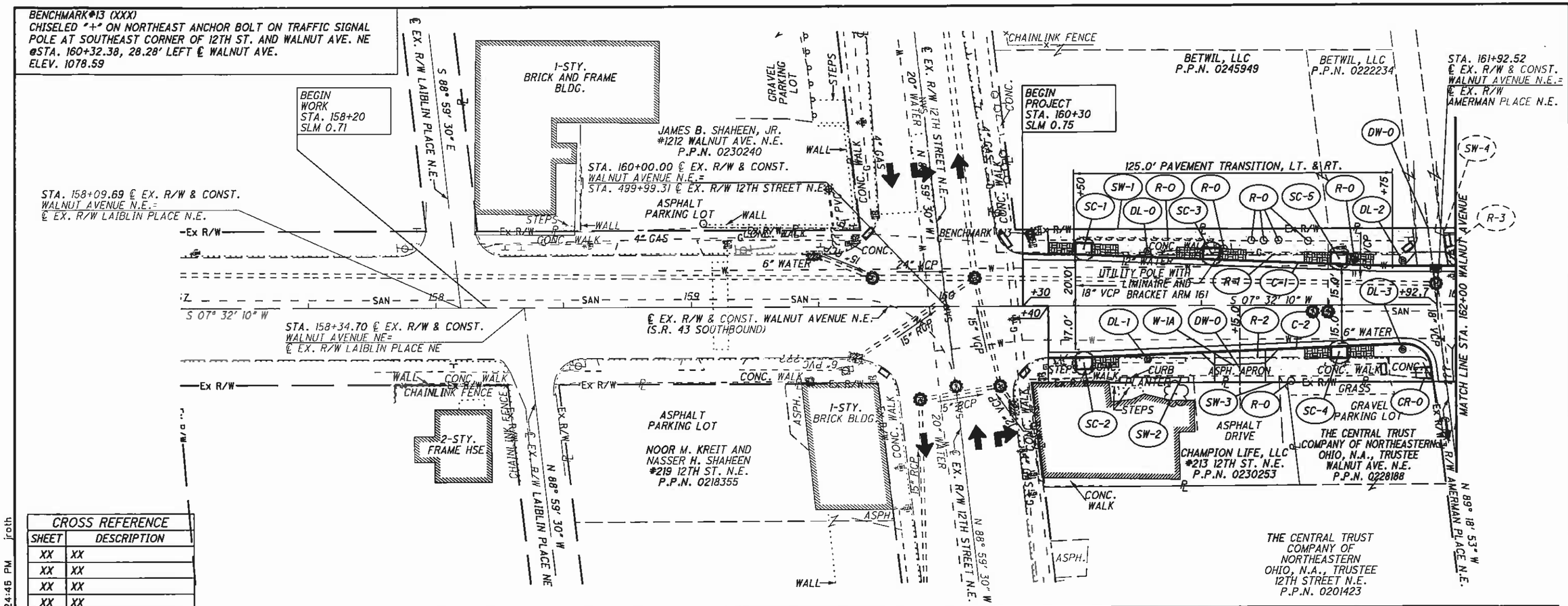

CROSS REFERENCE	
SHEET	DESCRIPTION
XX	XX
XX	XX
XX	XX
XX	XX

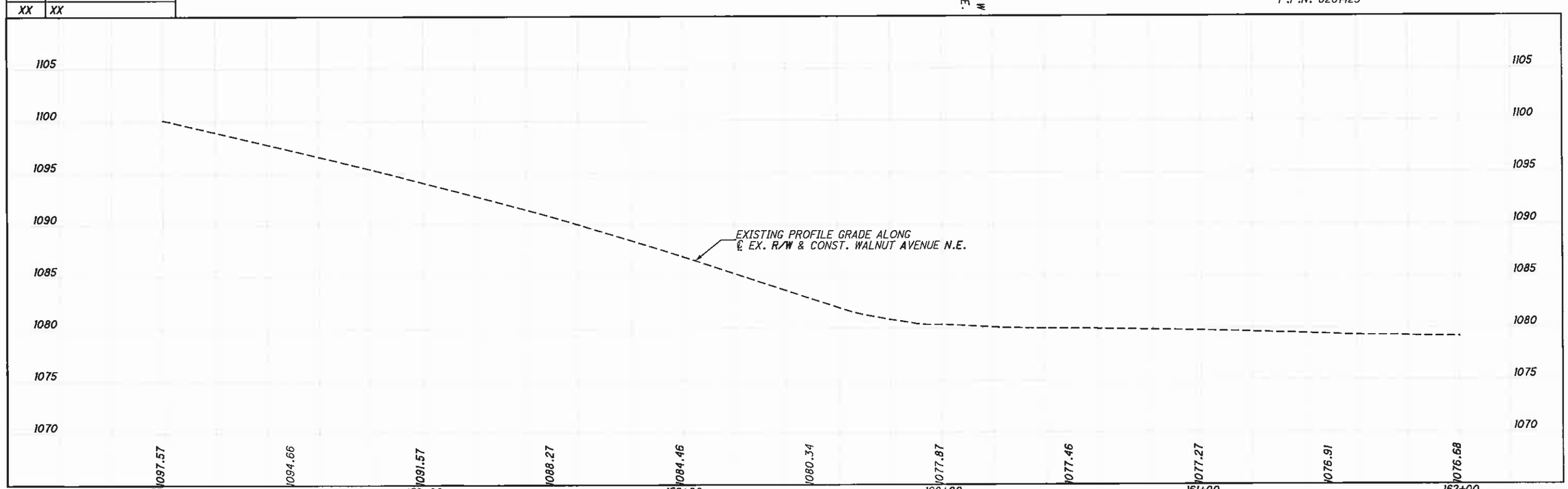

HORIZONTAL SCALE IN FEET 0 10 20 40

CALCULATED JMK/HEH
CHECKED WLC

PROFILE - WALNUT AVENUE
STA. 157+00 TO STA. 162+00

PLAN AND PROFILE

WALNUT & CHERRY COMPLETE STREET BIKE LANES

GP 1

R:\Slark\SARTA\Task 3 Canton\STA\91592\roadway\sheets\91592GP001.dgn 2/2/2012 4:24:45 PM jroth

BENCHMARK#14 (SV2131)
CHISELED "□" ON NORTHWEST CORNER OF FIRST STEP OF CONCRETE STEPS TO COMMUNITY LIFE CHURCH ON EAST SIDE OF WALNUT AVE. NE @STA. 165+61.88, 28.89' LEFT ℄ WALNUT AVE.
ELEV. 1075.25

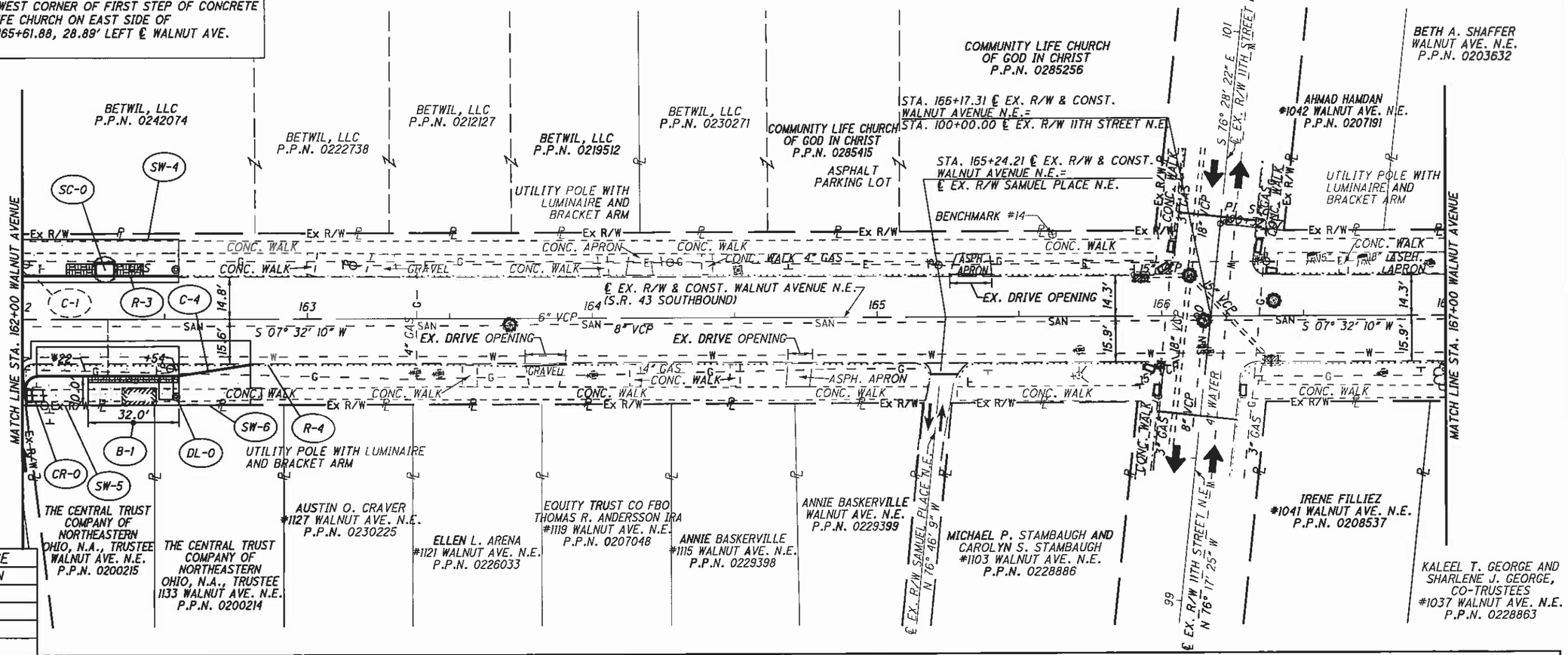

CROSS REFERENCE	
SHEET	DESCRIPTION
XX	XX
XX	XX
XX	XX
XX	XX

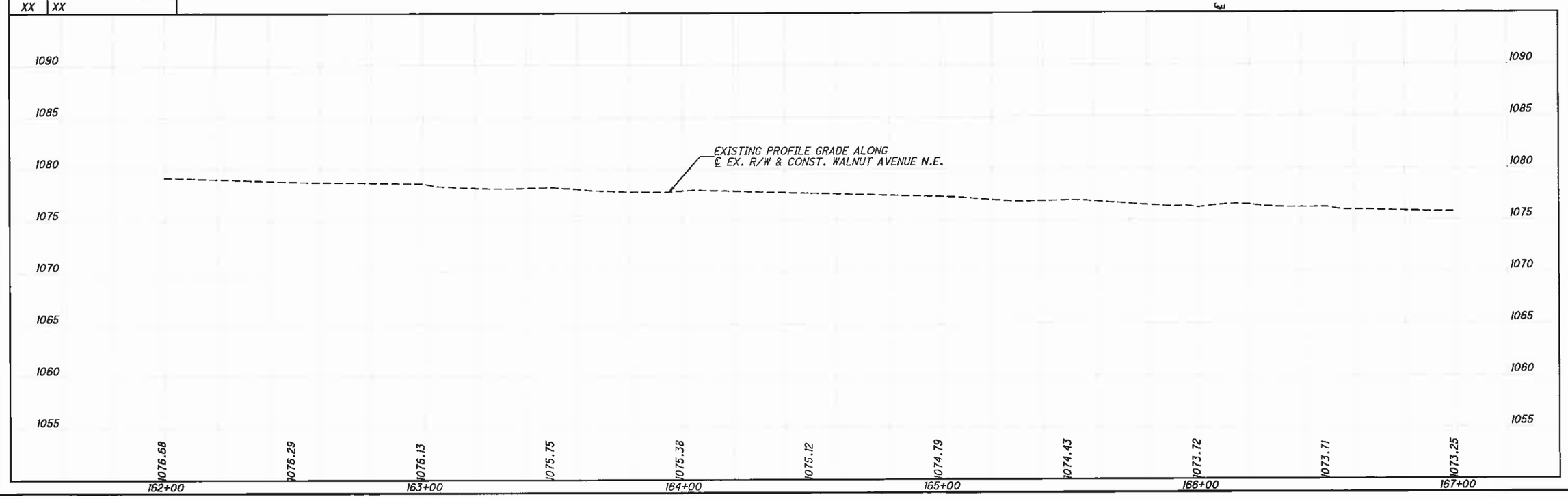

HORIZONTAL SCALE IN FEET 0 10 20 40

CALCULATED JMK/HEM
CHECKED WLC

PLAN AND PROFILE - WALNUT AVENUE
STA. 162+00 TO STA. 167+00

WALNUT & CHERRY COMPLETE STREET BIKE LANES

GP 2

R:\Stark\SARTA\Task 3 Canton\STA\91592\roadway\sheets\91592GP002.dgn 2/2/2012 4:25:10 PM jroth

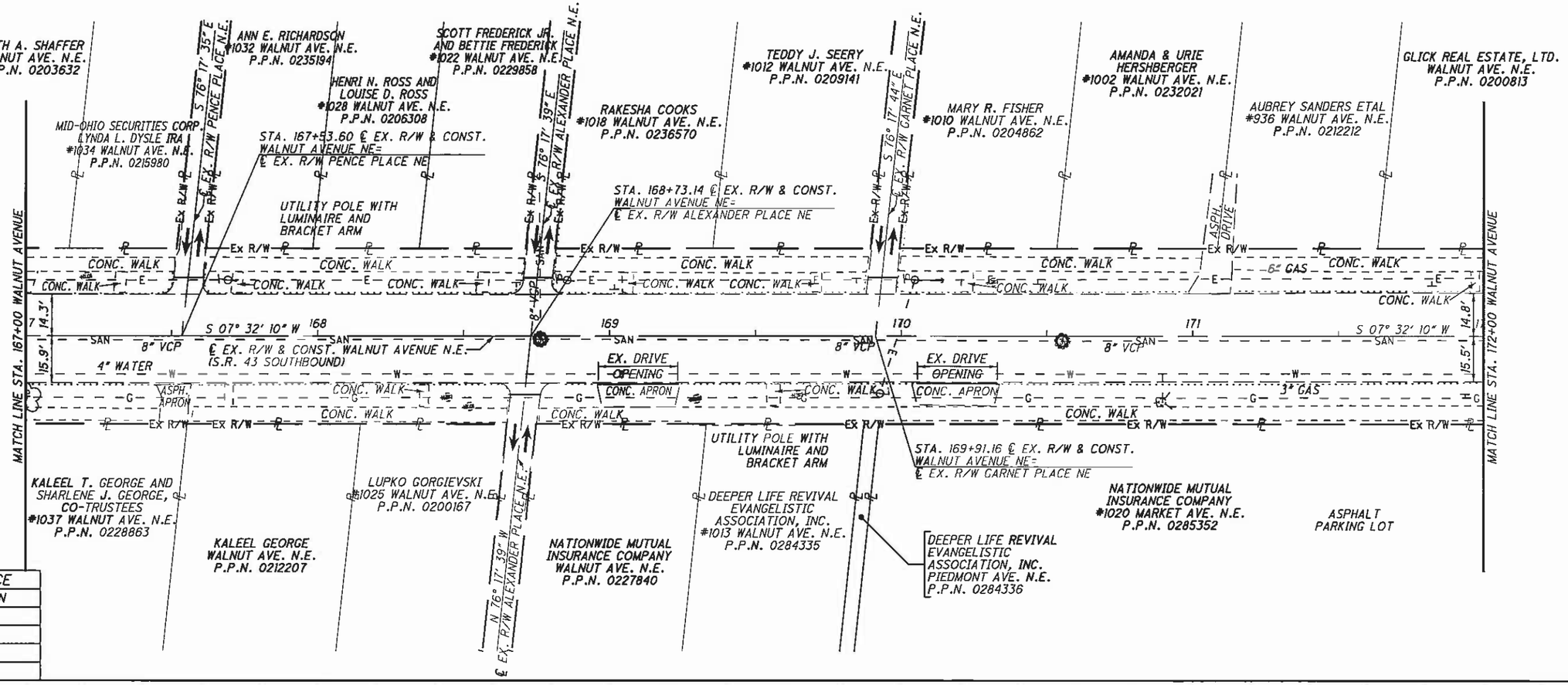

CROSS REFERENCE	
SHEET	DESCRIPTION
XX	XX
XX	XX
XX	XX
XX	XX
XX	XX

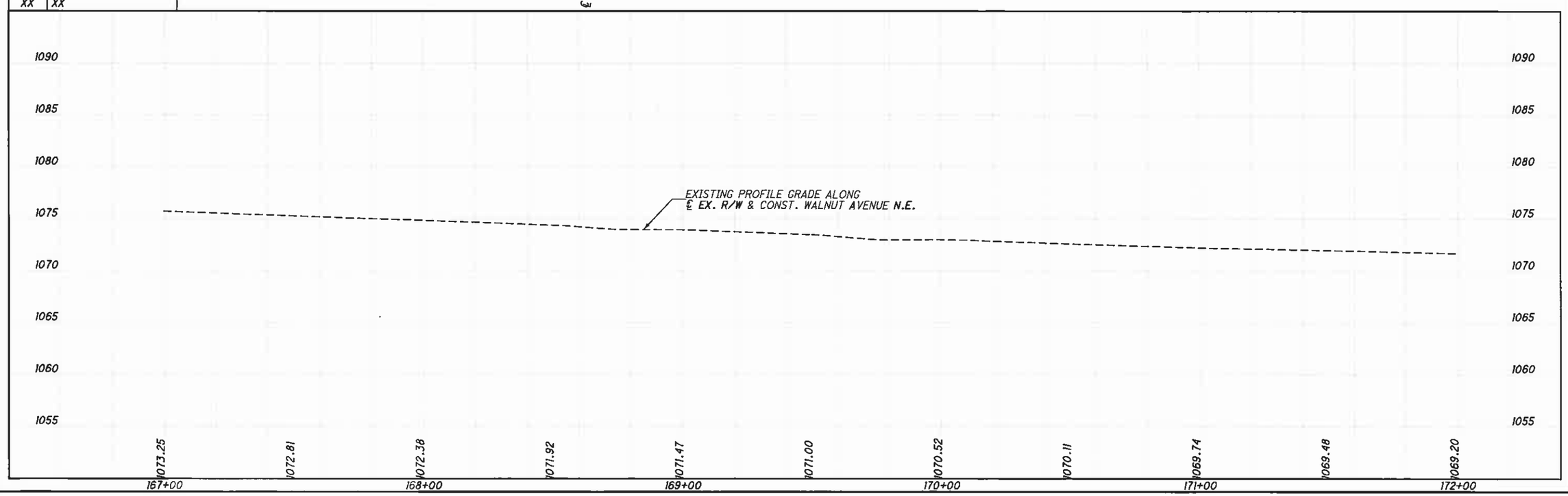

HORIZONTAL SCALE IN FEET 0 10 20 40

CALCULATED JMK/HEH
CHECKED WLC

PLAN AND PROFILE - WALNUT AVENUE
STA. 167+00 TO STA. 172+00

WALNUT & CHERRY
COMPLETE STREET
BIKE LANES

GP 3

R:\Stark\SARTA\Task 3 Canton\STA\91592\roadway\sheets\91592GP003.dgn 2/2/2012 4:25:36 PM jroth

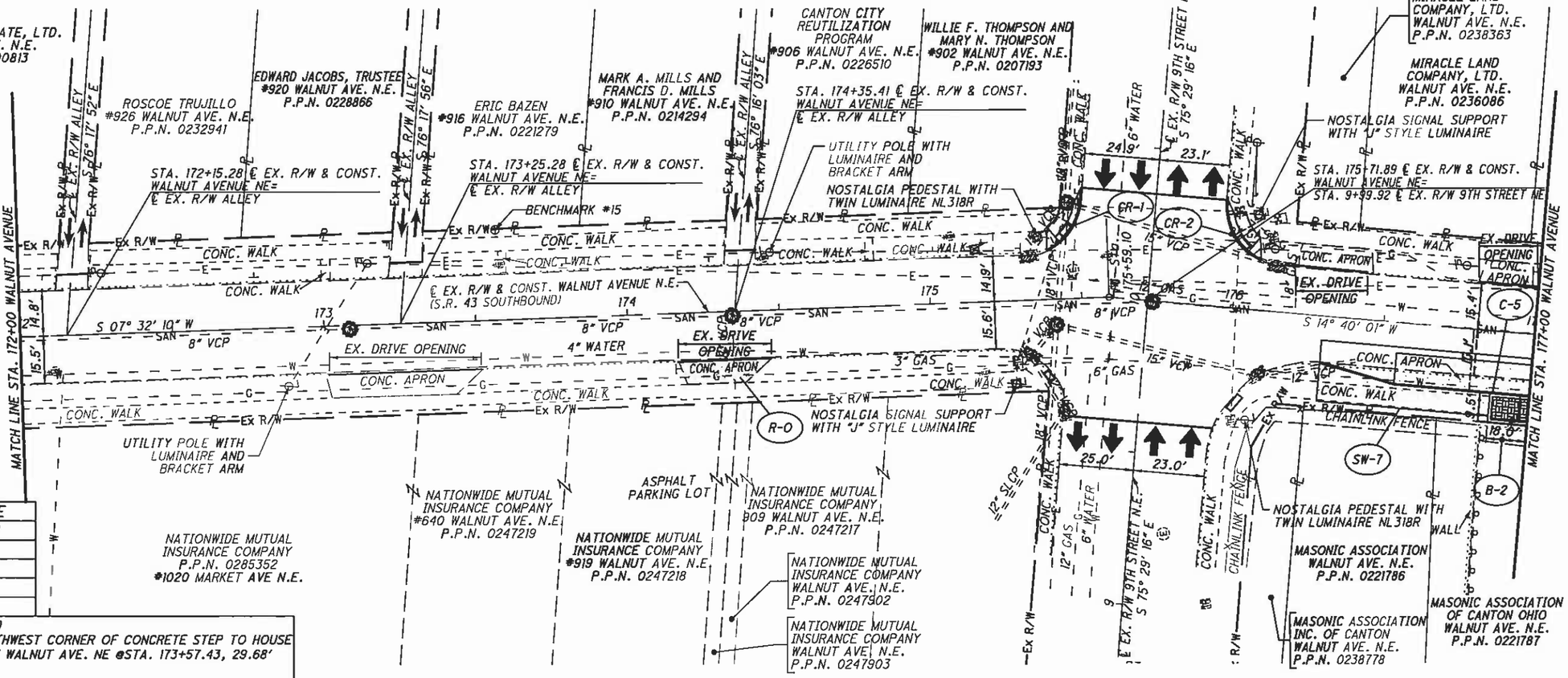

CROSS REFERENCE	
SHEET	DESCRIPTION
XX	XX
XX	XX
XX	XX
XX	XX

BENCHMARK #15 (SV1630)
CHISELED "□" ON NORTHWEST CORNER OF CONCRETE STEP TO HOUSE
#916 ON EAST SIDE OF WALNUT AVE. NE @STA. 173+57.43, 29.68'
LEFT ℄ WALNUT AVE.
ELEV. 1068.93

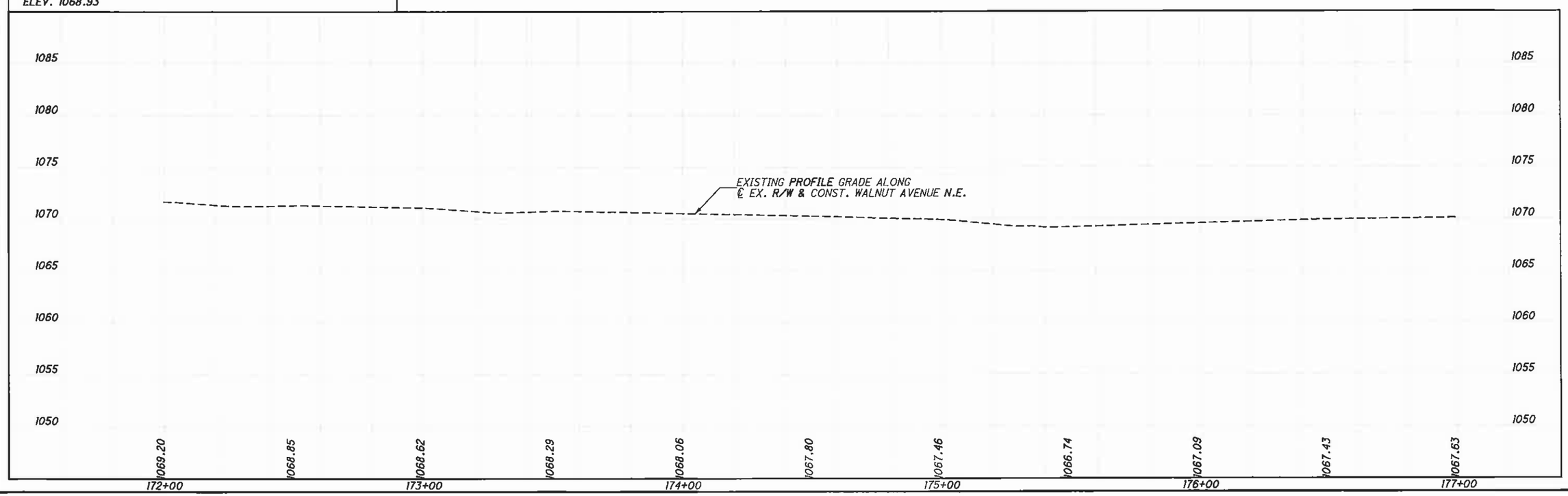

CALCULATED JMK/HEH
CHECKED WLC

HORIZONTAL SCALE IN FEET 0 10 20 40

PLAN AND PROFILE - WALNUT AVENUE
STA. 172+00 TO STA. 177+00

WALNUT & CHERRY
COMPLETE STREET
BIKE LANES

GP 4

R:\Slark\SARTA\Task 3 Canton\STA\91592\roadway\sheets\91592GP004.dgn 2/2/2012 4:25:58 PM jrolh

BENCHMARK #16 (SV5786)
CHISELED "□" ON NORTHEAST CORNER ON TOP OF WALL ON SOUTH PROPERTY LINE OF MASONIC TEMPLE WEST SIDE OF WALNUT AVE. NE @STA. 179+20.10, 29.81' RIGHT ℄ WALNUT AVE.
ELEV. 1071.86

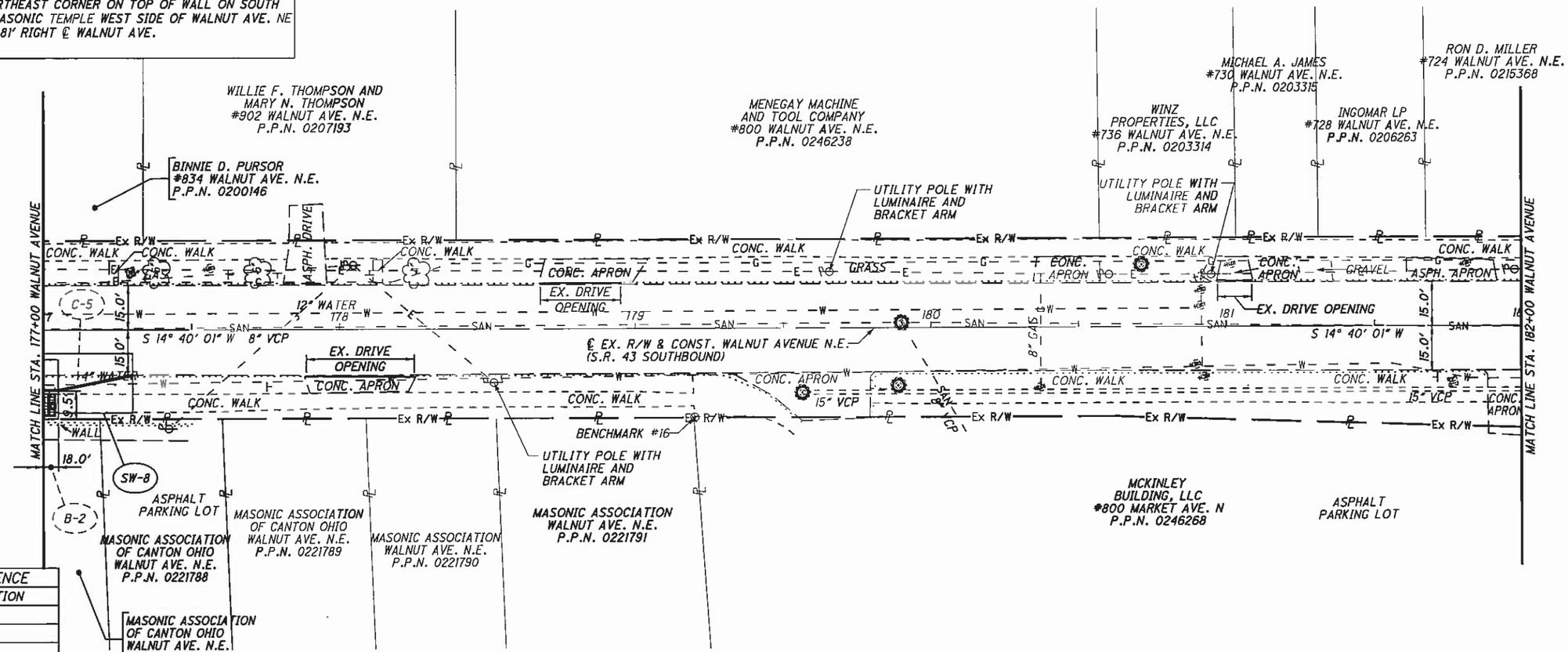

CROSS REFERENCE	
SHEET	DESCRIPTION
XX	XX
XX	XX
XX	XX
XX	XX

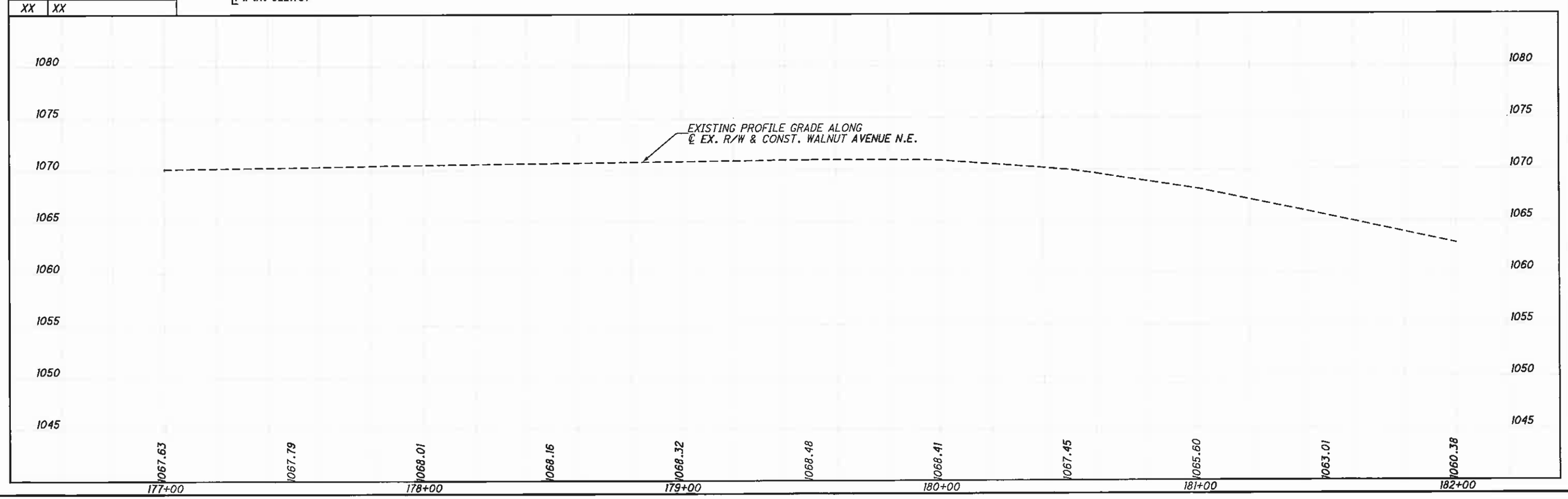

CALCULATED JMK/HEH
CHECKED WLC

HORIZONTAL SCALE IN FEET 0 10 20 40

PLAN AND PROFILE - WALNUT AVENUE
STA. 177+00 TO STA. 182+00

WALNUT & CHERRY COMPLETE STREET BIKE LANES

GP 5

R:\Stark\SART\A\Task 3 Canton\STA\91592\roadway\sheets\91592GP005.dgn 2/2/2012 4:26:20 PM jroth

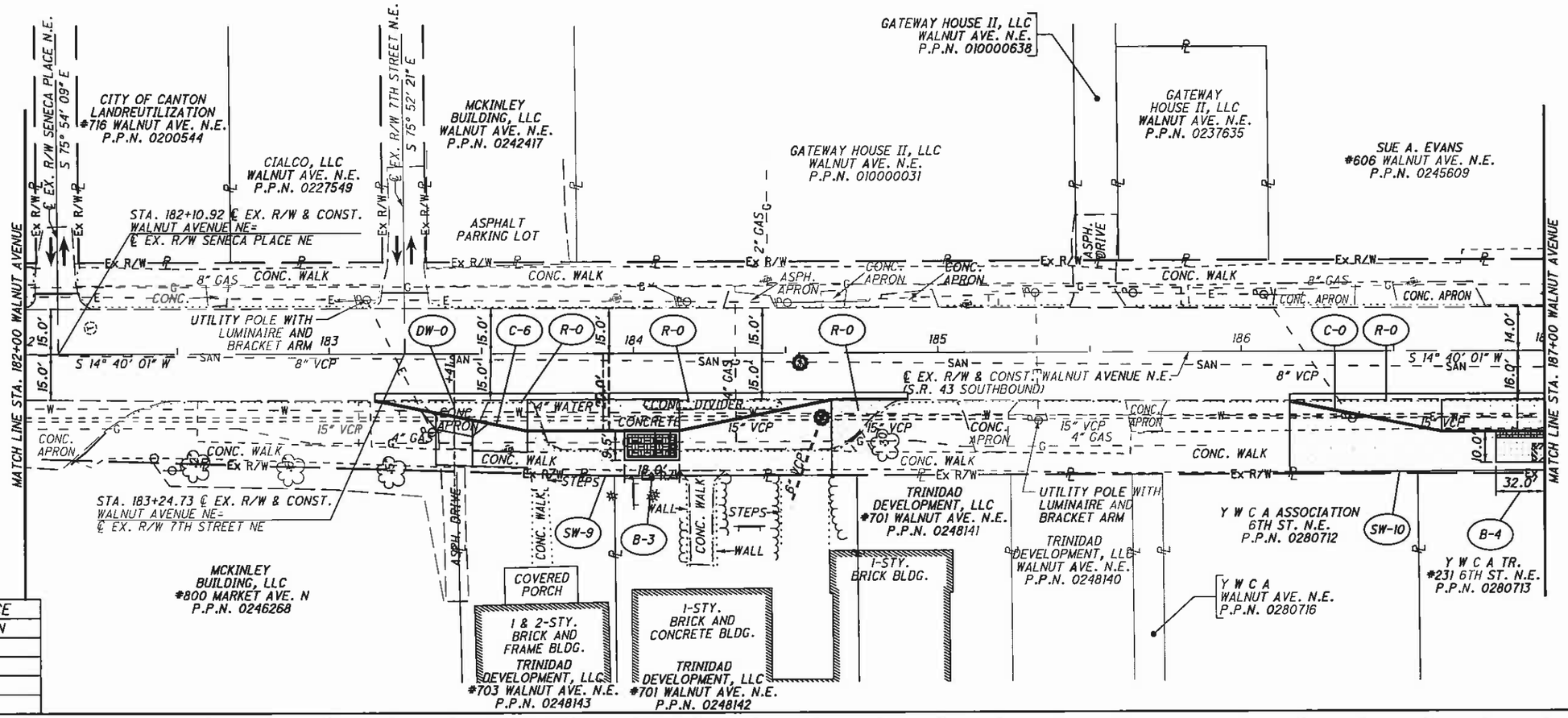

CROSS REFERENCE	
SHEET	DESCRIPTION
XX	XX
XX	XX
XX	XX
XX	XX

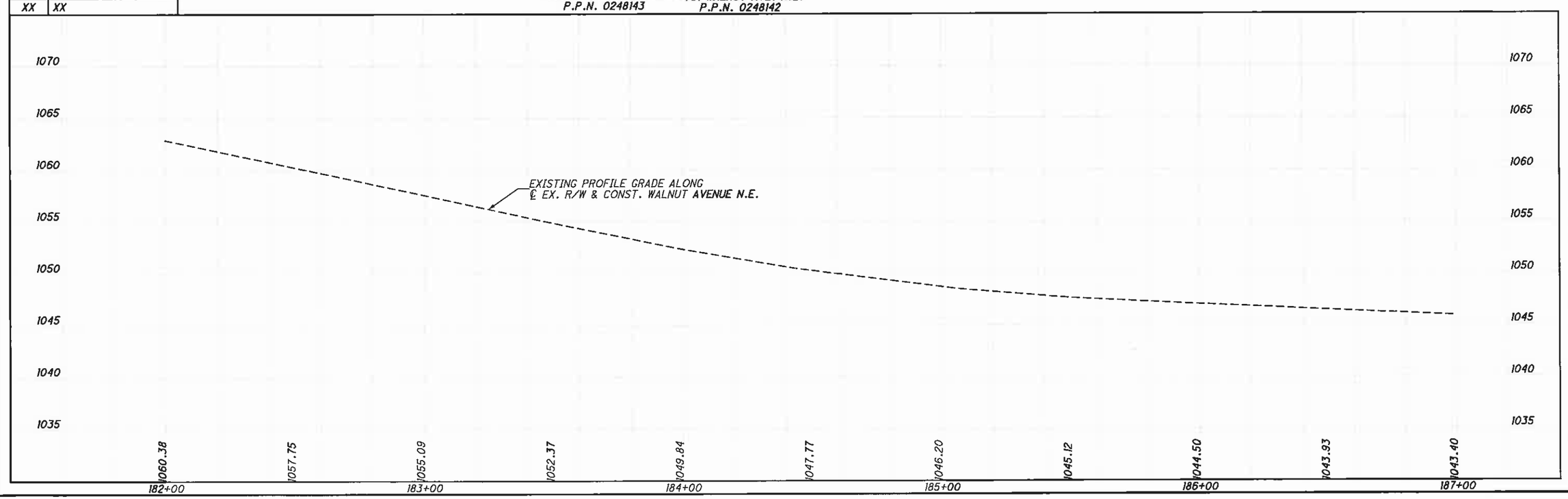

HORIZONTAL SCALE IN FEET 0 10 20 40

CALCULATED JMK/HEH
CHECKED WLC

PLAN AND PROFILE - WALNUT AVENUE
STA. 182+00 TO STA. 187+00

WALNUT & CHERRY
COMPLETE STREET
BIKE LANES

GP 6

R:\Stark\SARTA\Task 3 Canton\STA\91592\roadway\sheets\91592GP006.dgn 2/2/2012 4:26:39 PM jroth

BENCHMARK#17 (SV627)
CHISELED "□" ON NORTHEAST CORNER ON TOP OF CONCRETE CURB ON EAST SIDE OF YMCA AT NORTHWEST CORNER OF SIXTH ST. NE AND WALNUT AVE. NE. @STA. 187+64.39, 39.04' RIGHT ℄ WALNUT AVE. ELEV. 1043.43

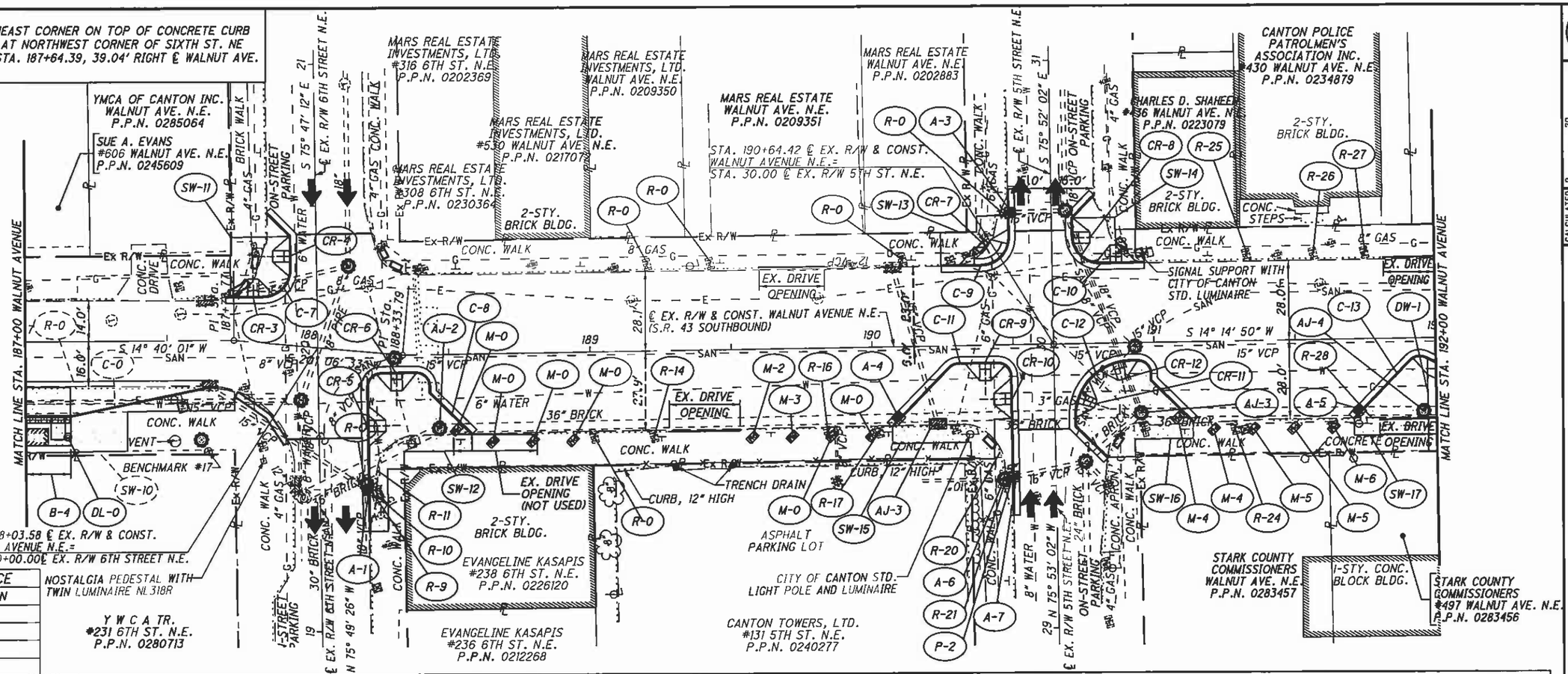

CROSS REFERENCE	
SHEET	DESCRIPTION
XX	XX
XX	XX
XX	XX
XX	XX

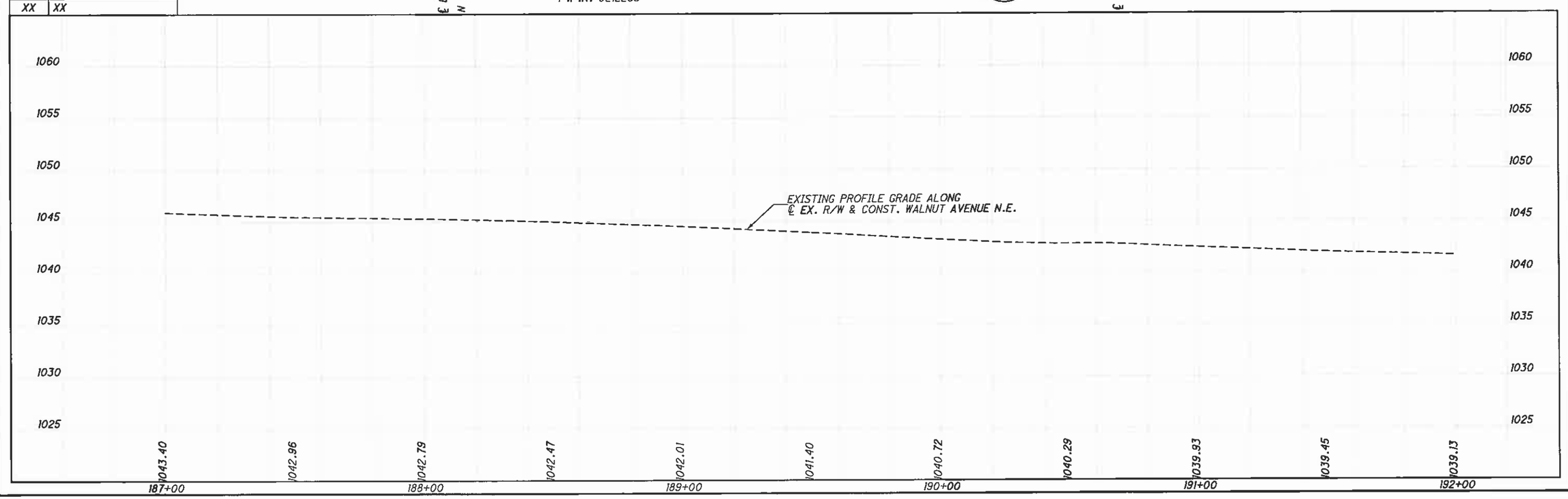

CALCULATED JMK/HEH
CHECKED WLC
HORIZONTAL SCALE IN FEET 0 10 20 40

PLAN AND PROFILE - WALNUT AVENUE
STA. 187+00 TO STA. 192+00

WALNUT & CHERRY COMPLETE STREET BIKE LANES

GP 7

R:\Stark\SARTA\Task 3 Canton\STA\91592\roadway\sheets\91592GP007.dgn 2/2/2012 4:26:59 PM jroth

BENCHMARK#18 (SV3354)
CITY OF CANTON BENCHMARK IN SIDEWALK ON NORTHWEST CORNER OF THIRD ST. NE AND WALNUT AVE. NE @STA. 195+61.68, 38.98' RIGHT ℄ WALNUT AVE.
ELEV. 1037.13

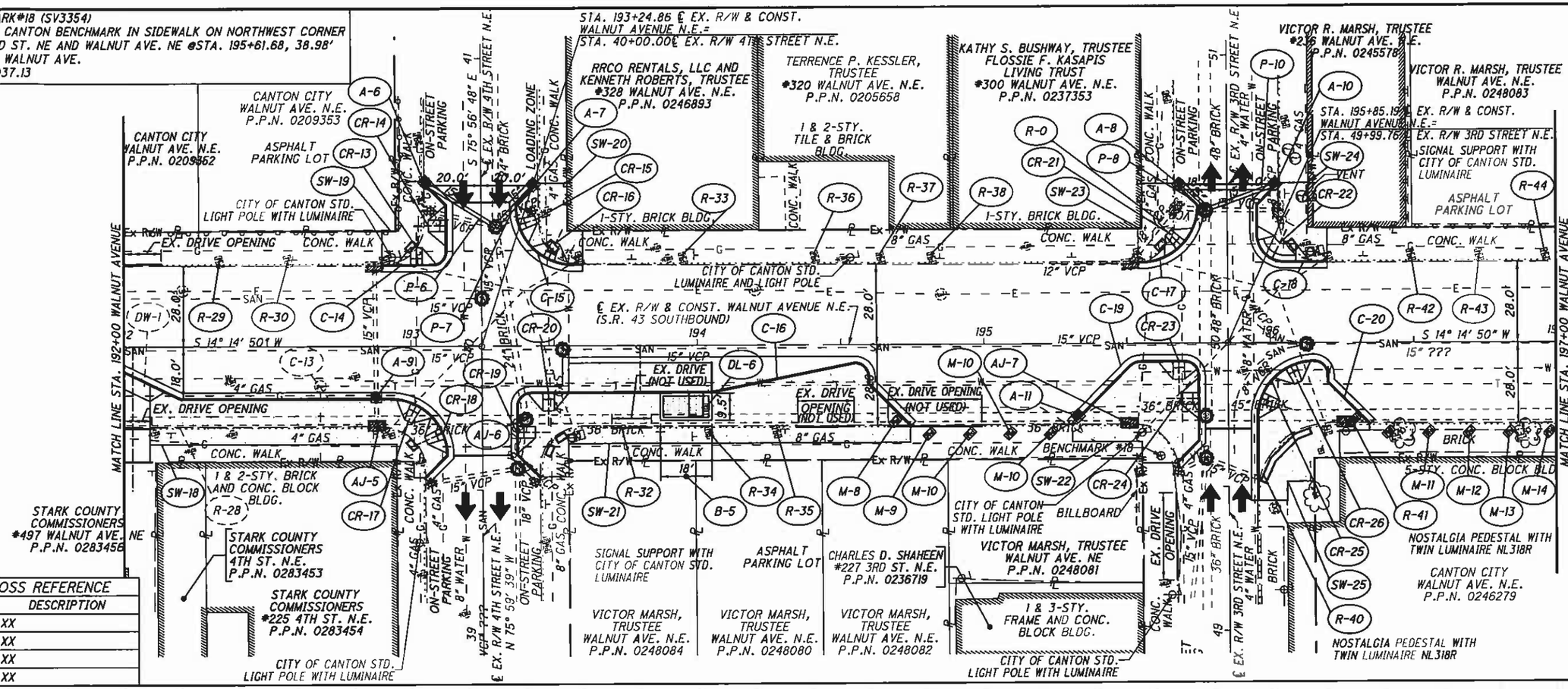

CROSS REFERENCE	
SHEET	DESCRIPTION
XX	XX
XX	XX
XX	XX
XX	XX

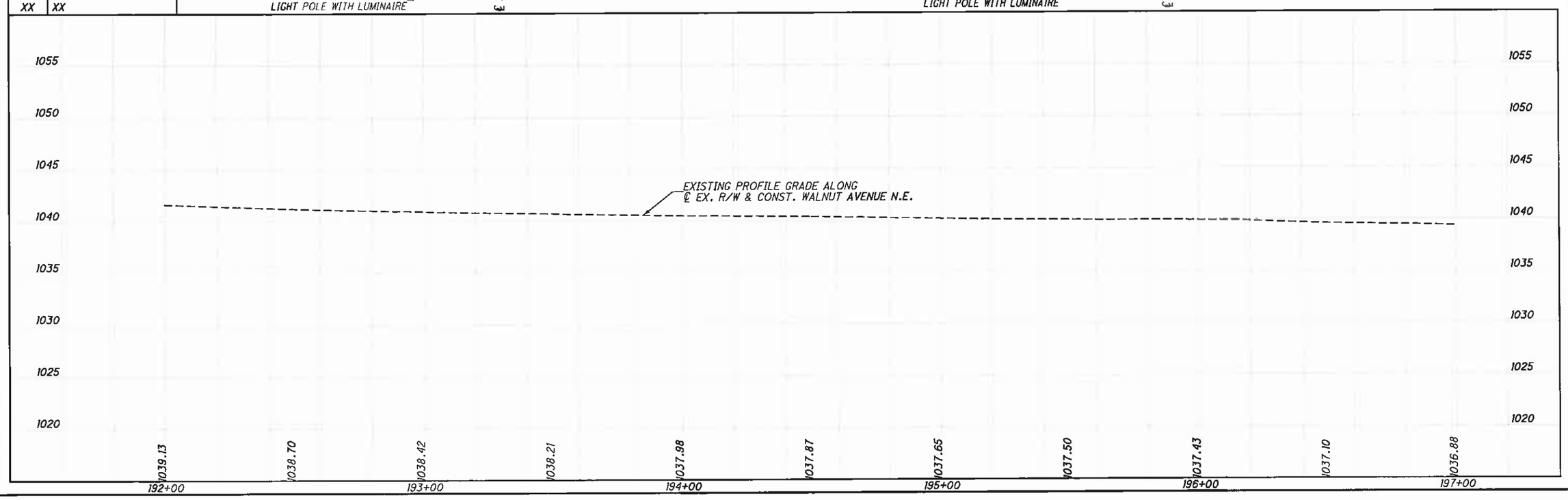

CALCULATED JMK/HEH
CHECKED WLC
HORIZONTAL SCALE IN FEET 0 10 20 40

PLAN AND PROFILE - WALNUT AVENUE
STA. 192+00 TO STA. 197+00

WALNUT & CHERRY COMPLETE STREET BIKE LANES

GP 8

R:\Stark\SARTA\Task 3 Canton\STA\91592\roadway\sheets\91592GP008.dgn 2/2/2012 4:27:20 PM jroth

BENCHMARK #19 (SV4081)
CHISELED "□" ON CORNER OF SIDEWALK ON SOUTHEAST CORNER OF TUSCARAWAS @STA. 201+56.60, 40.11' LEFT ℄ WALNUT AVE.
ELEV. 1037.55

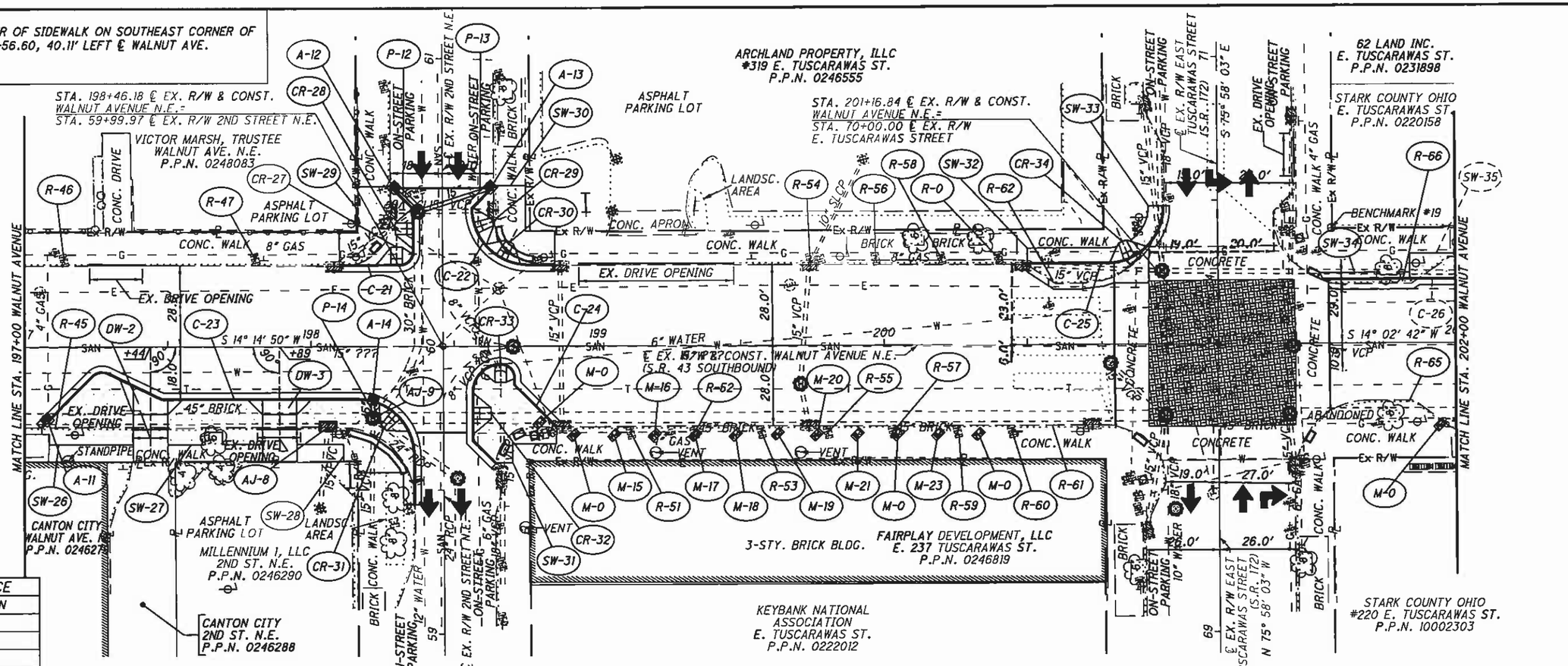

CROSS REFERENCE	
SHEET	DESCRIPTION
XX	XX
XX	XX
XX	XX
XX	XX

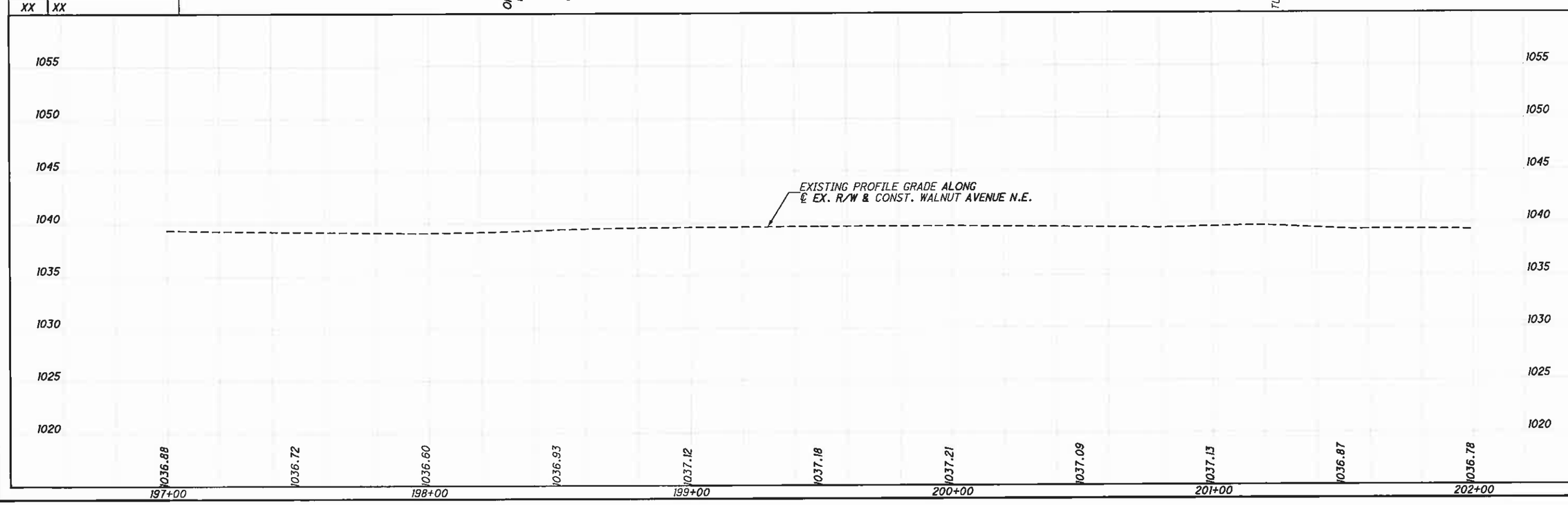

HORIZONTAL SCALE IN FEET 0 10 20 40

CALCULATED JMK/HEH
CHECKED WLC

PLAN AND PROFILE - WALNUT AVENUE
STA. 197+00 TO STA. 202+00

WALNUT & CHERRY COMPLETE STREET BIKE LANES

GP 9

R:\Stark\SARTA\Task 3 Canton\STA\91592\roadway\sheets\91592GP009.dgn 2/2/2012 4:27:41 PM jroth

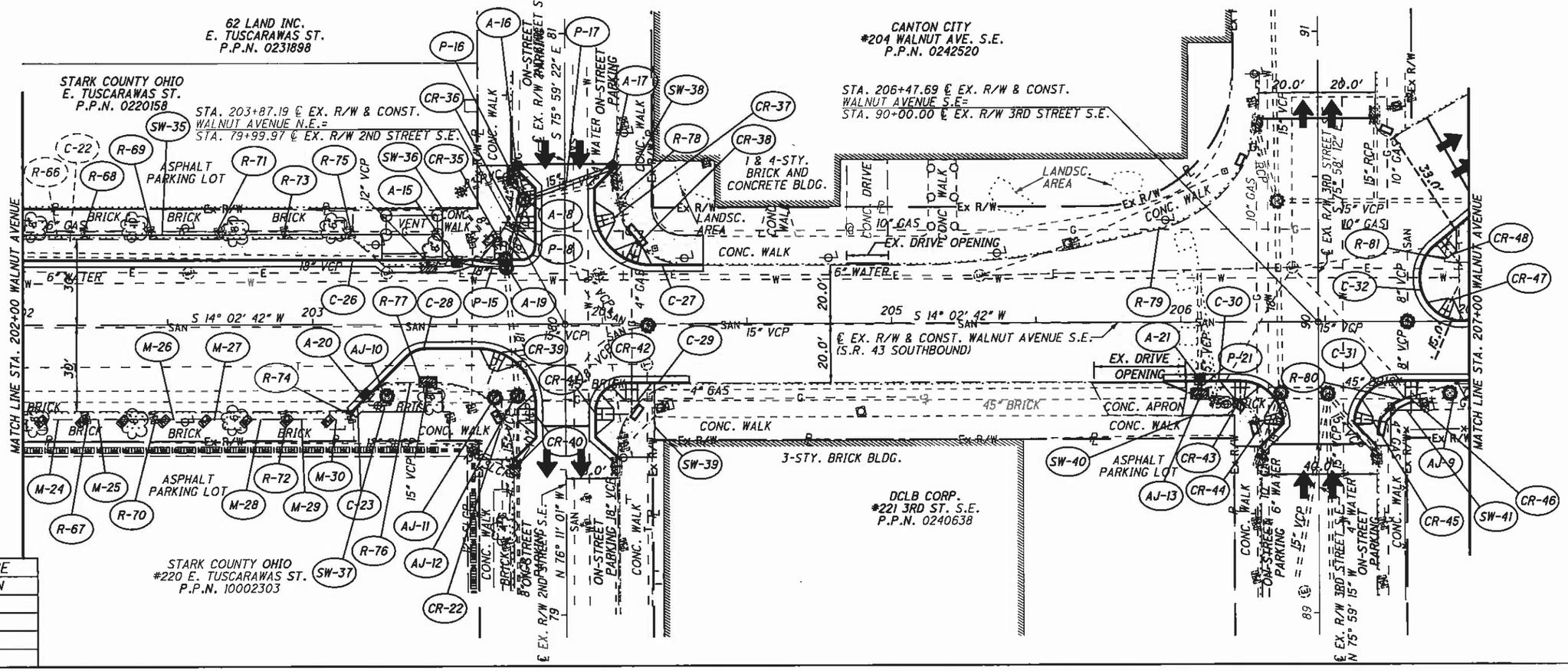

CROSS REFERENCE	
SHEET	DESCRIPTION
XX	XX
XX	XX
XX	XX
XX	XX

CALCULATED JMK/HEH
CHECKED WLC

HORIZONTAL SCALE IN FEET 0 10 20 40

PLAN AND PROFILE - WALNUT AVENUE
STA. 202+00 TO STA. 207+00

WALNUT & CHERRY COMPLETE STREET BIKE LANES

GP 10

R:\Stark\SARTA\Task 3 Canton\STA\91592\roadway\sheets\91592GP010.dgn 2/2/2012 4:27:59 PM jroth

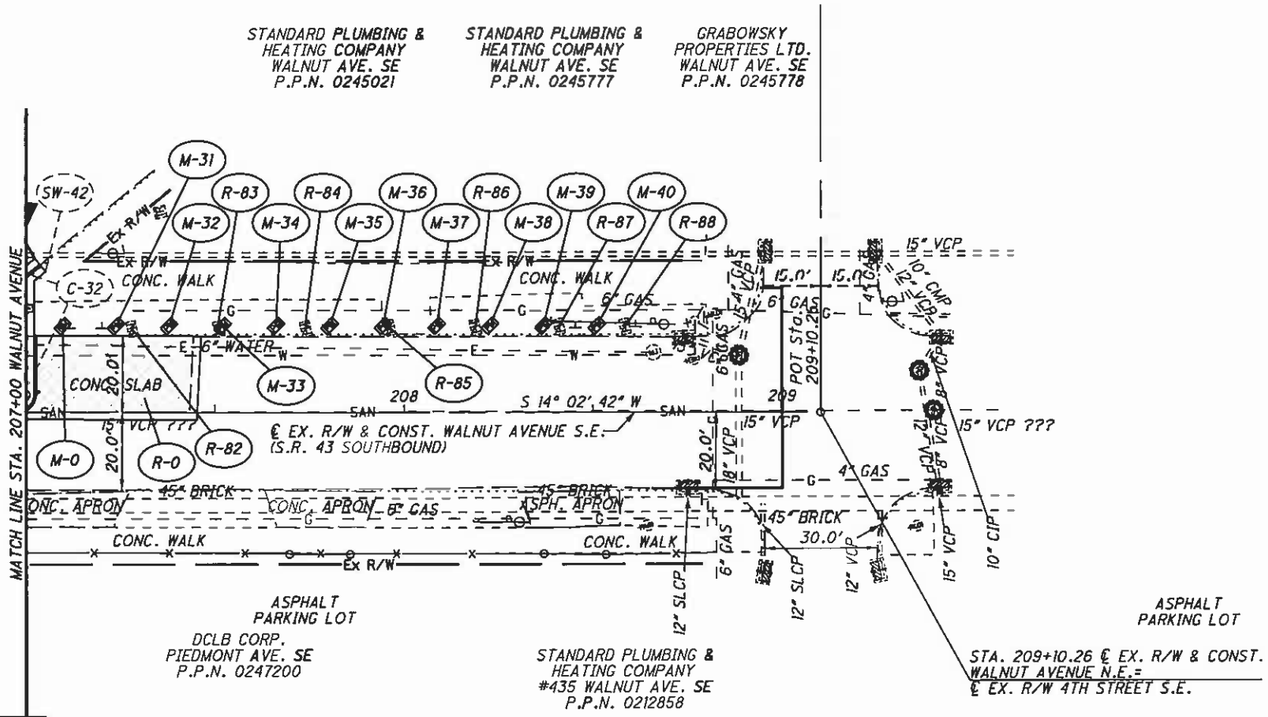

CROSS REFERENCE	
SHEET	DESCRIPTION
XX	XX
XX	XX
XX	XX
XX	XX

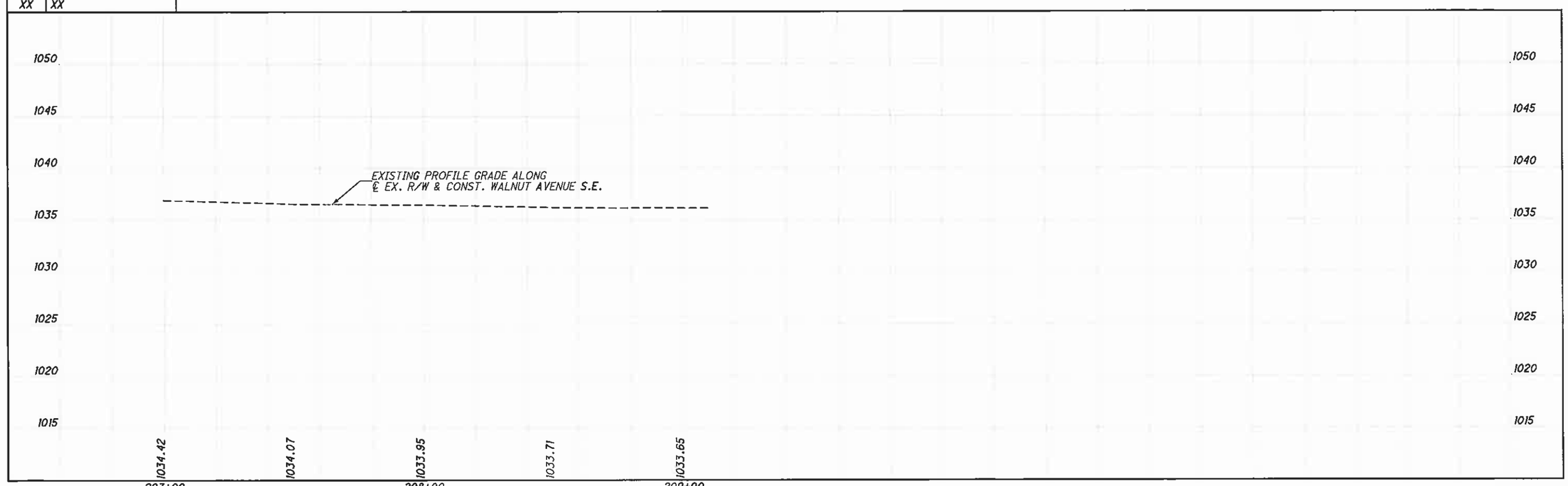

HORIZONTAL SCALE IN FEET 0 10 20 40

CALCULATED JMK/HEH
CHECKED WLC

PLAN AND PROFILE - WALNUT AVENUE
STA. 207+00 TO STA. 209+10.26

WALNUT & CHERRY COMPLETE STREET BIKE LANES

GP 11

R:\Stark\SARTA\Task 3 Canton\STA\91592\roadway\sheets\91592GP011.dgn 2/2/2012 4:28:26 PM jroth

BENCHMARK #20 (SV5350)
CHISELED "□" ON CONCRETE SIDEWALK AT NORTHEAST CORNER OF CHERRY AVE. NE AND FOURTH ST. NE @STA. 135+92.04, 30.66' RIGHT ℄ WALNUT AVE.
ELEV. 1038.46

BENCHMARK #21 (SV5457)
CHISELED "□" ON TOP OF BOLT SIGN BASE AT SOUTHEAST CORNER OF CHERRY AVE. NE AND SIXTH ST. NE @STA. 140+52.41, 40.15' RIGHT ℄ WALNUT AVE.
ELEV. 1040.59

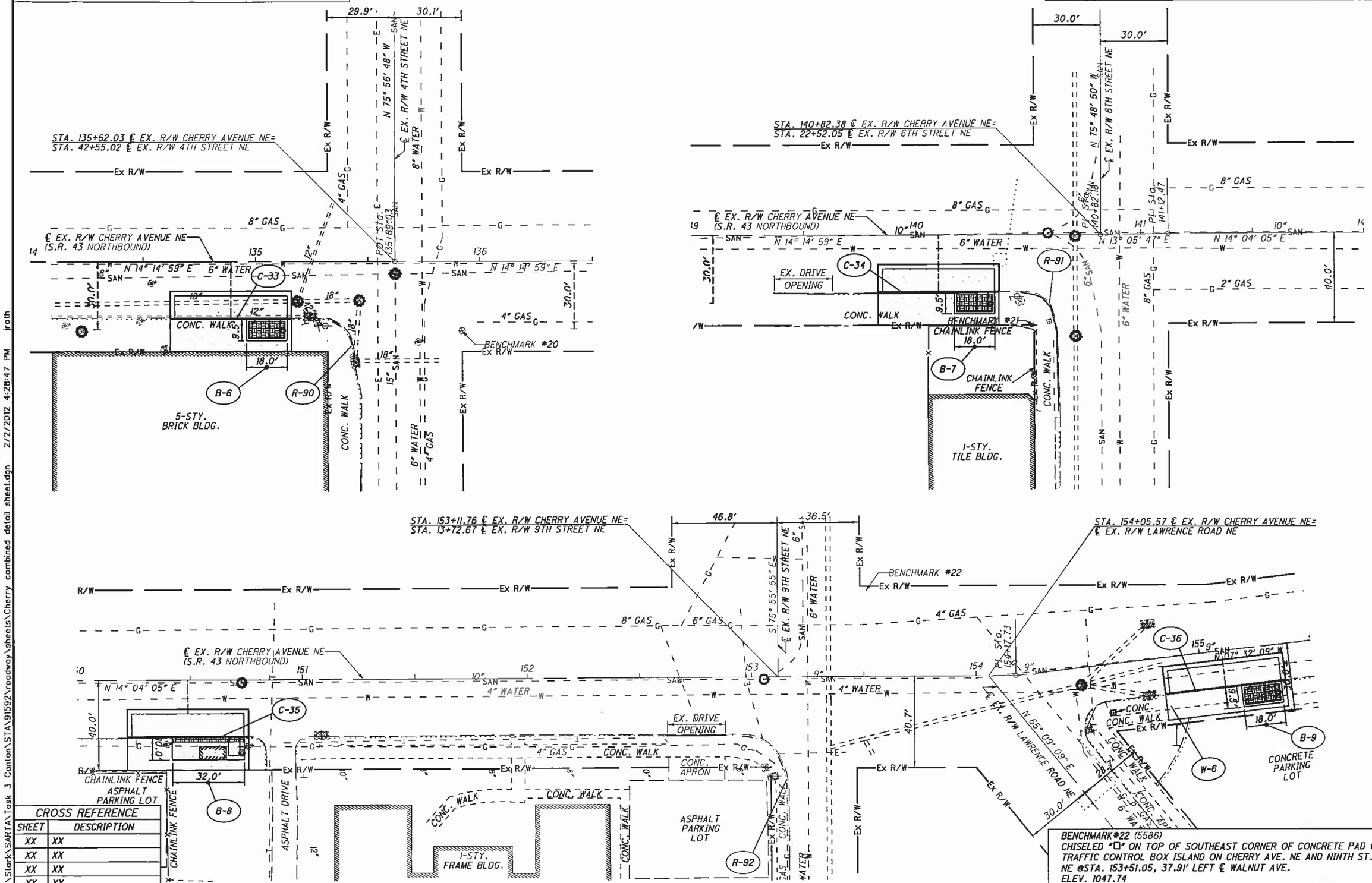

CROSS REFERENCE	
SHEET	DESCRIPTION
XX	XX
XX	XX
XX	XX
XX	XX

BENCHMARK #22 (5586)
CHISELED "□" ON TOP OF SOUTHEAST CORNER OF CONCRETE PAD OF TRAFFIC CONTROL BOX ISLAND ON CHERRY AVE. NE AND NINTH ST. NE @STA. 153+51.05, 37.91' LEFT ℄ WALNUT AVE.
ELEV. 1047.74

HORIZONTAL SCALE IN FEET 0 10 20 40

CALCULATED JMK/HEH
CHECKED WLC

PLAN - CHERRY AVENUE BUS SHELTER/STOP LOCATIONS

WALNUT & CHERRY COMPLETE STREET BIKE LANES

GP 12

R:\Slark\SARTA\Task 3 Canton\STA\91592\roadway\sheets\Cherry combined detail sheet.dgn 2/2/2012 4:28:47 PM jroth

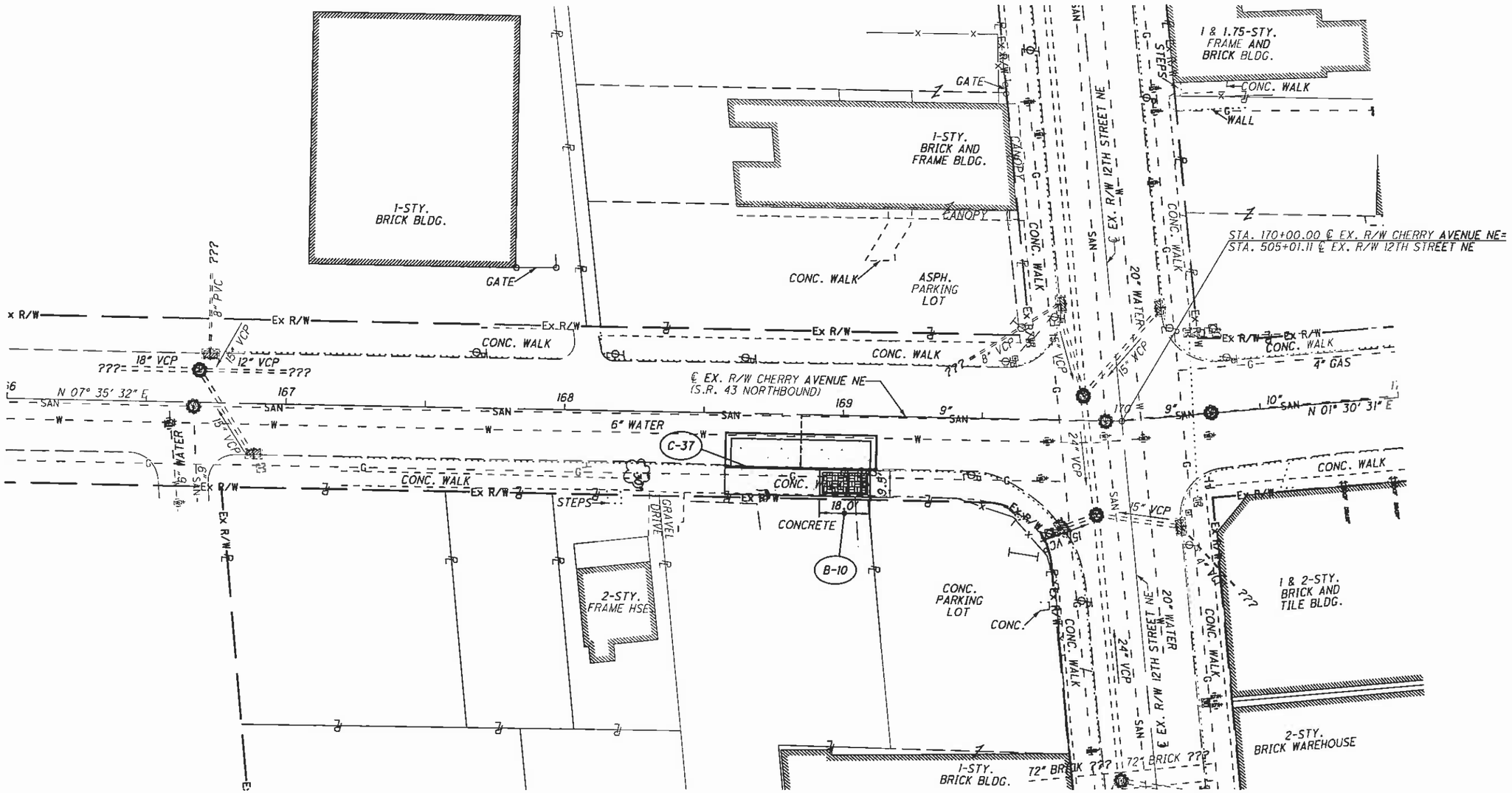

CROSS REFERENCE	
SHEET	DESCRIPTION
XX	XX
XX	XX
XX	XX
XX	XX

HORIZONTAL SCALE IN FEET 0 10 20 40

CALCULATED JMK/HEH
CHECKED WLC

PLAN - CHERRY AVENUE BUS SHELTER/STOP LOCATIONS

WALNUT & CHERRY COMPLETE STREET BIKE LANES

GP 13

R:\Stark\SARTA\Task 3 Canton\STA\91592\roadway\sheets\91592GP016.dgn 2/2/2012 4:29:13 PM jroth

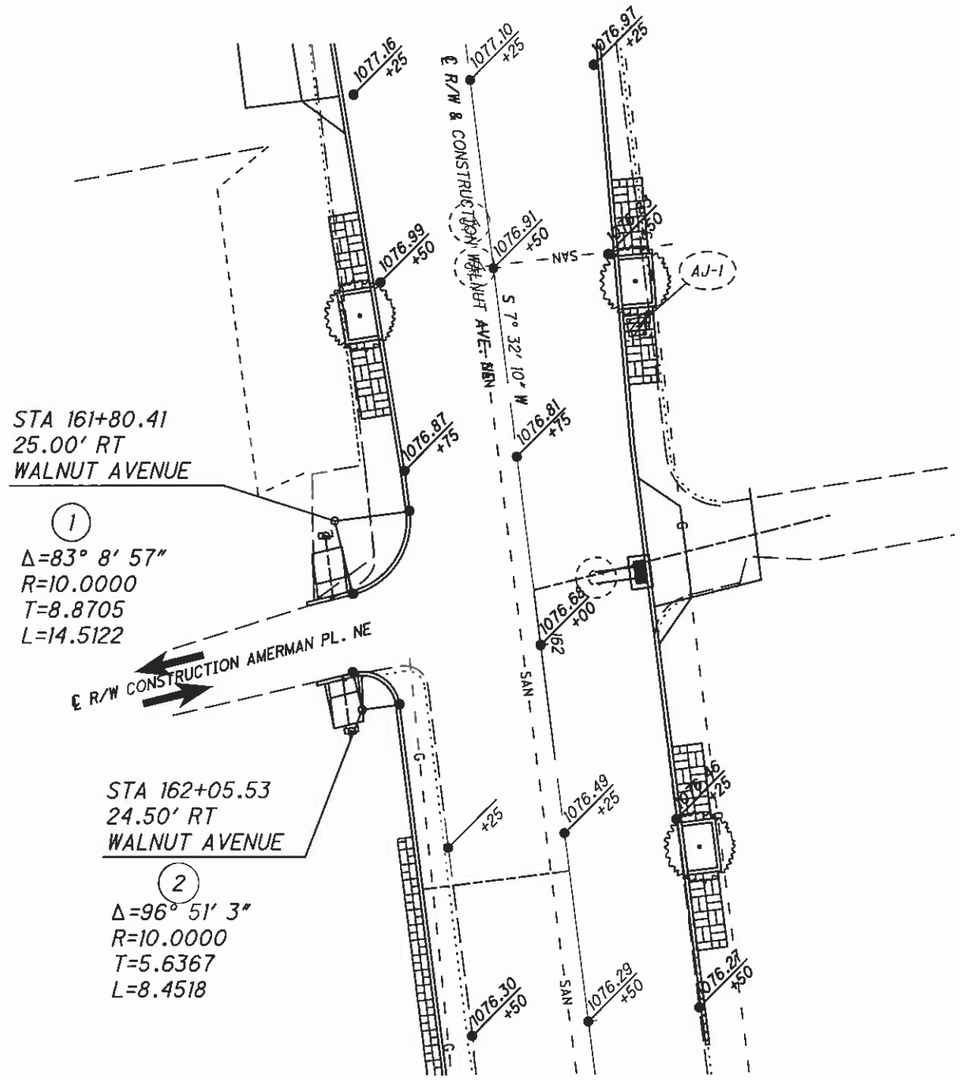

NOTES
* ALL ELEVATIONS ALONG THE CURB ARE BOTTOM OF CURB ELEVATIONS.

HORIZONTAL SCALE IN FEET 0 5 10 20

CALCULATED HEH
CHECKED WLC

INTERSECTION DETAILS
WALNUT AVE./ AMERMAN PL. & WALNUT AVE./11TH ST. NE

STA-WALNUT

GI 1

R:\Stark\SARTA\Task 3 Canton\STA\91592\roadway\sheets\91592GI001.dgn 2/2/2012 4:17:09 PM jroth

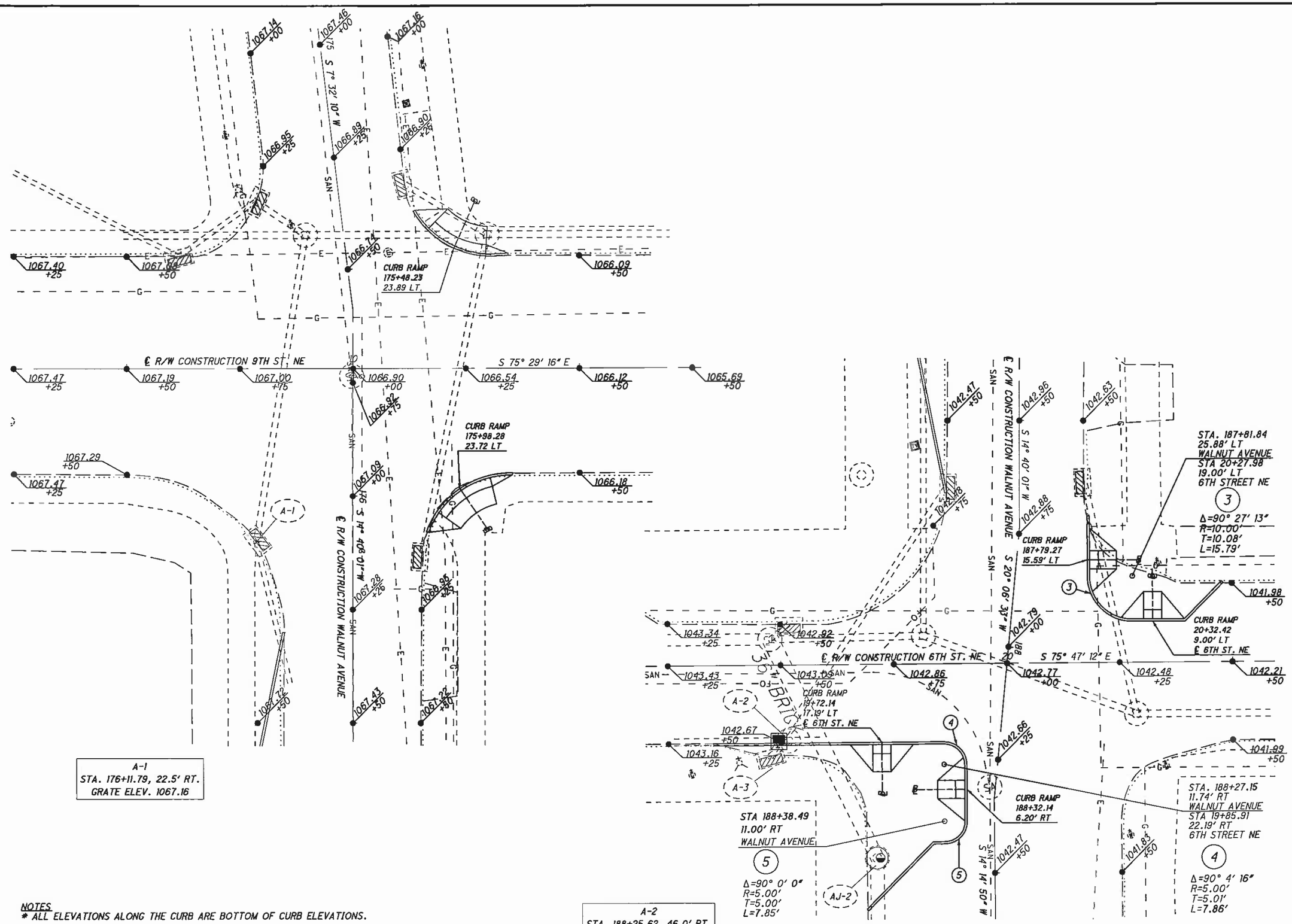

A-1
STA. 176+11.79, 22.5' RT.
GRATE ELEV. 1067.16

A-2
STA. 188+25.62, 46.0' RT.
GRATE ELEV. 1042.47

NOTES
* ALL ELEVATIONS ALONG THE CURB ARE BOTTOM OF CURB ELEVATIONS.

HORIZONTAL SCALE IN FEET 0 5 10 20

CALCULATED HEH
CHECKED WLC

INTERSECTION DETAILS
WALNUT AVE./9TH ST. NE & WALNUT AVE./6TH ST. NE

STA-WALNUT

GI
2

R:\Stark\SARTA\Task 3 Canton\STA\91592\roadway\sheets\91592GI002.dgn 2/2/2012 4:17:41 PM jroth

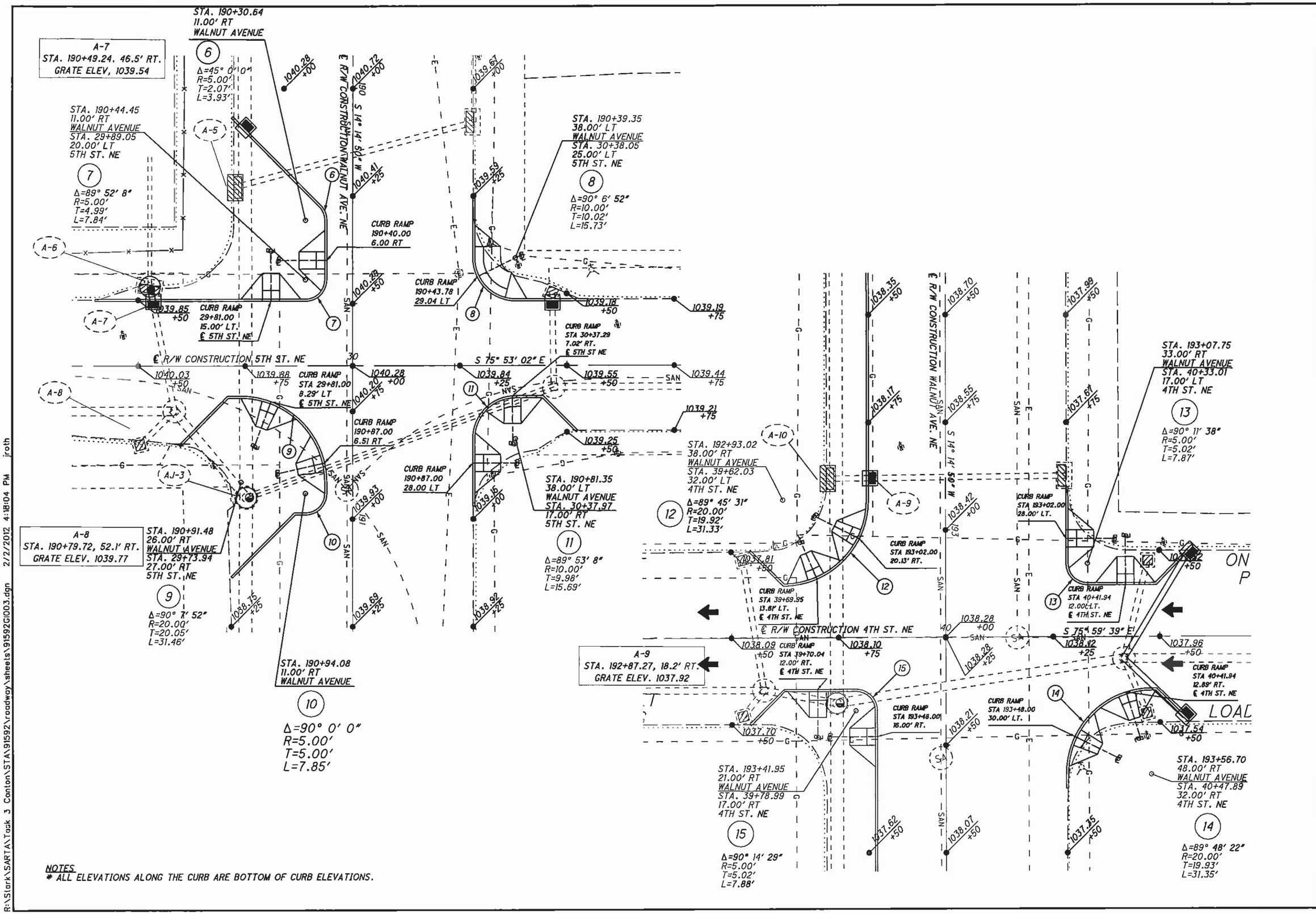

NOTES
* ALL ELEVATIONS ALONG THE CURB ARE BOTTOM OF CURB ELEVATIONS.

HORIZONTAL SCALE IN FEET 0 5 10 20

CALCULATED HEH
CHECKED WLC

INTERSECTION DETAILS
WALNUT AVE./5TH ST. NE & WALNUT AVE./4TH ST. NE

STA-WALNUT

GI 3

R:\Stark\SARTA\Task 3 Canton\STA\91592\roadway\sheets\91592GI003.dgn 2/2/2012 4:18:04 PM jroth

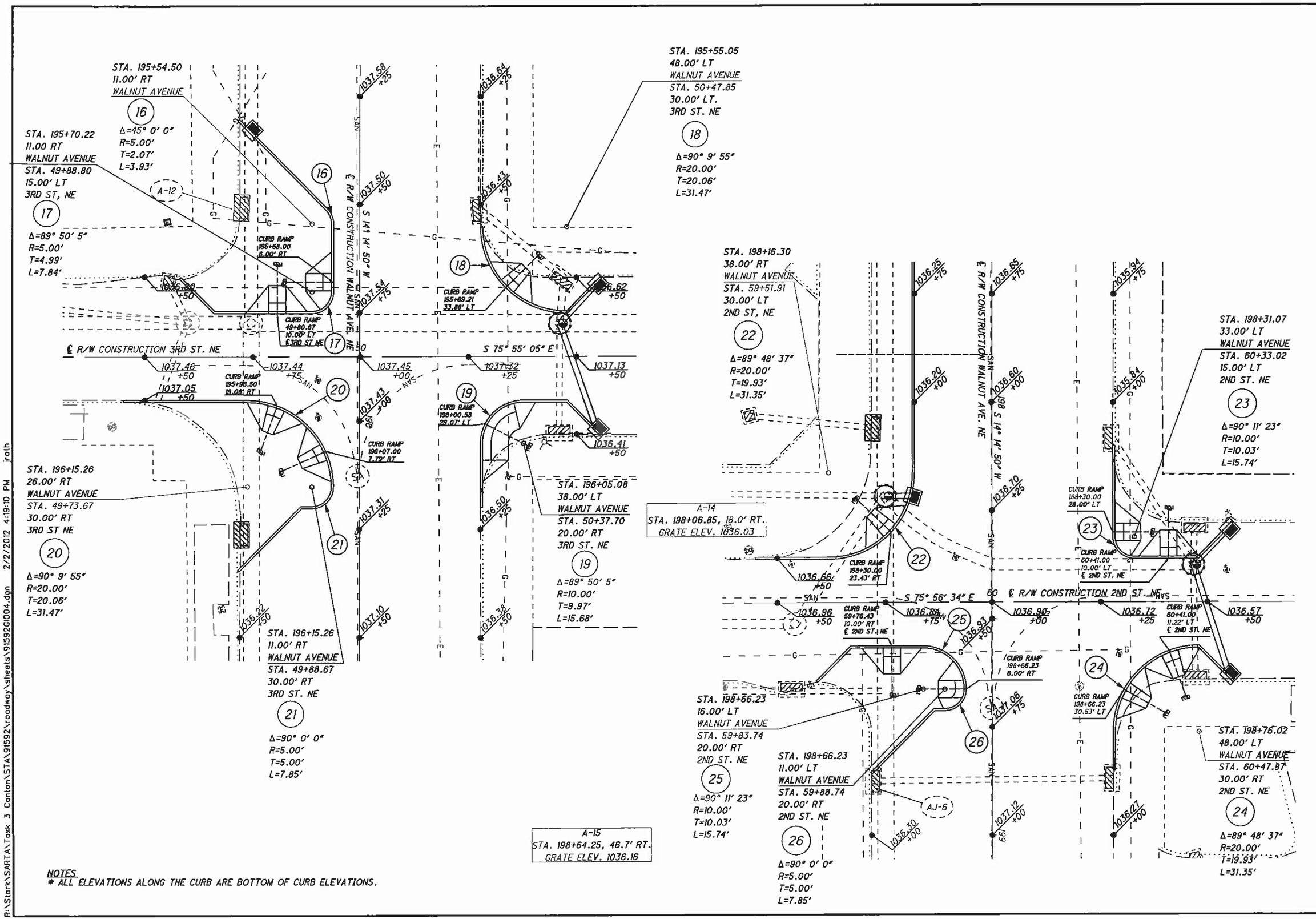

NOTES
* ALL ELEVATIONS ALONG THE CURB ARE BOTTOM OF CURB ELEVATIONS.

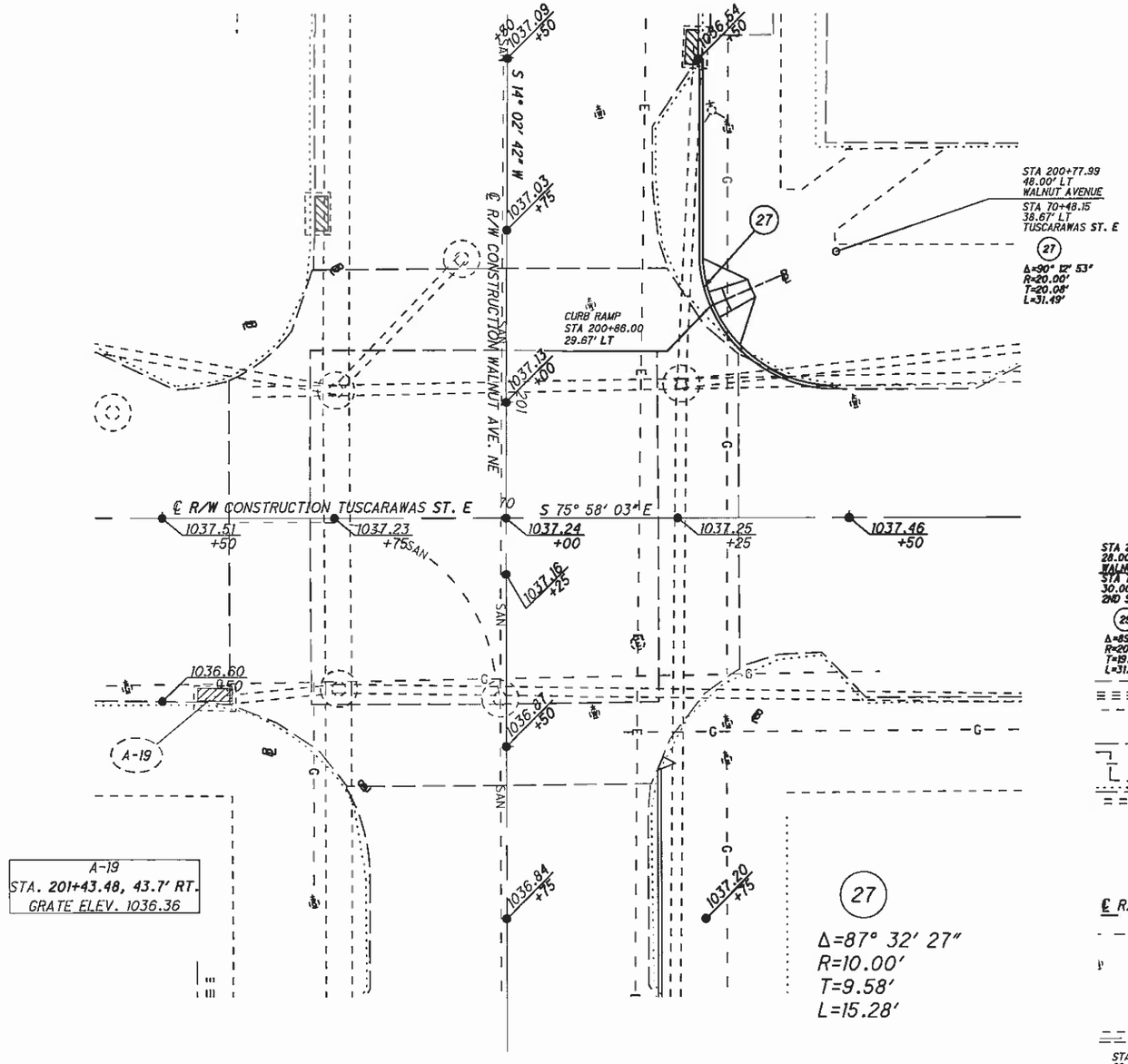

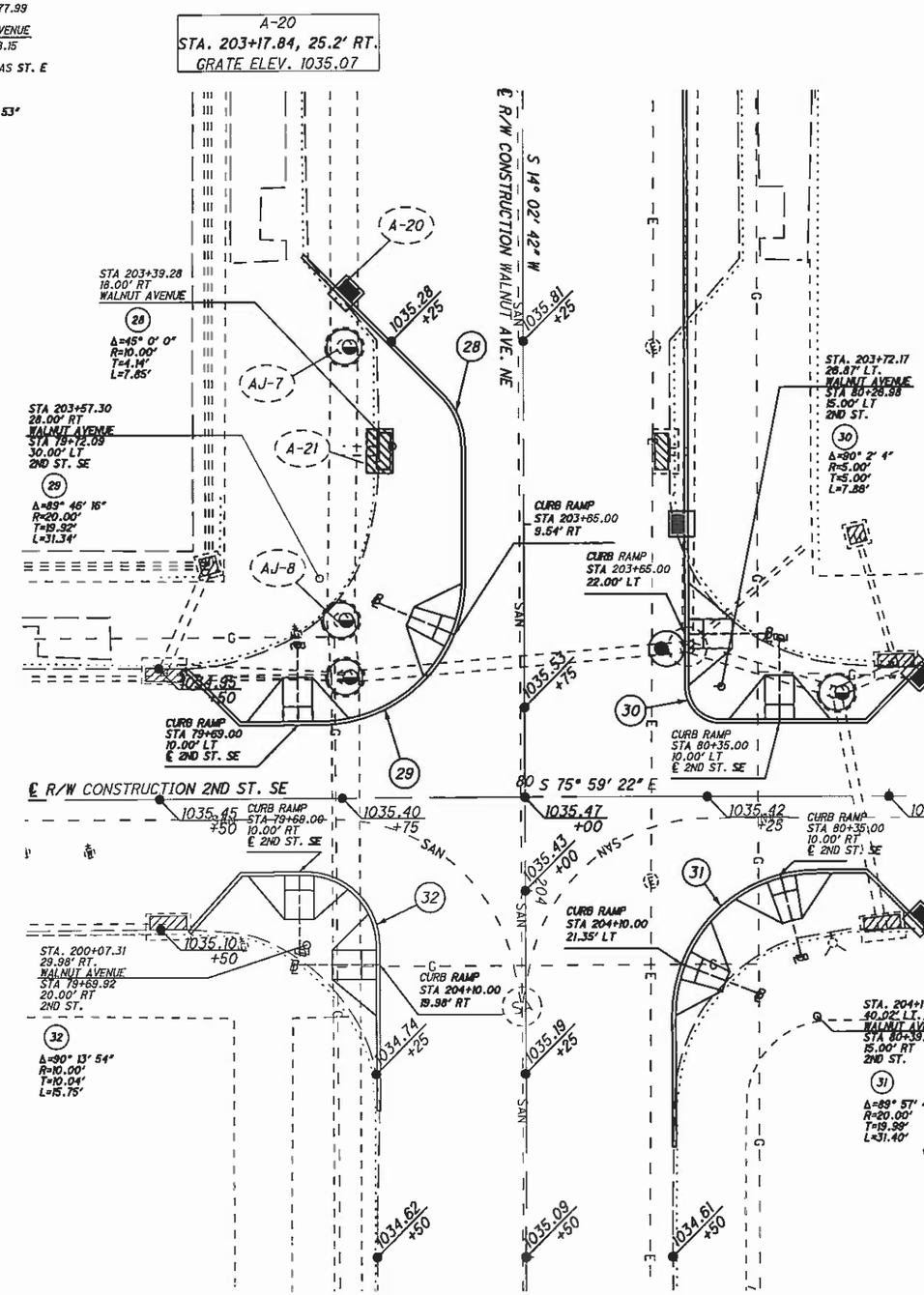

NOTES
* ALL ELEVATIONS ALONG THE CURB ARE BOTTOM OF CURB ELEVATIONS.

HORIZONTAL SCALE IN FEET 0 5 10 20

CALCULATED HEH
CHECKED WLC

INTERSECTION DETAILS
WALNUT AVE./E. TUSC.ST. & WALNUT AVE./2ND ST. SE

STA-WALNUT

R:\Stark\SARTA\Task 3 Canton\STA\91592\roadway\sheets\91592GI005.dgn 2/2/2012 4:19:33 PM jroth

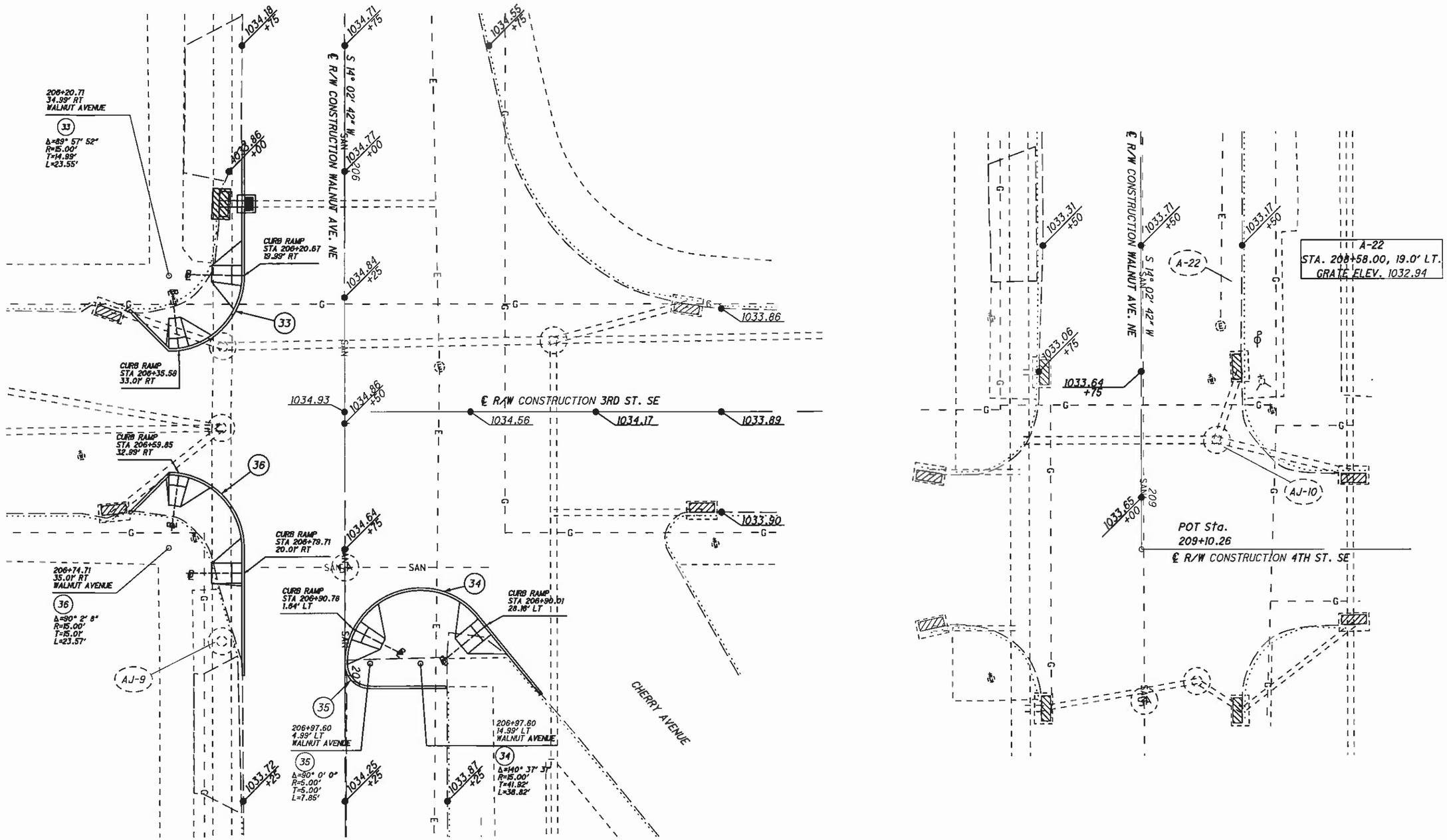

NOTES
* ALL ELEVATIONS ALONG THE CURB ARE BOTTOM OF CURB ELEVATIONS.

HORIZONTAL SCALE IN FEET
0 5 10 20

CALCULATED HEH
CHECKED WLC

INTERSECTION DETAILS
WALNUT AVE./3RD ST. SE & WALNUT AVE./4TH ST. SE

STA-WALNUT

GI
6

R:\Stark\SARTA\Task 3 Canton\STA\91592\roadway\sheets\91592GI005.dgn 2/2/2012 4:20:01 PM jroth

PROPOSED LEGEND:

1. ITEM 204 - SUBGRADE COMPACTION
2. ITEM 304 - AGGREGATE BASE
3. ITEM 448 - ASPHALT CONCRETE SURFACE COURSE, TYPE 1, PG64-22 (DRIVEWAYS)
4. ITEM 452 - NON-REINFORCED CONCRETE PAVEMENT
5. ITEM 408 - PRIME COAT (.040 GAL/SY)

DRIVE PAVEMENT TYPES

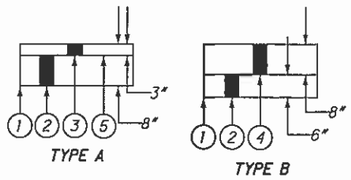

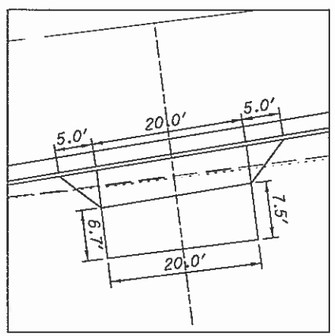

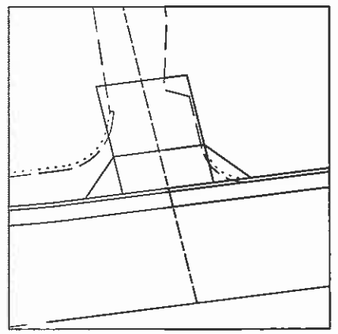

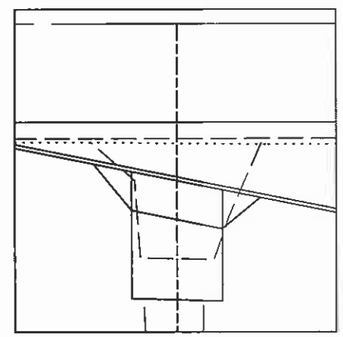

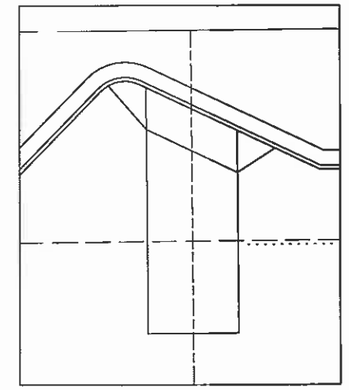

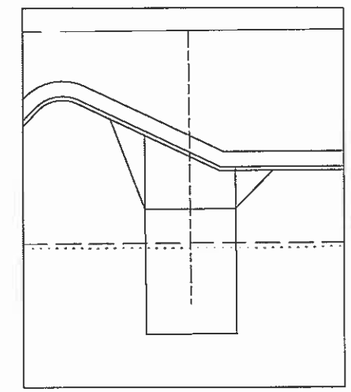

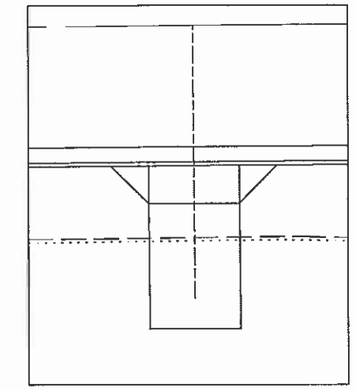

SHEET NO.	REFERENCE NO.	STATION	SIDE	DRIVE TYPE	DRIVE ANGLE	APRON LENGTH "L1"	DRIVEWAY LENGTH "L2"	WIDTH "W"	R1 (LEFT SIDE RADII OF DRIVE LOOKING FROM CL)	R2 (RIGHT SIDE RADII OF DRIVE LOOKING FROM CL)	CADD GENERATED SURFACE AREA
					DEG.	FT.	FT.	FT.	FT.	FT.	SQ. FT.
GP7	DW-1										
GP9	DW-2	197+44	RT.		90°	10	0	12	10	10	0
GP9	DW-3	197+89	RT.		90°	10	0	12	10	10	0
TOTALS CARRIED TO GENERAL SUMMARY											

CALCULATED SJD
CHECKED WLC

DRIVE DETAILS AND SUBSUMMARY

WALNUT & CHERRY COMPLETE STREET BIKE LANES

GD 1

R:\Stark\SARTA\Task 3 Canton\STA\91592\roadway\sheets\91592GD001.dgn 2/2/2012 4:15:44 PM jroth

EX-1
STA. 188+03.31, 52.6' RT. ℄ WALNUT AVE.
COVER ELEV. = 1042.96
EX. 12" INV. (NE) = 1038.71±
EX. 18" INV. (E) = 1035.76±
EX. 30" INV. (W) = 1035.91±
EX. 36" INV. (SE) = 1035.96±

AJ-3
ITEM 604 - MANHOLE ADJUSTED TO GRADE
STA. 190+95.06, 24.8' RT. ℄ WALNUT AVE.
EX. COVER ELEV. = 1039.20±
PROP. COVER ELEV. = 1039.95
EX. 36" INV. (N&S) = 1032.94±

EX-2
STA. 193+40.18, 25.5' RT. ℄ WALNUT AVE.
COVER ELEV. = 1037.89
EX. 18" INV. (NW) = 1031.69±
EX. 36" INV. (SE) = 1030.89±

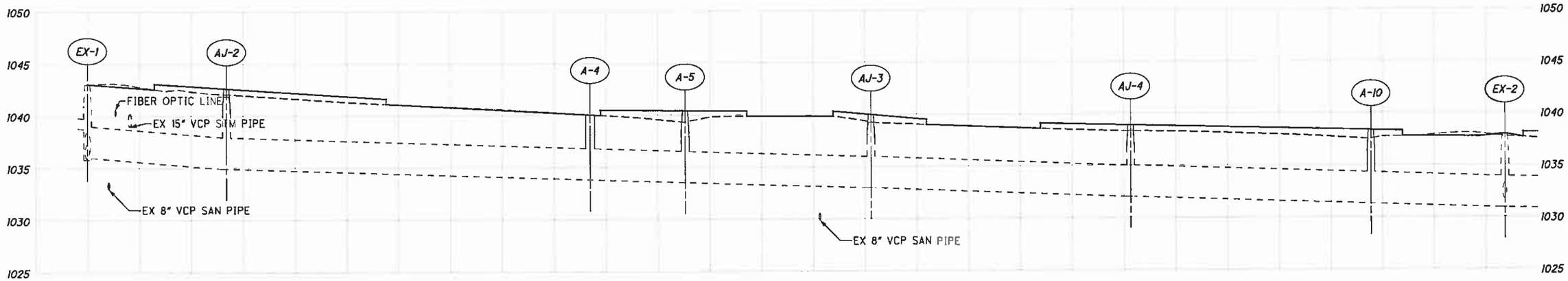

AJ-2
ITEM 604 - MANHOLE ADJUSTED TO GRADE
STA. 188+46.48, 26.0' RT. ℄ WALNUT AVE.
EX. COVER ELEV. = 1041.85±
PROP. COVER ELEV. = 1042.58
EX. 36" INV. (S) = 1034.91±
EX. 36" INV. (NW) = 1034.91±

A-4
ITEM 604 - CATCH BASIN, NO. 3A
STA. 189+86.76, 27.8' RT. ℄ WALNUT AVE.
GRATE ELEV. = 1040.00
EX. 8" INV. (E) = 1038.50±
EX. 36" INV. (N&S) = 1033.80±

A-5
ITEM 604 - MANHOLE, NO. 3
STA. 190+23.42, 27.7' RT. ℄ WALNUT AVE.
COVER ELEV. = 1040.40
EX. 15" INV. (W) = 1034.40±
EX. 36" INV. (N&S) = 1033.50±

AJ-4
ITEM 604 - MANHOLE ADJUSTED TO GRADE
STA. 191+95.43, 25.7' RT. ℄ WALNUT AVE.
EX. COVER ELEV. = 1038.32±
PROP. COVER ELEV. = 1038.87
EX. 36" INV. (N&S) = 1032.00±

A-10
ITEM 604 - MANHOLE, NO. 3
STA. 192+88.43, 27.8' RT. ℄ WALNUT AVE.
COVER ELEV. = 1038.33
EX. 15" INV. (W) = 1032.47±
EX. 36" INV. (N&S) = 1031.28±

EX-3
STA. 195+77.38, 25.2' RT. ℄ WALNUT AVE.
COVER ELEV. = 1037.29
EX. 36" INV. (W) = 1028.38±
EX. 36" INV. (N) = 1029.60±
EX. 45" INV. (S) = 1028.94±
EX. 48" INV. (E) = 1028.23±

AJ-5
ITEM 604 - MANHOLE ADJUSTED TO GRADE
STA. 198+21.67, 24.8' RT. ℄ WALNUT AVE.
EX. COVER ELEV. = 1036.09±
PROP. COVER ELEV. = 1036.68
EX. 15" INV. (W) = 1030.14±
EX. 24" INV. (SW) = 1029.14±
EX. 30" INV. (SE) = 1029.04±
EX. 45" INV. (N&S) = 1029.19±

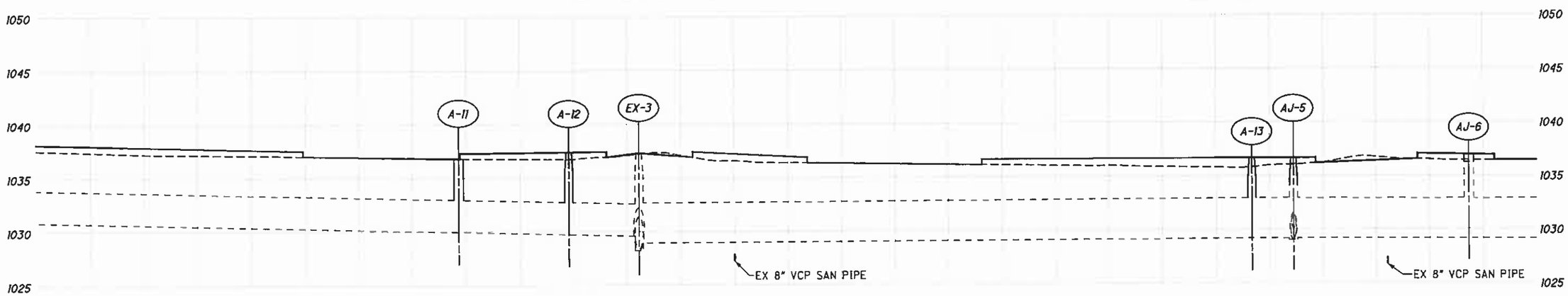

A-11
ITEM 604 - CATCH BASIN, NO. 3A
STA. 195+10.15, 27.7' RT. ℄ WALNUT AVE.
GRATE ELEV. = 1036.80
EX. 36" INV. (N&S) = 1029.96±

A-12
ITEM 604 - MANHOLE, NO. 3
STA. 195+51.21, 27.7' RT. ℄ WALNUT AVE.
COVER ELEV. = 1037.41
EX. 36" INV. (N&S) = 1029.74±

A-13
ITEM 604 - MANHOLE, NO. 3
STA. 198+06.20, 24.8' RT. ℄ WALNUT AVE.
COVER ELEV. = 1036.67
12" INV. (E) = 1033.00
EX. 15" INV. (W) = 1033.00±
EX. 45" INV. (N&S) = 1029.18±

AJ-6
ITEM 604 - CATCH BASIN ADJUSTED TO GRADE
STA. 198+87.52, 28.1' RT. ℄ WALNUT AVE.
EX. GRATE ELEV. = 1036.21
PROP. GRATE ELEV. = 1036.95
EX. 15" INV. (W) = 1032.50±
EX. 45" INV. (N&S) = 1029.56±

CALCULATED SJD
CHECKED CJP

STORM SEWER PROFILES

WALNUT & CHERRY
COMPLETE STREET
BIKE LANES

DF
1

R:\Stark\SARTA\Task 3 Canton\STA\91592\drainage\sheets\91592DF001.dgn 2/2/2012 4:33:02 PM jroth

EX-3A
STA. 199+73.80, 27.8' RT. ℄ WALNUT AVE.
COVER ELEV. = 1036.28
EX. 15" INV. (E) = 1030.38±
EX. 45" INV. (N & S) = 1028.84±

EX-4
STA. 200+98.35, 24.8' RT. ℄ WALNUT AVE.
COVER ELEV. = 1036.97
EX. 15" INV. (NE) = 1031.57±
EX. 15" INV. (NW) = 1031.45±
EX. 18" INV. (E) = 1029.00±
EX. 18" INV. (W) = 1029.75±
EX. 45" INV. (N&S)= 1028.94±

EX-5
STA. 201+41.54, 24.4' RT. ℄ WALNUT AVE.
COVER ELEV. = 1036.86
EX. 15" INV. (E) = 1031.42±
EX. 15" INV. (W) = 1031.42±
EX. 45" INV. (N&S)= 1028.46±

AJ-7
ITEM 604 - MANHOLE ADJUSTED TO GRADE
STA. 203+25.72, 24.5' RT. ℄ WALNUT AVE.
EX. COVER ELEV. = 1035.75
PROP. COVER ELEV. = 1036.00
EX. 45" INV. (N&S) = 1028.25±

EX-6
STA. 203+70.76, 24.5' RT. ℄ WALNUT AVE.
COVER ELEV. = 1035.18
EX. 8" INV. (NW) = 1029.58±
EX. 18" INV. (E) = 1027.98±
EX. 45" INV. (N&S)= 1027.85±

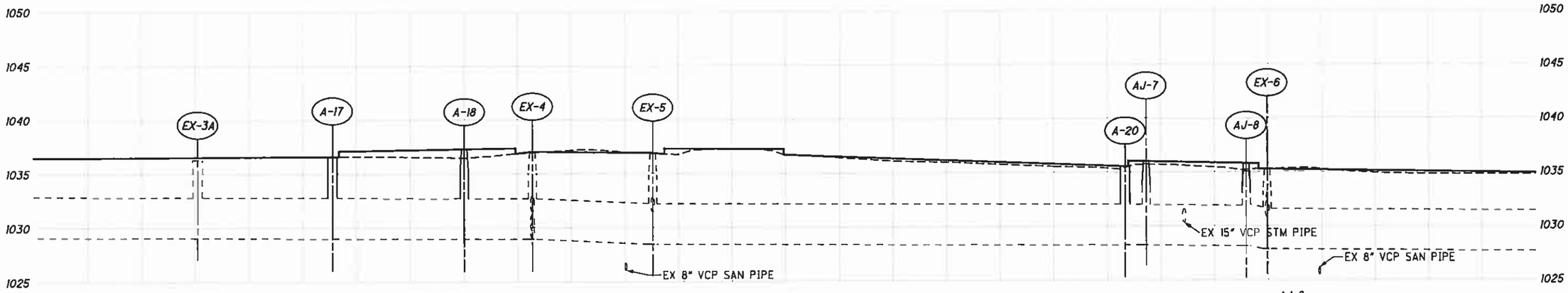

A-17
ITEM 604 - CATCH BASIN, NO. 3A
STA. 200+23.91, 25.2' RT. ℄ WALNUT AVE.
GRATE ELEV. = 1036.57
EX. 45" INV. (N&S) = 1029.01±

A-18
ITEM 604 - MANHOLE, NO. 3
STA. 200+73.04, 27.9' RT. ℄ WALNUT AVE.
COVER ELEV. = 1037.27
EX. 45" INV. (N&S) = 1028.96±

A-20
ITEM 604 - CATCH BASIN, NO. 3A
STA. 203+17.84, 25.2' RT. ℄ WALNUT AVE.
GRATE ELEV. = 1035.51
EX. 45" INV. (N&S) = 1028.26±

AJ-8
ITEM 604 - MANHOLE ADJUSTED TO GRADE
STA. 203+62.99, 25.1' RT. ℄ WALNUT AVE.
EX. COVER ELEV. = 1035.05
PROP. COVER ELEV. = 1035.79
EX. 45" INV. (N&S) = 1028.13±

EX-7
STA. 206+06.45, 25.0' RT. ℄ WALNUT AVE.
COVER ELEV. = 1033.50
EX. 15" INV. (E) = 1028.65±
EX. 45" INV. (N&S)= 1027.59±

EX-9
STA. 206+50.89, 24.6' RT. ℄ WALNUT AVE.
COVER ELEV. = 1034.59
EX. 15" INV. (W) = 1028.84±
EX. 15" INV. (SE) = 1028.89±
EX. 15" INV. (NW) = 1028.59±
EX. 45" INV. (N&S) = 1027.14±

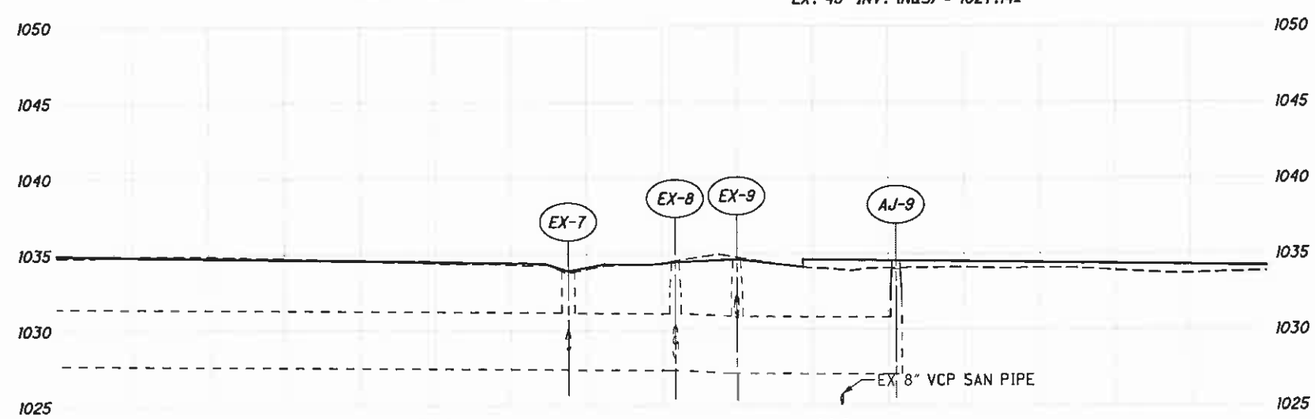

EX-8
STA. 206+34.70, 24.3' RT. ℄ WALNUT AVE.
COVER ELEV. = 1034.41
EX. 15" INV. (NW) = 1029.01±
EX. 18" INV. (E) = 1028.11±
EX. 45" INV. (N&S)= 1027.31±

AJ-9
ITEM 604 - MANHOLE ADJUSTED TO GRADE
STA. 206+93.21, 24.56' RT. ℄ WALNUT AVE.
EX. COVER ELEV. = 1033.99
PROP. COVER ELEV. = 1034.55
EX. 45" INV. (N&S) = 1027.04±

CALCULATED SJD
CHECKED CJP

STORM SEWER PROFILE

WALNUT & CHERRY
COMPLETE STREET
BIKE LANES

DF
2

R:\Stark\SARTA\Task 3 Canton\STA\91592\drainage\sheets\915920F002.dgn 2/2/2012 4:33:19 PM jroth

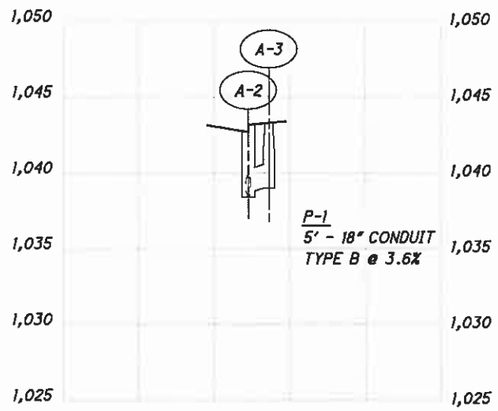

A-2
ITEM 604 - CATCH BASIN, NO. 3A
STA. 188+25.62, 46.0' RT. ℄ WALNUT AVE.
GRATE ELEV. = 1042.65
EX. 18" INV. (W) = 1038.77±
EX. 18" INV. (SE) = 1038.97±
18" INV. (SW) = 1038.77

A-3
ITEM 604 - MANHOLE, NO. 3
STA. 188+29.34, 50.0' RT. ℄ WALNUT AVE.
COVER ELEV. = 1043.26
EX. 15" INV. (SW) = 1038.95±
18" INV. (NE) = 1038.95

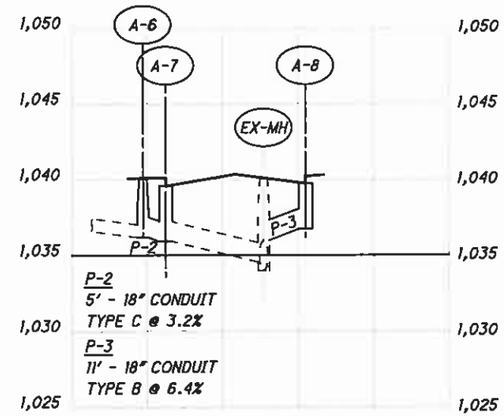

A-6
ITEM 604 - MANHOLE, NO. 3
STA. 29+52.70, 18.8' LT. ℄ 5TH ST.
COVER ELEV. = 1040.07
EX. 10" INV. (N) = 1036.17±
18" INV. (S) = 1036.07

A-8
ITEM 604 - CATCH BASIN, NO. 3A
STA. 29+47.91, 15.2' RT. ℄ 5TH ST.
COVER ELEV. = 1039.92
18" INV. (E) = 1036.71

A-7
ITEM 604 - CATCH BASIN, NO. 3A
STA. 29+53.58, 15.3' LT. ℄ 5TH ST.
COVER ELEV. = 1039.69
EX. 15" INV. (S) = 1035.91±
18" INV. (N) = 1035.91

EX-MH
STA. 29+58.43, 10.5' RT. ℄ 5TH ST.
COVER ELEV. = 1040.07
EX. 15" INV. (NW) = 1034.54±
EX. 24" INV. (E&W) = 1033.97±
18" INV. (SW) = 1036.00

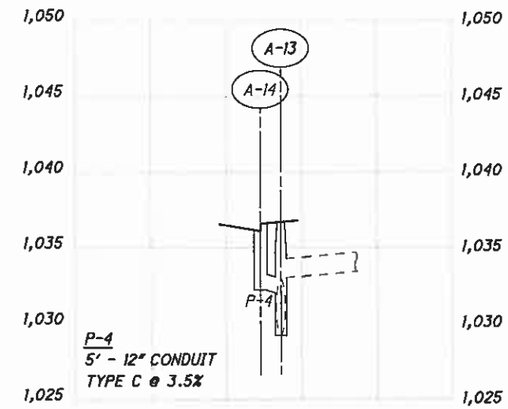

A-13
ITEM 604 - MANHOLE, NO. 3
STA. 198+06.20, 24.8' RT. ℄ WALNUT AVE.
COVER ELEV. = 1036.67
12" INV. (E) = 1032.00
EX. 15" INV. (W) = 1033.00±
EX. 45" INV. (N&S) = 1029.18±

A-14
ITEM 604 - CATCH BASIN, NO. 3A
STA. 198+06.85, 18.0' RT. ℄ WALNUT STREET.
COVER ELEV. = 1036.17
12" INV. (E) = 1032.17

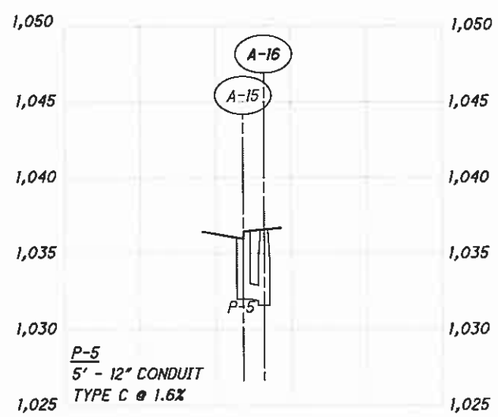

A-16
ITEM 604 - MANHOLE, NO. 3
STA. 79+56.26, 20.7' RT. ℄ 2ND ST.
COVER ELEV. = 1036.58
12" INV. (N) = 1032.00
EX. 18" INV. (W) = 1031.88±
EX. 15" INV. (E) = 1031.58

A-15
ITEM 604 - CATCH BASIN, NO. 3A
STA. 79+56.26, 17.9' RT. ℄ 2ND ST.
COVER ELEV. = 1036.08
12" INV. (S) = 1032.08

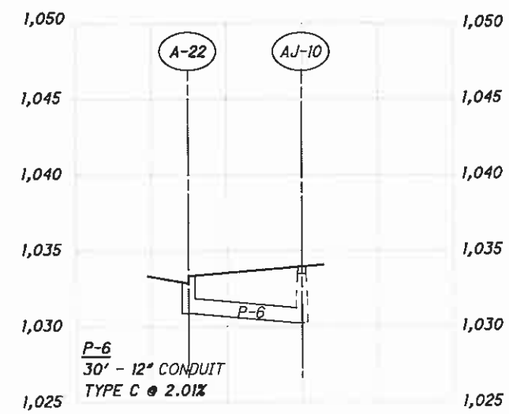

AJ-10
ITEM 604 - MANHOLE, NO. 3, ADJUSTED TO GRADE
STA. 208+88.59, 15.1' LT. ℄ WALNUT AVE.
EX. COVER ELEV. = 1033.46±
COVER ELEV. = 1033.96
EX. 18" INV. (W) = 1030.23±
12" INV. (NE) = 1030.23

A-22
ITEM 604 - CATCH BASIN, NO. 3A
STA. 208+58.00, 19.0' LT. ℄ WALNUT AVE.
COVER ELEV. = 1032.85
12" INV. (S) = 1030.85

P-1, P-2, P-3, P-4, P-5, P-6

CALCULATED SJD
CHECKED CJP

STORM SEWER PROFILES

WALNUT & CHERRY
COMPLETE STREET
BIKE LANES

DF
3

R:\Stark\SARTA\Task 3 Canton\STA\91592\drainage\sheets\91592DF003.dgn 2/2/2012 4:33:36 PM jroth

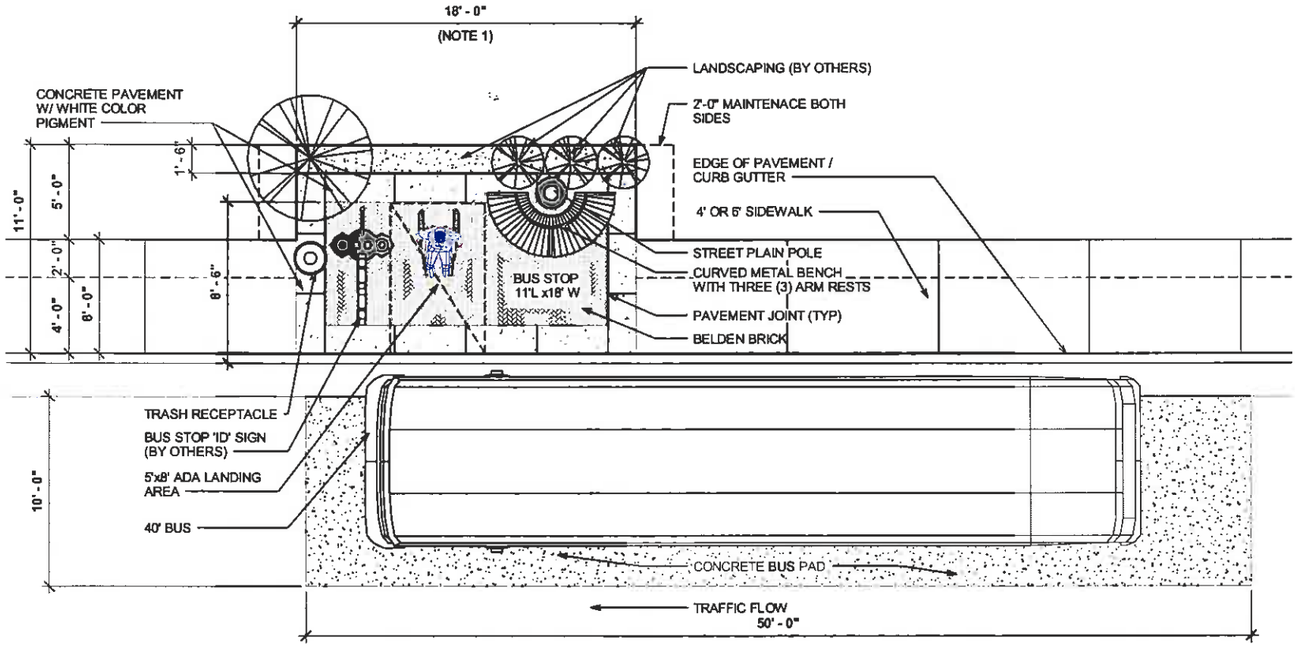

1 TYPICAL MINOR BUS STOP
1/4" = 1'-0"

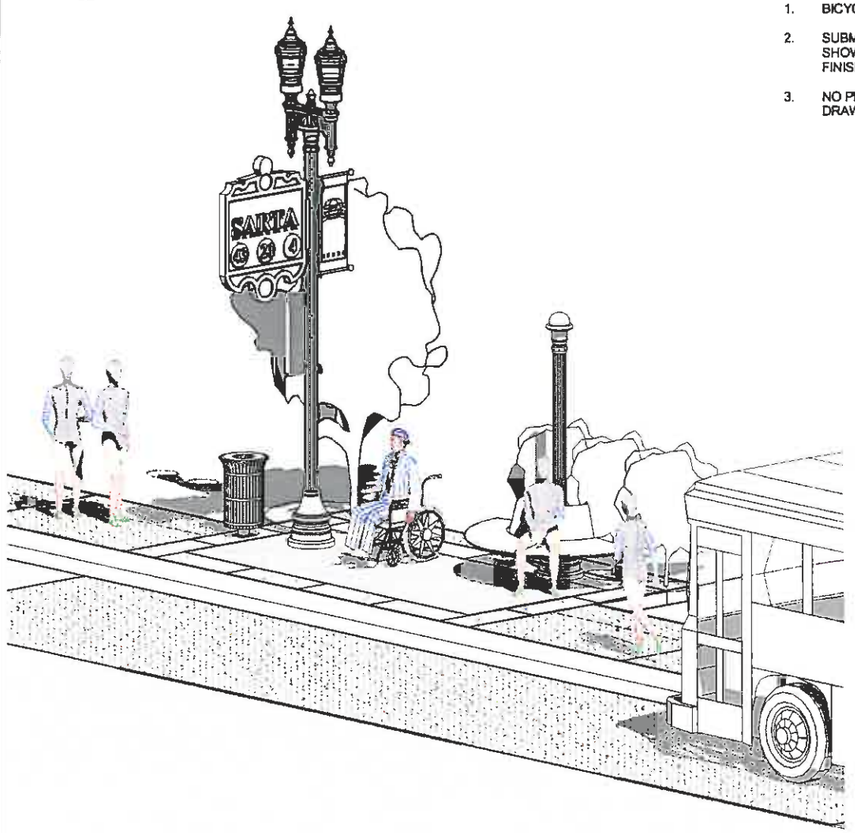

GENERAL NOTES:

1. BICYCLE RACKS ARE NOT REQUIRED WITH MINOR BRT STOPS.
2. SUBMIT COMPLETE SHOP DRAWING AND SAMPLES FOR EACH PRODUCT SHOWING MATERIALS, DESIGN/FABRICATION DETAILS WITH DIMENSIONS, FINISH DETAILS AND COLOR CHARTS FOR OWNER'S APPROVAL.
3. NO PRODUCT SHALL BE PROCURED OR FABRICATED PRIOR TO ITS SHOP DRAWING APPROVAL BY THE OWNER.

PRODUCT NOTES:

1. Bus Shelter Specifications

All bus shelters are free standing structures and shall be designed and installed with provisions as indicated in project documents. The bus shelter shall comply with all local, state & federal codes, standards and regulations including the Access Board's ADA - Accessibility Guidelines (ADAAG). Each bus shelter shall be of minimum clear inside dimensions of 5'- 0" width, 12'- 0" length & 7'- 0" clear high wall openings at entry points.

A. Submittal Requirements

Prior to fabrication of these bus shelter units, the following shall be submitted to the Owner for review and acceptance.

1. Submit complete shop drawings for shelter design showing design dimensions and installation details, materials and finishes.
2. Submit necessary structural design calculations for wind loads and other code compliance. All documents shall be stamped, signed and sealed by a registered professional Engineer for the State of Ohio.
3. Submit the polyester powder coating finish warranty document for ten (10) years from substantial completion.
4. Submit manufacturer's standard color chart for polyester powder coat finish for owner to select the color.

B. Shelter Roof Systems

The bus shelter shall have hip roof configuration with aluminum structural framing system supporting standing seam structural aluminum roofing system. The perimeter roof gutter shall be provided with drain outlet provisions on the front side through curb.

C. Shelter Framing Systems

Framing systems shall be engineered to contribute strength, durability and aesthetics to bus shelter's design.

Standard material for is 6063-T5 extruded aluminum.
For certain applications, 6061-T6 or 6005-T6alloy/temper aluminum will be acceptable.

Framing members and grillwork finish shall be polyester powder coat in the color to be selected by the Owner.

D. Shelter Wall Systems

The shelter wall configuration shall have three and one half sides fully closed from roof to floor. The walls shall be framed with aluminum structural members with ¼" thick clear tempered safety glass. The decorative grill work shall be incorporated in the wall panels.

Decorative grillwork at wall panels shall be made from welded 1" x 1" x 1/8" extruded aluminum members as indicated. The grillwork shall be applied to the interior side of the wall panel. The vertical framing members shall be connected to the concrete slab/foundation with concealed plates and fasteners.

E. Finish Requirements

The roofing panels, framing members and grillwork shall have polyester powder coat finish with graffiti-resistant coating. The color shall be selected by the Owner. The ¼" safety glass shall also have the graffiti-resistant coating. The polyester powder coat finish shall be warranted for 10 years to be free from cracking, peeling, chalking or fading against ultraviolet exposure.

2. Benches Specifications

a. Curved metal bench with back (Semi-circular bench): - Each bench shall be comprised of two components of 90o to form one curved metal bench with back and minimum three armrests per each curved shall have min. 40.25 inch outside radius and 14.25 inch inside radius. The bench shall have concealed in -ground support mounting. Total of XX (xx) curved metal benches shall be furnished and installed as indicated. Acceptable product design is "Model NRB-90" design by Victor Stanley, Inc. (modified for project requirements) or accepted equal.

b. Straight metal bench with backs: - The bench shall be 4'- 0" nominal length x 2'- 4" wide with 3 armrests, one at each end and one at mid point. The bench shall have concealed in-ground support mounting. Total of XX (xx) benches shall be furnished and installed as indicated.

Straight and curved benches shall be welded construction using ¼" x 1 ½" steel bars, 5/8" 0 steel rods and schedule 40 steel pipes. Customize the design as necessary to comply with project requirements.
All bench designs for the project shall be ADA compliant and shall have electrostatic polyester powder coated 8-10 mils. Thick minimum coated finish. The color shall be as selected by owner from color chart #52007 by Victor Stanley, Inc.

3. Bike Rack Specifications

Bike racks shall be made from tubular 2 3/8" O.D., schedule 40 steel pipe arcs type design. The bike rack mounting shall be concealed in the pavement. The finish shall be factory applied electrostatic polyester powder coating with 8-10 mils. minimum thickness. The acceptable product design is "model BK-3" as manufactured by Victor Stanley, Inc., Dunkirk, Maryland, or accepted equal. The color shall be as selected by owner from color chart #52007 for powder coatings by Victor Stanley, Inc. Total of XX (xx) bike rack units shall be furnished and installed as indicated.

4. Trash Receptacle Specifications

Trash receptacles shall be top loading, 36 gallons capacity made from solid steel 5/8 inch top ring with 3/8 x 1 inch vertical steel bars welded construction with elevated recessed pedestal type base and electrostatic polyester powder coated finish. The coating shall be minimum 8-10 mils. thick. The color shall be as selected by owner from color chart #52007 for powder coatings by Victor Stanley, Inc. Each trash receptacle shall also be supplied with high-density black plastic formed liner. It shall be reinforced, ribbed and molded for durability. The trash receptacle shall be anchor bolted to the pavement. Total of XX (xx) trash receptacle units shall be furnished and installed as indicated. The acceptable product design is 'Ironsites' series, Model S-42 with standard tapered formed lid as manufactured by Victor Stanley, Inc., Dunkirk, Maryland, or accepted equal.

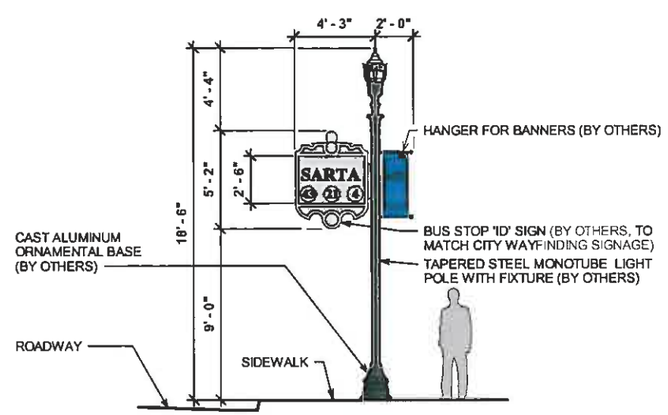

2 BUS STOP ID SIGN POST
1/4" = 1'-0"

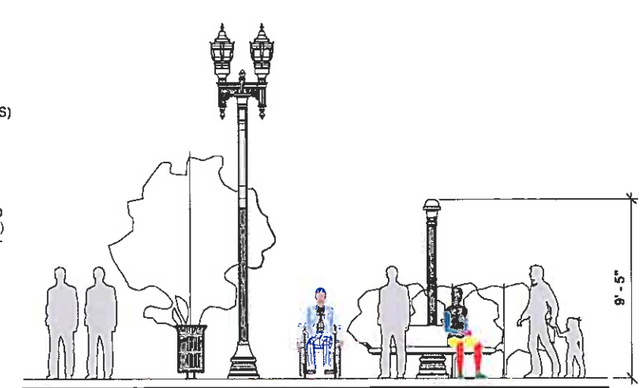

3 ELEVATION
1/4" = 1'-0"

11/4/2011 3:26:31 PM

HORIZONTAL SCALE 1/4" = 1'-0"

DESIGNED D.V. Shah
DRAWN M. Cooper

TYPICAL MINOR BRT STOP WITHOUT BUS SHELTER
PLAN & ELEVATIONS

SARTA – CANTON, OHIO

PARSONS BRINCKERHOFF
PARSONS BRINCKERHOFF
3340 Peachtree Road, Ste. 2400, Atlanta, GA 30326
404 - 237 - 2115 FAX 404 - 237 - 3015

A101

Plot Date/Time 11/4/2011 3:26:31 PM File Name G:\ABI\CLIENT\BRT System Canton Ohio\CAD\BRT-Minor Bus Stop.dwt

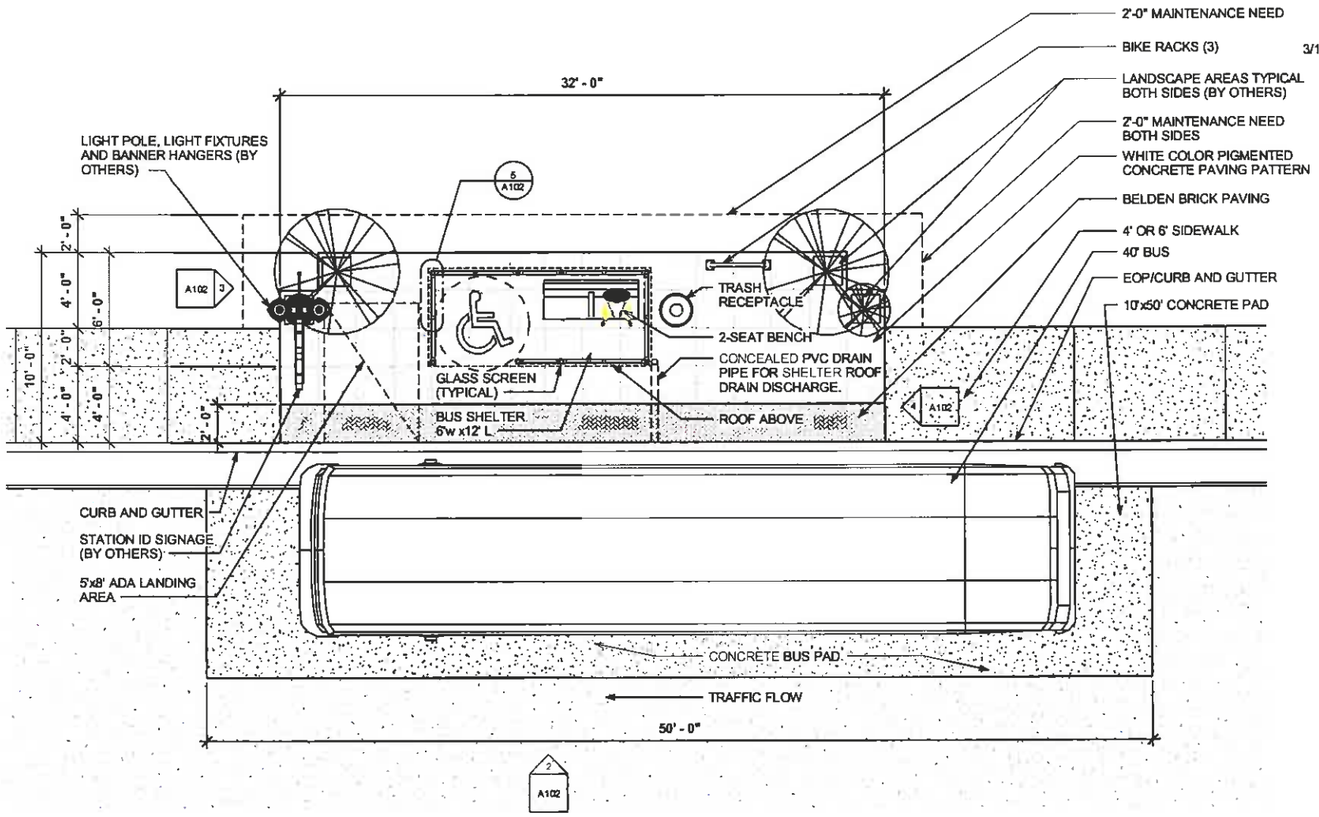

1 TYPICAL MAJOR BUS STOP
1/4" = 1'-0"

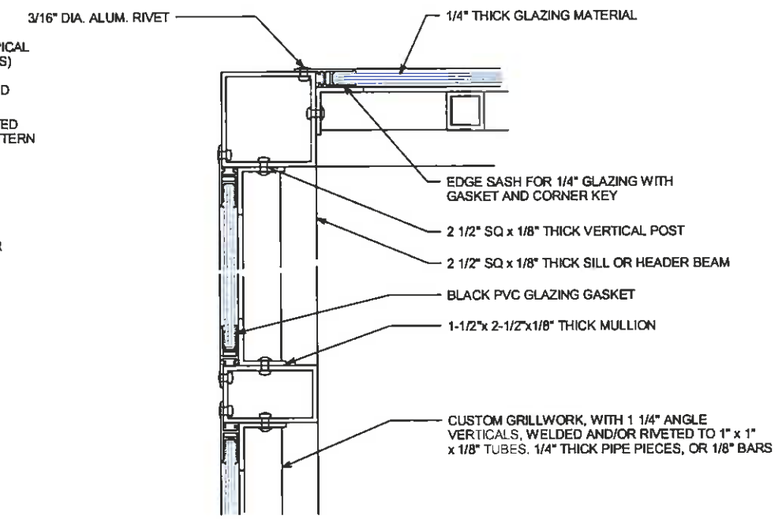

5 DETAIL
6" = 1'-0"

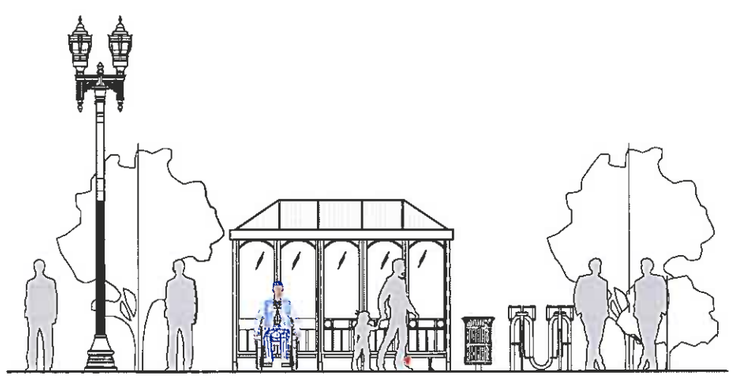

2 ELEVATION
1/4" = 1'-0"

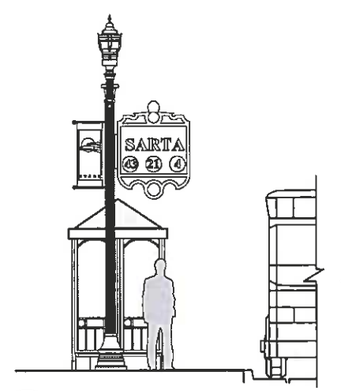

3 ELEVATION
1/4" = 1'-0"

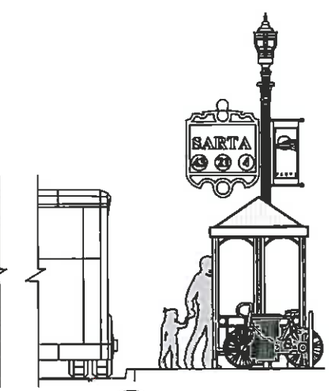

4 ELEVATION
1/4" = 1'-0"

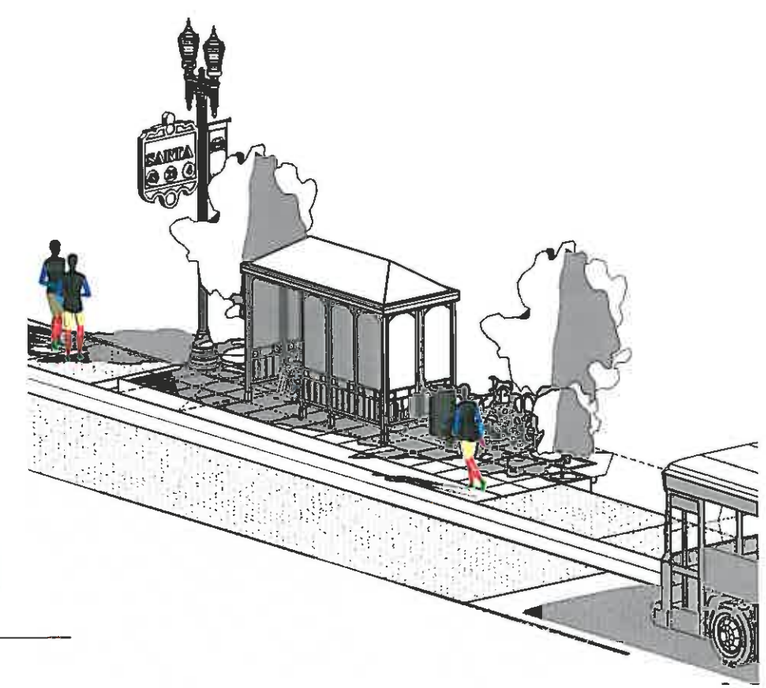

HORIZONTAL SCALE
As Indicated

DESIGNED D.V. Shah
DRAWN M. Cooper

TYPICAL MAJOR BRT STOP WITH BUS SHELTER
PLAN & ELEVATIONS

SARTA – CANTON, OHIO

A102

PARSONS BRINCKERHOFF
PARSONS BRINCKERHOFF
3340 Peachtree Road, Ste. 2400, Atlanta, GA 30326
404 - 237 - 2115 FAX 404 - 237 - 3015

11/4/2011 3 30 40 PM

Plot Date/Time 11/4/2011 3 30 40 PM File Name Q:\AA\BI\CLIENT\BRT System Canton Ohio\CAD\DBRT-Alnor Bus Stop v8.rvt

GUARANTEE
THE CONTRACTOR SHALL GUARANTEE THAT THE TRAFFIC CONTROL SYSTEM INSTALLED AS PART OF THIS CONTRACT SHALL OPERATE SATISFACTORILY FOR A PERIOD OF 120 DAYS FOLLOWING COMPLETION OF THE 10-DAY PERFORMANCE TEST. IN THE EVENT OF UNSATISFACTORY OPERATION THE CONTRACTOR SHALL CORRECT FAULTY INSTALLATIONS, MAKE REPAIRS AND REPLACE DEFECTIVE PARTS WITH NEW PARTS OF EQUAL OR BETTER QUALITY. EQUIPMENT, MATERIAL AND LABOR COSTS INCURRED IN CORRECTING AN UNSATISFACTORY OPERATION SHALL BE BORNE BY THE CONTRACTOR.

THE GUARANTEE SHALL COVER THE FOLLOWING ITEMS OF THE TRAFFIC CONTROL SYSTEM: CONTROLLERS AND ASSOCIATED EQUIPMENT, INTERCONNECTION ITEMS AND MASTER CONTROL EQUIPMENT.

CUSTOMARY MANUFACTURER'S GUARANTEES FOR THE FOREGOING ITEMS SHALL BE TURNED OVER TO THE STATE OR THE MAINTAINING AGENCY FOLLOWING ACCEPTANCE OF THE EQUIPMENT.

THE COST OF GUARANTEEING THE TRAFFIC CONTROL SYSTEM WILL BE INCIDENTAL TO AND INCLUDED IN THE CONTRACT UNIT PRICE OF THE VARIOUS ITEMS MAKING UP THE SYSTEM.

NOTIFICATION
THE CONTRACTOR SHALL GIVE THE CITY OF CANTON, (330) 489-3381, AND THE ODOT DISTRICT TRAFFIC OFFICE, (330) 786-3145, TEN (10) WORKING DAYS NOTICE PRIOR TO THE SIGNAL BEING PLACED IN THE "FLASH" MODE.

THE SIGNAL INSTALLATION SHALL BE INSPECTED BY CITY OF CANTON AND ODOT DISTRICT PERSONNEL PRIOR TO BEING PLACED IN THE "STOP-AND-GO" MODE. ALL DEFICIENCIES OF AN OPERATIONALLY CRITICAL NATURE SHALL BE CORRECTED AND APPROVED BY THE CITY OF CANTON AND ODOT DISTRICT TRAFFIC OFFICE BEFORE PLACING THE SIGNAL IN THE "STOP-AND-GO" MODE.

CONTINGENCY QUANTITIES
THE CONTRACTOR SHALL NOT ORDER MATERIALS OR PERFORM WORK FOR ITEMS DESIGNATED BY PLAN NOTE TO BE USED "AS DIRECTED BY THE ENGINEER" UNLESS AUTHORIZED BY THE ENGINEER. THE ACTUAL WORK LOCATIONS AND QUANTITIES USED FOR SUCH ITEMS SHALL BE INCORPORATED INTO THE FINAL CHANGE ORDER GOVERNING COMPLETION OF THIS PROJECT.

BICYCLE SIGNALS
BICYCLE SIGNALS HAVE BEEN APPROVED FOR THIS PROJECT BY THE FHWA FOR A PERIOD OF 365 DAYS. BIKE SIGNALS ARE EXPERIMENTAL AND HAVE NOT YET BEEN ACCEPTED BY THE FHWA. AFTER THE 365 DAY EXPERIMENTAL PERIOD, THE FHWA SHALL EITHER ACCEPT OR REJECT THE USE OF THE BICYCLE SIGNALS. IF THE USE OF BICYCLE SIGNALS IS ACCEPTED BY THE FHWA, THE BICYCLE SIGNALS SHALL REMAIN IN PLACE. IF THE USE OF BICYCLE SIGNALS IS REJECTED BY THE FHWA, THE CITY OF CANTON SHALL REPLACE ALL BICYCLE SIGNALS WITH STANDARD TRAFFIC SIGNALS SUPPLEMENTED WITH A SIGN INDICATING "BICYCLE SIGNAL ONLY".

TRENCH IN PAVED AREA, (BY TYPE), AS PER PLAN
IN ADDITION TO THE REQUIREMENTS OF 625.11, THIS ITEM SHALL INCLUDE FULL SLAB REPLACEMENT WHEN TRENCHING IN SIDEWALK. BORING OR JACKING THE CONDUIT UNDER THE PAVEMENT CAN BE PERFORMED IN LIEU OF TRENCHING. IF BORING OR JACKING IS PERFORMED IN LIEU OF TRENCHING, THE CONDUIT PLACED SHALL BE 725.04. ANY EXTRA COST FOR THE 725.04 CONDUIT SHALL BE INCLUDED IN THIS ITEM.

ITEM 625 - PULL BOX, 725.06, (BY SIZE), AS PER PLAN
PULL BOXES SHALL BE MANUFACTURED BY CARSON BROOKS (MODEL #1324 AND #1730), QUAZITE (MODEL #PG1324BA18/PG1324HA44 AND #PG1730BA18/PG1730HA44), OR SYNERTECH (MODEL #S1324 HBB0A18 AND #S1730 HBB0118) OR APPROVED EQUAL. ALL PULL BOXES SHALL INCLUDE A POLYMER CONCRETE RING AND COVER TYPE, OR EQUAL, AND SHALL BE MARKED "TRAFFIC". THE PULL BOX SHALL BE FIBERGLASS REINFORCED POLYESTER, OR EQUAL, WITH INSERTS AND SHALL BE 18" IN DEPTH. EACH PULL BOX SHALL INCLUDE TWO (2) STAINLESS STEEL HEX BOLTS. EACH PULL BOX AND COVER SHALL HAVE A MINIMUM LOAD RATING OF 20,000 POUNDS CAPACITY IN ACCORDANCE WITH THE WESTERN UNDERGROUND COMMITTEE GUIDE 3.6. UNDERDRAINS SHALL NOT BE INSTALLED IN PULL BOXES.

ITEM 632 - SIGNAL SUPPORT, MISC.: NOSTALGIA SIGNAL SUPPORT - UNION METAL CORPORATION (ONE-ARM AND TWO-ARM)
NOSTALGIA SIGNAL SUPPORTS (MAST ARM POLES AND ARMS) SHALL BE PACIFIC FAMILY 50312GF SERIES (SEE DETAILS ON PLAN SHEETS XX-XX) AND MANUFACTURED BY:

UNION METAL CORPORATION
1432 MAPLE AVENUE NE
P.O. BOX 9920
CANTON, OH 44711
PHONE: 330-456-7653

THE CONTRACTOR SHALL FURNISH AND INSTALL NOSTALGIA SIGNAL SUPPORTS AS PER PLANS. ALL HARDWARE INCLUDING LUMINAIRES AND RELATED EQUIPMENT SHALL BE INCLUDED WITH THIS ITEM.

THE MANUFACTURER SHALL PROVIDE WRITTEN CERTIFICATION TO THE CITY THAT THE ACCEPTED POLE, ARM, LUMINAIRE AND DECORATIVE SHROUD, IS OR WILL BECOME A STOCK ITEM, READILY AVAILABLE WITH REPLACEMENT PARTS FOR MINIMUM (10) YEAR PERIOD. ALL MATERIAL SUPPLIES SHALL BE WARRANTED BY THE MANUFACTURER FOR ONE (1) YEAR AFTER DELIVERY AGAINST FAULTY MATERIALS AND WORKMANSHIP. THE POLE TOP SHALL BE MECHANICALLY ATTACHED TO THE TOP OF THE POLE SHAFT TO PROVIDE ACCESS FOR WIRING SIGNALS SECURED BY A J-HOOK WIRE SUPPORT. AN OPTIONAL OUTLET FRAME SHALL BE INTEGRALLY WELDED INTO THE POLE SHAFT TO ACCOMMODATE A 20A $^{15}/_{32}$ 125V GFCI DUPLEX RECEPTACLE WHICH IS ALSO INCLUDED. THE RECEPTACLE COVER SHALL BE WEATHERPROOF WHILE IN USE AND PAINTED TO MATCH POLE. THE MAST ARM SHALL BE DRILLED IN THE FIELD AT REQUIRED SIGNAL LOCATIONS. TWO (2) RUBBER GROMMETS SHALL BE FURNISHED WITH EACH MAST ARM. SIGNAL HANGER CLAMPS SHALL BE SUPPLIED BY THE SIGNAL SUPPLIER OR MANUFACTURER, AS REQUIRED. A PERMANENT LEGIBLE MARKING INDICATION SHALL BE INCLUDED ON EACH SIGNAL SUPPORT AND ARM. THE FOLLOWING INDICATIONS SHALL BE REQUIRED AS A MINIMUM:

A. POLE INDICATIONS: MONTH/DATE OF FABRICATION; POLE GAUGE; BOTTOM DIAMETER; POLE HEIGHT; BOLT CIRCLE; ANCHOR BOLT DIAMETER; FLANGE BOLT DIAMETER; AND INTERSECTION LOCATION INCLUDING CORNER QUADRANT.
B. ARM INDICATIONS: MONTH/DATE OF FABRICATION; ARM GAUGE; ARM DIAMETER; ARM LENGTH; CONNECTING FLANGE BOLT DIAMETER; AND INTERSECTION LOCATION INCLUDING CORNER QUADRANT.

THE ORNAMENTAL BASE SHALL BE UNION METAL BASE NO. 731. THE FOUNDATION SURFACE SHALL BE LEVEL IN ORDER TO ACCEPT THE BASE ASSEMBLY. ALL PROPOSED EXTERIOR CONNECTIONS (PEDESTRIAN SIGNAL HEADS, SCHOOL SPEED LIMIT SIGNS, ETC.) TO NOSTALGIA SIGNAL POLES SHALL BE FIELD DRILLED. BANDING OR STRAPPING ON THE NOSTALGIA SIGNAL POLES SHALL NOT BE PERMITTED.

ITEM 632 - PEDESTAL, MISC.: NOSTALGIA PEDESTAL - UNION METAL CORPORATION (8" AND 18")
NOSTALGIA PEDESTALS SHALL BE PACIFIC FAMILY P2000G SERIES (SEE DETAILS ON SHEETS XX-XX) AND MANUFACTURED BY:

UNION METAL CORPORATION
1432 MAPLE AVENUE NE
P.O. BOX 9920
CANTON, OH 44711
PHONE: 330-456-7653

THE CONTRACTOR SHALL FURNISH AND INSTALL NOSTALGIA SIGNAL SUPPORTS AS PER PLANS. PEDESTAL SHALL INCLUDE HANDHOLE, CHAIN, AND COVER. ALL HARDWARE INCLUDING LUMINAIRES AND RELATED EQUIPMENT SHALL BE INCLUDED WITH THIS ITEM. THE ENTIRE ASSEMBLY SHALL BE DESIGNED TO MEET THE REQUIREMENTS OF AASHTO. A STEEL FABRICATION TENON SHALL BE WELDED TO THE TOP OF THE SHAFT AND SIZED TO ACCEPT PEDESTRIAN SIGNALS AS REQUIRED. THE ORNAMENTAL BASE SHALL BE UNION METAL CORPORATION BASE NO. 74 AND SHALL BE LEVEL IN ORDER TO ACCEPT THE BASE ASSEMBLY AND SHALL BE AT LEAST AS LARGE AS THE BOTTOM DIMENSION OF THE ORNAMENTAL BASE CASTING. ALL PROPOSED EXTERIOR CONNECTIONS (PEDESTRIAN SIGNAL HEADS, SCHOOL SPEED LIMIT SIGNS, ETC.) TO NOSTALGIA PEDESTALS SHALL BE FIELD DRILLED. BANDING OR STRAPPING ON THE NOSTALGIA PEDESTALS SHALL NOT BE PERMITTED.

NOSTALGIA SIGNAL SUPPORT AND PEDESTAL PAINTING
NOSTALGIA SIGNAL SUPPORT, ARMS, AND LUMINAIRE BRACKETS SHALL BE PAINTED (SURFACE PREPARATION, PRIMER APPLICATION, AND FINISH COATING OF GALVANIZED SUBSTRATES). THE FOLLOWING SHALL APPLY:

A. SURFACE PREPARATION: PRE-CLEAN SUBSTRATES TO SSPC-SP-1 SOLVENT CLEANING SPECIFICATION. PREPARE GALVANIZED SUBSTRATES BY ABRASIVE BLASTING TO SSPC-SP-7 BRUSH-OFF BLAST CLEANING SPECIFICATION.
B. COLOR: THE COLOR OF THE POLES SHALL BE CBD GREEN (COLOR AND FORMULA IS ON FILE AT THE MIDWEST TANK SERVICES CO., INC., CANTON, OH).
C. MATERIALS:
   a. PRIMER - APPLY ONE (1) COAT OF POLYAMIDE UNIVERSAL EPOXY PRIMER - LIGHT GRAY AT A DRY FILM THICKNESS OF 2.0-4.0 MILS.
   b. 1ST INTERMEDIATE - APPLY ONE (1) COAT OF HIGH BUILD EPOXY-BUFF COLOR AT A DRY FILM THICKNESS OF 4.0-8.0 MILS.
   c. 2ND INTERMEDIATE - APPLY ONE (1) COAT OF ALIPHATIC ACRYLIC URETHANE-CBD GREEN AT A A DRY FILM THICKNESS OF 2.0-3.0 MILS.
   d. FINISH - APPLY ONE (1) COAT OF ALIPHATIC URETHANE-CLEAR AT A DRY FILM THICKNESS OF 2.0-3.0 MILS.
D. APPLICATION:
   APPLICATION(S) OF COATING(S) SHALL BE SPRAY METHOD ONLY BY INDUSTRY STANDARDS OF GOOD WORKMANSHIP AND PRACTICES.
E. INSPECTION:
   INSPECTION OF APPLIED COATING SHALL BE IN ACCORDANCE WITH THE SOCIETY FOR PROTECTIVE COATINGS (SSPC) PAINT APPLICATION STANDARD NO. 2; MEASUREMENT OF DRY COATING THICKNESS WITH MAGNETIC GAGES (SSPC-PA2).
F. WARRANTY:
   COATINGS MANUFACTURER SHALL PROVIDE A TEN (10) YEAR MATERIALS PERFORMANCE GUARANTEE.

THE COST FOR NOSTALGIA SIGNAL SUPPORT AND PEDESTAL PAINTING SHALL BE INCLUDED IN AND INCIDENTAL TO THE NOSTALGIA SIGNAL SUPPORT AND PEDESTAL BID ITEMS (BID ITEMS 632).

ITEM 632 - SIGNAL SUPPORT FOUNDATION, AS PER PLAN
THIS PROJECT REQUIRES CONSTRUCTION OF SIGNAL SUPPORT FOUNDATIONS IN LOCATIONS WHICH CONTAIN NUMEROUS EXISTING UNDERGROUND UTILITIES. ORDERS FOR SIGNAL POLES AND MAST ARMS SHALL BE PLACED SYSTEMATICALLY AFTER THEIR RESPECTIVE FOUNDATIONS HAVE BEEN CONSTRUCTED. FOUNDATIONS THAT HAVE BEEN CONSTRUCTED SHALL BE PROTECTED AS PER SECTION 107.07 OF THE CONSTRUCTION AND MATERIALS SPECIFICATIONS. WITHIN TWO (2) WEEKS OF RECEIVING A SIGNED CONTRACT, THE CONTRACTOR SHALL LAYOUT THE PERIMETER OF EACH FOUNDATION THEN CONTACT OUPS AND ODOT (330-297-0801, EXT. 298). A MEETING BETWEEN THE CONTRACTOR, ENGINEER AND A REPRESENTATIVE FROM THE CITY OF CANTON WILL BE HELD ON SITE NO LATER THAN TWO (2) WEEKS AFTER THE OUPS NOTIFICATION. BASED UPON THE PRIORITIES DETERMINED AT THIS MEETING, THE CONTRACTOR WILL CONSTRUCT FOUNDATIONS BEGINNING WITH THE HIGHEST PRIORITY FIRST. IF A UTILITY OR OTHER CONFLICT EXISTS WHICH REQUIRES THAT A SIGNAL SUPPORT BE CONSTRUCTED AT A LOCATION OTHER THAN WHAT IS INDICATED IN THE PLAN, THE ENGINEER SHALL DETERMINE WHETHER THE SPECIFIED MAST ARM LENGTH IS APPROPRIATE. IF A LONGER ARM IS REQUIRED, WITHIN TEN (10) WORKING DAYS, THE CONTRACTOR WILL BE PROVIDED WITH REVISED POLE AND ARM DATA. THE CONTRACTOR SHALL NOT ORDER THE POLES PRIOR TO RECEIVING THIS DATA. SUPPORT FOUNDATION LOCATIONS SHALL BE ADJUSTED ONLY WHEN APPROVED BY THE ENGINEER. THE CONTRACTOR IS ADVISED TO LOCATE AND CONSTRUCT THE SIGNAL SUPPORT FOUNDATIONS AS SOON AS POSSIBLE IN ORDER TO PROVIDE AMPLE LEAD TIME TO ORDER THE SIGNAL SUPPORTS AND THEIR ASSOCIATED MAST ARMS. ALL FOUNDATIONS SHALL BE HAND EXCAVATED UNLESS OTHERWISE DIRECTED BY THE ENGINEER. NO TIME EXTENSIONS SHALL BE GRANTED FOR DELAYS WHICH ARE CAUSED BY THE CONTRACTOR'S FAILURE TO PLAN FOUNDATION WORK AS SOON AS POSSIBLE IN THE CONTRACTOR'S PROGRESS SCHEDULE.

PAYMENT FOR ITEM 632 - SIGNAL SUPPORT FOUNDATION, AS PER PLAN SHALL BE MADE AT THE UNIT CONTRACT PRICE BID PER EACH. PAYMENT SHALL BE FULL COMPENSATION FOR ALL LABOR, MATERIALS, TOOLS, EQUIPMENT, AND OTHER INCIDENTALS NECESSARY TO EXCAVATE AND BUILD THE FOUNDATION SYSTEM, COMPLETE IN PLACE AND ACCEPTED.

BECAUSE OF THE RECOGNIZED TIME DELAY BETWEEN THE CONSTRUCTION OF THE FOUNDATIONS AND THE DELIVERY OF THE SIGNAL SUPPORTS AND/OR PEDESTALS FROM THE MANUFACTURER, THE CONTRACTOR SHALL BE RESPONSIBLE FOR PROTECTING THE NEW CONSTRUCTED FOUNDATIONS BY A DEVICE SUCH AS A WOODEN BOX IN ACCORDANCE WITH ODOT SECTION 107.07. THE TYPE OF PROTECTIVE DEVICE SHALL BE APPROVED BY ODOT PRIOR TO ITS APPLICATION IN THE FIELD. TRAFFIC CONES SHALL NOT BE ACCEPTABLE. PROTECTIVE DEVICES CAN BE REUSED IF THEY ARE NO LONGER NEEDED AT A PREVIOUS INTERSECTION AND THEY MEET ODOT 107.07.

FOUNDATIONS FOR NOSTALGIA SIGNAL SUPPORTS SHALL BE CONSTRUCTED AS PER DETAILS ON PLAN SHEET XX.

ITEM 632 - PEDESTAL FOUNDATION, AS PER PLAN
FOUNDATIONS FOR NOSTALGIA PEDESTALS SHALL BE CONSTRUCTED AS PER DETAILS ON PLAN SHEET XX.

CALCULATED HEH
CHECKED WLC

TRAFFIC CONTROL NOTES

WALNUT & CHERRY
COMPLETE STREET
BIKE LANES

CN
1

R:\Stark\SARTA\Task 3 Canton\STA\91592\signals\sheets\91592CN001.dgn 2/2/2012 4:36:10 PM jroth

ITEM 632 - VEHICULAR SIGNAL HEAD, (LED), 3-SECTION, 12" LENS, 1-WAY, POLYCARBONATE, AS PER PLAN
IN ADDITION TO THE REQUIREMENTS OF CMS 632 AND 732, THE FOLLOWING REQUIREMENTS SHALL ALSO APPLY:

A. VEHICULAR SIGNAL HEADS SHALL BE FREE SWINGING.
B. ALL UPPER SIGNAL SUPPORT HARDWARE AND PIPING UP TO AND INCLUDING THE WIRE INLET FITTING SHALL SHALL BE FERROUS METAL FOR SIGNAL DISPLAYS OF TWO OR MORE SECTIONS.
C. THE ENTRANCE FITTING SHALL BE OF THE TRI-STUD DESIGN WITH SERRATED RINGS IN ORDER TO ACHIEVE POSITIVE LOCKING.
D. VEHICULAR SIGNAL HEADS SHALL BE PROVIDED WITH A PIVOT AND LOCK BALANCE ADJUSTER. ALL BALANCE ADJUSTERS SHALL HAVE A MINIMUM THREE-QUARTER INCH (19 MILLIMETER) EYE BOLT AND THREE-QUARTER INCH (19 MILLIMETER) WIDE SLOT. EYEBOLTS ARE CAST FROM 316 STAINLESS STEEL AND PROVIDED WITH A SATIN FINISH. THREE-QUARTER INCH (19 MILLIMETER) BODY HALVES ARE CAST FROM A MINIMUM 65-45-12 DUCTILE IRON AND PROVIDED WITH A BRIGHT ZINC FINISH (ZNI).
E. ALL LAMP UNITS SHALL BE THE 12 INCH (300 MILLIMETER) SIZE AND BE EQUIPPED WITH 12"X11" CUTAWAY VISORS, UNLESS OTHERWISE NOTED IN THE PLANS.
F. SIGNAL HEADS AND VISORS SHALL BE CONSTRUCTED OF POLYCARBONATE PLASTIC AND MEET ITE SPECIFICATIONS.
G. PIPE, SPACERS AND FITTINGS CONSTRUCTED OF ALUMINUM.
H. SIGNALS DENOTED AS "PROPOSED BICYCLE SIGNAL HEADS" SHALL INCLUDE THREE (3) 12" BICYCLE LED TRAFFIC MODULES PER SIGNAL HEAD, MANUFACTURED BY DIALIGHT CORPORATION (1501 ROUTE 34 SOUTH, FARMINGDALE, NJ 07727, 732-919-3119, WWW.DIALIGHT.COM) OR APPROVED EQUAL.
   a. OPERATING VOLTAGE RANGE: 80 VAC TO 135 VAC 135 VAC (120 VAC NOMINAL)
   b. OPERATING TEMPERATURE RANGE: -40°C TO +74°C
   c. MEETS ITE VTCSH LED CIRCULAR SUPPLEMENT DATED JUNE 27, 2005 COLOR REQUIREMENTS
   d. QUICK CONNECT TERMINALS WITH SPADE/TAB ADAPTERS
   e. 75 mSec TURN ON TIME
   f. RF IMMUNITY 10V/M, 80 MHz TO 1 Ghz
   g. COMPLIES WITH FCC TITLE 47, SUBPART B SECTION 15 FOR RADIATED EMISSIONS
   h. VIBRATION RESISTANT TO MIL-STD-883, TEST METHOD 2007
   i. MOISTURE RESISTANT PER MIL-STD-810F, METHOD 506.4 FOR RAIN AND BLOWING RAIN
   j. POWER SUPPLY IS CONFORMAL COATED
   k. TRANSIENT SUPPRESSION EXCEEDS ITE VTCSH_LED REQUIREMENTS
   l. ALL PRODUCTS TRACEABLE BY SERIAL NUMBER
I. PROPER EXTERIOR COLORS SHALL BE OBTAINED BY USE OF COLORED PLASTIC MATERIAL RATHER THAN PAINTING. ALL EXTERIOR COLOR SHALL BE FEDERAL HIGHWAY YELLOW OR BLACK AT INTERSECTIONS THAT CONTAIN NOSTALGIA SIGNAL SUPPORTS AND PEDESTALS. THE FOLLOWING IS A SUMMARY OF THE SIGNAL HEADS NEEDED:

3-SECTION, 1-WAY (BLACK COLORED HEADS)	17 EA.
12" BICYCLE LED TRAFFIC MODULE	
RED (DIALIGHT PART NUMBER 433-1210-003XLB)	15 EA.
YELLOW (DIALIGHT PART NUMBER 433-3230-901XLB)	15 EA.
GREEN (DIALIGHT PART NUMBER 433-2220-001XLB)	15 EA.

ITEM 632 - VEHICULAR SIGNAL HEAD, (LED), 3-SECTION, 12" LENS, 1-WAY, POLYCARBONATE, AS PER PLAN, CONT.
THE CONTRACTOR SHALL PROVIDE THE CITY, IN WRITING, THE LED MANUFACTURER NAME, SERIAL NUMBER, PART NUMBER, DESCRIPTION OF LAMP, AND DATE OF MANUFACTURE FOR ALL LED UNITS TO BE USED IN THE TRAFFIC SIGNAL HEADS PRIOR TO INSTALLATION, FOR ACCEPTANCE AND WARRANTY PURPOSES. THE INFORMATION SHALL BE SENT TO THE FOLLOWING LOCATION:

TRAFFIC ENGINEERING DEPARTMENT
ATTN: NICHOLAS LOUKAS, P.E.
2436 30TH STREET NE
CANTON, OHIO 44705

ITEM 632 " VEHICULAR SIGNAL HEAD, (LED), 3-SECTION, 12" LENS, 1-WAY, POLYCARBONATE, AS PER PLAN " SHALL BE MEASURED BY THE NUMBER OF COMPLETE UNITS FURNISHED AND INSTALLED, AND WILL INCLUDE ALL SUPPORT AND MOUNTING HARDWARE, DISCONNECT HANGERS, CLOSURE CAPS, DIMMERS AND LAMPS AS SPECIFIED.

ITEM 632 - SIGNALIZATION, MISC.: BICYCLE SIGNAL POST TOP ASSEMBLY - PELCO INC.
AT LOCATIONS WHERE BICYCLE SIGNALS ARE TO BE MOUNTED ON EXISTING PEDESTALS WITH PEDESTRIAN SIGNAL HEADS MOUNTED USING PIPE BRACKET TYPE MOUNTING HARDWARE, THE EXISTING MOUNTING HARDWARE SHALL BE REPLACED WITH A BICYCLE SIGNAL POST TOP ASSEMBLY DESIGNED BY PELCO, INC. FOR PRICING AND DELIVERY, THE CONTRACTOR SHALL CONTACT PATH MASTER, INC. (1960 MIDWAY DRIVE, TWINSBURG, OHIO 44087, (330) 425-4994, WWW.PATHMASTERINC.COM). WHEN PLACING THE ORDER, THE CONTRACTOR SHALL PROVIDE THE NAME AND CONTACT INFORMATION OF THE PELCO, INC. TECHNICAL SALES SUPPORT REPRESENTATIVE LISTED BELOW:

LOGAN HOWELL
PHONE: 405-340-3434
EMAIL: logan.howell@pelcoinc.com

THE CONTRACTOR SHALL ALSO PROVIDE THE CUT SHEET CREATED BY PELCO, INC., A COPY OF WHICH WILL BE ON FILE AT THE CITY OF CANTON TRAFFIC ENGINEERING DEPARTMENT.

PAYMENT FOR ITEM 632 - SIGNALIZATION, MISC.: BICYCLE SIGNAL POST TOP ASSEMBLY - PELCO INC. SHALL BE MADE AT THE UNIT CONTRACT PRICE BID PER EACH AND WILL INCLUDE ALL NECESSARY SUPPORT OR MOUNTING HARDWARE.

SIGNAL CABLE CONTINGENCY QUANTITIES
THE FOLLOWING ESTIMATED QUANTITIES HAVE BEEN INCLUDED IN THE GENERAL SUMMARY FOR USE AS DETERMINED BY THE ENGINEER TO ACCOUNT FOR CABLE LENGTH DISCREPANCIES THAT MAY BE ENCOUNTERED IN THE FIELD DUE TO UNRECORDED MODIFICATIONS MADE TO CONDUIT RUNS AND SIGNAL EQUIPMENT PLACEMENT DURING THE INITIAL CONSTRUCTION OF THE TRAFFIC SIGNAL SYSTEM.

ITEM 632 - SIGNAL CABLE, 7 CONDUCTOR, NO. 14 AWG	500 FT.
ITEM 632 - PREEMPTION DETECTOR CABLE, AS PER PLAN	120 FT.

ITEM 632 - REMOVAL OF MISC. TRAFFIC SIGNAL ITEM - SIGNAL SUPPORT
ITEM 632 - REMOVAL OF MISC. TRAFFIC SIGNAL ITEM - PEDESTAL
THE REMOVAL SHALL CONSIST OF SIGNAL SUPPORTS, PEDESTALS, ALL MOUNTING HARDWARE AND FOUNDATIONS. EXTREME CARE SHALL BE EXERCISED BY THE CONTRACTOR FOR ALL ITEMS REMOVED FOR STORAGE. IF AN ITEM IS DAMAGED AND DETERMINED TO BE NON-FUNCTIONAL BY THE ENGINEER AND THAT ITEM WAS FUNCTIONING PRIOR TO ITS REMOVAL BY THE CONTRACTOR, THE DAMAGED ITEM SHALL BE REPLACED FULLY, IN KIND BY THE CONTRACTOR.

UNLESS OTHERWISE DESIGNATED, ALL SIGNAL SUPPORTS, ARMS AND PEDESTALS REMOVED SHALL BE DELIVERED TO THE CITY OF CANTON TRAFFIC SIGN AND PAINT DEPARTMENT AT 2506 CLEVELAND AVE. SW, CANTON, OHIO. UNLESS OTHERWISE DESIGNATED. ALL OTHER ITEMS REMOVED SHALL BE DELIVERED TO THE CITY OF CANTON TRAFFIC SIGNAL DEPARTMENT AT 2436 30TH ST. NE, CANTON, OHIO.

ITEM 633 - PREEMPTION, AS PER PLAN
THIS ITEM OF WORK SHALL CONSIST OF REMOVING AND REERECTING PREEMPTION EQUIPMENT ON MAST ARMS AT THE LOCATIONS SHOWN IN THE PLANS.

EACH INTERSECTION SHOWN IN THE PLANS SHALL HAVE THE FOLLOWING COMPONENTS:
1. PREEMPT RECEIVING UNIT.
2. PREEMPT DETECTOR CABLE.
3. PREEMPT PHASE SELECTOR ASSEMBLY AND INTERFACE WIRING PANEL.
4. CONFIRMATION LIGHT.

THE EQUIPMENT SHALL BE THOROUGHLY TESTED AFTER REERECTION. AS A MINIMUM, THE CONTRACTOR SHALL VERIFY THAT ALL CONNECTIONS ARE PROPERLY MADE TO THE CONTROLLER CABINETS. THE CONTRACTOR SHALL CHECK THAT THE RANGE SETTING IS PROPER FOR EACH INTERSECTION. THE CONTRACTOR SHALL DETERMINE THAT ALL PHASE SELECTORS ARE SELECTING THE PROPER PHASE AND TIMING ACCURATELY. THE CONTRACTOR SHALL VERIFY THAT ALL VEHICLE EMITTERS ARE BEING PROPERLY DETECTED. THE SYSTEM SHALL BE CAPABLE OF PREEMPTING AND RECEIVING PRIORITY FOR EACH APPROACH TO THE INTERSECTION. IT SHALL BE POSSIBLE TO DETECT THE EMERGENCY VEHICLE UP TO 1200 FEET FROM THE INTERSECTION.

IF THE PREEMPTION EQUIPMENT CANNOT BE REERECTED, THEN THE CONTRACTOR SHALL SUPPLY THE NECESSARY COMPONENTS, EACH BID SEPARATELY. ALL EQUIPMENT SUPPLIED BY THE CONTRACTOR SHALL BE COMPATIBLE WITH THE CITY OF CANTON'S EXISTING PREEMPTION SYSTEM.

PAYMENT FOR ITEM 633 "PREEMPTION, AS PER PLAN" SHALL BE MADE AT THE CONTRACT UNIT PRICE FOR EACH PREEMPTION IN PLACE AND FULLY OPERATION AS SHOWN IN THE PLANS, EXCEPT FOR THOSE ITEMS BID SEPARATELY.

ITEM 633 - PREEMPTION RECEIVING UNIT, AS PER PLAN
THIS ITEM OF WORK SHALL CONSIST OF REMOVING AND REERECTING PREEMPTION RECEIVING UNITS ON MAST ARMS AT THE LOCATIONS SHOWN IN THE PLANS. RECEIVING UNITS SHALL BE REMOVED AND REINSTALLED AS NEEDED TO ACCOMMODATE SIGNALS AND SIGNS. RECEIVING UNITS SHALL BE REINSTALLED WITH MAST ARM MOUNTING HARDWARE AS SHOWN IN THE PLANS.

IF THE RECEIVING UNITS ARE DAMAGED OR CANNOT BE REINSTALLED, THE CONTRACTOR SHALL FURNISH PREEMPTION RECEIVING UNITS WITH 60-MONTH WARRANTIES OR FOR THE MANUFACTURER'S STANDARD WARRANTY, WHICHEVER IS GREATER. ENSURE THAT THE WARRANTY PERIOD BEGINS ON THE DATE OF SHIPMENT TO THE PROJECT. ENSURE THAT EACH UNIT HAS A PERMANENT LABEL OR STAMP INDICATING THE DATE OF SHIPMENT. THE RECEIVING UNITS SHALL BE COMPATIBLE WITH THE CITY OF CANTON'S EXISTING PREEMPTION SYSTEM.

PAYMENT FOR ITEM 633 "PREEMPTION RECEIVING UNIT" SHALL BE AT THE CONTRACT UNIT FOR EACH RECEIVING UNIT IN PLACE, COMPLETELY INSTALLED AT THE LOCATION SHOWN IN THE PLANS, WIRED, TESTED AND ACCEPTED.

ITEM 633 - PREEMPTION CONFIRMATION LIGHT
THIS ITEM OF WORK SHALL CONSIST OF REMOVING AND REERECTING PREEMPTION CONFIRMATION LIGHTS ON MAST ARMS AT THE LOCATIONS SHOWN IN THE PLANS. CONFIRMATION LIGHTS SHALL BE REMOVED AND REINSTALLED AS NEEDED TO ACCOMMODATE SIGNALS AND SIGNS. CONFIRMATION LIGHTS SHALL BE REINSTALLED WITH MAST ARM MOUNTING HARDWARE AS SHOWN IN THE PLANS.

IF THE CONFIRMATION LIGHTS ARE DAMAGED OR CANNOT BE REINSTALLED, THE CONTRACTOR SHALL FURNISH CONFIRMATION LIGHTS WITH 60-MONTH WARRANTIES OR FOR THE MANUFACTURER'S STANDARD WARRANTY, WHICHEVER IS GREATER. ENSURE THAT THE WARRANTY PERIOD BEGINS ON THE DATE OF SHIPMENT TO THE PROJECT. ENSURE THAT EACH UNIT HAS A PERMANENT LABEL OR STAMP INDICATING THE DATE OF SHIPMENT. THE CONFIRMATION LIGHTS SHALL BE COMPATIBLE WITH THE CITY OF CANTON'S EXISTING PREEMPTION SYSTEM.

PAYMENT FOR ITEM 633 "PREEMPTION RECEIVING UNIT" SHALL BE AT THE CONTRACT UNIT FOR EACH RECEIVING UNIT IN PLACE, COMPLETELY INSTALLED AT THE LOCATION SHOWN IN THE PLANS, WIRED, TESTED AND ACCEPTED.

ITEM 633 - PREEMPTION DETECTOR CABLE, AS PER PLAN
THIS ITEM SHALL CONSIST OF FURNISHING AND INSTALLING PREEMPTION DETECTOR HOME RUN CABLE IN THE LOCATIONS SHOWN IN THE PLANS. DETECTOR CABLE SHALL BE REUSED WHENEVER POSSIBLE AFTER MOVING THE RECEIVING UNITS. THE DETECTOR CABLE SHALL CONNECT THE PREEMPT RECEIVING UNITS TO THE PHASE SELECTORS IN THE LOCAL CONTROLLER CABINET.

PREEMPTION DETECTOR CABLE SHALL CONFORM TO ODOT SPECIFICATION 632. ONLY ONE EXTERNAL SPLICE SHALL BE PERMITTED BETWEEN PREEMPTION RECEIVER UNIT AND CONTROLLER CABINET. THIS SPLICE SHALL MEET THE REQUIREMENTS OF C&MS 632.23 USING A WATERPROOF EPOXY SPLICE KIT. THE CABLE SHALL BE APPROVED FOR BOTH OVERHEAD AND UNDERGROUND USE. THE JACKET SHALL WITHSTAND EXPOSURE TO SUNLIGHT AND ATMOSPHERIC TEMPERATURES AND STRESSES REASONABLY EXPECTED IN NORMAL INSTALLATIONS.

PREEMPTION DETECTOR CABLE SHALL BE NO. 20 AWG SHIELDED, 300 VOLT, TYPE PLTC, 2 CONDUCTOR CABLE IN ACCORDANCE WITH IMSA 50-2. PREEMPTION DETECTOR CABLE SHALL BE APPROVED FOR BOTH OVERHEAD AND UNDERGROUND USE. THE JACKET SHALL WITHSTAND EXPOSURE TO SUNLIGHT AND ATMOSPHERIC TEMPERATURES AND STRESSES EXPECTED IN NORMAL INSTALLATIONS.

PAYMENT FOR ITEM 633 "PREEMPTION DETECTOR CABLE" SHALL BE MADE AT THE CONTRACT UNIT PRICE PER FOOT FOR THE CABLE FURNISHED, IN PLACE, ALL CONNECTIONS MADE AND WIRING COMPLETED, TESTED AND ACCEPTED.

CALCULATED HEH CHECKED WLC

TRAFFIC CONTROL NOTES

WALNUT & CHERRY COMPLETE STREET BIKE LANES

CN 2

MAINTENANCE OF TRAFFIC SIGNAL/FLASHER INSTALLATION
THE CONTRACTOR SHALL BE RESPONSBLE FOR MAINTAINING TRAFFIC SIGNAL/FLASHER INSTALLATIONS WITHIN THE PROJECT UNDER THE FOLLOWING CONDITIONS:

1. EXISTING SIGNAL/FLASHER INSTALLATIONS WHICH THE PLANS REQUIRE THE CONTRACTOR TO ADJUST, MODIFY, ADD ONTO OR REMOVE, OR WHICH THE CONTRACTOR ACTUALLY ADJUSTS, MODIFIES OR OTHERWISE DISTURBS. THE CONTRACTOR SHALL BE RESPONSIBLE FOR THE ENTIRE INSTALLATION (AT AN INTERSECTION) FROM THE TIME HIS OPERATIONS FIRST DISTURB THE INSTALLATION UNTIL THE INSTALLATION HAS BEEN SUBSEQUENTLY REMOVED OR MODIFIED AND THE WORK ACCEPTED.

2. NEW OR REUSED SIGNAL/FLASHER INSTALLATIONS OR DEVICES, INSTALLED BY THE CONTRACTOR. THE CONTRACTOR SHALL BE RESPONSBILE FOR MAINTENANCE OF THESE FROM THE TIME OF INSTALLATION UNTIL THE WORK IS ACCEPTED.

THE CONTRACTOR SHALL CORRECT AS QUICKLY AS POSSIBLE ALL OUTAGES OR MALFUNCTIONS. HE SHALL PROVIDE THE MAINTAINING AGENCY AND THE ENGINEER SUCH ADDRESSES AND PHONE NUMBERS WHERE HIS MAINTENANCE FORCES CAN BE CONTACTED. THE CONTRACTOR SHALL PROVIDE ONE OR MORE PERSONS TO RECEIVE ALL CALLS AND DISPATCH THE NECESSARY MAINTENANCE FORCES TO CORRECT OUTAGES. SUCH A PERSON OR PERSONS MAY BE USED TO PERFORM OTHER DUTIES AS LONG AS PROMPT ATTENTION IS GIVEN TO THESE CALLS AND A PERSON IS READILY AVAILABLE CONTINUOUSLY 24 HOURS A DAY, 7 DAYS A WEEK. ALL LAMP OUTAGES, CABLE OUTAGES, ELECTRICAL FAILURES, EQUIPMENT MALFUNCTIONS AND MISALIGNED SIGNAL HEADS SHALL BE CORRECTED TO THE SATISFACTION OF THE ENGINEER WITH THE SIGNAL BACK TO SERVICE WITHIN FOUR HOURS AFTER THE CONTRACTOR HAS BEEN NOTIFIED OF THE OUTAGE.

IN THE EVENT NEW SIGNALS ARE DAMAGED PRIOR TO ACCEPTANCE, ALL DAMAGED EQUIPMENT EXCEPT POLES AND CONTROL EQUIPMENT SHALL BE REPLACED BY THE CONTRACTOR TO THE SATISFACTION OF THE ENGINEER WITH THE SIGNAL BACK IN SERVICE WITHIN 8 HOURS AFTER THE CONTRACTOR'S NOTIFICATION OF THE OUTAGE. THE CONTRACTOR SHALL ARRANGE FOR FULL TRAFFIC CONTROL UNTIL THE SIGNAL IS BACK IN OPERATION.

IF POLES AND/OR CONTROL EQUIPMENT ARE DAMAGED AND MUST BE REPLACED, THE CONTRACTOR SHALL MAKE TEMPORARY REPAIRS AS NECESSARY TO BRING THE SIGNAL BACK INTO FULL OPERATION WITHIN THE ALLOWED 8-HOUR PERIOD, AND SHALL MAKE PERMANENT REPAIRS OR REPLACEMENT AS SOON THEREAFTER AS POSSIBLE.

NONE OF THE ABOVE SHALL BE CONSTRUED AS COLLECTIVE OR CONSECUTIVE OUTAGE TIME PERIODS AT ANY ONE LOCATION. THAT IS, WHERE MORE THAN ONE OUTAGE OCCURS AT ANY ONE LOCATION THEN THE ALLOTTED TIME LIMIT SHALL BE FOR THE WORST SINGLE OUTAGE.

WHERE OUTAGES ARE THE DIRECT RESULT OF A VEHICLE ACCIDENT, THE RESPONSE OF THE CONTRACTOR SHALL BE AS OUTLINED ABOVE. THE CONTRACTOR SHALL BE RESPONSIBLE FOR COLLECTION OF ANY COMPENSATION FOR THIS WORK FROM THOSE PARTIES RESPONSIBLE FOR THE DAMAGE.

MAINTENANCE OF TRAFFIC SIGNAL/FLASHER INSTALLATION, CONT.
WHERE THE CONTRACTOR HAS FAILED TO, OR CANNOT RESPOND TO, AN OUTAGE OR SIGNAL EQUIPMENT MALFUNCTION, AT THESE LOCATIONS WITHIN HIS RESPONSIBILITY, WITHIN PERIODS AS SPECIFIED ABOVE, THE ENGINEER MAY INVOKE THE PROVISIONS OF SECTION 105.15 AND ANY SUBSEQUENT BILLINGS TO THE STATE OR THE CITY OF CANTON FOR POLICE SERVICES AND MAINTENANCE SERVICES BY CITY FORCES SHALL BE DEDUCTED FROM MONIES DUE OR TO BECOME DUE THE CONTRACTOR IN ACCORDANCE WITH PROVISIONS OF SECTION 105.15.

THE CONTRACTOR SHALL PROVIDE THE MAINTENANCE SERVICE ENTIRELY WITH HIS FORCES OR HE MAY CHOOSE TO ENTER INTO A COOPERATIVE UNDERSTANDING WITH THE LOCAL MAINTAINING AGENCY TO PROVIDE THE MAINTENANCE. THE CONTRACTOR SHALL INFORM THE ENGINEER, IN WRITING, OF THE MAINTENANCE METHOD SELECTED.

THE CONTRACTOR SHALL BE RESPONSIBLE FOR ANY DAMAGE TO ANY TRAFFIC SIGNAL COMPONENTS REQUIRED TO BE HANDLED DURING THE RELOCATION OF POLES AND REVISIONS TO THE SIGNAL SYSTEM.

WHEN A TRAFFIC SIGNAL MUST BE TAKEN OUT OF SERVICE BY THE CONTRACTOR, DUE TO CONSTRUCTION PROCEDURES, THIS OUTAGE SHALL NOT EXCEED FOUR (4) HOURS FOR INSTALLATIONS UTILIZING NEW FOUNDATIONS AND EIGHT (8) HOURS FOR INSTALLATIONS UTILIZING EXISTING FOUNDATIONS AND NO OUTAGE TIME PERIOD SHALL INCLUDE THE HOURS OF 6:00 AM TO 8:00 AM AND 4:00 PM TO 6:00 PM. ANY SIGNALIZED INTERSECTION, WHERE THE SIGNAL IS OUT OF SERVICE DUE TO CONSTRUCTION PROCEDURES, OR DUE TO AN OUTAGE OR MALFUNCTION OF EQUIPMENT AS DESCRIBED ABOVE, SHALL BE PROTECTED, BY THE CONTRACTOR, BY THE INSTALLATION OF TEMPORARY "STOP" SIGNS.

ANY VEHICULAR TRAFFIC SIGNAL HEAD, EITHER NEW OR EXISTING WHICH WILL BE OUT OF OPERATION SHALL BE COVERED IN THE MANNER DESCRIBED IN 632.25.

THE CONTRACTOR SHALL MAINTAIN COMPLETE RECORDS OF MALFUNCTIONS INCLUDING:

1. TIME OF NOTIFICATION OF MALFUNCTION;
2. TIME OF WORK CREWS ARRIVAL TO CORRECT THE MALFUNCTION;
3. ACTIONS TAKEN TO CORRECT THE MALFUNCTION, INCLUDING A LIST OF PARTS REPAIRED OR REPLACED;
4. A DIAGNOSIS OF REASON FOR THE MALFUNCTION AND PROBABILITY OF REOCCURRENCE;
5. TIME OF COMPLETION OF THE REPAIR AND SYSTEM RESTORED TO FULL SERVICE.

A COPY OF THESE RECORDS SHALL BE PROVIDED TO THE ENGINEER WITHIN THREE (3) WORKING DAYS FOLLOWING COMPLETION OF EACH REPAIR.

ALL COSTS RESULTING FROM THE ABOVE REQUIREMENTS SHALL BE CONSIDERED TO BE INCLUDED IN THE LUMP SUM PRICE BID FOR ITEM 614, MAINTAINING TRAFFIC.

SIGN PLACEMENT
THE ELEVATIONS SHOWN IN THE PLANS ARE FOR INFORMATIONAL PURPOSES ONLY. THE EXACT LOCATIONS OF SIGNS ARE TO BE STAKED. THE ENGINEER WILL REVIEW THE LOCATIONS PRIOR TO POST FABRICATION TO INSURE CLEARANCE OF DRIVES, ROADWAYS AND OTHER OBSTACLES. IF THERE ARE ANY CONFLICTS, THEY WILL BE ADJUSTED AS DIRECTED BY THE ENGINEER. UPON ACCEPTANCE OF THE LOCATIONS BY THE ENGINEER AND PRIOR TO POST FABRICATION, THE CONTRACTOR WILL VERIFY THE REQUIRED LENGTH OF THE SIGN POSTS. PAYMENT FOR THIS IS INCIDENTAL TO ALL 630 ITEMS.

SARTA CUSTOM SIGNS
SARTA SHALL PROVIDE SIGNS PERTAINING TO BUS ROUTES AND BUS STOPS. THE LOCATIONS OF ALL SARTA SIGNS SHALL BE COORDINATED WITH XXXXXX XXXXXXXXX OF SARTA, (330) XXX-XXXX PRIOR TO INSTALLATION.

CITY OF CANTON CUSTOM SIGNS
ALL CITY OF CANTON CUSTOM SIGNS SHALL BE REMOVED AND REERECTED OR LEFT IN PLACE AS SHOWN IN THE PLANS. 25 ORNAMENTAL SIGNS FOR STARK PARKS BIKE TRAILS AND 25 MLK CORRIDOR SIGNS SHALL BE PURCHASED FOR USE ALONG WALNUT AVENUE. THESE SIGNS SHALL BE INSTALLED BY THE CITY OF CANTON AFTER THE PROJECT IS COMPLETE.

BIKE BOXES
BIKE BOXES SHALL BE PAINTED IN GREEN ON THE PAVEMENT AT LOCATIONS SHOWN IN THE PLANS. THE MINIMUM DIMENSIONS OF EACH BIKE BOX SHALL BE TEN (10) FEET BY TEN (10) FEET. FOR A TRAPEZOIDAL BIKE BOX, THE MINIMUM LENGTH OF ANY BOUNDARY LINE THAT IS PERPENDICULAR OR PARALLEL TO THE CENTERLINE IS TEN (10) FEET.

ITEM 630 - SIGN, PERMANENT OVERLAY, AS PER PLAN
SIGN S-XXX, SHOWN ON PLAN SHEET XXX, IS TO REMAIN IN PLACE, WITH A PERMANENT OVERLAY TO BE INSTALLED. THE EXISTING SIGN DESIGN IS TO REMAIN, WITH THE WORDS "CHERRY LANE" TO BE REPLACED BY THE WORDS "CHERRY AVENUE". THE NEW WORDS SHALL BE CENTERED HORIZONTALLY ON THE SIGN AND SHALL HAVE THE SAME TEXT HEIGHT AND VERTICAL DISTANCE FROM THE BOTTOM OF THE SIGN. THE NEW WORDS SHALL BE PRINTED IN WHITE. THE SIGN OVERLAY SHALL MEET ALL CURRENT RETROREFLECTIVITY STANDARDS.

CALCULATED HEH
CHECKED WLC

TRAFFIC CONTROL NOTES

WALNUT & CHERRY
COMPLETE STREET
BIKE LANES

CN
3

R:\Stark\SARTA\Task 3 Canton\STA\91592\signals\sheets\91592CN003.dgn 2/2/2012 4:36:43 PM jroth

NOTE:
SEE 50312-B19 - SHT. 2 OF 5
FOR TOP ORIENTATION VIEW

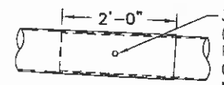

3/4" DIA GALV STUD WITH (2) "ANCO" LOCKNUTS, FACTORY DRILL 1" HOLE IN OUTBOARD TUBE, FIELD DRILL INBOARD TUBE TO ASSURE SNUG FIT.

TELESCOPIC FIELD JOINT FOR 46' ARM ONLY

MATERIAL SPECIFICATIONS
TUBES: CHEM. & PHYSICAL PROP. OF ASTM A595 GR A
PLATE,BAR: ASTM A709 GR 36
ANCHOR BOLTS: ASTM F1554 GR55 TOP END GALV TO A153
ANCHOR BOLT NUTS: ASTM A563 GR A GALV TO A153
MISC. HDWE: (STN STL) AISI 300 SERIES (18-8)
POLE TOP: CAST ALUMINUM-AA319F
TRAFFIC ARM CONN. BOLTS: ASTM-A325
H.H. FRAME: ASTM-A576
H.H. COVER: C1010 STEEL
PEDESTAL BASE: CAST ALUMINUM SPLIT BASE:A319F
STEEL PIPE: ASTM-A53 GR B OR A501
GALV & FINISH PAINT PER SALES ORDER.

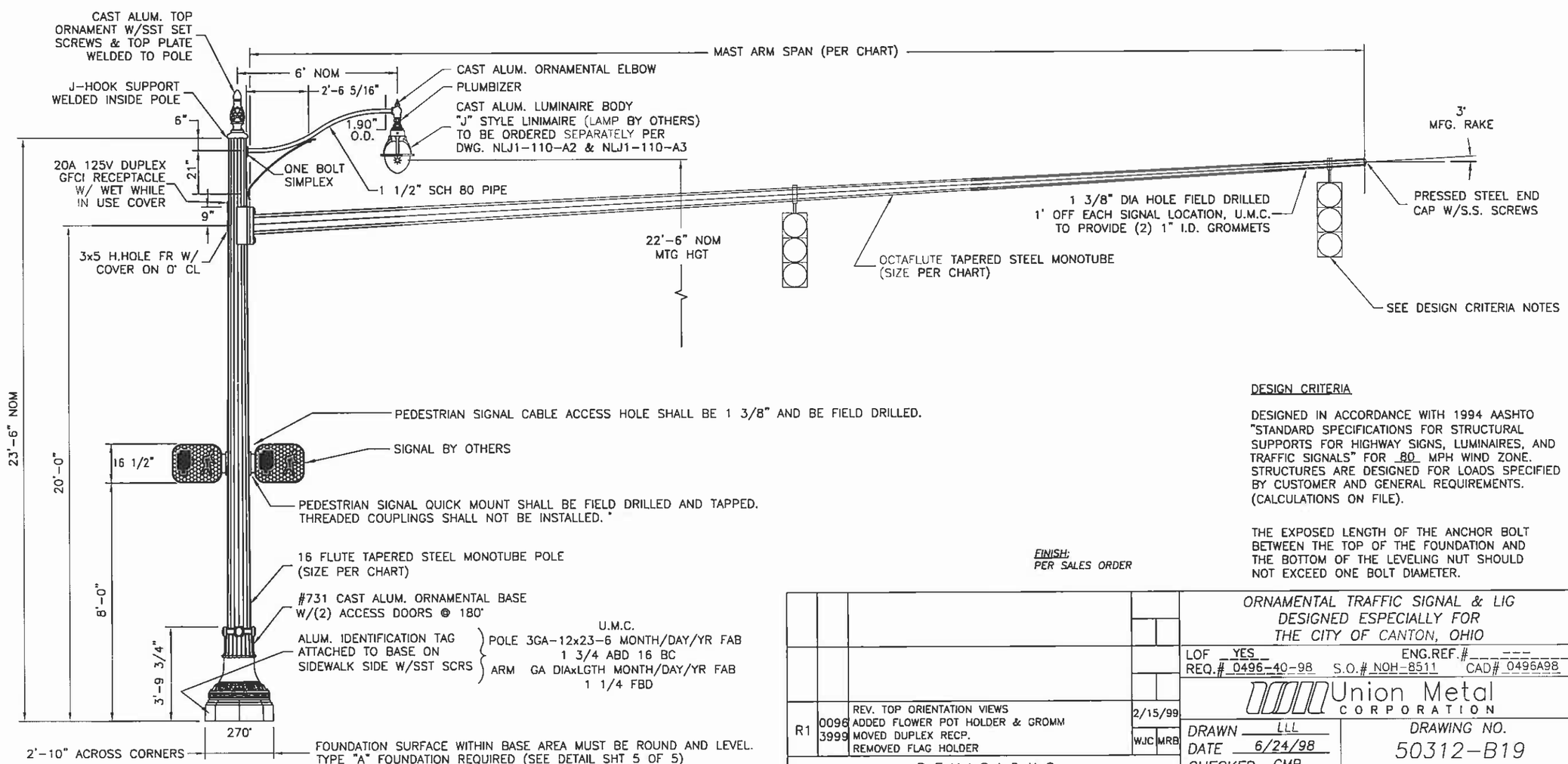

DESIGN CRITERIA

DESIGNED IN ACCORDANCE WITH 1994 AASHTO "STANDARD SPECIFICATIONS FOR STRUCTURAL SUPPORTS FOR HIGHWAY SIGNS, LUMINAIRES, AND TRAFFIC SIGNALS" FOR 80 MPH WIND ZONE. STRUCTURES ARE DESIGNED FOR LOADS SPECIFIED BY CUSTOMER AND GENERAL REQUIREMENTS. (CALCULATIONS ON FILE).

THE EXPOSED LENGTH OF THE ANCHOR BOLT BETWEEN THE TOP OF THE FOUNDATION AND THE BOTTOM OF THE LEVELING NUT SHOULD NOT EXCEED ONE BOLT DIAMETER.

FINISH:
PER SALES ORDER

R1	0096 3999	REV. TOP ORIENTATION VIEWS ADDED FLOWER POT HOLDER & GROMM MOVED DUPLEX RECP. REMOVED FLAG HOLDER	2/15/99	WJC MRB

REVISIONS

ORNAMENTAL TRAFFIC SIGNAL & LIG
DESIGNED ESPECIALLY FOR
THE CITY OF CANTON, OHIO

LOF YES ENG.REF.# ---
REQ.# 0496-40-98 S.O.# NOH-8511 CAD# 0496A98

Union Metal CORPORATION

DRAWN LLL
DATE 6/24/98
CHECKED GMP

DRAWING NO.
50312-B19
SHEET 1 OF 2

NOSTALGIA SIGNAL SUPPORT DETAILS (1 OF 5)

WALNUT & CHERRY COMPLETE STREET BIKE LANES

SCD 1

R:\Stark\SARTA\Task 3 Canton\STA\91592\signals\sheets\Nostalgia Poles.dgn 2/2/2012 4:44:33 PM jroth

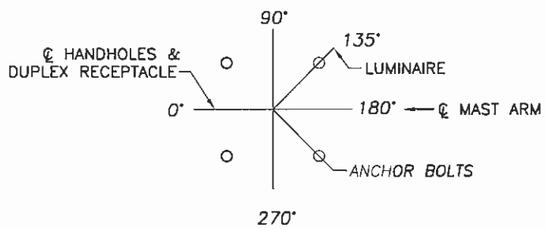

TOP VIEW ORIENTATION
SINGLE MAST ARMPOLES

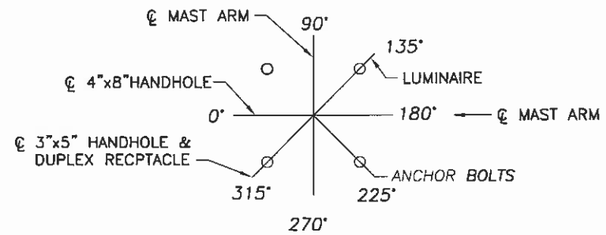

TOP VIEW ORIENTATION
TWIN MAST ARM DESIGNS
50312-Y99 THRU -Y102

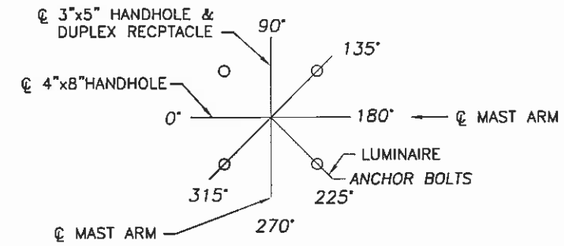

TOP VIEW ORIENTATION
TWIN MAST ARM DESIGN
50312-Y103

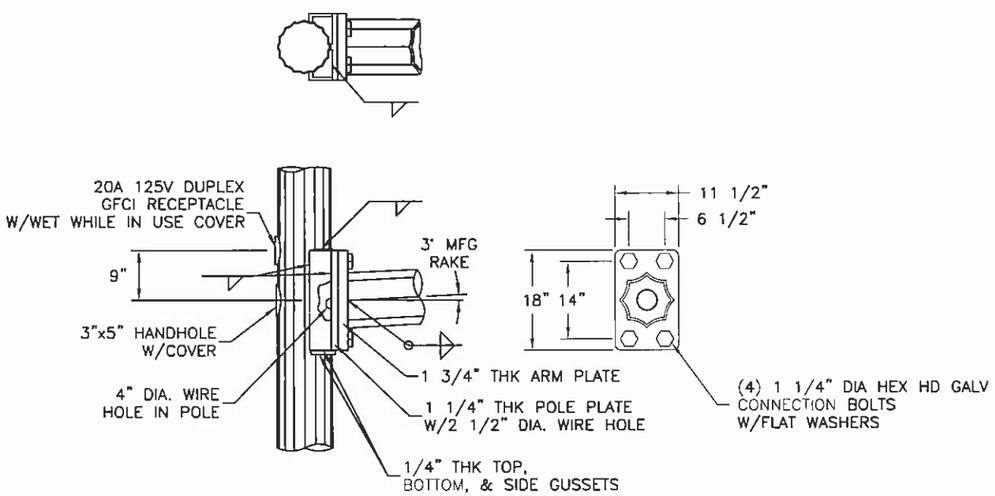

ARM CONNECTION DETAIL
SINGLE ARM CONNECTION SHOWN

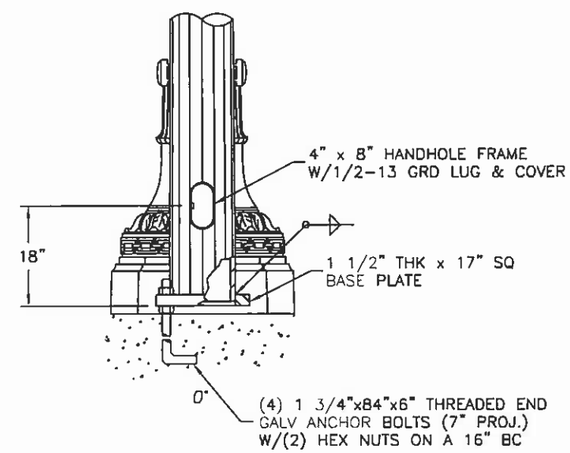

BASE DETAIL

FINISH:
PER SALES ORDER

REVISIONS	ORNAMENTAL TRAFFIC SIGNAL & LIG DESIGNED ESPECIALLY FOR THE CITY OF CANTON, OHIO
	LOF --- ENG.REF.# ---
	REQ.# 0496-40-98 S.O.# NOH-8511 CAD# 0496B98
	Union Metal CORPORATION
	DRAWN LLL
	DATE 6/24/98
	CHECKED GMP
	DRAWING NO. 50312-B19
	SHEET 2 OF 5

NOSTALGIA SIGNAL SUPPORT DETAILS (2 OF 5)

WALNUT & CHERRY
COMPLETE STREET
BIKE LANES

SCD 2

R:\Stark\SARTA\Task 3 Canton\STA\91592\signals\sheets\Nostalgia Poles.dgn 2/2/2012 4:44:46 PM jroth

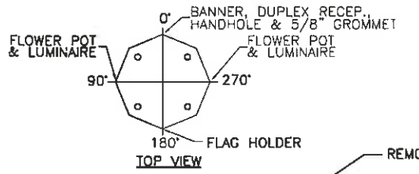

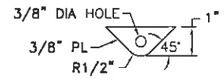

HOLDER FOR FLOWER POT

DESIGN NO.	BANNER ARMS
B2473-54-B14-Y1	NO
B2473-54-B14-Y2	NO

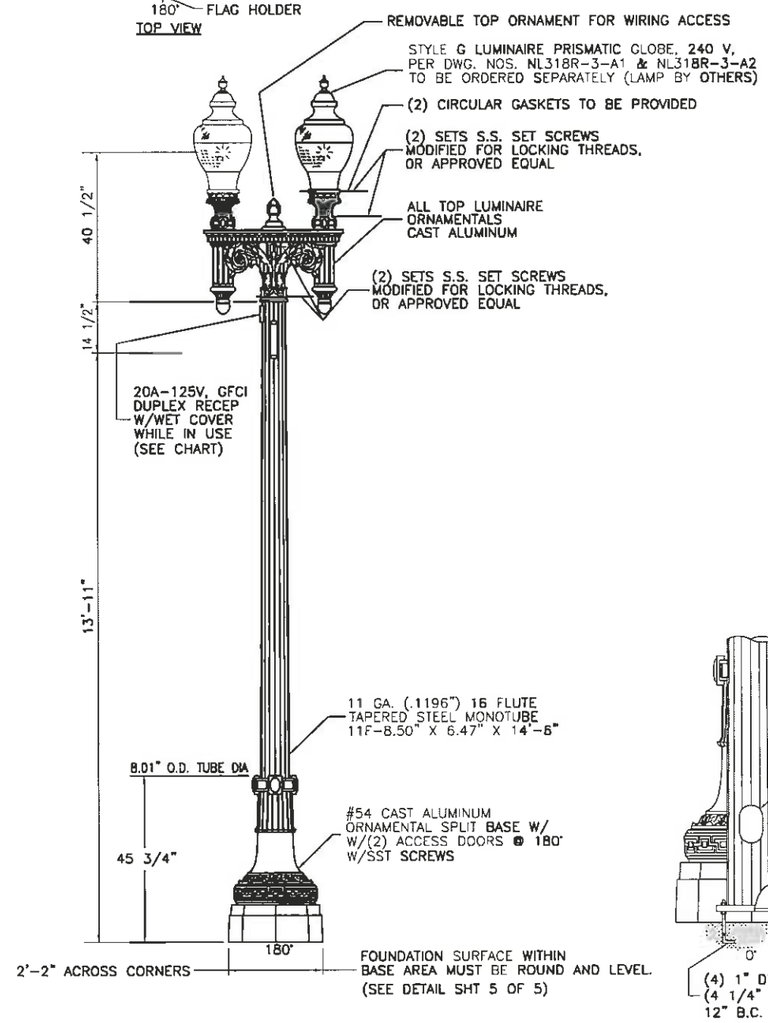

* GFCI 20 A, 125 V DUPLEX RECEPTACLE WITH WET WHITE CLOSED COVER, OPPOSITE SIDE OF POLE AT 180°. INSTALL COVER WITH HINGE AT BOTTOM FOR EASIER ACCESS. ACCESS DOOR ON BASE NOTCHED 1/2" X 3/4" LONG FOR POWER CORD.

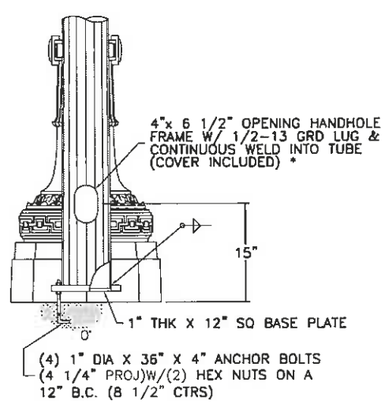

FINISH:
PER SALES ORDER.

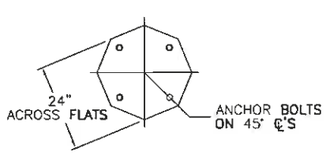

REVISIONS	ORNAMENTAL LIGHTING POLE DESIGNED FOR CANTON, OHIO
	LOF ---- ENG.REF.# ----
	REQ.# 0301-39-98 S.O.# ---- CAD# 0301A98
	Union Metal CORPORATION
	DRAWN LLL DATE 4/28/98 CHECKED GMP
	DRAWING NO. N2473-54-B14

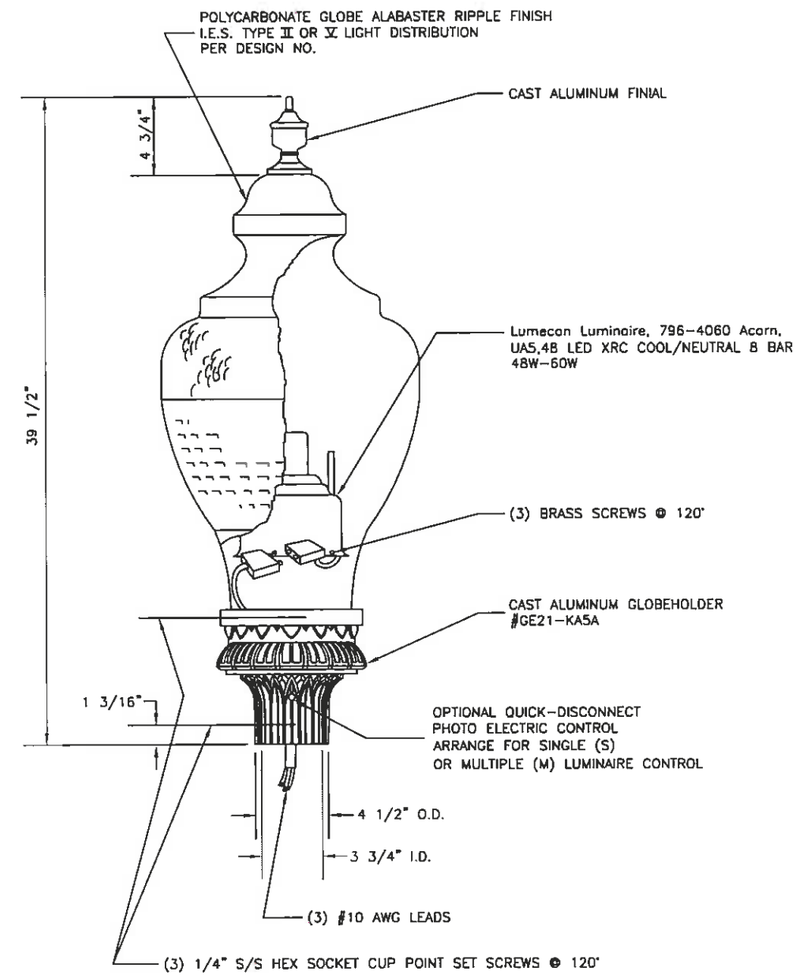

SEE DWG. NL318R-3-A2 FOR DESIGN NO.S AND SPECIFICATION OF ELECTRICAL DATA

NOTE:

GLOBEHOLDER & FINIAL FINISH PAINTED PER SALES ORDER

NOSTALGIA LUMINAIRE NL318R W/STYLE "G3" CAPITAL/GLOBEHOLDER	
UNION METAL CORPORATION	
SCALE ---- DWG. CAS DATE 4-22-96 CHK'D MRB	DRAWING NO. NL318R-3-A1

NOSTALGIA SIGNAL SUPPORT DETAILS (3 OF 5)

WALNUT & CHERRY COMPLETE STREET BIKE LANES

SCD 3

R:\Stark\SARTA\Task 3 Canton\STA\91592\signals\sheets\Nostalgia Poles.dgn 2/2/2012 4:44:56 PM jroth

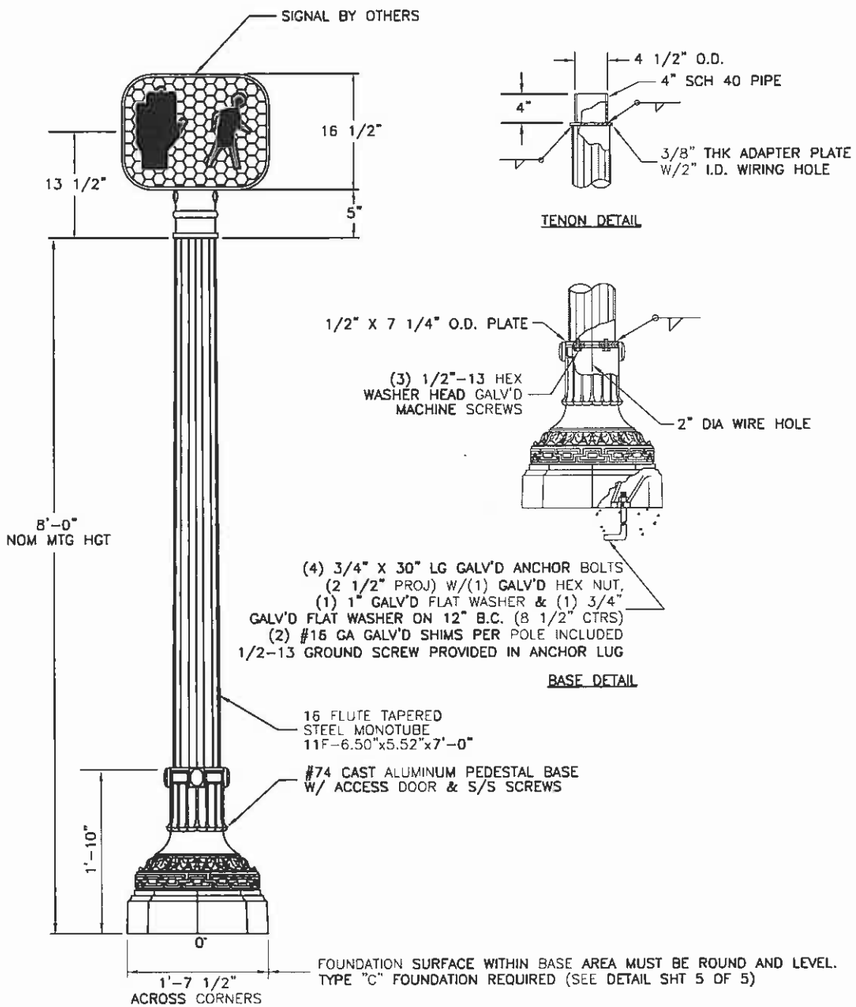

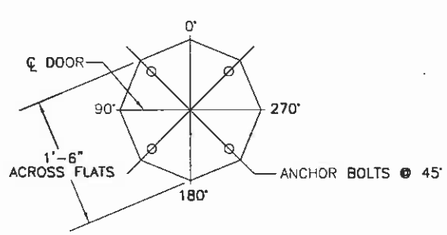

FINISH:
PER SALES ORDER

R1	0096 3999	REV NOM MTG HGT. WAS TO BE SPE ADDED SIGNAL DIM'S	2/15/99 WJC MRB
REVISIONS			

ORNAMENTAL PEDESTRIAN POLE
DESIGNED FOR CANTON, OHIO
U.M.C. DESIGN NO. P2000-74-B9-Y

LOF ---- ENG.REF.# ---
REQ.# 0329-40-98 S.O.# ------ CAD# 0329C9B

Union Metal CORPORATION

DRAWN WJC
DATE 4/24/98
CHECKED GMP

DRAWING NO.
N2000-74-B9

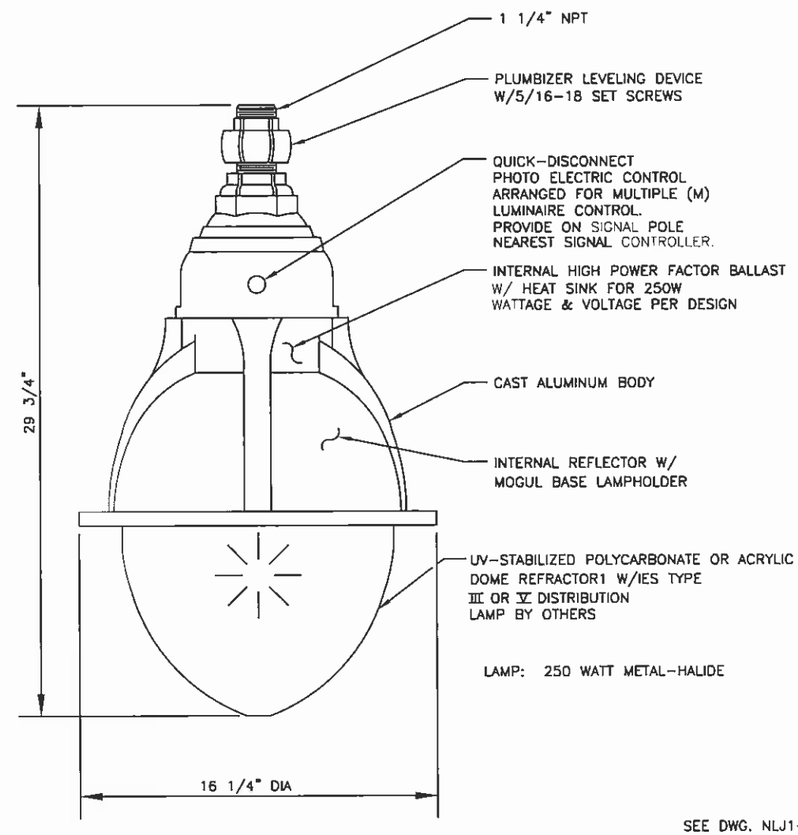

WEIGHT 40 LBS MAX EPA 1.2 SQ FT

SEE DWG. NLJ1-110-A3 FOR
DESIGN NO'S. AND SPECIFICATION
OF ELECTRICAL DATA

"J" STYLE LUMINAIRE W/PLUMBIZER

UNION METAL CORPORATION

SCALE
DWG. CAS
DATE 10-28-94
CHK'D MRB

DRAWING NO.
NLJ1-110-A2

NOSTALGIA SIGNAL SUPPORT DETAILS (4 OF 5)

WALNUT & CHERRY
COMPLETE STREET
BIKE LANES

SCD 4

R:\Stark\SARTA\Task 3 Canton\STA\91592\signals\sheets\Nostalgia Poles.dgn 2/2/2012 4:45:09 PM jroth

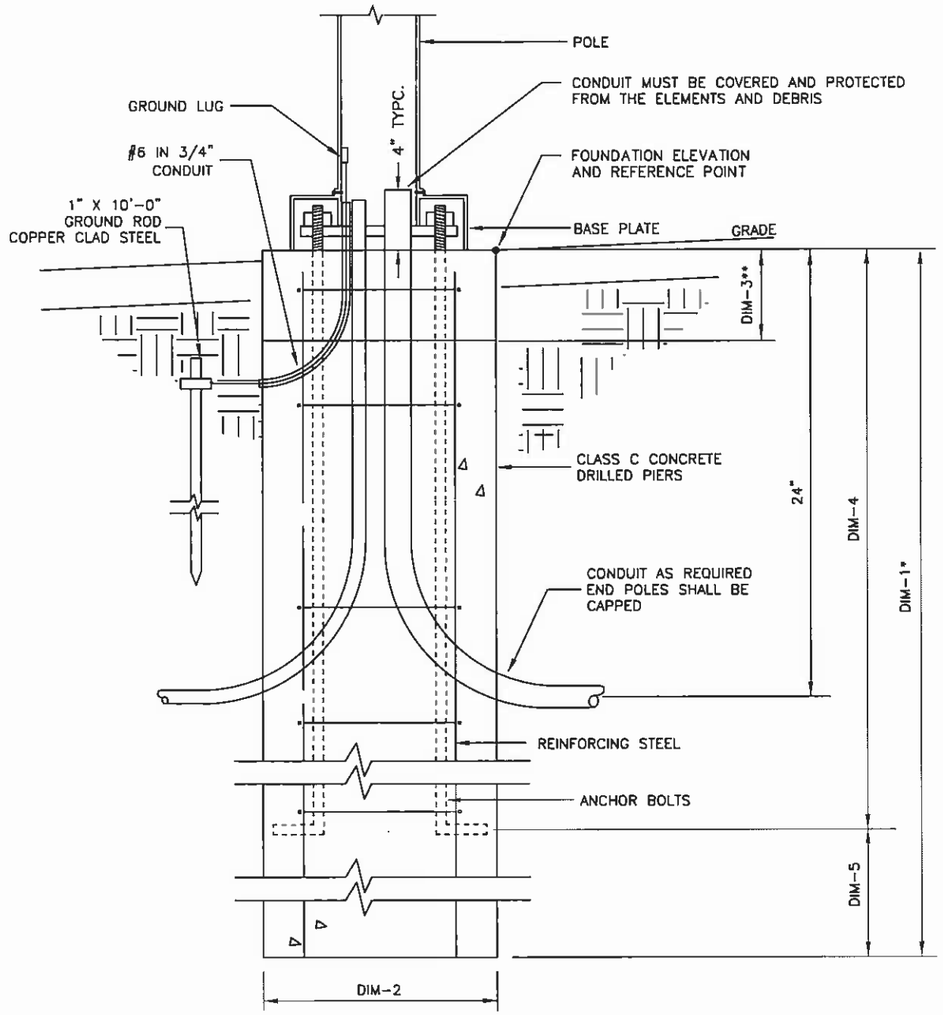

NOSTALGIC FOUNDATION DETAIL

NO SCALE

NOTES:

1. ALL FOUNDATIONS SHALL BE DRILLED PIERS TO AVOID DISTURBING SURROUNDING SOIL. A TEMPORARY STEEL CASING MAY BE REQUIRED. IF UTILITIES OR ANOTHER CONFLICT IS IN CLOSE PROXIMITY TO THE FOUNDATION, THEN THOSE FOUNDATIONS MAY HAVE TO BE EXCAVATED BY HAND.
2. ANCHOR BOLT PATTERN SHALL BE PROVIDED BY POLE MANUFACTURER (U.M.C.).
3. REINFORCING STEEL SHALL BE ASSEMBLED IN CAGES USING #4 TIES.
4. FOUNDATION TOP SHALL BE ROUND AND LEVEL FOR DECORATIVE HOUSING.

* MININUM DEPTH MAY VERY BASED ON SOIL CONDITION.

** ONLY APPLICABLE IN SIDEWALK AREAS.

A. TUBE TO BE PLACED W/TOP AT LEAST 1" ABOVE PROJECTED FINISHED SIDEWALK GRADE.

B. FOUNDATION TO BE POURED TO A MIN. 8" BELOW PROJECT FINISHED SIDEWALK GRADE.

C. ONCE SIDEWALK IS PROVIDED AND/OR FINAL FINISHED GRADE ESTABLISHED, TUBE SHALL BE CUT TO PROPER ELEVATION AND FOUNDATION CAP POURED AND LEVELED WITHIN THE TUBE.

1. CUT AND REMOVE EXPOSED TUBE TO FINISHED GRADE AFTER CONCRETE IS CURED.

FOUNDATION	DIM-1*	DIM-2	DIM-3**	DIM-4	DIM-5
SIGNAL	9'-0"	36"	N/A	84"	24"
LUMINARIES	6'-0"	30"	8"	32"	40"
PEDESTRIAN	4'-0"	24"	8"	30"	18"

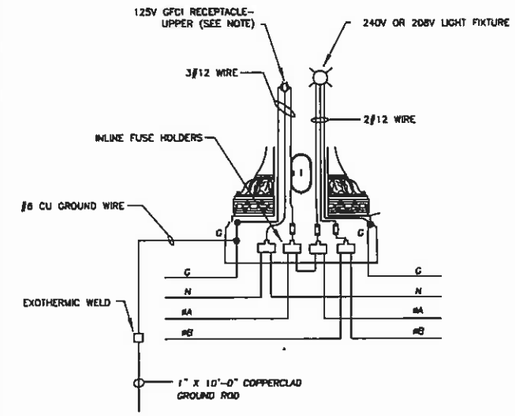

UPPER RECEPTACLE AND POST-TOP LIGHTING

NO SCALE

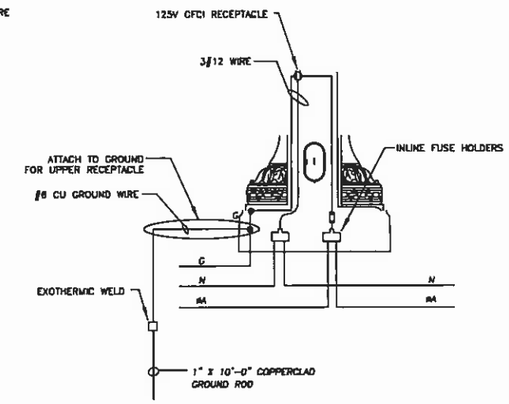

LOWER RECEPTACLE

NO SCALE
(SEE NOTE ON SHEET XX.)

NOTE:

1. THE COST FOR WIRING TO ALL NOSTALGIA LUMINARIES AND RECEPTACLES SHALL BE INCIDENTAL TO THE NOSTALGIA BID ITEMS. ALL WIRING IN POLES AND CONDUITS TO LIGHTS AND RECEPTACLES SHALL BE THE RESPONSIBILITY OF THE CONTRACTOR.

2. ALL WIRING INTO EACH NOSTALGIA POLE BASE SHALL BE NO. 4 AWG WIRE AND CONNECTED TO IN-LINE FUSE HOLDERS. THE COST FOR THIS WIRE SHALL BE INCIDENTAL TO THE NOSTALGIA BID ITEMS.

3. IN-LINE FUSE HOLDERS SHALL BE BUSSMAN (HEB-AW-RYC). INSTALL FUSES IN PHASE LINES AND SOLID LINK IN NEUTRAL (HET-AW-RYC) FOR GROUND USE SPLIT BOLT CONNECTOR. COPPER GROUND CABLE SHALL BE EXOTHERMICALLY WELDED TO THE GROUND ROD. RUN CABLE FREE END THROUGH 3/4" EMT AND CONNECTED AS SHOWN IN THE POLE WIRING DIAGRAM. THE COST FOR THE IN-LINE FUSE HOLDERS AND ALL RELATED ITEMS SHALL BE INCIDENTAL TO THE NOSTALGIA BID ITEMS.

4. THE UPPER POLE RECEPTACLE SHALL BE ALTERNATELY WIRED TO PHASE A AND PHASE B AS SHOWN IN THE POLE WIRING DIAGRAM.

5. FOR LIGHTS, USE 5 AMP FUSES. FOR RECEPTACLES, USE 20 AMP FUSES. AMP RATINGS SHALL BE BASED UPON 75 DEGREE C RATINGS.

6. UNLESS OTHERWISE NOTED IN THESE PLANS, ALL WIRING SHALL BE MINIMUM NO. 12 AWG, COPPER, 600 VOLT RATED WITH THE EXCEPTION OF NO. 14 AWG, COPPER SHALL BE PERMISSIBLE FOR CONTROL CIRCUITRY. THE FOLLOWING SHALL APPLY TO ALL WIRING:

A. ALL WIRING SHALL BE STRANDED "XHHN/XHWN".

B. UNDERGROUND BRANCH CIRCUIT WIRING SHALL BE "XHHW".

NOSTALGIA SIGNAL SUPPORT DETAILS (5 OF 5)

WALNUT & CHERRY
COMPLETE STREET
BIKE LANES

SCD 5

R:\Stark\SARTA\Task 3 Canton\STA\91592\signals\sheets\Nostalgia Poles.dgn 2/2/2012 4:45:19 PM jroth

SHEET NO.	630 GROUND MOUNTED SUPPORT, NO. 3 POST	630 STREET NAME SIGN SUPPORT, NO. 3 POST	630 SIGN HANGER ASSEMBLY, MAST ARM	630 SIGN SUPPORT ASSEMBLY, POLE MOUNTED	630 SIGN, FLAT SHEET	630 SIGN, PERMANENT OVERLAY, AS PER PLAN	630 SIGN, DOUBLE FACED, STREET NAME	630 SIGN, STREET NAME	630 REMOVAL OF GROUND MOUNTED SIGN AND DISPOSAL	630 REMOVAL OF GROUND MOUNTED SIGN AND REERECTION	630 REMOVAL OF GROUND MOUNTED POST SUPPORT AND DISPOSAL	630 REMOVAL OF POLE MOUNTED SIGN AND DISPOSAL	630 REMOVAL OF POLE MOUNTED SIGN AND REERECTION	631 INTERNALLY ILLUMINATED FIXED MESSAGE SIGN, AS PER PLAN
	FT.	FT.	EACH	EACH	SQ. FT.	SQ. FT.	EACH	EACH	EACH	EACH	EACH	EACH	EACH	EACH
57	137.2		4	5	116.3				5	1	2	1		
58	133.0	46.1		6	122.0		4		22	1	14	4		
59	181.2	50.3		2	147.3		3		10		6	4	1	
60	256.4		15	3	237.3			4	19		11	7		
61	65.8			8	55.6				10	1	6	6		
62	66.3	33.5		7	107.5		2		6		3	5		
63	183.9		24	3	153.8			6	17		15	10	1	
64	196.5		22	4	153.5			6	16		14	12		
65	135.0		12	4	122.5			3	5	1	5	4	2	7
66	132.8		16	15	179.9	8.5		3	2		2	20		
67	122.6			7	88.2				10		8	6		
TOTALS CARRIED TO GENERAL SUMMARY	1610.7	129.8	93	64	1483.7	9	9	22	122	4	86	79	4	

SHEET NO.	644 LANE LINE	644 CHANNELIZING LINE	644 STOP LINE	644 CROSSWALK LINE	644 TRANSVERSE/DIAGONAL LINE	644 PARKING LOT STALL MARKING	644 LANE ARROW	644 DOTTED LINE, 4" (WHITE)	644 DOTTED LINE, 4" (YELLOW)	644 BIKE LANE SYMBOL MARKING	644 PAVEMENT MARKING, MISC.: GREEN BIKE BOX	
	MILE	FT.	FT.	FT.	FT.	FT.	EACH	FT.	FT.	EACH	SQ. FT.	
68		4310					2			2		
69	0.82						14			17	207	
70	0.01	20	84	392			14	215	51	11		
71		167		682			6	162	38	16	214	*REF1
72	0.00	73	143		97	168	10	104	38	10	209	
73	0.00	190		710			11	383				
74		311	161	357	162	168					101	
75			125		225	224	10	167		8	214	
76	0.02	579		800			13	187				
77			179		125	280						
TOTALS CARRIED TO GENERAL SUMMARY	0.85	5650	692	2941	609	840	80	1218	127	64	945	

CALCULATED HEH
CHECKED WLC

SIGNING AND PAVEMENT MARKING SUBSUMMARY

WALNUT & CHERRY
COMPLETE STREET
BIKE LANES

TS 1

R:\Stark\SARTA\Task 3 Canton\STA\91592\traffic\sheets\91592TS001.dgn 2/2/2012 5:03:13 PM jrath

SHEET NO.	REFERENCE NO.	LOCATION	STATION	SIDE	CODE	SIZE (INCHES)	630 GROUND MOUNTED SUPPORT, NO. 3 POST	630 SIGN HANGER ASSEMBLY, MAST ARM	630 SIGN SUPPORT ASSEMBLY, POLE MOUNTED	630 SIGN, FLAT SHEET	630 REMOVAL OF GROUND MOUNTED SIGN AND DISPOSAL	630 REMOVAL OF GROUND MOUNTED SIGN AND REERECTION	630 REMOVAL OF GROUND MOUNTED POST SUPPORT AND DISPOSAL	630 REMOVAL OF POLE MOUNTED SIGN AND DISPOSAL
							FT.	EACH	EACH	SQ. FT.	EACH	EACH	EACH	EACH
46	S-1	WALNUT AVENUE	158+20	RT.	R3-17-30	30" X 24"	12.6			5.0				
					R3-17A-30	30" X 12"				2.5				
46	S-2	WALNUT AVENUE	158+56	LT.	W6-3-36	36" X 36"	14.8			9.0				
					W16-9P-24	24" X 12"				2.0				
46	S-3	WALNUT AVENUE	158+56 (ON POLE)	RT.	W6-3-36	36" X 36"	14.8			9.0				
					W16-9P-24	24" X 12"				2.0				
46	S-4	WALNUT AVENUE	159+21 (ON POLE)	LT.	R3-7L-30	30" X 30"	13.0			6.3				
46	S-5	WALNUT AVENUE	(ON MAST ARM FACING EAST)		R6-2L-24	24" X 30"		1		5.0				
					SPECIAL	24" X 18"		1		3.0				
46	S-6	WALNUT AVENUE	(ON MAST ARM FACING WEST)		R6-2R-24	24" X 30"		1		5.0				
					SPECIAL	24" X 18"		1		3.0				
46	S-7	WALNUT AVENUE	160+33 (ON POLE)	LT.	R6-7-24	24" X 30"			1	5.0				
					R6-6-24	24" X 30"			1	5.0				
					R3-17-30	30" X 24"			1	5.0				
					R3-17B-30	30" X 12"			1	2.5				
46	S-8	WALNUT AVENUE	160+45	LT.	SPECIAL	24" X 30"	13.0			5.0				
46	S-9	WALNUT AVENUE	160+45	RT.	R6-7-24	24" X 30"	14.6			5.0				
					SPECIAL	30" X 30"				6.3				
46	S-10	WALNUT AVENUE	160+95	RT.	M3-3-24	24" X 12"	12.6			2.0				
					M1-5-24-2	24" X 24"				4.0				
46	S-11	WALNUT AVENUE	161+09 (ON POLE)	LT.	R7-9-12	12" X 18"			1	1.5				
46	S-12	WALNUT AVENUE	161+09 (ON POLE)	LT.										1
46	S-13	WALNUT AVENUE	161+56	RT.							1	1	1	
46	S-14	WALNUT AVENUE	161+64	RT.	R7-9-12	12" X 18"	12.6			1.5				
46	S-15	WALNUT AVENUE	161+80	LT.	SPECIAL	24" X 30"	16.2			5.0				
					R6-2R-24	24" X 30"				5.0				
					SPECIAL	24" X 18"				3.0				
46	S-16	WALNUT AVENUE	161+81	LT.							4		1	
46	S-17	WALNUT AVENUE	161+96	LT.	SPECIAL	30" X 18"	13.1			3.8				
					SPECIAL	30" X 24"				5.0				
TOTALS CARRIED TO SUB-SUMMARY							137.2	4	5	116.3	5	1	2	1

CALCULATED HEH
CHECKED WLC

SIGNING ESTIMATED QUANTITIES

WALNUT & CHERRY
COMPLETE STREET
BIKE LANES

TQ 1

R:\Stark\SARTA\Task 3 Canton\STA\91592\traffic\sheets\91592TQ001.dgn 2/2/2012 4:55:17 PM jroth

SHEET NO.	REFERENCE NO.	LOCATION	STATION	SIDE	CODE	SIZE (INCHES)	630 GROUND MOUNTED SUPPORT, NO. 3 POST	630 STREET NAME SIGN SUPPORT, NO. 3 POST	630 SIGN SUPPORT ASSEMBLY, POLE MOUNTED	630 SIGN, FLAT SHEET	630 SIGN, DOUBLE FACED, STREET NAME	630 REMOVAL OF GROUND MOUNTED SIGN AND DISPOSAL	630 REMOVAL OF GROUND MOUNTED SIGN AND REERECTION	630 REMOVAL OF GROUND MOUNTED POST SUPPORT AND DISPOSAL	630 REMOVAL OF POLE MOUNTED SIGN AND DISPOSAL
							FT.	FT.	EACH	SQ. FT.	EACH	EACH	EACH	EACH	EACH
47	S-18	WALNUT AVENUE	162+01 (ON POLE)	LT.	R7-9-12	12" X 18"			1	1.5					
47	S-19	WALNUT AVENUE	162+01 (ON POLE)	LT.											2
47	S-20	WALNUT AVENUE	162+05	RT.								4		1	
47	S-21	WALNUT AVENUE	162+05	RT.	D3-1-36	36" X 6"		16.8			1				
					R1-1-30	30" X 30"				6.3					
					R6-2R-24	24" X 30"				5.0					
					SPECIAL	24" X 18"				3.0					
47	S-22	WALNUT AVENUE	162+12	RT.	SPECIAL	24" X 24"	12.5			4.0					
47	S-23	WALNUT AVENUE	162+06	LT.								2		1	
47	S-24	WALNUT AVENUE	163+00	RT.			13.0						1	1	
47	S-25	WALNUT AVENUE	162+52 (ON POLE)	RT.											1
47	S-26	WALNUT AVENUE	162+52 (ON POLE)	RT.	R7-9-12	12" X 18"			1	1.5					
47	S-27	WALNUT AVENUE	162+81	LT.								2		1	
47	S-28	WALNUT AVENUE	163+16 (ON POLE)	LT.	R7-9-12	12" X 18"			1	1.5					
47	S-29	WALNUT AVENUE	164+27 (ON POLE)	LT.	R3-17-30	30" X 24"			1	5.0					
47	S-30	WALNUT AVENUE	164+27	LT.	R3-17-30	30" X 24"	12.5			5.0					
47	S-31	WALNUT AVENUE	164+69	LT.								1		1	
47	S-32	WALNUT AVENUE	165+22 (ON POLE)	LT.											1
47	S-33	WALNUT AVENUE	165+22 (ON POLE)	LT.	R6-2R-24	24" X 30"			1	5.0					
					SPECIAL	24" X 18"			1	3.0					
47	S-34	WALNUT AVENUE	165+32	RT.								1		1	
47	S-35	WALNUT AVENUE	165+32	RT.	D3-1-24	24" X 6"		17.8			1				
					R1-1-30	30" X 30"				6.3					
					R6-2R-24	24" X 30"				5.0					
					SPECIAL	24" X 18"				3.0					
47	S-36	WALNUT AVENUE	165+73	LT.								1		1	
47	S-37	WALNUT AVENUE	165+73	LT.	R7-9-12	12" X 18"	12.0			1.5					
47	S-38	WALNUT AVENUE	165+39	RT.	R7-9-12	12" X 18"	12.0			1.5					
47	S-39	WALNUT AVENUE	165+39	RT.								1		1	
47	S-40	WALNUT AVENUE	165+90	LT.								1		1	
47	S-41	WALNUT AVENUE	165+90	LT.	R5-1-30	30" X 30"	13.6			6.3					
					SPECIAL	24" X 18"				3.0					
47	S-42	WALNUT AVENUE	165+92	RT.	D3-1-24	24" X 6"		11.6			1				
					D3-1-24	24" X 6"					1				
47	S-43	WALNUT AVENUE	165+92	RT.								3		1	
47	S-44	WALNUT AVENUE	166+04	LT.								1		1	
47	S-45	WALNUT AVENUE	166+04	LT.	R1-1-30	30" X 30"	16.2			6.3					
					R6-2L-24	24" X 30"				5.0					
					SPECIAL	24" X 18"				3.0					
					R6-2R-24	24" X 30"				5.0					
					SPECIAL	24" X 18"				3.0					
47	S-46	WALNUT AVENUE	166+35	RT.	R1-1-30	30" X 30"	16.2			6.3					
					R6-2R-24	24" X 30"				5.0					
					R6-2L-24	24" X 30"				5.0					
					SPECIAL	24" X 18"				3.0					
					SPECIAL	24" X 18"				3.0					
47	S-47	WALNUT AVENUE	166+35	RT.								3		1	
47	S-48	WALNUT AVENUE	166+37	LT.								1		1	
47	S-49	WALNUT AVENUE	166+37	LT.	SPECIAL	30" X 24"	13.1			5.0					
					SPECIAL	30" X 18"				3.8					
47	S-50	WALNUT AVENUE	166+91	RT.	R7-9-12	12" X 18"	12.0			1.5					
47	S-51	WALNUT AVENUE	166+91	RT.								1		1	
TOTALS CARRIED TO SUB-SUMMARY							133.0	46.1	6	122.0	4	22	1	14	4

CALCULATED HEH
CHECKED WLC

SIGNING ESTIMATED QUANTITIES

WALNUT & CHERRY
COMPLETE STREET
BIKE LANES

TQ 2

R:\Stark\SARTA\Task 3 Canton\STA\91592\traffic\sheets\91592TQ002.dgn 2/2/2012 4:55:38 PM jroth

SHEET NO.	REFERENCE NO.	LOCATION	STATION	SIDE	CODE	SIZE (INCHES)	630 GROUND MOUNTED SUPPORT, NO. 3 POST (FT.)	630 STREET NAME SIGN SUPPORT, NO. 3 POST (FT.)	630 SIGN SUPPORT ASSEMBLY, POLE MOUNTED (EACH)	630 SIGN, FLAT SHEET (SQ. FT.)	630 SIGN, DOUBLE FACED, STREET NAME (EACH)	630 REMOVAL OF GROUND MOUNTED SIGN AND DISPOSAL (EACH)	630 REMOVAL OF GROUND MOUNTED POST SUPPORT AND DISPOSAL (EACH)	630 REMOVAL OF POLE MOUNTED SIGN AND DISPOSAL (EACH)	630 REMOVAL OF POLE MOUNTED SIGN AND REERECTION (EACH)
48	S-52	WALNUT AVENUE	167+47	LT.	D3-1-24	24" X 6"		16.8			1				
					R1-1-30	30" X 30"				6.3					
					R6-2L-24	24" X 30"				5.0					
					SPECIAL	24" X 18"				3.0					
48	S-53	WALNUT AVENUE	167+64	RT.	R6-2L-24	24" X 30"	13.6			5.0					
					SPECIAL	24" X 18"				3.0					
48	S-54	WALNUT AVENUE	167+64	LT.	SPECIAL	30" X 18"	13.1			3.8					
					SPECIAL	30" X 24"				5.0					
48	S-55	WALNUT AVENUE	167+69 (ON POLE)	LT.	R7-9-12	12" X 18"			1	1.5					
48	S-56	WALNUT AVENUE	167+69 (ON POLE)	LT.										1	
48	S-57	WALNUT AVENUE	168+25	RT.	R3-17-30	30" X 24"	12.5			5.0					
48	S-58	WALNUT AVENUE	168+25	LT.	R3-17-30	30" X 24"	12.5			5.0					
48	S-59	WALNUT AVENUE	168+68	LT.								3	1		
48	S-60	WALNUT AVENUE	168+68	LT.	R1-1-30	30" X 30"	16.2			6.3					
					R6-2R-24	24" X 30"				5.0					
					R6-2L-24	24" X 30"				5.0					
					SPECIAL	24" X 18"				3.0					
					SPECIAL	24" X 18"				3.0					
48	S-61	WALNUT AVENUE	168+80	RT.	D3-1-30	30" X 6"		16.8			1				
					R1-1-30	30" X 30"				6.3					
					R6-2R-24	24" X 30"				5.0					
					R6-2L-24	24" X 30"				5.0					
					SPECIAL	24" X 18"				3.0					
					SPECIAL	24" X 18"				3.0					
48	S-62	WALNUT AVENUE	168+84	LT.	SPECIAL	30" X 18"	13.1			3.8					
					SPECIAL	30" X 24"				5.0					
48	S-63	WALNUT AVENUE	168+86 (ON POLE)	LT.										1	1
48	S-64	WALNUT AVENUE	169+02	LT.	R7-9-12	12" X 18"	12.0			1.5					
48	S-65	WALNUT AVENUE	169+02	LT.								1	1		
48	S-66	WALNUT AVENUE	169+65	RT.	R7-9-12	12" X 18"	12.0			1.5					
48	S-67	WALNUT AVENUE	169+84	LT.	D3-1-24	24" X 6"		16.8			1				
					R1-1-30	30" X 30"				6.3					
					R6-2L-24	24" X 30"				5.0					
					SPECIAL	24" X 18"				3.0					
48	S-68	WALNUT AVENUE	169+85	LT.								3	1		
48	S-69	WALNUT AVENUE	169+93 (ON POLE)	RT.										1	
48	S-70	WALNUT AVENUE	169+93 (ON POLE)	RT.	R2-1-24	24" X 30"			1	5.0					
48	S-71	WALNUT AVENUE	170+00		R6-2L-24	24" X 30"	13.6			5.0					
					SPECIAL	24" X 18"				3.0					
48	S-72	WALNUT AVENUE	170+04	LT.	SPECIAL	30" X 18"	13.1			3.8					
					SPECIAL	30" X 24"				5.0					
48	S-73	WALNUT AVENUE	170+05 (ON POLE)	LT.										1	
48	S-74	WALNUT AVENUE	170+05 (ON POLE)	LT.	R6-2R-24	24" X 30"	13.6			5.0					
					SPECIAL	24" X 18"				3.0					
48	S-75	WALNUT AVENUE	170+47	LT.	R7-9-12	12" X 18"	12.0			1.5					
48	S-76	WALNUT AVENUE	170+47	LT.								1	1		
48	S-77	WALNUT AVENUE	171+82	LT.								1	1		
48	S-78	WALNUT AVENUE	171+82	LT.	R7-9-12	12" X 18"	12.0			1.5					
48	S-79	WALNUT AVENUE	171+93	RT.	R7-9-12	12" X 18"	12.0			1.5					
48	S-80	WALNUT AVENUE	171+94	RT.								1	1		
TOTALS CARRIED TO SUB-SUMMARY							181.2	50.3	2	147.3	3	10	6	4	1

CALCULATED HEH
CHECKED WLC

SIGNING ESTIMATED QUANTITIES

WALNUT & CHERRY
COMPLETE STREET
BIKE LANES

TQ 3

R:\Stark\SARTA\Task 3 Canton\STA\91592\traffic\sheets\91592TQ003.dgn 2/2/2012 4:56:00 PM jroth

SHEET NO.	REFERENCE NO.	LOCATION	STATION	SIDE	CODE	SIZE (INCHES)	630 GROUND MOUNTED SUPPORT, NO. 3 POST (FT.)	630 SIGN HANGER ASSEMBLY, MAST ARM (EACH)	630 SIGN SUPPORT ASSEMBLY, POLE MOUNTED (EACH)	630 SIGN, FLAT SHEET (SQ. FT.)	630 SIGN, STREET NAME (EACH)	630 REMOVAL OF GROUND MOUNTED SIGN AND DISPOSAL (EACH)	630 REMOVAL OF GROUND MOUNTED POST SUPPORT AND DISPOSAL (EACH)	630 REMOVAL OF POLE MOUNTED SIGN AND DISPOSAL (EACH)
49	S-81	WALNUT AVENUE	172+08	LT.								2	1	
49	S-82	WALNUT AVENUE	172+08	LT.	R1-1-30	30" X 30"	15.3			6.3				
					R6-2L-24	24" X 30"				5.0				
					SPECIAL	24" X 18"				3.0				
49	S-83	WALNUT AVENUE	172+27	RT.	R6-2L-24	24" X 30"	13.6			5.0				
					SPECIAL	24" X 18"				3.0				
49	S-84	WALNUT AVENUE	172+27	LT.	SPECIAL	30" X 24"	13.1			5.0				
					SPECIAL	30" X 18"				3.8				
49	S-85	WALNUT AVENUE	172+78	LT.								1	1	
49	S-86	WALNUT AVENUE	172+78	LT.	R7-9-12	12" X 18"	12.0			1.5				
49	S-87	WALNUT AVENUE	172+88 (ON POLE)	RT.	R3-17-30	30" X 24"			1	5.0				
49	S-88	WALNUT AVENUE	173+15 (ON POLE)	LT.	R3-17-30	30" X 24"			1	5.0				
49	S-89	WALNUT AVENUE	173+20	LT.	R1-1-30	30" X 30"	16.2			6.3				
					R6-2L-24	24" X 30"				5.0				
					R6-2R-24	24" X 30"				5.0				
					SPECIAL	24" X 18"				3.0				
					SPECIAL	24" X 18"				3.0				
49	S-90	WALNUT AVENUE	173+22	LT.								3	1	
49	S-91	WALNUT AVENUE	173+55	RT.	R6-2L-24	24" X 30"	13.6			5.0				
					R6-2R-24	24" X 30"				5.0				
					SPECIAL	24" X 18"				3.0				
					SPECIAL	24" X 18"				3.0				
49	S-92	WALNUT AVENUE	173+36	LT.	SPECIAL	30" X 24"	13.1			5.0				
					SPECIAL	30" X 18"				3.8				
49	S-93	WALNUT AVENUE	173+80	LT.								1	1	
49	S-94	WALNUT AVENUE	173+80	LT.	R7-9-12	12" X 18"	12.0			1.5				
49	S-95	WALNUT AVENUE	174+15	RT.								1	1	
49	S-96	WALNUT AVENUE	174+27	LT.								3	1	
49	S-97	WALNUT AVENUE	174+27	LT.	R1-1-30	30" X 30"	16.2			6.3				
					R6-2L-24	24" X 30"				5.0				
					R6-2R-24	24" X 30"				5.0				
					SPECIAL	24" X 18"				3.0				
					SPECIAL	24" X 18"				3.0				
49	S-98	WALNUT AVENUE	174+45	RT.	R6-2L-24	24" X 30"	13.6			5.0				
					SPECIAL	24" X 18"				3.0				
49	S-99	WALNUT AVENUE	174+45	LT.	SPECIAL	30" X 24"	13.1			5.0				
					SPECIAL	30" X 18"				3.8				
49	S-100	WALNUT AVENUE	174+72	RT.	SPECIAL	30" X 30"	13.0			6.3				
49	S-101	WALNUT AVENUE	175+01	LT.	R7-9-12	12" X 18"	12.0			1.5				
49	S-102	WALNUT AVENUE	175+01	LT.								2	1	
49	S-103	WALNUT AVENUE	175+30	LT.	R5-1-30	30" X 30"	13.6			6.3				
					SPECIAL	24" X 18"				3.0				
49	S-104	WALNUT AVENUE	175+30	LT.								1	1	
49	S-105	WALNUT AVENUE	175+26	RT.	R5-1-30	30" X 30"	13.6			6.3				
					SPECIAL	24" X 18"				3.0				
					SPECIAL	24" X 30"				5.0				
49	S-106	WALNUT AVENUE	175+27	RT.								1	1	
49	S-107	WALNUT AVENUE	175+47	LT.	R6-2L-24	24" X 30"	13.6			5.0				
					R6-2R-24	24" X 30"				5.0				
					SPECIAL	24" X 18"				3.0				
					SPECIAL	24" X 18"				3.0				
49	S-108	WALNUT AVENUE	(ON MAST ARM FACING EAST)											2
					D3-1-60	60" X 14"		2			1			
					R6-2L-24	24" X 30"		1		5.0				
					SPECIAL	24" X 18"		1		3.0				
49	S-109	WALNUT AVENUE	175+49	LT.								2	1	
49	S-110	WALNUT AVENUE	(ON MAST ARM FACING WEST)											2
					R6-2R-24	24" X 30"		1		5.0				
					SPECIAL	24" X 18"		1		3.0				
					R10-11-24	24" X 30"		1		5.0				
					D3-1-60	60" X 14"		2			1			
49	S-111	WALNUT AVENUE	176+01	RT.	R6-2L-24	24" X 30"	13.6			5.0				
					R6-2R-24	24" X 30"				5.0				

CALCULATED HEM
CHECKED WLC

SIGNING ESTIMATED QUANTITIES

WALNUT & CHERRY
COMPLETE STREET
BIKE LANES

TQ 4

R:\Stark\SARTA\Task 3 Canton\STA\91592\traffic\sheets\91592T0004.dgn 2/2/2012 4:56:27 PM jroth

SHEET NO.	REFERENCE NO.	LOCATION	STATION	SIDE	CODE	SIZE (INCHES)	630 GROUND MOUNTED SUPPORT, NO. 3 POST (FT.)	630 SIGN SUPPORT ASSEMBLY, POLE MOUNTED (EACH)	630 SIGN, FLAT SHEET (SQ. FT.)	630 REMOVAL OF GROUND MOUNTED SIGN AND DISPOSAL (EACH)	630 REMOVAL OF GROUND MOUNTED SIGN AND REERECTION (EACH)	630 REMOVAL OF GROUND MOUNTED POST SUPPORT AND DISPOSAL (EACH)	630 REMOVAL OF POLE MOUNTED SIGN AND DISPOSAL (EACH)
50	S-118	WALNUT AVENUE	177+62	LT.						2		1	
50	S-119	WALNUT AVENUE	177+79	LT.						2		1	
50	S-120	WALNUT AVENUE	177+75	RT.	M3-3-24	24" X 12"	12.6		2.0				
					M1-5-24-2	24" X 24"			4.0				
50	S-121	WALNUT AVENUE	177+75	RT.						2		1	
50	S-122	WALNUT AVENUE	178+05 (ON POLE)	LT.	SPECIAL	30" X 18"		1	3.8				
					SPECIAL	30" X 24"		1	4.6				
					R7-9-12	12" X 18"		1	1.5				
50	S-123	WALNUT AVENUE	178+05 (ON POLE)	LT.									1
50	S-124	WALNUT AVENUE	178+10	LT.	R6-2R-24	24" X 30"	13.6		5.0				
					SPECIAL	24" X 18"			3.0				
50	S-125	WALNUT AVENUE	178+10	LT.						1		1	
50	S-126	WALNUT AVENUE	178+52 (ON POLE)	RT.									1
50	S-127	WALNUT AVENUE	178+52 (ON POLE)	RT.	R7-9-12	12" X 18"		1	1.5				
50	S-128	WALNUT AVENUE	179+66 (ON POLE)	LT.	R7-9-12	12" X 18"		1	1.5				
					R3-17-30	30" X 24"		1	5.0				
50	S-129	WALNUT AVENUE	179+66 (ON POLE)	LT.									2
50	S-130	WALNUT AVENUE	180+25	RT.	R2-1-24	24" X 30"	14.1		5.0				
					R3-17-30	30" X 24"			5.0				
50	S-131	WALNUT AVENUE	180+95 (ON POLE)	LT.									1
50	S-132	WALNUT AVENUE	180+95 (ON POLE)	LT.	R7-9-12	12" X 18"		1	1.5				
50	S-133	WALNUT AVENUE	181+13	RT.	R7-9-12	12" X 18"	12.0		1.5				
50	S-134	WALNUT AVENUE	181+14	RT.						2		1	
50	S-135	WALNUT AVENUE	181+98 (ON POLE)	LT.									1
50	S-136	WALNUT AVENUE	181+98 (ON POLE)	LT.	R7-9-12	12" X 18"		1	1.5				
50	S-137	WALNUT AVENUE	181+71	RT.	R5-1-30	30" X 30"	13.6		6.3				
					SPECIAL	24" X 18"			3.0				
50	S-138	WALNUT AVENUE	181+72	RT.						1	1	1	
TOTALS CARRIED TO SUB-SUMMARY							65.8	8	55.6	10	1	6	6

CALCULATED HEH
CHECKED WLC

SIGNING ESTIMATED QUANTITIES

WALNUT & CHERRY COMPLETE STREET BIKE LANES

TQ 5

R:\Stark\SARTA\Task 3 Canton\STA\91592\traffic\sheets\91592TQ005.dgn 2/2/2012 4:56:49 PM jroth

SHEET NO.	REFERENCE NO.	LOCATION	STATION	SIDE	CODE	SIZE (INCHES)	630 GROUND MOUNTED SUPPORT, NO. 3 POST FT.	630 STREET NAME SIGN SUPPORT, NO. 3 POST FT.	630 SIGN SUPPORT ASSEMBLY, POLE MOUNTED EACH	630 SIGN, FLAT SHEET SQ. FT.	630 SIGN, DOUBLE FACED, STREET NAME EACH	630 REMOVAL OF GROUND MOUNTED SIGN AND DISPOSAL EACH	630 REMOVAL OF GROUND MOUNTED POST SUPPORT AND DISPOSAL EACH	630 REMOVAL OF POLE MOUNTED SIGN AND DISPOSAL EACH
51	S-139	WALNUT AVENUE	182+02	LT.	D3-1-24	24" X 6"		16.8			1			
					R1-1-30	30" X 30"				6.3				
					R6-2L-24	24" X 30"				5.0				
					R6-2R-24	24" X 30"				5.0				
					SPECIAL	24" X 18"				3.0				
					SPECIAL	24" X 18"				3.0				
51	S-140	WALNUT AVENUE	182+04	LT.								3	1	
51	S-141	WALNUT AVENUE	182+18	LT.								2	1	
51	S-142	WALNUT AVENUE	182+18	LT.	R5-1-30	30" X 30"	15.7			6.3				
					SPECIAL	30" X 24"				5.0				
					SPECIAL	30" X 18"				3.8				
51	S-143	WALNUT AVENUE	182+32	RT.	R6-2L-24	24" X 30"	13.6			5.0				
					R6-2R-24	24" X 30"				5.0				
					SPECIAL	24" X 18"				3.0				
					SPECIAL	24" X 18"				3.0				
51	S-144	WALNUT AVENUE	183+12 (ON POLE)	LT.										2
51	S-145	WALNUT AVENUE	183+12 (ON POLE)	LT.	R7-9-12	12" X 18"			1	1.5				
51	S-146	WALNUT AVENUE	183+12	LT.	D3-1-18	18" X 6"		16.8			1			
					R1-1-30	30" X 30"				6.3				
					R6-2L-24	24" X 30"				5.0				
					R6-2R-24	24" X 30"				5.0				
					SPECIAL	24" X 18"				3.0				
					SPECIAL	24" X 18"				3.0				
51	S-147	WALNUT AVENUE	183+23	RT.	R7-9-12	12" X 18"	12.0			1.5				
51	S-148	WALNUT AVENUE	183+23	RT.								1	1	
51	S-149	WALNUT AVENUE	183+34 (ON POLE)	RT.										1
51	S-150	WALNUT AVENUE	183+34 (ON POLE)	RT	R6-2R-24	24" X 30"			1	5.0				
					R6-2L-24	24" X 30"			1	5.0				
					SPECIAL	24" X 18"			1	3.0				
					SPECIAL	24" X 18"			1	3.0				
51	S-151	WALNUT AVENUE	184+18 (ON POLE)	LT.										1
51	S-152	WALNUT AVENUE	184+18 (ON POLE)	LT.	R7-9-12	12" X 18"			1	1.5				
51	S-153	WALNUT AVENUE	185+33	RT.	R3-17-30	30" X 24"	12.5			5.0				
51	S-154	WALNUT AVENUE	185+32	LT.	R3-17-30	30" X 24"	12.5			5.0				
51	S-155	WALNUT AVENUE	186+08 (ON POLE)	LT.										1
51	S-156	WALNUT AVENUE	186+08 (ON POLE)	LT.	R7-9-12	12" X 18"			1	1.5				
TOTALS CARRIED TO GENERAL SUMMARY							66.3	33.5	7	107.5	2	6	3	5

CALCULATED HEH
CHECKED WLC

SIGNING ESTIMATED QUANTITIES

WALNUT & CHERRY
COMPLETE STREET
BIKE LANES

TQ
6

R:\Stark\SARTA\Task 3 Canton\STA\91592\traffic\sheets\91592TQ006.dgn 2/2/2012 4:57:09 PM jroth

SHEET NO.	REFERENCE NO.	LOCATION	STATION	SIDE	CODE	SIZE (INCHES)	630 GROUND MOUNTED SUPPORT, NO. 3 POST FT.	630 SIGN HANGER ASSEMBLY, MAST ARM EACH	630 SIGN SUPPORT ASSEMBLY, POLE MOUNTED EACH	630 SIGN, FLAT SHEET SQ. FT.	630 SIGN, STREET NAME EACH	630 REMOVAL OF GROUND MOUNTED SIGN AND DISPOSAL EACH	630 REMOVAL OF GROUND MOUNTED POST SUPPORT AND DISPOSAL EACH	630 REMOVAL OF POLE MOUNTED SIGN AND DISPOSAL EACH	630 REMOVAL OF POLE MOUNTED SIGN AND REERECTION EACH
52	S-157	WALNUT AVENUE	187+52 (ON POLE)	RT.											1
52	S-158	WALNUT AVENUE	187+78	LT.	R6-2L-24	24" X 30"	13.6			5.0					
					SPECIAL	24" X 18"				3.0					
52	S-159	WALNUT AVENUE	187+68	RT.	R6-2R-24	24" X 30"	13.0			5.0					
52	S-160	WALNUT AVENUE	187+68	RT.								2	1		
52	S-161	WALNUT AVENUE	(ON MAST ARM FACING EAST)											2	
					R6-2L-24	24" X 30"		1		5.0					
					SPECIAL	24" X 18"		1		3.0					
					R10-11-24	24" X 30"		1		5.0					
					D3-1-60	60" X 14"		2			1				
52	S-162	WALNUT AVENUE	188+30	RT.	R6-2L-24	24" X 30"	13.6			5.0					
					SPECIAL	24" X 18"				3.0					
52	S-163	WALNUT AVENUE	188+32	LT.	R6-2R-24	24" X 30"	13.0			5.0					
52	S-164	WALNUT AVENUE	188+32	LT.								1	1		
52	S-165	WALNUT AVENUE	188+37 (ON POLE)	RT.										2	
52	S-166	WALNUT AVENUE	(ON MAST ARM FACING NORTH)											2	
					D3-1-30	30" X 14"		2			1				
					D3-1-30	30" X 14"		2			1				
					SPECIAL	42" X 30"		1		8.8					
					R10-11-24	24" X 30"		1		5.0					
					R6-2R-24	24" X 30"		1		5.0					
52	S-167	WALNUT AVENUE	188+54	RT.								1	1		
52	S-168	WALNUT AVENUE	188+53	LT.	R7-9-12	12" X 18"	12.0			1.5					
52	S-169	WALNUT AVENUE	188+58	RT.	SPECIAL	24" X 30"	13.0			5.0					
52	S-170	WALNUT AVENUE	188+53	LT.								1	1		
52	S-171	WALNUT AVENUE	189+25	RT.								1	1		
52	S-172	WALNUT AVENUE	188+97	LT.								1	1		
52	S-173	WALNUT AVENUE	189+64	RT.								1	1		
52	S-174	WALNUT AVENUE	188+75	LT.	SPECIAL	24" X 30"	13.0			5.0					
52	S-175	WALNUT AVENUE	189+36 (ON POLE)	LT.	R7-9-12	12" X 18"			1	1.5					
					R3-17-30	30" X 24"			1	5.0					
52	S-176	WALNUT AVENUE	189+46	LT.								1	1		
52	S-177	WALNUT AVENUE	190+05	RT.								1	1		
52	S-178	WALNUT AVENUE	190+09	RT.	SPECIAL	24" X 30"	13.0			5.0					
52	S-179	WALNUT AVENUE	190+15	LT.								1	1		
52	S-180	WALNUT AVENUE	190+45	LT.								1	1		
52	S-181	WALNUT AVENUE	190+46	LT.	R6-2R-24	24" X 30"	13.6			5.0					
					SPECIAL	24" X 18"				3.0					
52	S-182	WALNUT AVENUE	190+24	RT.	R6-2L-24	24" X 30"	14.6			5.0					
					SPECIAL	24" X 30"				5.0					
52	S-183	WALNUT AVENUE	(ON MAST ARM FACING WEST)											2	
					R6-2R-24	24" X 30"		1		5.0					
					SPECIAL	24" X 18"		1		3.0					
					R10-11-24	24" X 30"		1		5.0					
					D3-1-60	60" X 14"		2			1				
52	S-184	WALNUT AVENUE	190+95	LT.								1	1		
52	S-185	WALNUT AVENUE	191+10	RT.								1	1		
52	S-186	WALNUT AVENUE	190+85	RT.	R6-2R-24	24" X 30"	13.6			5.0					
					SPECIAL	24" X 18"				3.0					
52	187	WALNUT AVENUE	191+15	RT.	SPECIAL	24" X 30"	13.0			5.0					
52	S-188	WALNUT AVENUE	190+95 (ON POLE)	LT.	R6-2L-24	24" X 30"			1	5.0					
52	S-189	WALNUT AVENUE	(ON MAST ARM FACING NORTH)	RT.										2	
					R6-2L-24	24" X 30"		1		5.0					
					D3-1-30	30" X 14"		2			1				
					D3-1-30	30" X 14"		2			1				
					SPECIAL	36" X 30"		1		7.5					
					R10-11-24	24" X 30"		1		5.0					
52	S-190	WALNUT AVENUE	191+20	LT.								1	1		
52	S-191	WALNUT AVENUE	191+20	LT.	R7-9-12	12" X 18"	12.0			1.5					
52	S-192	WALNUT AVENUE	191+72	RT.	SPECIAL	24" X 30"	13.0			5.0					
52	S-193	WALNUT AVENUE	191+90	RT.								2	1		
~~TOTALS CARRIED TO SUB SUMMARY~~							~~193.9~~	~~24~~	~~3~~	~~153.8~~	~~8~~	~~17~~	~~15~~	~~10~~	~~1~~

CALCULATED HEH
CHECKED WLC

SIGNING ESTIMATED QUANTITIES

WALNUT & CHERRY COMPLETE STREET BIKE LANES

TQ 7

R:\Stark\SARTA\Task 3 Canton\STA\91592\traffic\sheets\91592TQ007.dgn 2/2/2012 4:57:28 PM jroth

SHEET NO.	REFERENCE NO.	LOCATION	STATION	SIDE	CODE	SIZE (INCHES)	630 GROUND MOUNTED SUPPORT, NO. 3 POST	630 SIGN HANGER ASSEMBLY, MAST ARM	630 SIGN SUPPORT ASSEMBLY, POLE MOUNTED	630 SIGN, FLAT SHEET	630 SIGN, STREET NAME	630 REMOVAL OF GROUND MOUNTED SIGN AND DISPOSAL	630 REMOVAL OF GROUND MOUNTED POST SUPPORT AND DISPOSAL	630 REMOVAL OF POLE MOUNTED SIGN AND DISPOSAL	630
							FT.	EACH	EACH	SQ. FT.	EACH	EACH	EACH	EACH	EACH
53	S-194	WALNUT AVENUE	192+16	RT.								1	1		
52	S-195	WALNUT AVENUE	192+20	RT.	R4-4-36	36" X 30"	13.0			7.5					
53	S-196	WALNUT AVENUE	192+59	LT.								1	1		
53	S-197	WALNUT AVENUE	192+86	RT.	R6-2R-24	24" X 30"	13.0			5.0					
53	S-198	WALNUT AVENUE	192+87	RT.								1	1		
53	S-199	WALNUT AVENUE	192+93 (ON POLE)	LT.										2	
53	S-200	WALNUT AVENUE	193+03	LT.								1	1		
53	S-201	WALNUT AVENUE	193+03	LT.	R6-2L-24	24" X 30"	13.6			5.0					
					SPECIAL	24" X 18"				3.0					
53	S-202	WALNUT AVENUE	(ON MAST ARM FACING EAST)											2	
					D3-1-60	60" X 14"		2			1				
					R6-2L-24	24" X 30"		1		5.0					
					SPECIAL	24" X 18"		1		3.0					
					R10-11-24	24" X 30"		1		5.0					
53	S-203	WALNUT AVENUE	193+48	LT.	R6-2R-24	24" X 30"	13.0			5.0					
53	S-204	WALNUT AVENUE	193+48	LT.								1	1		
53	S-205	WALNUT AVENUE	193+49	RT.	R6-2L-24	24" X 30"	13.6			5.0					
					SPECIAL	24" X 18"				3.0					
53	S-206	WALNUT AVENUE	(ON MAST ARM FACING NORTH)											2	
					D3-1-30	30" X 14"		2			1				
					D3-1-30	30" X 14"		2			1				
					R6-2R-24	24" X 30"		1		5.0					
53	S-207	WALNUT AVENUE	193+87	RT.								1	1		
53	S-208	WALNUT AVENUE	193+77	LT.	R7-9-12	12" X 18"	12.0			1.5					
53	S-209	WALNUT AVENUE	193+77	LT.								1	1		
53	S-210	WALNUT AVENUE	193+98	RT.								2	1		
53	S-211	WALNUT AVENUE	193+99	LT.								2	1		
53	S-212	WALNUT AVENUE	194+31	RT.								1	1		
53	S-213	WALNUT AVENUE	194+10	LT.	SPECIAL	24" X 30"	13.0			5.0					
53	S-214	WALNUT AVENUE	194+55	RT.	M3-3-24	24" X 12"	15.2			2.0					
					M1-5-24-2	24" X 24"				4.0					
					R2-1-24	24" X 30"				5.0					
53	S-215	WALNUT AVENUE	194+53 (ON POLE)	LT.	R3-17-30	30" X 24"			1	5.0					
53	S-216	WALNUT AVENUE	194+53 (ON POLE)	LT.										1	
53	S-217	WALNUT AVENUE	194+74	RT.	SPECIAL	24" X 30"	13.0			5.0					
53	S-218	WALNUT AVENUE	194+85	LT.								1	1		
53	S-219	WALNUT AVENUE	195+32	RT.	SPECIAL	24" X 30"	13.0			5.0					
53	S-220	WALNUT AVENUE	195+31	LT.								1	1		
53	S-221	WALNUT AVENUE	195+31	LT.	R7-9-12	12" X 18"	12.0			1.5					
53	S-222	WALNUT AVENUE	195+57	RT.	SPECIAL	24" X 30"	13.0			5.0					
53	S-223	WALNUT AVENUE	195+63	LT.								1	1		
53	S-224	WALNUT AVENUE	195+64	LT.	R6-2R-24	24" X 30"	13.6			5.0					
					SPECIAL	24" X 18"				3.0					
53	S-225	WALNUT AVENUE	195+55 (ON POLE)	RT.	R6-2L-24	24" X 30"			1	5.0					
53	S-226	WALNUT AVENUE	195+55 (ON POLE)	RT.										1	
53	S-227	WALNUT AVENUE	(ON MAST ARM FACING WEST)											2	
					R6-2R-24	24" X 30"		1		5.0					
					SPECIAL	24" X 18"		1		3.0					
					R10-11-24	24" X 30"		1		5.0					
					D3-1-60	60" X 14"		2			1				
53	S-228	WALNUT AVENUE	196+00	RT.	R6-2R-24	24" X 30"	13.6			5.0					
					SPECIAL	24" X 18"				3.0					
53	S-229	WALNUT AVENUE	196+14 (ON POLE)	LT.	R6-2L-24	24" X 30"			1	5.0					
53	S-230	WALNUT AVENUE	(ON MAST ARM FACING NORTH)											2	
					R6-2L-24	24" X 30"		1		5.0					
					SPECIAL	36" X 30"		1		7.5					
					R10-11-24	24" X 30"		1		5.0					
					D3-1-30	30" X 14"		2			1				
					D3-1-30	30" X 14"		2			1				
53	S-231	WALNUT AVENUE	196+26 (ON POLE)	RT.	SPECIAL	24" X 30"			1	5.0					
53	S-232	WALNUT AVENUE	196+33	LT.	R7-9-12	12" X 18"	12.0			1.5					
53	S-233	WALNUT AVENUE	196+32	LT.								1	1		

CALCULATED HEH
CHECKED WLC

SIGNING ESTIMATED QUANTITIES

WALNUT & CHERRY
COMPLETE STREET
BIKE LANES

TQ
8

R:\Stark\SARTA\Task 3 Canton\STA\91592\traffic\sheets\91592TQ008.dgn 2/2/2012 4:57:49 PM jroth

SHEET NO.	REFERENCE NO.	LOCATION	STATION	SIDE	CODE	SIZE (INCHES)	630 GROUND MOUNTED SUPPORT, NO. 3 POST FT.	630 SIGN HANGER ASSEMBLY, MAST ARM EACH	630 SIGN SUPPORT ASSEMBLY, POLE MOUNTED EACH	630 SIGN, FLAT SHEET SQ. FT.	630 SIGN, STREET NAME EACH	630 REMOVAL OF GROUND MOUNTED SIGN AND DISPOSAL EACH	630 REMOVAL OF GROUND MOUNTED SIGN AND REERECTION EACH	630 REMOVAL OF GROUND MOUNTED POST SUPPORT AND DISPOSAL EACH	630 REMOVAL OF POLE MOUNTED SIGN AND DISPOSAL EACH	630 REMOVAL OF POLE MOUNTED SIGN AND REERECTION EACH	631 INTERNALLY ILLUMINATED FIXED MESSAGE SIGN, AS PER PLAN EACH
54	S-234	WALNUT AVENUE	197+18 (ON POLE)	RT.	SPECIAL	24" X 30"			1	5.0							
54	S-235	WALNUT AVENUE	197+24	RT.	R4-4-36	36" X 30"	13.0			7.5							
54	S-236	WALNUT AVENUE	197+84	LT.								1		1			
54	S-237	WALNUT AVENUE	197+84	LT.	R7-9-12	12" X 18"	12.0			1.5							
54	S-238	WALNUT AVENUE	198+07	RT.	R6-2R-24	24" X 30"	14.1			5.0			1				
54	S-239	WALNUT AVENUE	198+16 (ON POLE)	LT.												2	
54	S-240	WALNUT AVENUE	198+26	LT.								1		1			
54	S-241	WALNUT AVENUE	198+25	LT.	R6-2L-24	24" X 30"	13.6			5.0							
					SPECIAL	24" X 18"				3.0							
54	S-242	WALNUT AVENUE	(ON MAST ARM FACING EAST)												2		
					R6-2L-24	24" X 30"		1		5.0							
					SPECIAL	24" X 18"		1		3.0							
					R10-11-24	24" X 30"		1		5.0							
					D3-1-60	60" X 14"		2			1						
54	S-243	WALNUT AVENUE	198+61	RT.	R6-2L-24	24" X 30"	13.6			5.0							
					SPECIAL	24" X 18"				3.0							
54	S-244	WALNUT AVENUE	198+81 (ON POLE)	LT.	R6-2R-24	24" X 30"			1	5.0							
54	S-245	WALNUT AVENUE	198+85	RT.	SPECIAL	24" X 30"	13.0			5.0							
54	S-246	WALNUT AVENUE	(ON MAST ARM FACING NORTH)												2		
					D3-1-30	30" X 14"		2			1						
					D3-1-30	30" X 14"		2			1						
					R6-2R-24	24" X 30"		1		5.0							
54	S-247	WALNUT AVENUE	198+92	RT.								1		1			
54	S-248	WALNUT AVENUE	198+93	LT.	SPECIAL	24" X 30"	13.0			5.0							
54	S-249	WALNUT AVENUE	199+54	LT.								1		1			
54	S-250	WALNUT AVENUE	199+85 (ON POLE)	LT.	R7-9-12	12" X 18"			1	1.5							
					R3-17-30	30" X 24"			1	5.0							
54	S-251	WALNUT AVENUE	200+41	RT.	SPECIAL	24" X 30"	13.0			5.0							
54	S-252	WALNUT AVENUE	200+47	RT.								1		1			
54	S-253	WALNUT AVENUE	200+89	LT.	R6-2L-24	24" X 30"	13.6			5.0							
					R6-2R-24	24" X 30"				5.0							
					SPECIAL	24" X 18"				3.0							
					SPECIAL	24" X 18"				3.0							
54	S-254	WALNUT AVENUE	(ON MAST ARM FACING EAST)		D3-1-60	60" X 14"											1
					R6-2L-24	24" X 30"											1
					SPECIAL	24" X 18"		1		3.0							
54	S-255	WALNUT AVENUE	(ON MAST ARM FACING WEST)		R3-5L-30	30" x 36"											1
					R6-2R-24	24" X 30"											1
					D3-1-60	60" X 14"											1
					SPECIAL	24" X 18"		1		3.0							
54	S-256	WALNUT AVENUE	(ON MAST ARM FACING NORTH)		D3-1-78	78" X 14"											1
					D3-1-78	78" X 14"											1
54	S-257	WALNUT AVENUE	201+48	RT.	R10-11-24	24" X 30"	16.2			5.0							
					R6-2L-24	24" X 30"				5.0							
					R6-2R-24	24" X 30"				5.0							
					SPECIAL	24" X 18"				3.0							
					SPECIAL	24" X 18"				3.0							
TOTALS CARRIED TO SUB-SUMMARY							135.0	12	4	122.5	3	5	1	5	4	2	7

CALCULATED HEH
CHECKED WLC

SIGNING ESTIMATED QUANTITIES

WALNUT & CHERRY COMPLETE STREET BIKE LANES

TQ 9

R:\Stark\SARTA\Task 3 Canton\STA\91592\traffic\sheets\91592TQ009.dgn 2/2/2012 4:58:09 PM jroth

SHEET NO.	REFERENCE NO.	LOCATION	STATION	SIDE	CODE	SIZE (INCHES)	630 GROUND MOUNTED SUPPORT, NO. 3 POST FT.	630 SIGN HANGER ASSEMBLY, MAST ARM EACH	630 SIGN SUPPORT ASSEMBLY, POLE MOUNTED EACH	630 SIGN, FLAT SHEET SQ. FT.	630 SIGN, PERMANENT OVERLAY, AS PER PLAN SQ. FT.	630 SIGN, STREET NAME EACH	630 REMOVAL OF GROUND MOUNTED SIGN AND DISPOSAL EACH	630 REMOVAL OF GROUND MOUNTED POST SUPPORT AND DISPOSAL EACH	630 REMOVAL OF POLE MOUNTED SIGN AND DISPOSAL EACH
55	S-258	WALNUT AVENUE	203+23 (ON POLE)	RT.	SPECIAL	24" X 30"			1	5.0					
55	S-259	WALNUT AVENUE	203+56	LT.									1	1	
55	S-260	WALNUT AVENUE	203+66	LT.	R6-2L-24	24" X 30"	13.6			5.0					
					SPECIAL	24" X 18"				3.0					
55	S-261	WALNUT AVENUE	(ON MAST ARM FACING EAST)												2
					D3-1-60	60" X 14"		2				1			
					R10-11-24	24" X 30"		1		5.0					
					R6-2L-24	24" X 30"		1		5.0					
					SPECIAL	24" X 18"		1		3.0					
55	S-262	WALNUT AVENUE	204+02	RT.	R6-2L-24	24" X 30"	13.6			5.0					
					SPECIAL	24" X 18"				3.0					
55	S-263	WALNUT AVENUE	(ON MAST ARM FACING NORTH)												2
					D3-1-30	30" X 14"		2				1			
					D3-1-30	30" X 14"		2				1			
					SPECIAL	42" X 30"		1		8.8					
					R10-11-24	24" X 30"		1		5.0					
					R6-2R-24	24" X 30"		1		5.0					
55	S-264	WALNUT AVENUE	204+40	LT.	SPECIAL	24" X 30"	13.0			5.0					
55	S-265	WALNUT AVENUE	204+90 (ON POLE)	RT.	M4-5-24	24" X 12"			1	2.0					
					M4-5-24	24" X 12"			1	2.0					
					M3-3-24	24" X 12"			1	2.0					
					M1-1-24-2	24" X 24"			1	4.0					
					M1-4-24-2	24" X 24"			1	4.0					
					M1-5-24-2	24" X 24"			1	4.0					
					M6-2L-21	21" x 15"			1	2.2					
					SPECIAL	48" X 24"			1	8.0					
					R7-9-12	12" X 18"			1	1.5					
55	S-266	WALNUT AVENUE	204+90 (ON POLE)	RT.											9
55	S-267	WALNUT AVENUE	205+61	LT.							8.5				
55	S-268	WALNUT AVENUE	205+29	RT.	SPECIAL	24" X 30"	13.0			5.0					
55	S-269	WALNUT AVENUE	205+37 (ON POLE)	LT.											1
55	S-270	WALNUT AVENUE	205+37 (ON POLE)	LT.	SPECIAL	36" X 30"			1	7.5					1
55	2-271	WALNUT AVENUE	205+49	RT.	R3-17-30	30" X 24"	12.6			5.0					
					R3-17B-30	30" X 12"				2.5					
55	S-272	WALNUT AVENUE	206+05	LT.	R10-11-24	24" X 30"	13.0			5.0					
55	2-273	WALNUT AVENUE	206+10 (ON POLE)	LT.	R3-17-30	30" X 24"			1	5.0					
					R3-17A-30	30" X 12"			1	2.5					
55	S-274	WALNUT AVENUE	206+16 (ON POLE)	RT.	R6-2L-24	24" X 30"			1	5.0					
55	S-275	WALNUT AVENUE	206+16 (ON POLE)	RT.											1
55	S-276	WALNUT AVENUE	206+25	RT.									1	1	
55	S-277	WALNUT AVENUE	206+15	LT.											1
55	S-278	WALNUT AVENUE	206+22	LT.	R6-2R-24	24" X 30"	13.6			5.0					
					SPECIAL	24" X 18"				3.0					
55	S-279	WALNUT AVENUE	206+26	RT.	R5-1-30	30" X 30"	13.0			6.3					
55	S-280	WALNUT AVENUE	(ON MAST ARM FACING WEST												2
					R6-2R-24	24" X 30"		1		5.0					
					SPECIAL	24" X 18"		1		3.0					
					R10-11-24	24" X 30"		1		5.0					
55	S-281	WALNUT AVENUE	206+70	RT.	R3-17-30	30" X 24"	13.9			5.0					
					R3-17A-30	30" X 12"				2.5					
					M5-1L-21	21" X 15"				2.2					
55	S-282	WALNUT AVENUE	206+73	RT.	R6-2R-24	24" X 30"	13.6			5.0					
					SPECIAL	24" X 18"				3.0					
55	S-283	WALNUT AVENUE	206+84 (ON POLE)	RT.	SPECIAL	24" X 30"			1	5.0					
55	S-284	WALNUT AVENUE	(ON MAST ARM FACING NORTH)												1
					R6-2L-24	24" X 30"		1		5.0					
TOTALS CARRIED TO SUB-SUMMARY							132.8	16	15	179.9	8.5	3	2	2	20

CALCULATED HEH
CHECKED WLC

SIGNING SUBSUMMARY

WALNUT & CHERRY
COMPLETE STREET
BIKE LANES

TQ
10

R:\Stark\SARTA\Task 3 Canton\STA\91592\traffic\sheets\91592TQ010.dgn 2/2/2012 4:58:28 PM jroth

SHEET NO.	REFERENCE NO.	LOCATION	STATION	SIDE	CODE	SIZE (INCHES)	630 GROUND MOUNTED SUPPORT, NO. 3 POST (FT.)	630 SIGN SUPPORT ASSEMBLY, POLE MOUNTED (EACH)	630 SIGN, FLAT SHEET (SQ. FT.)	630 REMOVAL OF GROUND MOUNTED SIGN AND DISPOSAL (EACH)	630 REMOVAL OF GROUND MOUNTED POST SUPPORT AND DISPOSAL (EACH)	630 REMOVAL OF POLE MOUNTED SIGN AND DISPOSAL (EACH)
56	S-285	WALNUT AVENUE	207+00	LT.	R6-6-24	24" X 30"	13.0		5.0			
56	S-286	WALNUT AVENUE	207+00	RT.	R6-6-24	24" X 30"	13.0		5.0			
56	S-287	WALNUT AVENUE	207+11	LT.						1	1	
56	S-288	WALNUT AVENUE	207+45	RT.	R7-1-12	12" X 18"	12.0		1.5			
56	S-289	WALNUT AVENUE	207+23 (ON POLE)	LT.	M4-5-24	24" X 12"		1	2.0			
					M1-1-24-2	24" X 24"		1	4.0			
					M1-4-24	24" X 24"		1	4.0			
					M3-3-24	24" X 12"		1	2.0			
					M1-5-24-2	24" X 24"		1	4.0			
					M6-2L-21	21" X 15"		1	2.2			
56	S-290	WALNUT AVENUE	207+23 (ON POLE)	LT.								6
56	S-291	WALNUT AVENUE	207+20	LT.	R6-2R-24	24" X 30"	14.6		5.0			
					SPECIAL	24" X 30"			5.0			
56	S-292	WALNUT AVENUE	207+20	LT.						1	1	
56	S-293	WALNUT AVENUE	207+98	RT.						1	1	
56	S-294	WALNUT AVENUE	208+00	RT.	W6-3-36	36" X 36"	14.8		9.0			
					W16-9P-24	24" X 12"			2.0			
56	S-295	WALNUT AVENUE	207+80	LT.						1	1	
56	S-296	WALNUT AVENUE	207+81	LT.	R6-2R-24	24" X 30"	13.0		5.0			
56	S-297	WALNUT AVENUE	208+45	LT.	R6-2R-24	24" X 30"	13.0		5.0			
56	S-298	WALNUT AVENUE	208+45	LT.						1	1	
56	S-299	WALNUT AVENUE	208+79	RT.						2	1	
56	S-300	WALNUT AVENUE	208+79	RT.	R5-1-30	30" X 30"	14.6		6.3			
					R6-7-24	24" X 30"			5.0			
56	S-301	WALNUT AVENUE	208+61	LT.						1	1	
56	S-302	WALNUT AVENUE	208+69 (ON POLE)	LT.	SPECIAL	24" X 30"		1	5.0			
56	S-303	WALNUT AVENUE	208+79	LT.						2	1	
56	S-304	WALNUT AVENUE	208+78	LT.	R5-1-30	30" X 30"	14.6		6.3			
					R6-7-24	24" X 30"			5.0			
TOTALS CARRIED TO SUB-SUMMARY							122.6	7	88.2	10	8	6

CALCULATED HEH
CHECKED WLC

SIGNING ESTIMATED QUANTITIES

WALNUT & CHERRY COMPLETE STREET BIKE LANES

TQ 11

R:\Stark\SARTA\Task 3 Canton\STA\91592\traffic\sheets\91592TQ011.dgn 2/2/2012 4:58:58 PM jroth

SHEET NO.	REFERENCE NO.	LOCATION	STATION FROM	STATION TO	SIDE	642 LANE LINE, TYPE 2 MILE	642 CENTER LINE, TYPE 2 MILE	642 CHANNELIZING LINE, TYPE 2 FT	642 STOP LINE, TYPE 2 FT	642 TRANSVERSE/DIAGONAL LINE, TYPE 2 FT	642 LANE ARROW, TYPE 2 EACH	642 BIKE LANE SYMBOL MARKING, TYPE 2 EACH
46A	LL-1	WALNUT AVENUE	160+40	162+00	RT.	160.00						
46A	CL-1	WALNUT AVENUE	160+32	161+75	LT.		143.00					
46A	CL-2	WALNUT AVENUE	160+32	162+00	LT.		168.00					
46A	CH-1	WALNUT AVENUE	160+40	161+89	RT.			149				
46A	SL-1	WALNUT AVENUE	160+30	160+31	LT.				5			
46A	TL-1	WALNUT AVENUE	160+32	161+75	LT.					65		
46A	LA-1	WALNUT AVENUE	160+50		LT.						1	
46A	LA-2	WALNUT AVENUE	160+68		RT.						1	
46A	BS-1	WALNUT AVENUE	160+62		LT.							1
46A	BS-2	WALNUT AVENUE	160+56		RT.							1
						SUBTOTAL 160.00 OR	SUBTOTAL 311.00 OR					
TOTALS CARRIED TO SUB-SUMMARY						0.03	0.06	149	5	65	2	2

CALCULATED HEH
CHECKED WLC

PAVEMENT MARKING SUBSUMMARY

WALNUT & CHERRY COMPLETE STREET BIKE LANES

TQ 12

R:\Stark\SARTA\Task 3 Canton\STA\91592\traffic\sheets\91592TQ012.dgn 2/2/2012 4:59:21 PM jroth

SHEET NO.	REFERENCE NO.	LOCATION	STATION FROM	STATION TO	SIDE	642 LANE LINE, TYPE 2 MILE	642 CENTER LINE, TYPE 2 MILE	642 CHANNELIZING LINE, TYPE 2 FT	642 STOP LINE, TYPE 2 FT	642 CROSSWALK LINE, TYPE 2 FT	642 LANE ARROW, TYPE 2 EACH	642 DOTTED LINE, 4" (WHITE) FT	642 DOTTED LINE, 4" (YELLOW) FT	642 BIKE LANE SYMBOL MARKING, TYPE 2 EACH	642 PAVEMENT MARKING, MISC.: GREEN PAINTED LANE SQ FT
47A	LL-2	WALNUT AVENUE	162+00	167+00	℄	500.00									
47A	CL-3	WALNUT AVENUE	162+00	166+01	LT.		401.00								
47A	CL-4	WALNUT AVENUE	166+35	167+00	LT.		65.00								
47A	CH-2	WALNUT AVENUE	161+99	165+96	RT.			397							
47A	CH-3	WALNUT AVENUE	166+33	167+00	RT.			67							
47A	SL-2	11TH STREET NE	100+30	100+32	LT.				15						
47A	SL-3	11TH STREET NE	99+67	99+68	RT.				13						
47A	CW-1	11TH STREET NE	100+26	100+29	LT./RT.					28					
47A	CW-2	11TH STREET NE	100+20	100+23	LT./RT.					28					
47A	CW-3	11TH STREET NE	99+75	99+78	LT./RT.					27					
47A	CW-4	11TH STREET NE	99+69	99+72	LT./RT.					27					
47A	LA-3	WALNUT AVENUE	162+25		RT.						1				
47A	LA-4	WALNUT AVENUE	163+91		LT.						1				
47A	LA-5	WALNUT AVENUE	164+09		RT.						1				
47A	LA-6	WALNUT AVENUE	165+50		RT.						1				
47A	LA-7	WALNUT AVENUE	165+93		RT.						1				
47A	LA-8	WALNUT AVENUE	165+80		LT.						1				
47A	LA-9	WALNUT AVENUE	166+40		LT.						1				
47A	LA-10	WALNUT AVENUE	166+53		RT.						1				
47A	DL-1	WALNUT AVENUE	161+80	162+80	RT.							100			
47A	DL-2	WALNUT AVENUE	166+01	166+35	LT.							34			
47A	DL-3	WALNUT AVENUE	166+01	166+35	LT.								34		
47A	DL-4	WALNUT AVENUE	165+96	166+33	RT.							37			
47A	DL-5	WALNUT AVENUE	165+96	166+33	RT.							37			
47A	BS-3	WALNUT AVENUE	162+13		RT.									1	
47A	BS-4	WALNUT AVENUE	164+03		LT.									1	
47A	BS-5	WALNUT AVENUE	163+97		RT.									1	
47A	BS-6	WALNUT AVENUE	165+38		RT.									1	
47A	BS-7	WALNUT AVENUE	165+81		RT.									1	
47A	BS-8	WALNUT AVENUE	165+92		LT.									1	
47A	BS-9	WALNUT AVENUE	166+52		LT.									1	
47A	BS-10	WALNUT AVENUE	166+41		RT.									1	
47A	PL-1	WALNUT AVENUE	166+01	166+35	LT.										168
47A	PL-2	WALNUT AVENUE	165+96	166+33	RT.										223
						SUBTOTAL 500.00 OR	SUBTOTAL 466.00 OR								
TOTALS CARRIED TO GENERAL SUMMARY						0.09	0.09	464	28	110	8	208	34	8	391

CALCULATED HEH
CHECKED WLC

PAVEMENT MARKING SUBSUMMARY

WALNUT & CHERRY
COMPLETE STREET
BIKE LANES

TQ
13

R:\Stark\SARTA\Task 3 Canton\STA\91592\traffic\sheets\91592TQ013.dgn 2/2/2012 4:59:44 PM jroth

SHEET NO.	REFERENCE NO.	LOCATION	STATION FROM	STATION TO	SIDE	642 LANE LINE, TYPE 2 MILE	642 CENTER LINE, TYPE 2 MILE	642 CHANNELIZING LINE, TYPE 2 FT	642 LANE ARROW, TYPE 2 EACH	642 BIKE LANE SYMBOL MARKING, TYPE 2 EACH
48A	LL-3	WALNUT AVENUE	167+00	172+00	℄	500				
48A	CL-5	WALNUT AVENUE	167+00	172+00	LT.		500			
48A	CH-4	WALNUT AVENUE	167+00	172+00	RT.			500		
48A	LA-11	WALNUT AVENUE	167+27		LT.				1	
48A	LA-12	WALNUT AVENUE	168+47		LT.				1	
48A	LA-13	WALNUT AVENUE	169+00		RT.				1	
48A	LA-14	WALNUT AVENUE	169+67		LT.				1	
48A	LA-15	WALNUT AVENUE	171+92		LT.				1	
48A	BS-11	WALNUT AVENUE	167+39		LT.					1
48A	BS-12	WALNUT AVENUE	168+59		LT.					1
48A	BS-13	WALNUT AVENUE	168+88		RT.					1
48A	BS-14	WALNUT AVENUE	169+79		LT.					1
48A	BS-16	WALNUT AVENUE	171+98		RT.					1
						SUBTOTAL 500.00 OR	SUBTOTAL 500.00 OR			
TOTALS CARRIED TO SUB-SUMMARY						0.09	0.09	500	5	5

CALCULATED HEH
CHECKED WLC

PAVEMENT MARKING SUBSUMMARY

WALNUT & CHERRY COMPLETE STREET BIKE LANES

TQ 14

R:\Stark\SARTA\Task 3 Canton\STA\91592\traffic\sheets\91592T0014.dgn 2/2/2012 5:00:04 PM jroth

SHEET NO.	REFERENCE NO.	LOCATION	STATION FROM	STATION TO	SIDE	642 LANE LINE, TYPE 2 MILE	642 CENTER LINE, TYPE 2 MILE	642 CHANNELIZING LINE, TYPE 2 FT	642 STOP LINE, TYPE 2 FT	642 CROSSWALK LINE, TYPE 2 FT	642 LANE ARROW, TYPE 2 EACH	642 DOTTED LINE, 4" (WHITE) FT	642 DOTTED LINE, 4" (YELLOW) FT	642 BIKE LANE SYMBOL MARKING, TYPE 2 EACH	642 PAVEMENT MARKING, MISC.: GREEN PAINTED LANE SQ FT	642 PAVEMENT MARKING, MISC.: GREEN BIKE BIX SQ FT
49A	LL-4	WALNUT AVENUE	172+00	175+36	℄	336.00										
49A	LL-5	9TH STREET NE	9+60	9+69	LT.	9.00										
49A	LL-6	WALNUT AVENUE	176+04	177+00	℄	96.00										
49A	CL-6	WALNUT AVENUE	172+00	175+41	LT.		341.00									
49A	CL-7	9TH STREET NE	10+30	10+34	LT.		4.00									
49A	CL-8	9TH STREET NE	9+60	9+68	℄		8.00									
49A	CL-9	WALNUT AVENUE	176+04	177+00	LT.		96.00									
49A	CH-5	WALNUT AVENUE	172+00	174+85	RT.			285								
49A	CH-6	WALNUT AVENUE	176+05	177+00	RT.			95								
49A	SL-4	WALNUT AVENUE	175+33	175+37	LT./RT.				29							
49A	SL-5	9TH STREET NE	10+34	10+34	LT.				24							
49A	SL-6	9TH STREET NE	9+63	9+64	RT.				26							
49A	SL-7	WALNUT AVENUE	176+08	176+08	LT.				6							
49A	CW-5	WALNUT AVENUE	175+37	175+42	LT./RT.					39						
49A	CW-6	WALNUT AVENUE	175+43	175+50	LT./RT.					47						
49A	CW-7	9TH STREET NE	10+30	10+31	LT./RT.					49						
49A	CW-8	9TH STREET NE	10+24	10+25	LT./RT.					51						
49A	CW-9	WALNUT AVENUE	175+98	175+99	LT./RT.					51						
49A	CW-10	WALNUT AVENUE	176+04	176+05	LT./RT.					44						
49A	CW-11	9TH STREET NE	9+73	9+76	LT./RT.					54						
49A	CW-12	9TH STREET NE	9+67	9+70	LT./RT.					54						
49A	LA-16	WALNUT AVENUE	172+10		RT.						1					
49A	LA-17	WALNUT AVENUE	173+00		LT.						1					
49A	LA-18	WALNUT AVENUE	174+10		LT.						1					
49A	LA-19	WALNUT AVENUE	175+15		LT.						1					
49A	LA-20	WALNUT AVENUE	175+50		LT.						1					
49A	LA-21	WALNUT AVENUE	175+28		RT.						1					
49A	LA-22	WALNUT AVENUE	175+97		RT.						1					
49A	LA-23	WALNUT AVENUE	176+25		RT.						1					
49A	LA-24	WALNUT AVENUE	176+13		LT.						1					
49A	DL-6	WALNUT AVENUE	174+85	175+34	RT.							49				
49A	DL-7	WALNUT AVENUE	175+48	175+98	LT.							50				
49A	DL-8	WALNUT AVENUE	175+47	175+98	LT.								51			
49A	DL-9	WALNUT AVENUE	175+46	175+98	RT.							52				
49A	DL-10	WALNUT AVENUE	175+44	175+99	RT.							55				
49A	DL-11	WALNUT AVENUE	175+44	175+89	RT.							45				
49A	DL-12	WALNUT AVENUE	176+05	177+30	RT.							125				
49A	BS-15	WALNUT AVENUE	172+04		LT.									1		
49A	BS-17	WALNUT AVENUE	173+12		LT.									1		
49A	BS-18	WALNUT AVENUE	174+22		LT.									1		
49A	BS-19	WALNUT AVENUE	175+27		LT.									1		
49A	BS-20	WALNUT AVENUE	175+51		LT.									1		
49A	BS-21	WALNUT AVENUE	175+16		RT.									1		
49A	BS-22	WALNUT AVENUE	175+97		RT.									1		
49A	BS-23	WALNUT AVENUE	176+13		RT.									1		
49A	BS-24	WALNUT AVENUE	176+25		LT.									1		
						SUBTOTAL 441.00 OR	SUBTOTAL 449.00 OR									
TOTALS CARRIED TO SUB-SUMMARY						0.08	0.09	380	85	389	9	376	51	9	0	0

CALCULATED HEH
CHECKED WLC

PAVEMENT MARKING SUBSUMMARY

WALNUT & CHERRY
COMPLETE STREET
BIKE LANES

TQ
15

R:\Stark\SARTA\Task 3 Canton\STA\91592\traffic\sheets\91592TQ015.dgn 2/2/2012 5:00:32 PM jroth

SHEET NO.	REFERENCE NO.	LOCATION	STATION FROM	STATION TO	SIDE	644 LANE LINE MILE	644 CHANNELIZING LINE FT.	644 STOP LINE FT.	644 TRANSVERSE/DIAGONAL LINE FT.	644 PARKING LOT STALL MARKING FT.	644 LANE ARROW EACH	644 DOTTED LINE, 4" (WHITE) FT.	644 DOTTED LINE, 4" (YELLOW) FT.	644 BIKE LANE SYMBOL MARKING EACH	644 PAVEMENT MARKING, MISC.: GREEN BIKE BOX SQ. FT.	644 PAVEMENT MARKING, MISC.: GREEN PAINTED LANE SQ. FT.
52	DL-10	WALNUT AVENUE	190+46	190+84	RT.							38				
52	DL-11	WALNUT AVENUE	190+46	190+64	RT.							19				
			190+74	190+84	RT.							9				
52	DL-12	WALNUT AVENUE	190+46	190+84	LT.								38			
52	DL-13	WALNUT AVENUE	190+46	190+84	LT.							38				
52	LA-37	WALNUT AVENUE	187+41		LT.						1					
52	LA-38	WALNUT AVENUE	187+59		RT.						1					
52	LA-39	WALNUT AVENUE	187+93		LT.						1					
52	LA-40	WALNUT AVENUE	188+65		RT.						1					
52	LA-41	WALNUT AVENUE	188+47		LT.						1					
52	LA-42	WALNUT AVENUE	190+18		RT.						1					
52	LA-43	WALNUT AVENUE	190+00		LT.						1					
52	LA-44	WALNUT AVENUE	190+73		RT.						1					
52	LA-45	WALNUT AVENUE	191+02		LT.						1					
52	LA-46	WALNUT AVENUE	191+19		RT.						1					
52	LL-4	6TH STREET	19+35	19+65	RT.	30										
52	LL-5	5TH STREET	29+25	29+74	LT.	49										
52	PL-3	WALNUT AVENUE	187+85	188+22	LT.											193
52	PL-4	WALNUT AVENUE	187+88	188+25	RT.											189
52	PL-5	WALNUT AVENUE	190+46	190+84	LT.											190
52	PL-6	WALNUT AVENUE	190+46	190+84	RT.											190
52	PS-1	WALNUT AVENUE	189+34	189+54	RT.					28						
52	PS-2	WALNUT AVENUE	189+48	189+68	RT.					28						
52	PS-3	WALNUT AVENUE	189+62	189+82	RT.					28						
52	PS-4	WALNUT AVENUE	189+76	189+96	RT.					28						
52	PS-5	WALNUT AVENUE	191+32	191+52	RT.					28						
52	PS-6	WALNUT AVENUE	191+46	191+56	RT.					28						
52	SL-5	WALNUT AVENUE	187+75	187+78	RT./LT.			30								
52	SL-6	WALNUT AVENUE	188+37		LT.			5								
52	SL-7	6TH STREET	20+41		RT./LT.			35								
52	SL-8	WALNUT AVENUE	190+36		RT./LT.			34								
52	SL-9	5TH STREET	29+74		RT./LT.			33								
52	SL-10	WALNUT AVENUE	190+94		LT.			6								
52	TL-1	WALNUT AVENUE	188+98	189+17	RT.				45							
52	TL-2	WALNUT AVENUE	190+90	191+18	RT.				52							
53	BB-5	WALNUT AVENUE	193+15	193+25	LT.										108	
53	BB-6	WALNUT AVENUE	195+85	195+95	RT.										101	
53	BS-47	WALNUT AVENUE	192+65		LT.									1		
53	BS-48	WALNUT AVENUE	192+59		RT.									1		
53	BS-49	WALNUT AVENUE	193+17		LT.									1		
53	BS-50	WALNUT AVENUE	193+70		RT.									1		
53	BS-51	WALNUT AVENUE	193+76		LT.									1		
53	BS-52	WALNUT AVENUE	195+32		RT.									1		
53	BS-53	WALNUT AVENUE	195+38		LT.									1		
53	BS-54	WALNUT AVENUE	195+93		RT.									1		
53	BS-55	WALNUT AVENUE	196+31		LT.									1		
53	BS-56	WALNUT AVENUE	196+25		RT.									1		
53	CH-6	WALNUT AVENUE	192+56	192+93	RT.		37									
53	CH-6A	WALNUT AVENUE	193+53	193+88	RT.		35									
53	CH-7	4TH STREET	40+49	40+50	RT.		1									
TOTALS CARRIED TO SUB-SUMMARY						0.01	73	143	97	168	10	104	38	10	209	762

CALCULATED HEH
CHECKED WLC

PAVEMENT MARKING SUBSUMMARY

WALNUT & CHERRY
COMPLETE STREET
BIKE LANES

TQ 16

R:\Stark\SART\Task 3 Canton\STA\91592\traffic\sheets\91592TQ016.dgn 2/2/2012 5:00:53 PM jroth

SHEET NO.	REFERENCE NO.	LOCATION	STATION FROM	STATION TO	SIDE	644 LANE LINE MILE	644 CHANNELIZING LINE FT.	644 CROSSWALK LINE FT.	644 LANE ARROW EACH	644 DOTTED LINE, 4" (WHITE) FT.	644 DOTTED LINE, 4" (YELLOW FT.	644 PAVEMENT MARKING, MISC.: GREEN PAINTED LANE SQ. FT.
53	CH-7A	WALNUT AVENUE	194+17	194+53	RT.		85					
53	CH-8	3RD STREET	49+40	49+74	RT.		34					
53	CH-8A	WALNUT AVENUE	196+09	196+61	RT.		81					
53	CW-25	WALNUT AVENUE	192+97		LT./RT.			52				
53	CW-26	WALNUT AVENUE	193+05		LT./RT.			58				
53	CW-27	4TH STREET	39+73		LT./RT.			45				
53	CW-28	4TH STREET	39+81		LT./RT.			42				
53	CW-29	WALNUT AVENUE	193+53		LT./RT.			50				
53	CW-30	WALNUT AVENUE	193+47		LT./RT.			54				
53	CW-31	4TH STREET	40+39		LT./RT.			41				
53	CW-32	4TH STREET	40+45		LT./RT.			40				
53	CW-33	WALNUT AVENUE	195+59		LT./RT.			46				
53	CW-34	WALNUT AVENUE	195+65		LT./RT.			46				
53	CW-35	3RD STREET	49+84		LT./RT.			37				
53	CW-36	3RD STREET	49+78		LT./RT.			35				
53	CW-37	WALNUT AVENUE	196+09		LT./RT.			42				
53	CW-38	WALNUT AVENUE	196+03		LT./RT.			46				
53	CW-39	3RD STREET	50+36		LT./RT.			39				
53	CW-40	3RD STREET	50+30		LT./RT.			37				
53	DL-14	WALNUT AVENUE	191+83	192+56	RT.					73		
53	DL-15	WALNUT AVENUE	193+05	193+47	LT.					42		
53	DL-16	WALNUT AVENUE	193+05	193+47	LT.						42	
53	DL-17	WALNUT AVENUE	193+05	193+47	RT.					42		
53	DL-18	WALNUT AVENUE	193+05	193+47	RT.					42		
53	DL-19	WALNUT AVENUE	193+88	194+58	RT.					70		
53	DL-20	WALNUT AVENUE	195+65	196+03	LT.					38		
53	DL-21	WALNUT AVENUE	195+65	196+03	LT.						38	
53	DL-22	WALNUT AVENUE	195+65	196+03	RT.					38		
53	DL-23	WALNUT AVENUE	195+65	196+03	RT.					38		
53	LA-47	WALNUT AVENUE	192+53		LT.				1			
53	LA-48	WALNUT AVENUE	192+71		RT.				1			
53	LA-48A	WALNUT AVENUE	192+61		RT.				1			
53	LA-49	WALNUT AVENUE	193+17		LT.				1			
53	LA-50	WALNUT AVENUE	193+82		RT.				1			
53	LA-51	WALNUT AVENUE	193+64		LT.				1			
53	LA-52	WALNUT AVENUE	195+44		RT.				1			
53	LA-53	WALNUT AVENUE	195+26		LT.				1			
53	LA-54	WALNUT AVENUE	195+94		RT.				1			
53	LA-55	WALNUT AVENUE	196+19		LT.				1			
53	LA-56	WALNUT AVENUE	196+37		RT.				1			
53	LL-6	4TH STREET	39+45	39+73	RT.	28						
53	LL-7	3RD STREET	50+36	50+42	LT.	6						
53	PL-7	WALNUT AVENUE	193+05	193+47	LT.							212
53	PL-8	WALNUT AVENUE	193+05	193+47	RT.							212
53	PL-9	WALNUT AVENUE	195+65	196+03	LT.							187
53	PL-10	WALNUT AVENUE	195+65	196+03	RT.							187
TOTALS CARRIED TO SUB-SUMMARY						0.01	200	710	11	383	80	798

CALCULATED HEH
CHECKED WLC

PAVEMENT MARKING SUBSUMMARY

WALNUT & CHERRY
COMPLETE STREET
BIKE LANES

TQ
17

R:\Stark\SARTA\Task 3 Canton\STA\91592\traffic\sheets\91592TQ017.dgn 2/2/2012 5:01:14 PM jroth

SHEET NO.	REFERENCE NO.	LOCATION	STATION FROM	STATION TO	SIDE	644 CHANNELIZING LINE FT.	644 STOP LINE FT.	644 CROSSWALK LINE FT.	644 TRANSVERSE/DIAGONAL LINE FT.	644 PARKING LOT STALL MARKING FT.	644 REMOVAL OF PAVEMENT MARKING FT.	644 PAVEMENT MARKING, MISC.: GREEN BIKE BOX SQ. FT.
53	PS-7	WALNUT AVENUE	194+68	194+87	RT.					28		
53	PS-8	WALNUT AVENUE	194+82	195+02	RT.					28		
53	PS-9	WALNUT AVENUE	194+96	195+16	RT.					28		
53	PS-10	WALNUT AVENUE	196+60	196+80	RT.					28		
53	PS-11	WALNUT AVENUE	196+74	196+94	RT.					28		
53	PS-12	WALNUT AVENUE	196+89	197+09	RT.					28		
53	SL-11	WALNUT AVENUE	192+93		LT./RT.		42					
53	SL-12	4TH STREET	40+49		LT./RT.		40					
53	SL-13	WALNUT AVENUE	193+57		LT.		6					
53	SL-14	WALNUT AVENUE	195+55		LT./RT.		35					
53	SL-15	3RD STREET	49+74		LT./RT.		31					
53	SL-16	WALNUT AVENUE	196+13		LT.		7					
53	TL-3	WALNUT AVENUE	194+23	194+53	RT.				76			
53	TL-4	WALNUT AVENUE	196+09	196+44	RT.				87			
54	BB-7	WALNUT AVENUE	198+36	198+46	LT.							101
54	BS-57	WALNUT AVENUE	197+86		LT.						1	
54	BS-58	WALNUT AVENUE	197+80		RT.						1	
54	BS-59	WALNUT AVENUE	198+38		LT.						1	
54	BS-60	WALNUT AVENUE	198+88		RT.						1	
54	BS-61	WALNUT AVENUE	198+95		LT.						1	
54	BS-62	WALNUT AVENUE	200+54		RT.						1	
54	BS-63	WALNUT AVENUE	200+60		LT.						1	
54	BS-64	WALNUT AVENUE	201+73		RT.						1	
54	BS-65	WALNUT AVENUE	201+67		LT.						1	
54	CH-8B	WALNUT AVENUE	197+08	197+54	RT.	54						
54	CH-9	WALNUT AVENUE	197+68	198+11	RT.	102						
		WALNUT AVENUE	198+70	198+96	RT.	67						
54	CH-10	2ND STREET NE	60+48	60+55	℄	7						
54	CH-12A	WALNUT AVENUE	201+50	201+91	RT.	81						
54	CW-41	WALNUT AVENUE	198+13	198+20	LT./RT.			50				
54	CW-42	WALNUT AVENUE	198+19	198+27	LT./RT.			58				
54	CW-43	2ND STREET NE	59+69	59+76	LT./RT.			35				
54	CW-44	2ND STREET NE	59+75	59+82	LT./RT.			36				
54	CW-45	WALNUT AVENUE	198+70		LT./RT.			49				
54	CW-46	WALNUT AVENUE	198+64		LT./RT.			56				
54	CW-47	2ND STREET NE	60+44		LT./RT.			36				
54	CW-48	2ND STREET NE	60+38		LT./RT.			37				
TOTALS CARRIED TO SUB-SUMMARY						311	161	357	162	168	9	101

CALCULATED HEH
CHECKED WLC

PAVEMENT MARKING SUBSUMMARY

WALNUT & CHERRY
COMPLETE STREET
BIKE LANES

TQ 18

R:\Stark\SARTA\Task 3 Canton\STA\91592\traffic\sheets\91592TQ018.dgn 2/2/2012 5:01:41 PM jroth

SHEET NO.	REFERENCE NO.	LOCATION	STATION FROM	STATION TO	SIDE	644 CENTER LINE (DOUBLE SOLID) MILE	644 STOP LINE FT.	644 TRANSVERSE/DIAGONAL LINE FT.	644 PARKING LOT STALL MARKING FT.	644 LANE ARROW EACH	644 DOTTED LINE, 4" (WHITE) FT.	644 DOTTED LINE, 4" (YELLOW FT.	644 BIKE LANE SYMBOL MARKING EACH	644 PAVEMENT MARKING, MISC.: GREEN BIKE BOX SQ. FT.	644 PAVEMENT MARKING, MISC.: GREEN PAINTED LANE SQ. FT.
54	DL-24	WALNUT AVENUE	197+24	197+68	RT.						44				
54	DL-25	WALNUT AVENUE	198+26	198+64	RT.						38				
54	DL-26	WALNUT AVENUE	198+25	198+64	RT.							39			
54	DL-27	WALNUT AVENUE	198+22	198+64	RT.						42				
54	DL-28	WALNUT AVENUE	198+21	198+64	RT.						43				
54	LA-57	WALNUT AVENUE	197+74		LT.					1					
54	LA-58	WALNUT AVENUE	197+92		RT.					1					
54	LA-58A	WALNUT AVENUE	197+82		RT.					1					
54	LA-59	WALNUT AVENUE	198+38		LT.					1					
54	LA-60	WALNUT AVENUE	199+00		RT.					1					
54	LA-61	WALNUT AVENUE	198+83		LT.					1					
54	LA-62	WALNUT AVENUE	200+66		RT.					1					
54	LA-63	WALNUT AVENUE	200+48		LT.					1					
54	LA-64	WALNUT AVENUE	201+85		RT.					1					
54	LA-65	WALNUT AVENUE	201+64		LT.					1					
54	LL-8	2ND STREET NE	59+40	59+72	RT.	32									
54	PL-11	WALNUT AVENUE			LT.										193
54	PL-12	WALNUT AVENUE			RT.										215
54	PS-13	WALNUT AVENUE	199+10	199+30	RT.				28						
54	PS-14	WALNUT AVENUE	199+24	199+44	RT.				28						
54	PS-15	WALNUT AVENUE	199+38	199+58	RT.				28						
54	PS-16	WALNUT AVENUE	199+53	199+72	RT.				28						
54	PS-17	WALNUT AVENUE	199+67	199+87	RT.				28						
54	PS-18	WALNUT AVENUE	199+81	200+01	RT.				28						
54	PS-19	WALNUT AVENUE	199+95	200+15	RT.				28						
54	PS-20	WALNUT AVENUE	200+09	200+29	RT.				28						
54	SL-17	WALNUT AVENUE	198+09	198+15	LT./RT.		41								
54	SL-18	2ND STREET NE	60+48		LT./RT.		36								
54	SL-19	WALNUT AVENUE	198+74		LT./RT.		6								
54	SL-20	WALNUT AVENUE	200+76		LT./RT.		37								
54	SL-22	WALNUT AVENUE	201+59		LT./RT.		5								
54	TL-5	WALNUT AVENUE	197+08	197+54	RT.			46							
54	TL-6	WALNUT AVENUE	198+70	198+96	RT.			80							
54	TL-7	WALNUT AVENUE	201+50	201+91	RT.			99							
55	BB-8	WALNUT AVENUE	203+77	203+87	LT.									111	
55	BB-9	WALNUT AVENUE	206+58	206+68	RT.									103	
55	BS-66	WALNUT AVENUE	203+30		RT.								1		
55	BS-67	WALNUT AVENUE	203+37		LT.								1		
55	BS-68	WALNUT AVENUE	203+79		LT.								1		
55	BS-69	WALNUT AVENUE	204+45		LT.								1		
55	BS-70	WALNUT AVENUE	204+38		RT.								1		
55	BS-71	WALNUT AVENUE	205+83		LT.								1		
55	BS-72	WALNUT AVENUE	205+80		RT.								1		
55	BS-73	WALNUT AVENUE	206+66		RT.								1		
TOTALS CARRIED TO SUB-SUMMARY						0.01	125	225	224	10	167	39	8	214	408

CALCULATED HEH
CHECKED WLC

PAVEMENT MARKING SUBSUMMARY

WALNUT & CHERRY
COMPLETE STREET
BIKE LANES

TQ 19

R:\Stark\SARTA\Task 3 Canton\STA\91592\traffic\sheets\91592TQ019.dgn 2/2/2012 5:02:01 PM jroth

SHEET NO.	REFERENCE NO.	LOCATION	STATION FROM	STATION TO	SIDE	644 LANE LINE MILE	644 CHANNELIZING LINE FT.	644 CROSSWALK LINE FT.	644 LANE ARROW EACH	644 DOTTED LINE, 4" (WHITE) FT.	644 DOTTED LINE, 4" (YELLOW FT.	644 PAVEMENT MARKING, MISC.: GREEN PAINTED LANE SQ. FT.
55	CH-13	2ND STREET SE	80+47	80+55	LT.		8					
55	CH-14	WALNUT AVENUE	204+80	206+13	LT.		136					
55	CH-15	WALNUT AVENUE	205+16	206+13	LT./RT.		100					
55	CH-16	WALNUT AVENUE	204+80	206+13	RT.		133					
55	CH-17	WALNUT AVENUE	204+13	206+13	RT.		200					
55	CH-18	3RD STREET SE	89+55	89+57	LT.		2					
55	CW-49	WALNUT AVENUE	203+59	203+61	LT./RT.			37				
55	CW-50	WALNUT AVENUE	203+65	203+67	LT./RT.			47				
55	CW-51	2ND STREET SE	79+63	79+67	LT./RT.			40				
55	CW-52	2ND STREET SE	79+69	79+73	LT./RT.			39				
55	CW-53	WALNUT AVENUE	204+13		LT./RT.			55				
55	CW-54	WALNUT AVENUE	204+07		LT./RT.			62				
55	CW-55	2ND STREET SE	80+43		LT./RT.			36				
55	CW-56	2ND STREET SE	80+37		LT./RT.			39				
55	CW-57	WALNUT AVENUE	206+17		LT./RT.			74				
55	CW-58	WALNUT AVENUE	206+23		LT./RT.			82				
55	CW-59	3RD STREET SE	89+61		LT./RT.			40				
55	CW-60	3RD STREET SE	89+67		LT./RT.			41				
55	CW-61	WALNUT AVENUE	206+80	206+88	LT./RT.			16				
55	CW-62	WALNUT AVENUE	206+87	206+93	LT./RT.			20				
55	CW-63	WALNUT AVENUE	206+74	206+95	LT./RT.			39				
55	CW-64	WALNUT AVENUE	206+67	206+91	LT./RT.			42				
55	CW-65	3RD STREET SE	90+59	90+69	LT./RT.			44				
55	CW-66	3RD STREET SE	90+53	90+63	LT./RT.			45				
55	DL-6	WALNUT AVENUE	203+66	204+07	LT.					21		
55	DL-7	WALNUT AVENUE	203+66	204+07	LT.						42	
55	DL-8	WALNUT AVENUE	203+65	204+07	RT.					45		
55	DL-9	WALNUT AVENUE	203+65	204+07	RT.					45		
55	DL-10	WALNUT AVENUE	206+23	206+58	RT.					38		
55	DL-11	WALNUT AVENUE	206+23	206+58	RT.					38		
55	LA-66	WALNUT AVENUE	203+42		RT.				1			
55	LA-67	WALNUT AVENUE	203+25		LT.				1			
55	LA-68	WALNUT AVENUE	203+79		LT.				1			
55	LA-69	WALNUT AVENUE	204+33		LT.				1			
55	LA-70	WALNUT AVENUE	204+50		RT.				1			
55	LA-70A	WALNUT AVENUE	205+13						1			
55	LA-70B	WALNUT AVENUE	205+13						1			
55	LA-70C	WALNUT AVENUE	205+12						1			
55	LA-71	WALNUT AVENUE	205+71		LT.				1			
55	LA-72	WALNUT AVENUE	205+80		RT.				1			
55	LA-73	WALNUT AVENUE	206+66		RT.				1			
55	LA-74	WALNUT AVENUE	205+71		RT.				1			
55	LA-75	WALNUT AVENUE	205+69		LT.				1			
55	LL-9	2ND STREET SE	79+54	79+67	LT.	13						
55	LL-9A	WALNUT AVENUE	204+13	204+80	LT.	67						
55	LL-10	3RD STREET SE	90+64	90+86	LT.	22						
55	PL-13	WALNUT AVENUE	203+66	204+07	LT.							209
55	PL-14	WALNUT AVENUE	203+65	204+07	RT.							224
55	PL-15	WALNUT AVENUE	206+23	206+58	RT.							188
TOTALS CARRIED TO SUB-SUMMARY						0.02	579	798	13	187	42	621

CALCULATED HEH
CHECKED WLC

PAVEMENT MARKING SUBSUMMARY

WALNUT & CHERRY
COMPLETE STREET
BIKE LANES

TQ 20

R:\Stark\SAFTA\Task 3 Canton\STA\91592\traffic\sheets\91592TQ020.dgn 2/2/2012 5:02:22 PM jroth

SHEET NO.	REFERENCE NO.	LOCATION	STATION FROM	STATION TO	SIDE	STOP LINE (644) FT.	TRANSVERSE/DIAGONAL LINE (644) FT.	PARKING LOT STALL MARKING (644) FT.	DOTTED LINE, 4" (644) FT.
55	PS-21	WALNUT AVENUE	202+05	202+25	RT.				28
55	PS-22	WALNUT AVENUE	202+19	202+39	RT.				28
55	PS-23	WALNUT AVENUE	202+33	202+53	RT.				28
55	PS-24	WALNUT AVENUE	202+47	202+67	RT.				28
55	PS-25	WALNUT AVENUE	202+61	202+81	RT.				28
55	PS-26	WALNUT AVENUE	202+75	202+95	RT.				28
55	PS-27	WALNUT AVENUE	202+90	203+09	RT.				28
55	PS-28	WALNUT AVENUE	203+04	203+24	RT.				28
55	SL-24	WALNUT AVENUE	203+55	203+56	LT./RT.	30			
55	SL-25	WALNUT AVENUE	204+17		LT.	9			
55	SL-26	2ND STREET SE	80+47		LT.	36			
55	SL-27	WALNUT AVENUE	206+13		LT./RT.	64			
55	SL-28	3RD STREET SE	89+57		LT./RT.	40			
55	TL-8	WALNUT AVENUE	205+35	205+36	RT.		1		
			205+48	205+49	RT.		3		
			205+60	205+62	RT.		7		
			205+73	205+76	RT.		11		
			205+86	205+91	LT./RT.		17		
			205+99	206+07	LT./RT.		25		
56	PS-29	WALNUT AVENUE	207+16	207+35	LT.			28	
56	PS-30	WALNUT AVENUE	207+30	207+49	LT.			28	
56	PS-31	WALNUT AVENUE	207+44	207+64	LT.			28	
56	PS-32	WALNUT AVENUE	207+58	207+78	LT.			28	
56	PS-33	WALNUT AVENUE	207+72	207+92	LT.			28	
56	PS-34	WALNUT AVENUE	207+86	208+06	LT.			28	
56	PS-35	WALNUT AVENUE	208+00	208+20	LT.			28	
56	PS-36	WALNUT AVENUE	208+15	208+34	LT.			28	
56	PS-37	WALNUT AVENUE	208+29	208+48	LT.			28	
56	PS-38	WALNUT AVENUE	208+43	208+63	LT.			28	
56	TL-9	WALNUT AVENUE	207+07	207+35	LT.		61		
TOTALS CARRIED TO SUB-SUMMARY						179	125	280	224

CALCULATED HEH
CHECKED WLC

PAVEMENT MARKING SUBSUMMARY

WALNUT & CHERRY
COMPLETE STREET
BIKE LANES

TQ 21

R:\Stark\SARTA\Task 3 Canton\STA\91592\traffic\sheets\91592TQ021.dgn 2/2/2012 5:02:41 PM jroth

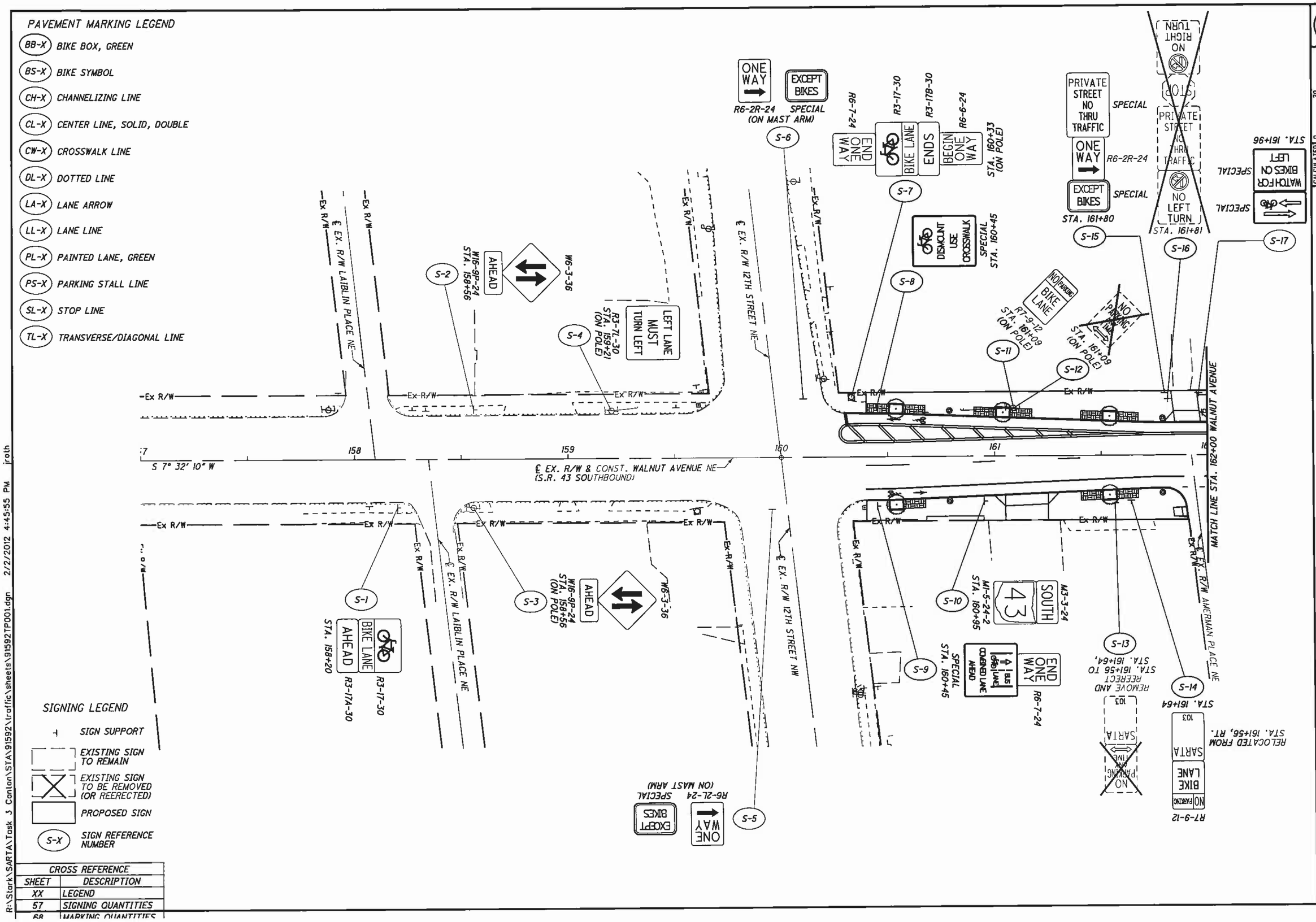
PAVEMENT MARKING LEGEND
BB-X BIKE BOX, GREEN
BS-X BIKE SYMBOL
CH-X CHANNELIZING LINE
CL-X CENTER LINE, SOLID, DOUBLE
CW-X CROSSWALK LINE
DL-X DOTTED LINE
LA-X LANE ARROW
LL-X LANE LINE
PL-X PAINTED LANE, GREEN
PS-X PARKING STALL LINE
SL-X STOP LINE
TL-X TRANSVERSE/DIAGONAL LINE
SIGNING LEGEND
SIGN SUPPORT
EXISTING SIGN TO REMAIN
EXISTING SIGN TO BE REMOVED (OR REERECTED)
PROPOSED SIGN
S-X SIGN REFERENCE NUMBER
CROSS REFERENCE
SHEET DESCRIPTION
XX LEGEND
57 SIGNING QUANTITIES
68 MARKING QUANTITIES
S 7° 32' 10" W
℄ EX. R/W & CONST. WALNUT AVENUE NE (S.R. 43 SOUTHBOUND)
℄ EX. R/W LAIBLIN PLACE NE
℄ EX. R/W 12TH STREET NE
℄ EX. R/W 12TH STREET NW
EX. R/W AMERMAN PLACE NE
MATCH LINE STA. 162+00 WALNUT AVENUE
Ex R/W
158
159
160
161
S-1 R3-17-30 R3-17A-30 BIKE LANE AHEAD STA. 158+20
S-2 W16-9P-24 AHEAD STA. 158+56
S-3 W16-9P-24 AHEAD STA. 158+56 (ON POLE) W6-3-36
S-4 R3-71-30 STA. 159+21 (ON POLE) LEFT LANE MUST TURN LEFT
S-5 R6-2R-24 ONE WAY R6-2L-24 SPECIAL EXCEPT BIKES (ON MAST ARM)
S-6 R6-2R-24 ONE WAY SPECIAL EXCEPT BIKES (ON MAST ARM)
S-7 R6-7-24 END ONE WAY R3-17-30 BIKE LANE R3-17B-30 ENDS R6-6-24 BEGIN ONE WAY STA. 160+33 (ON POLE)
S-8 DISMOUNT USE CROSSWALK SPECIAL STA. 160+45
S-9 END ONE WAY R6-7-24 SPECIAL STA. 160+45 BUS BIKE LANE CONGNED LANE AHEAD
S-10 M1-5-24-2 STA. 160+95 SOUTH 43 M3-3-24
S-11 R7-9-12 NO PARKING BIKE LANE STA. 161+09 (ON POLE)
S-12 NO PARKING STA. 161+09 (ON POLE)
S-13 REMOVE AND REERECT STA. 161+56 TO STA. 161+64, NO PARKING ANY TIME SARTA 103
S-14 STA. 161+64 R7-9-12 NO PARKING BIKE LANE SARTA 103 RELOCATED FROM STA. 161+56, RT.
S-15 PRIVATE STREET NO THRU TRAFFIC SPECIAL ONE WAY R6-2R-24 EXCEPT BIKES SPECIAL STA. 161+80
S-16 NO RIGHT TURN STOP PRIVATE STREET NO THRU TRAFFIC NO LEFT TURN STA. 161+81
S-17 STA. 161+96 WATCH FOR BIKES ON LEFT SPECIAL SPECIAL
HORIZONTAL SCALE IN FEET 0 10 20 40
CALCULATED HEH
CHECKED WLC
SIGNING PLAN - WALNUT AVENUE
STA. 157+00 TO STA. 162+00
WALNUT & CHERRY COMPLETE STREET BIKE LANES
TP 1
R:\Stark\SARTA\Task 3 Canton\STA\91592\traffic\sheets\91592TP001.dgn 2/2/2012 4:45:55 PM jroth

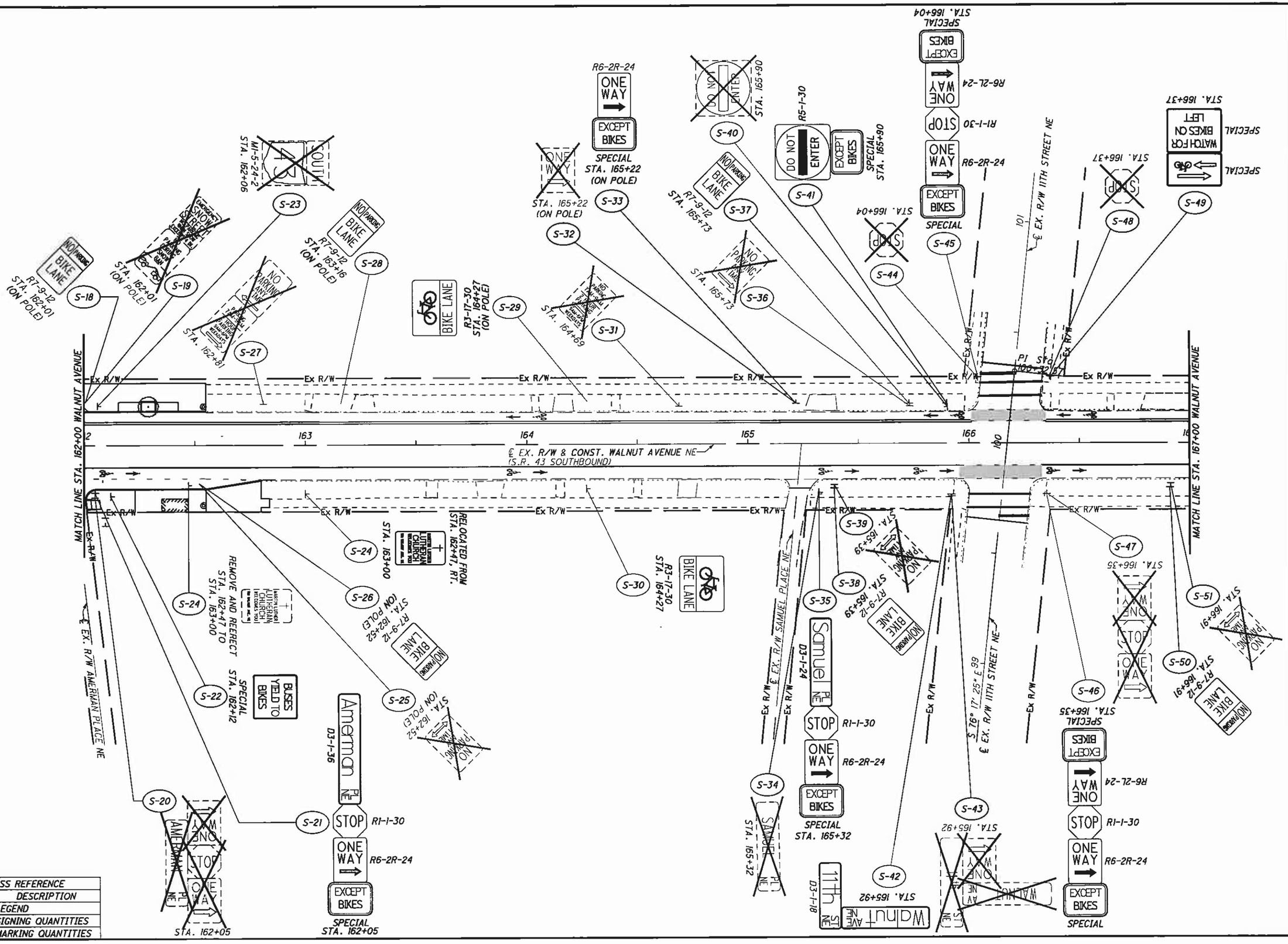

CROSS REFERENCE	
SHEET	DESCRIPTION
XX	LEGEND
57	SIGNING QUANTITIES
68	MARKING QUANTITIES

R:\Stark\SARTA\Task 3 Canton\STA\91592\traffic\sheets\91592TP002.dgn 2/2/2012 4:47:32 PM jroth

CALCULATED HEH
CHECKED WLC

HORIZONTAL SCALE IN FEET 0 10 20

WALNUT & CHERRY COMPLETE STREET BIKE LANES

SIGNING PLAN - WALNUT AVENUE STA. 162+00 TO STA. 167+00

TP 2

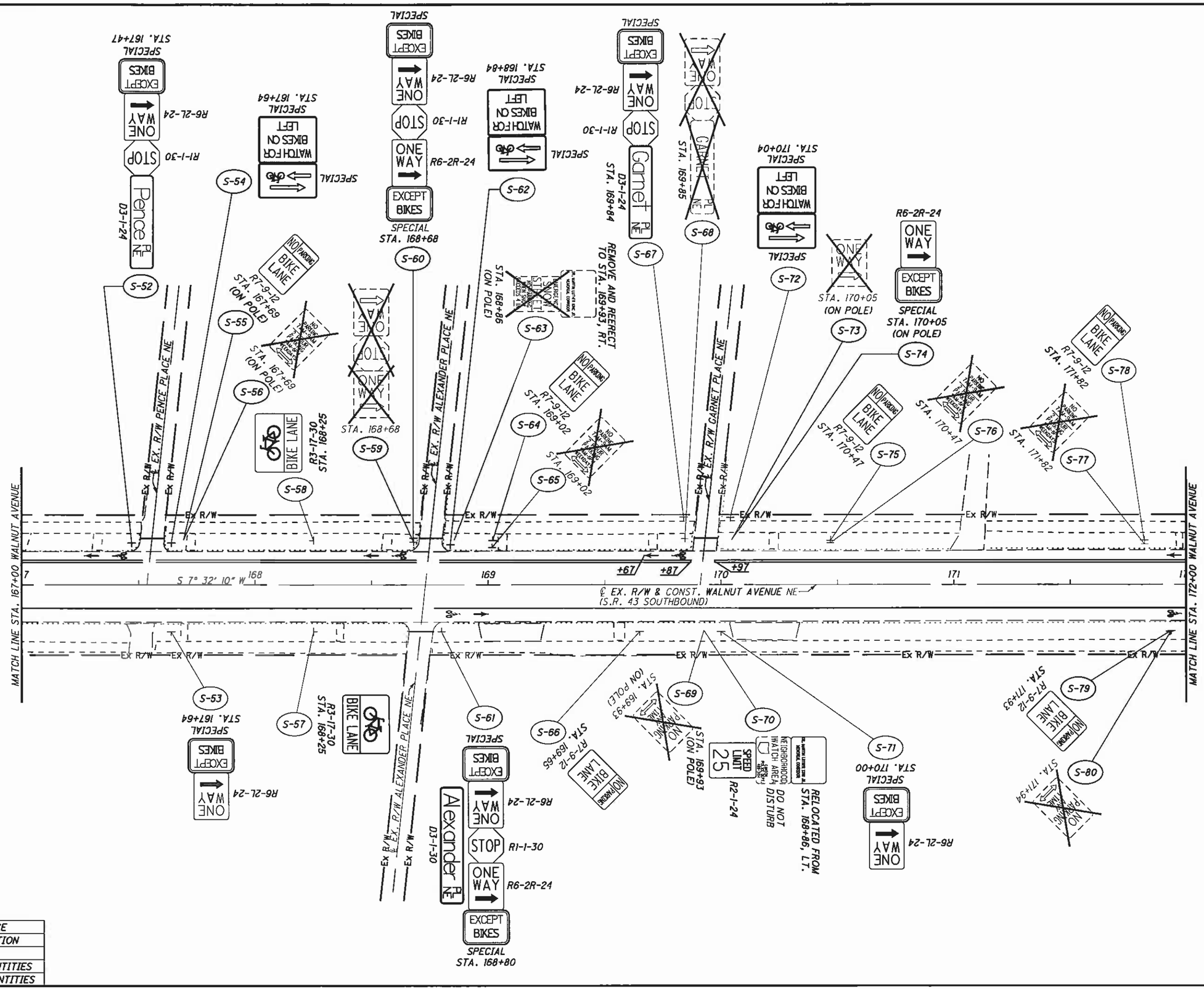

CROSS REFERENCE	
SHEET	DESCRIPTION
XX	LEGEND
57	SIGNING QUANTITIES
68	MARKING QUANTITIES

R:\Stark\SARTA\Task 3 Canton\STA\91592\traffic\sheets\91592TP003.dgn 2/2/2012 4:48:08 PM jroth

HORIZONTAL SCALE IN FEET 0 10 20 40

CALCULATED HEH
CHECKED WLC

WALNUT & CHERRY COMPLETE STREET BIKE LANES

SIGNING PLAN - WALNUT AVENUE
STA. 167+00 TO STA. 172+00

TP 3

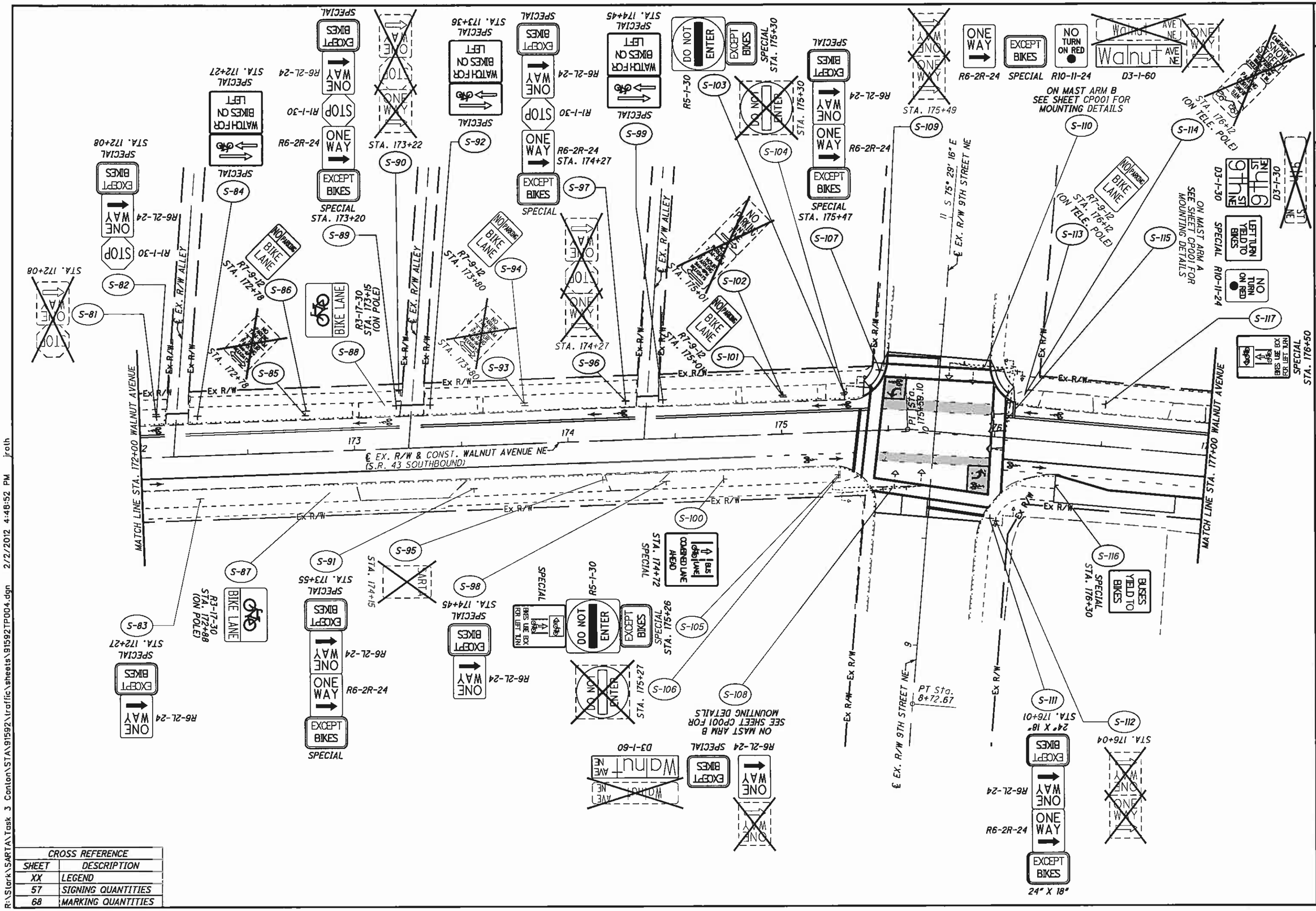

CROSS REFERENCE	
SHEET	DESCRIPTION
XX	LEGEND
57	SIGNING QUANTITIES
68	MARKING QUANTITIES

SIGNING PLAN - WALNUT AVENUE
STA. 172+00 TO STA. 177+00

WALNUT & CHERRY COMPLETE STREET BIKE LANES

TP 4

R:\Stark\SARTA\Task 3 Canton\STA\91592\traffic\sheets\91592TP004.dgn 2/2/2012 4:48:52 PM jroth

R:\Stark\SARTA\Task 3 Canton\STA\91592\traffic\sheets\91592TP005.dgn 2/2/2012 4:49:32 PM jrath

CROSS REFERENCE	
SHEET	DESCRIPTION
XX	LEGEND
57	SIGNING QUANTITIES
68	MARKING QUANTITIES

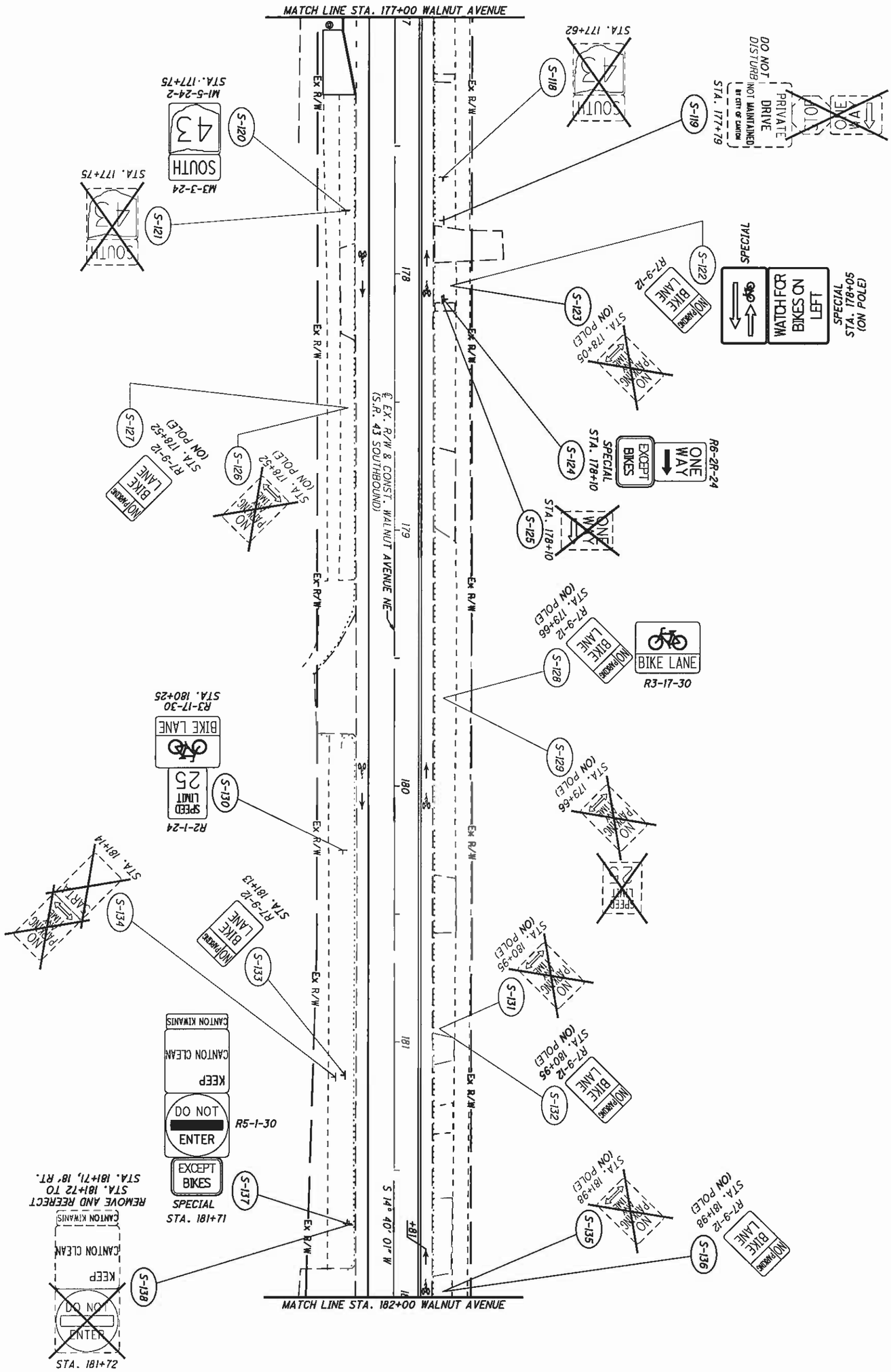

TP 5	WALNUT & CHERRY COMPLETE STREET BIKE LANES	SIGNING PLAN - WALNUT AVENUE STA. 177+00 TO STA. 182+00	CALCULATED HEH / CHECKED WLC	0 10 20 40 HORIZONTAL SCALE IN FEET	N

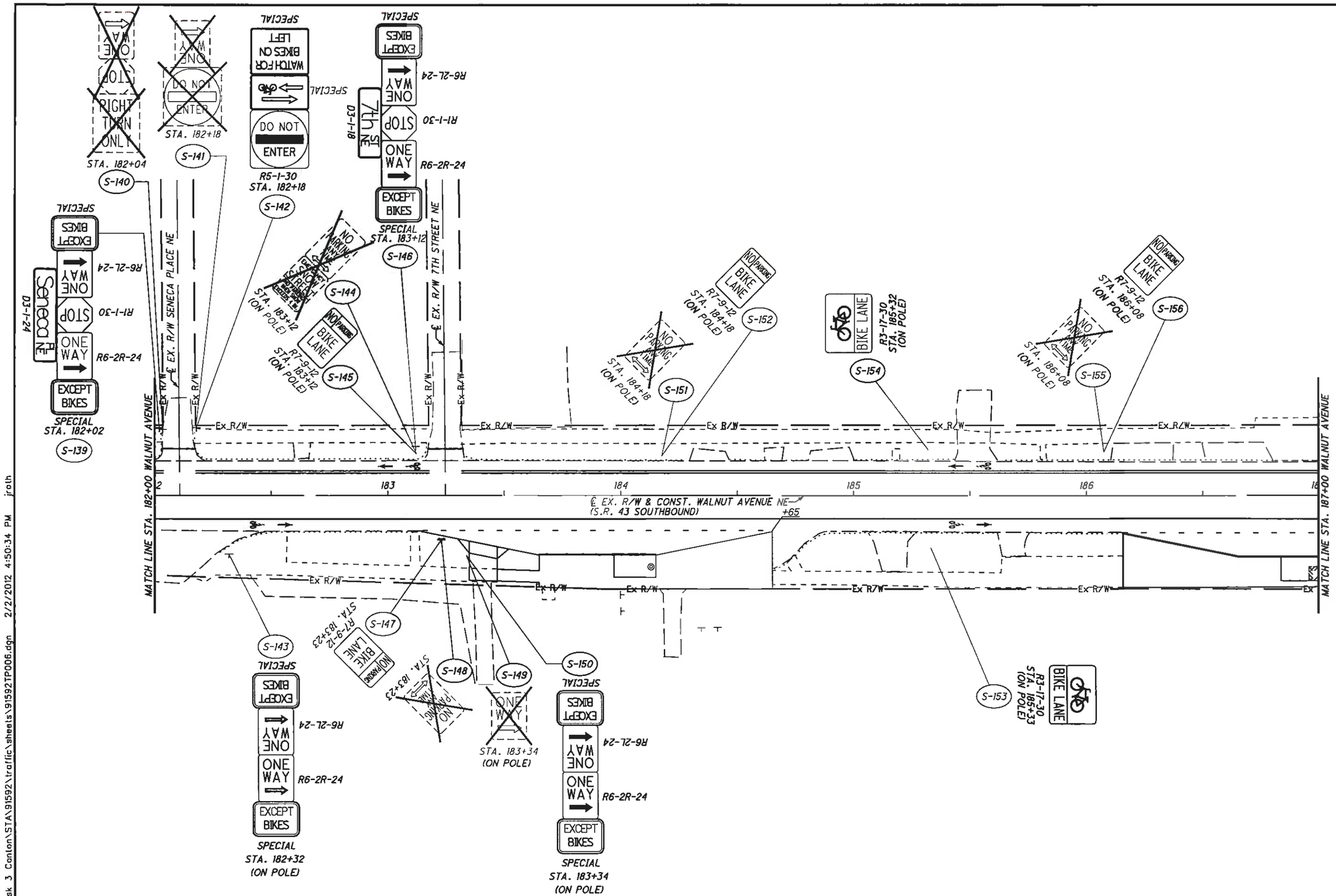

CROSS REFERENCE	
SHEET	DESCRIPTION
XX	LEGEND
57	SIGNING QUANTITIES
68	MARKING QUANTITIES

HORIZONTAL SCALE IN FEET 0 10 20 40

CALCULATED HEH
CHECKED WLC

SIGNING PLAN - WALNUT AVENUE
STA. 182+00 TO STA. 187+00

WALNUT & CHERRY COMPLETE STREET BIKE LANES

TP 6

R:\Stark\SART\Task 3 Canton\STA\91592\traffic\sheets\91592TP006.dgn 2/2/2012 4:50:34 PM jrath

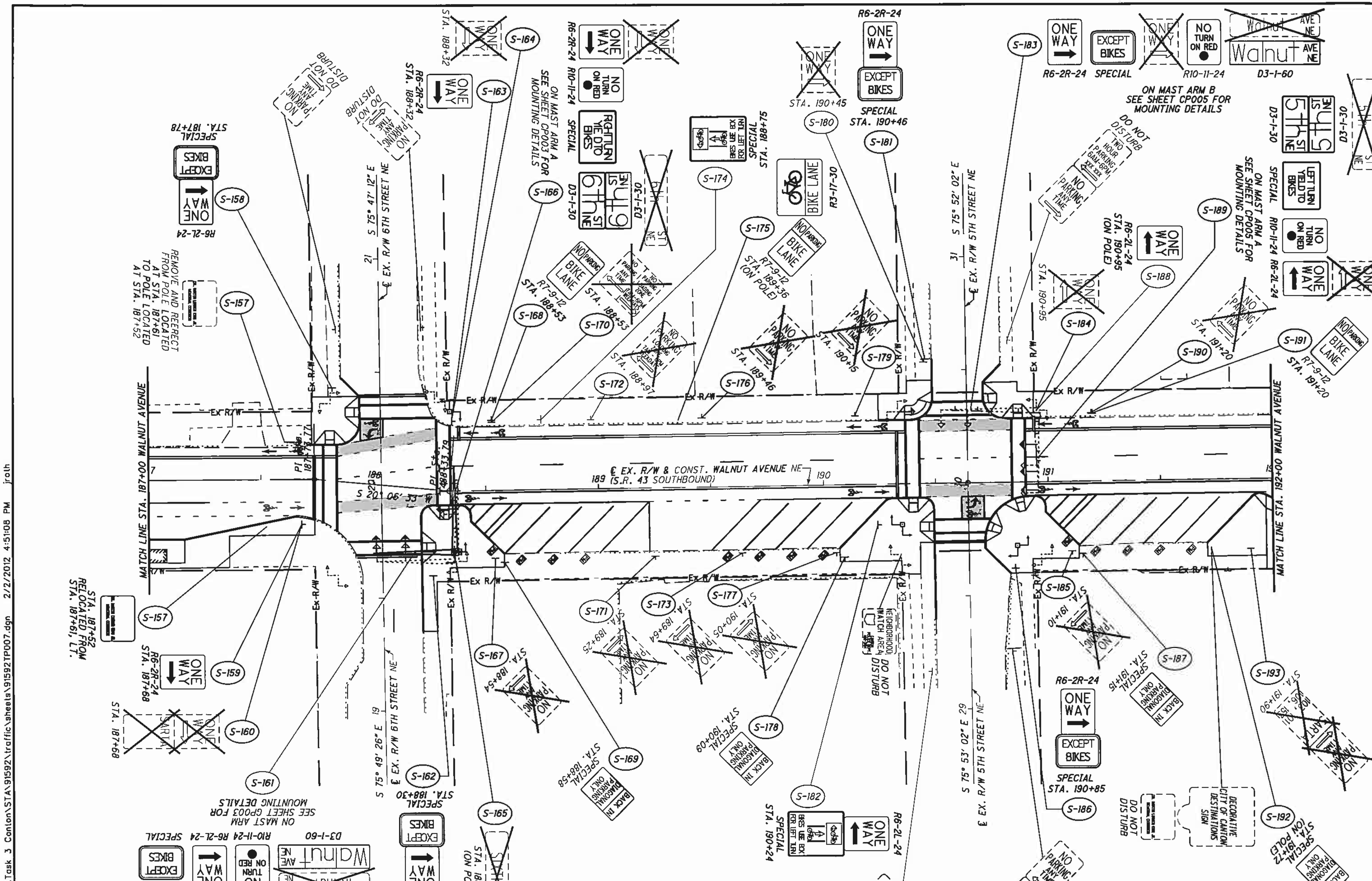

CROSS REFERENCE	
SHEET	DESCRIPTION
XX	LEGEND
57	SIGNING QUANTITIES
68	MARKING QUANTITIES

CALCULATED HEH
CHECKED WLC

HORIZONTAL SCALE IN FEET 0 10 20 40

SIGNING PLAN - WALNUT AVENUE
STA. 187+00 TO STA. 192+00

WALNUT & CHERRY COMPLETE STREET BIKE LANES

TP 7

R:\Stark\SARTA\Task 3 Canton\STA\91592\traffic\sheets\91592TP007.dgn 2/2/2012 4:51:08 PM jroth

R:\Stark\SARTA\Task 3 Canton\STA\91592\traffic\sheets\91592TP008.dgn 2/2/2012 4:52:20 PM jroth

SHEET	DESCRIPTION
XX	LEGEND
57	SIGNING QUANTITIES
68	MARKING QUANTITIES

CROSS REFERENCE

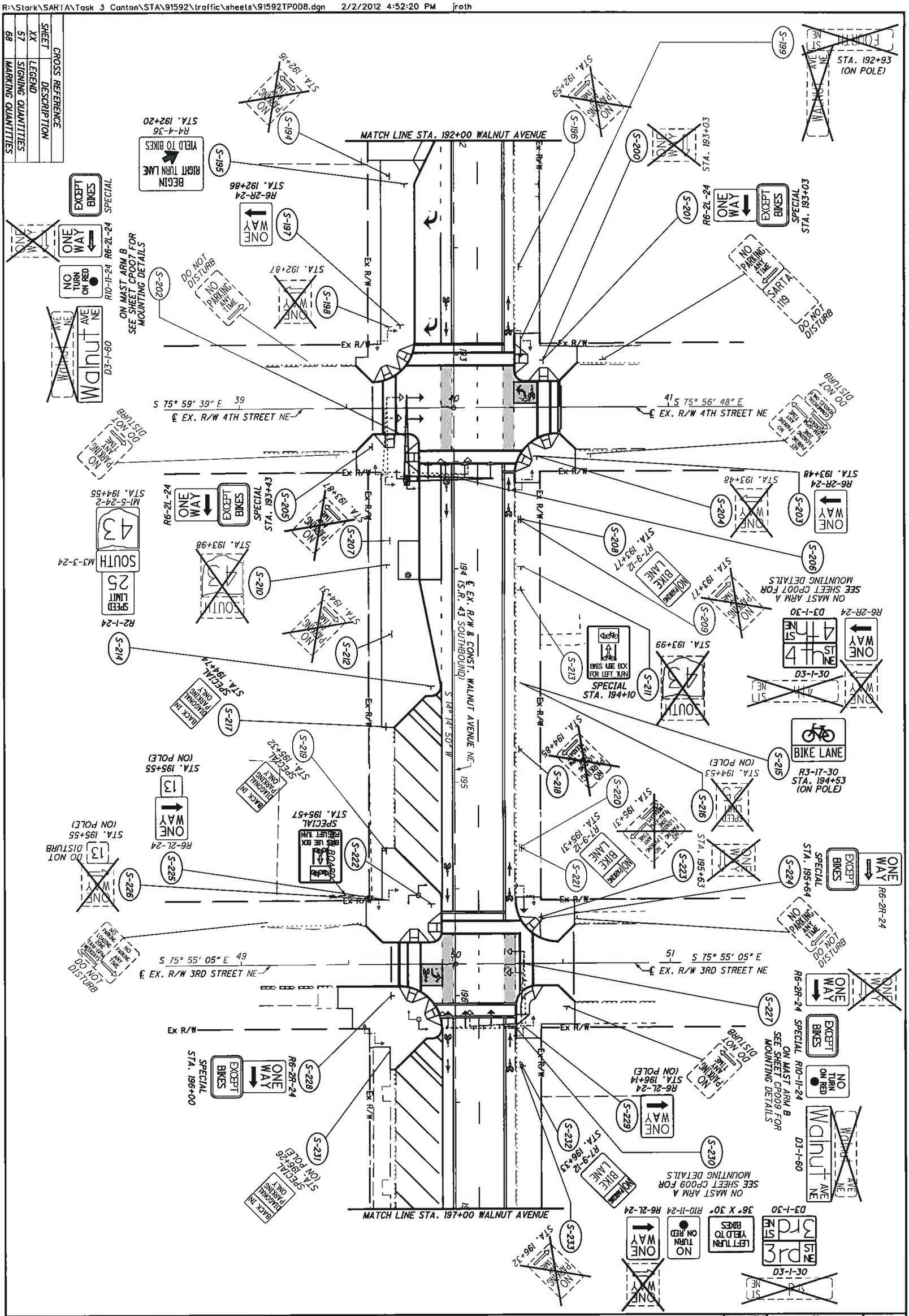

TP 8

WALNUT & CHERRY COMPLETE STREET BIKE LANES

SIGNING PLAN - WALNUT AVENUE
STA. 192+00 TO STA. 197+00

CALCULATED HEH
CHECKED WLC

HORIZONTAL SCALE IN FEET 0 10 20 40

R:\Stark\SARTA\Task 3 Canton\STA\91592\traffic\sheets\91592TP009.dgn 2/2/2012 4:53:26 PM jroth

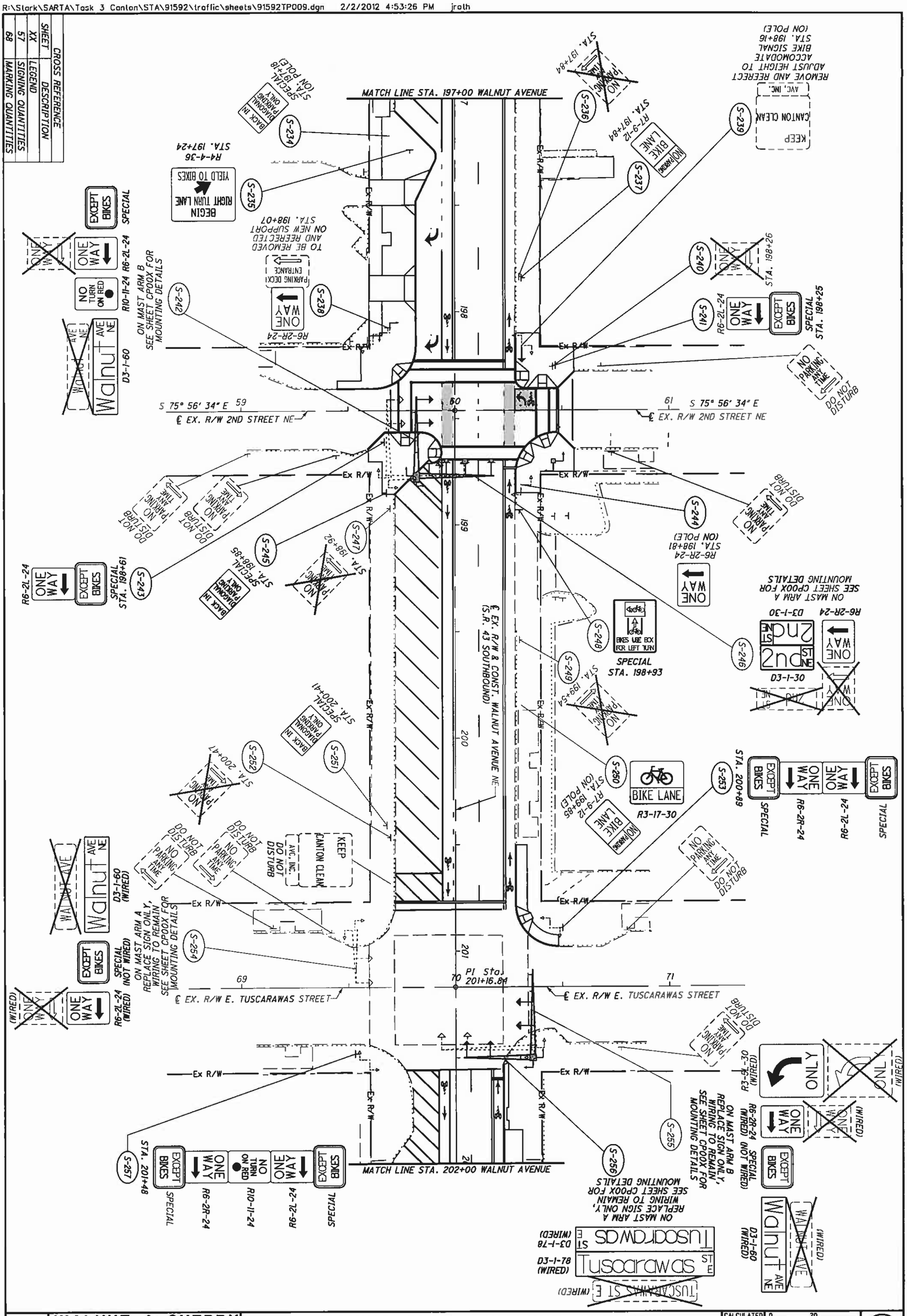

TP 9

WALNUT & CHERRY COMPLETE STREET BIKE LANES

SIGNING PLAN - WALNUT AVENUE
STA. 197+00 TO STA. 202+00

CALCULATED HEH
CHECKED WLC

0 10 20 40
HORIZONTAL SCALE IN FEET

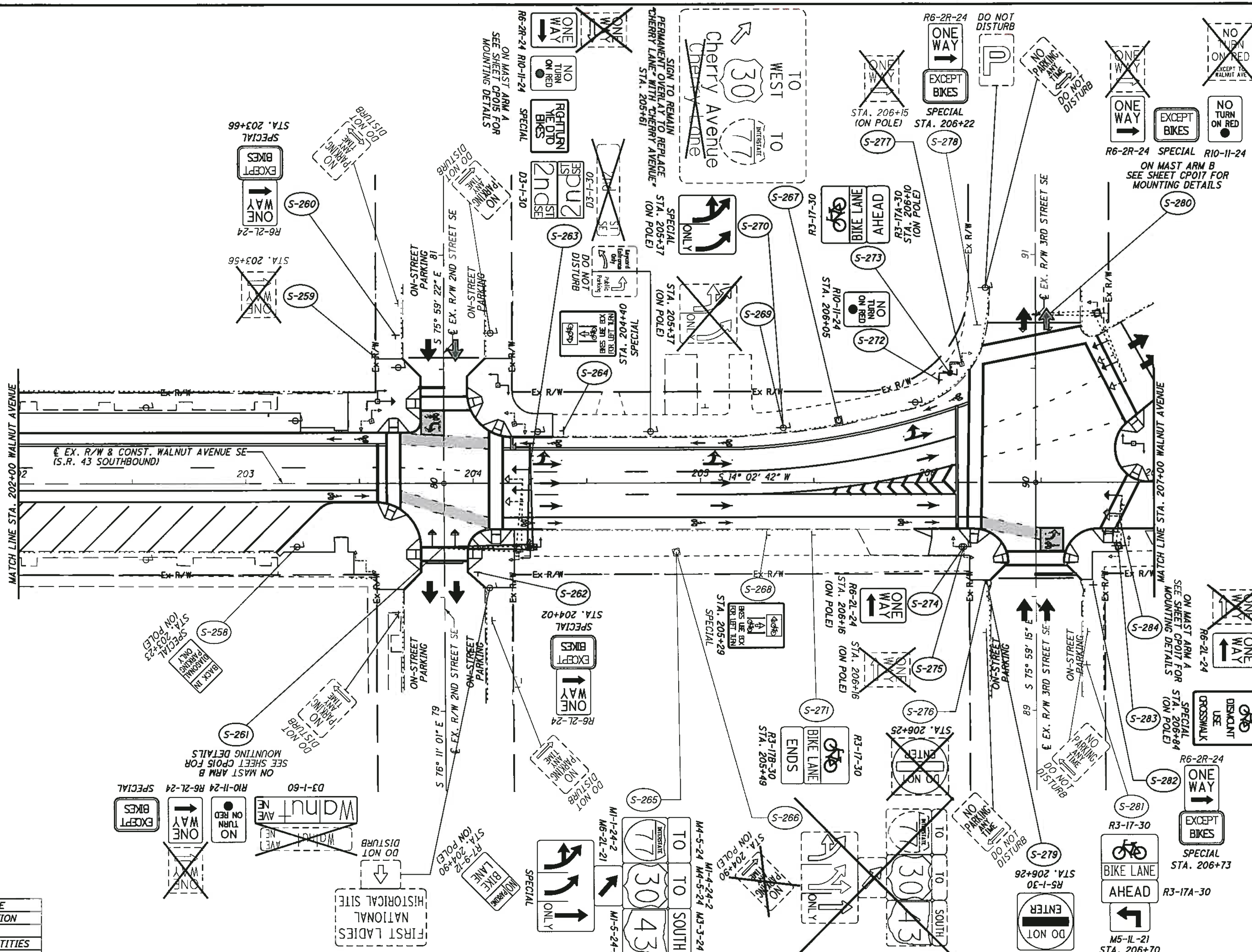

CROSS REFERENCE	
SHEET	DESCRIPTION
XX	LEGEND
57	SIGNING QUANTITIES
68	MARKING QUANTITIES

CALCULATED HEH
CHECKED WLC

SIGNING PLAN - WALNUT AVENUE
STA. 202+00 TO STA. 207+00

WALNUT & CHERRY COMPLETE STREET BIKE LANES

TP 10

R:\Stark\SARTA\Task 3 Canton\STA\91592\traffic\sheets\91592TP010.dgn 2/2/2012 4:54:01 PM jroth

CROSS REFERENCE	
SHEET	DESCRIPTION
XX	LEGEND
57	SIGNING QUANTITIES
68	MARKING QUANTITIES

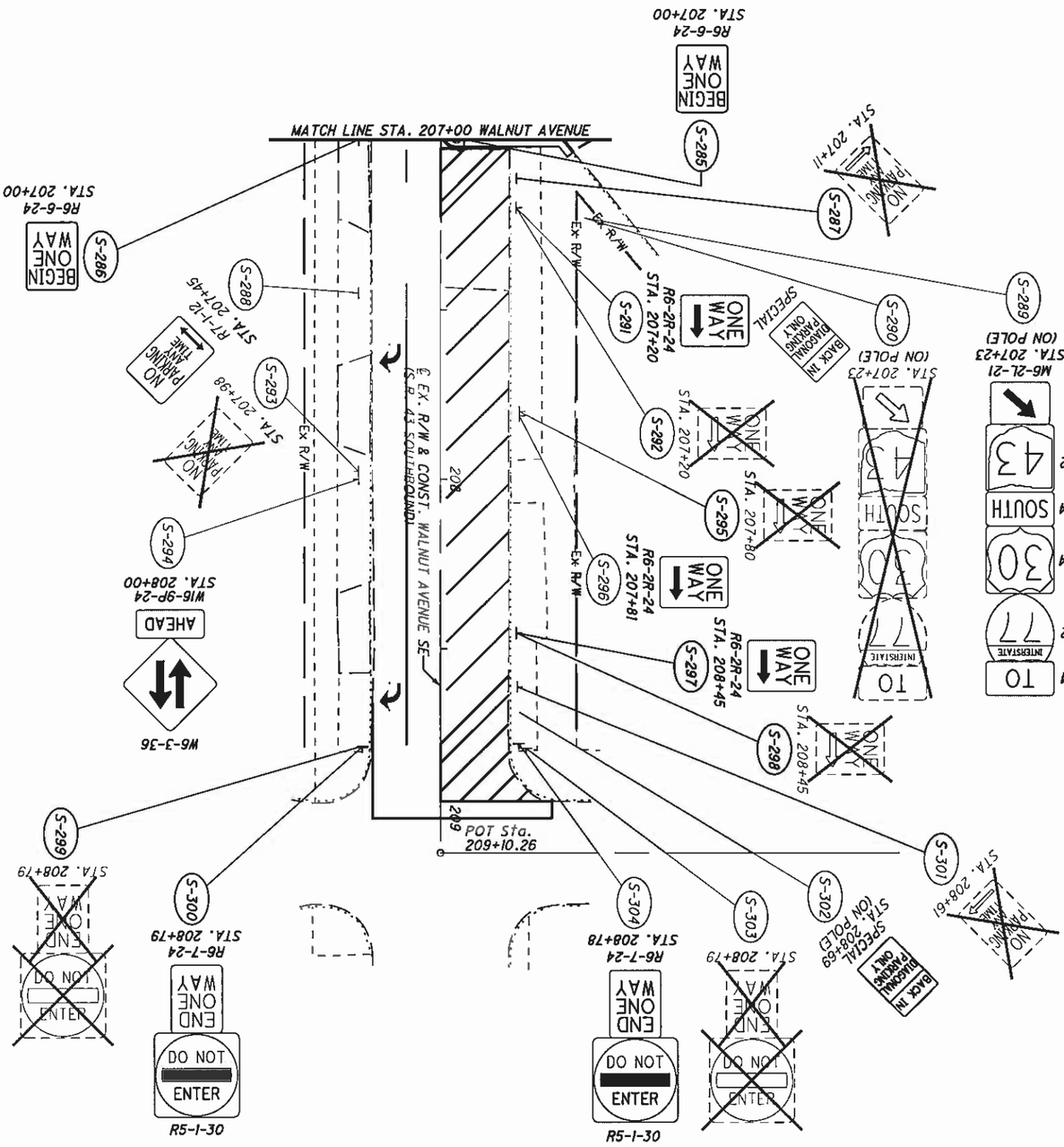

TP 11	WALNUT & CHERRY COMPLETE STREET BIKE LANES	SIGNING PLAN - WALNUT AVENUE STA. 207+00 TO STA. 212+00	CALCULATED HEH / CHECKED WLC / 0 10 20 40 HORIZONTAL SCALE IN FEET / N

PAVEMENT MARKING LEGEND

- BB-X BIKE BOX, GREEN
- BS-X BIKE SYMBOL
- CH-X CHANNELIZING LINE
- CL-X CENTER LINE, SOLID, DOUBLE
- CW-X CROSSWALK LINE
- DL-X DOTTED LINE
- LA-X LANE ARROW
- LL-X LANE LINE
- PL-X PAINTED LANE, GREEN
- PS-X PARKING STALL LINE
- SL-X STOP LINE
- TL-X TRANSVERSE/DIAGONAL LINE

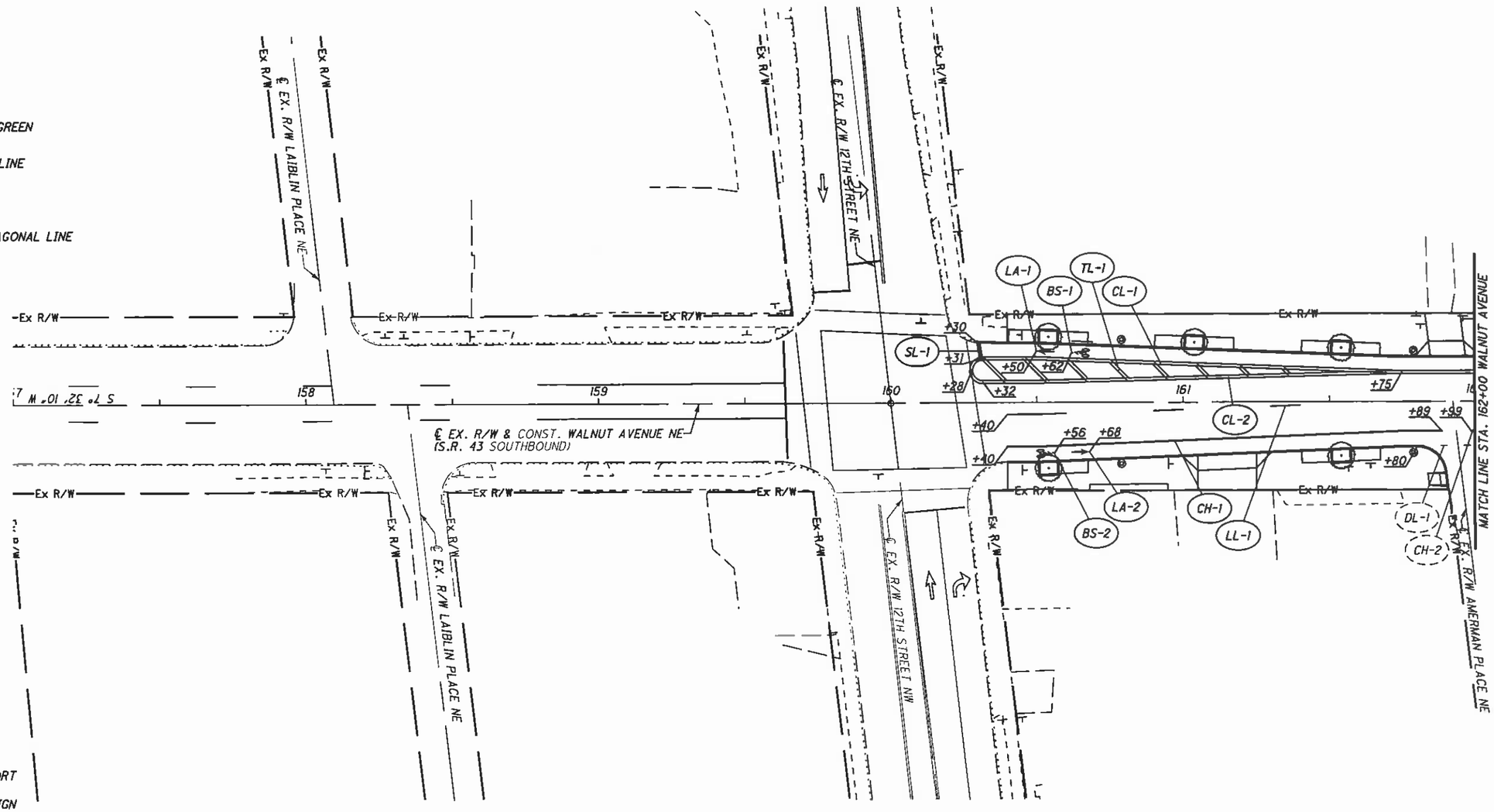

SIGNING LEGEND

- SIGN SUPPORT
- EXISTING SIGN TO REMAIN
- EXISTING SIGN TO BE REMOVED (OR REERECTED)
- PROPOSED SIGN
- S-X SIGN REFERENCE NUMBER

CROSS REFERENCE	
SHEET	DESCRIPTION
XX	LEGEND
57	SIGNING QUANTITIES
68	MARKING QUANTITIES

R:\Stark\SARTA\Task 3 Canton\STA\91592\traffic\sheets\91592TP001A.dgn 2/2/2012 4:46:13 PM jroth

HORIZONTAL SCALE IN FEET 0 10 20 40

CALCULATED HEH
CHECKED WLC

PAVEMENT MARKING PLAN - WALNUT AVENUE
STA. 157+00 TO STA. 162+00

WALNUT & CHERRY COMPLETE STREET BIKE LANES

TP 1A

R:\Stark\SARTA\Task 3 Canton\STA\91592\traffic\sheets\91592TP002A.dgn 2/2/2012 4:47:52 PM jroth

CROSS REFERENCE	
SHEET	DESCRIPTION
XX	LEGEND
57	SIGNING QUANTITIES
68	MARKING QUANTITIES

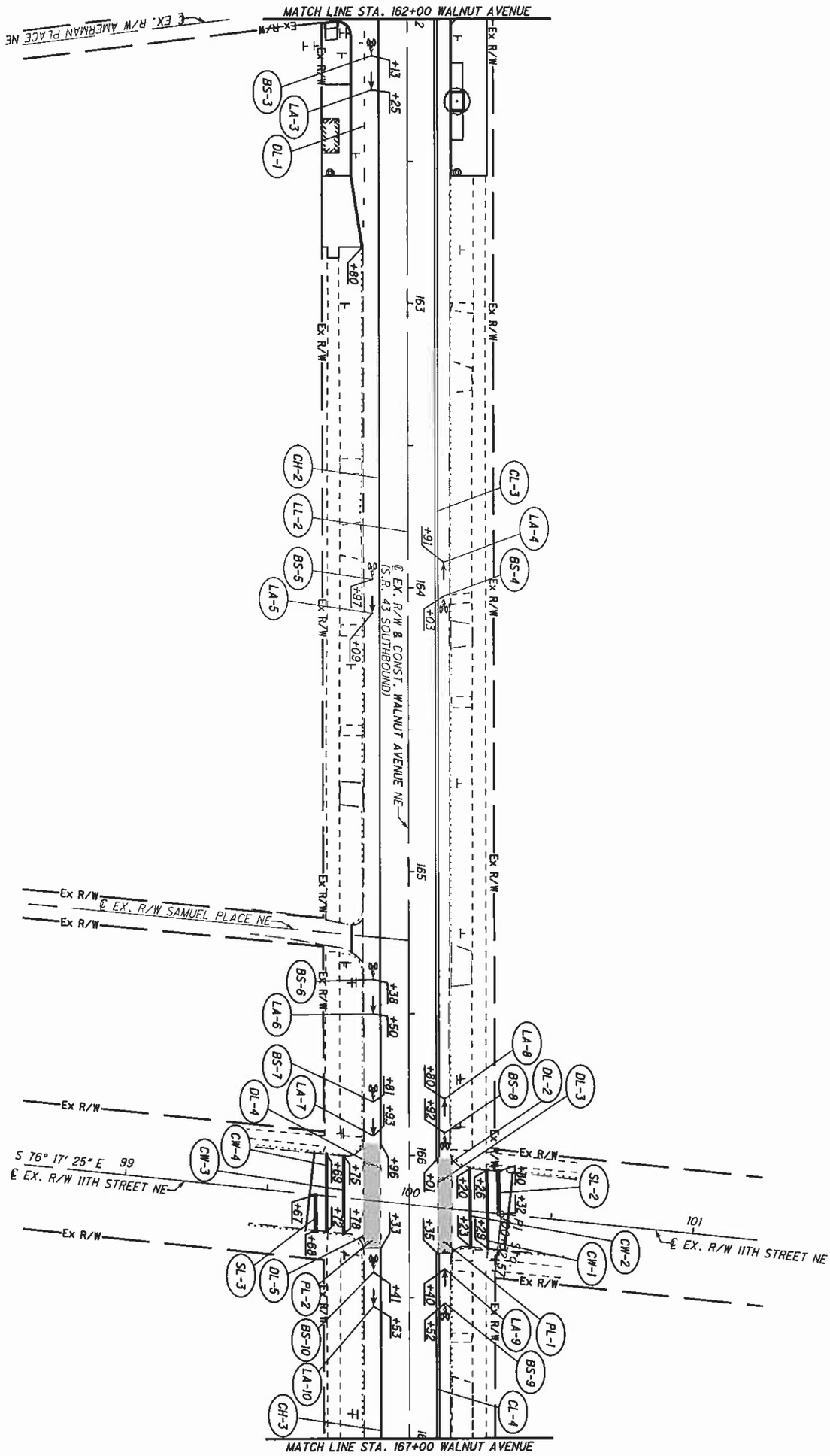

TP 2A	WALNUT & CHERRY COMPLETE STREET BIKE LANES	PAVEMENT MARKING PLAN - WALNUT AVENUE STA. 162+00 TO STA. 167+00	CALCULATED HEH / CHECKED WLC	0 10 20 40 HORIZONTAL SCALE IN FEET

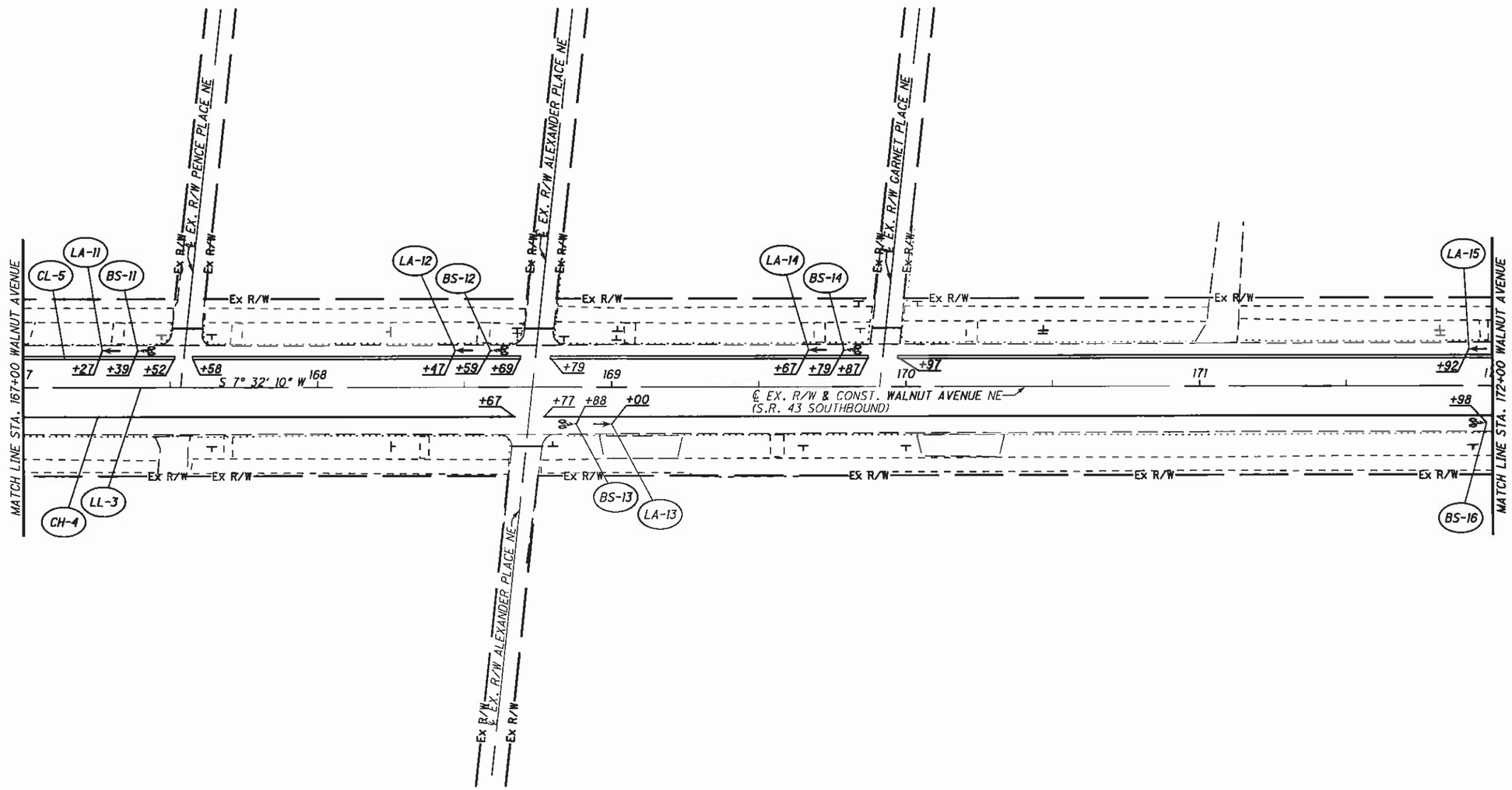

CROSS REFERENCE	
SHEET	DESCRIPTION
XX	LEGEND
57	SIGNING QUANTITIES
68	MARKING QUANTITIES

CALCULATED HEH
CHECKED WLC

0 10 20 40
HORIZONTAL SCALE IN FEET

PAVEMENT MARKING PLAN - WALNUT AVENUE
STA. 167+00 TO STA. 172+00

WALNUT & CHERRY COMPLETE STREET BIKE LANES

TP 3A

R:\Stark\SART\Task 3 Canton\STA\91592\traffic\sheets\91592TP003A.dgn 2/2/2012 4:48:27 PM jroth

R:\Stark\SARTA\Task 3 Canton\STA\91592\traffic\sheets\91592TP004A.dgn 2/2/2012 4:49:12 PM jroth

CROSS REFERENCE	
SHEET	DESCRIPTION
XX	LEGEND
57	SIGNING QUANTITIES
68	MARKING QUANTITIES

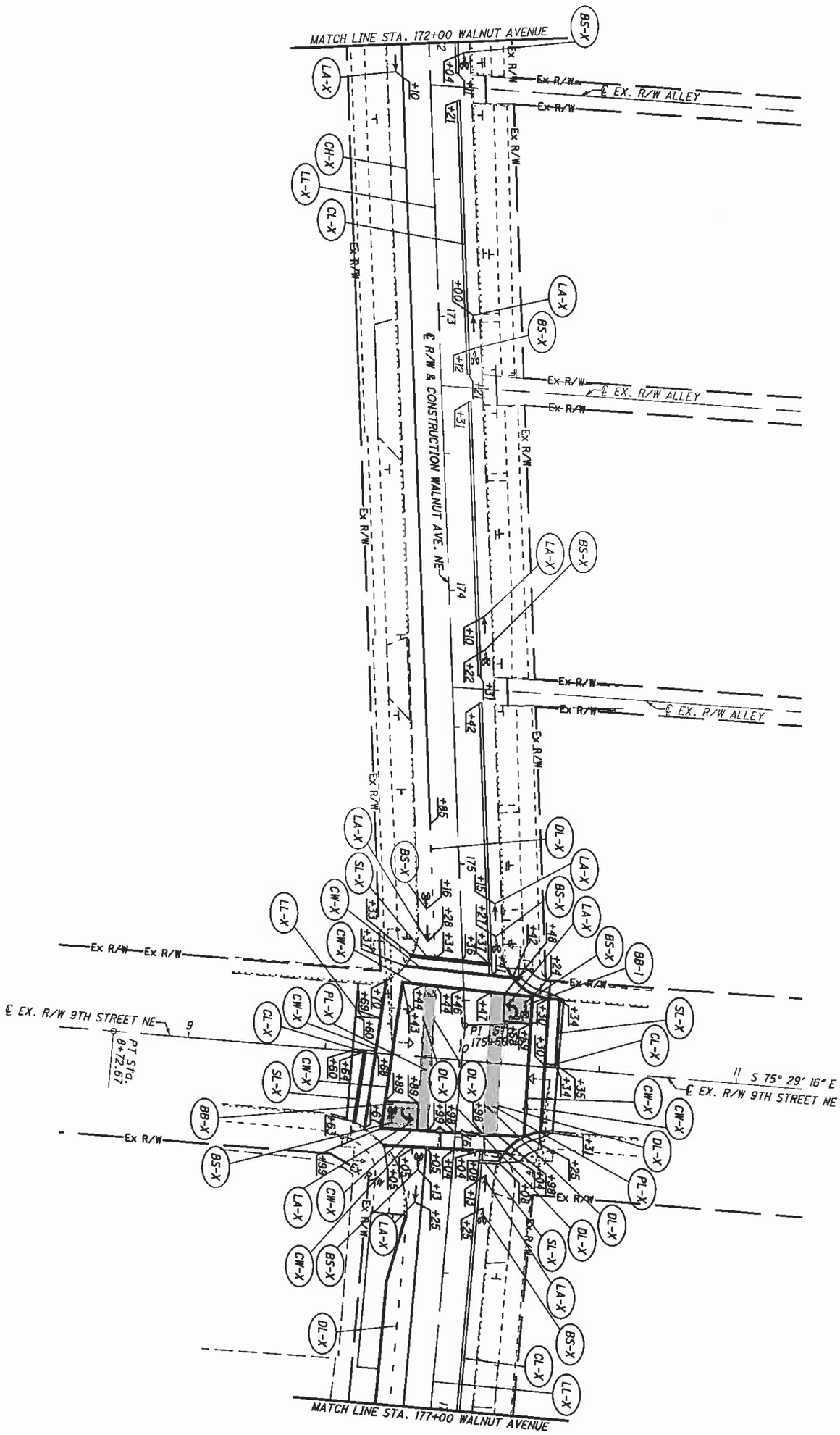

TP 4A	WALNUT & CHERRY COMPLETE STREET BIKE LANES	PAVEMENT MARKING PLAN - WALNUT AVENUE STA. 172+00 TO STA. 177+00	CALCULATED HEH / CHECKED WLC	0 10 20 40 HORIZONTAL SCALE IN FEET

R:\Stark\SARTA\Task 3 Canton\STA\91592\traffic\sheets\91592TP005A.dgn 2/2/2012 4:50:17 PM jroth

CROSS REFERENCE	
SHEET	DESCRIPTION
XX	LEGEND
57	SIGNING QUANTITIES
68	MARKING QUANTITIES

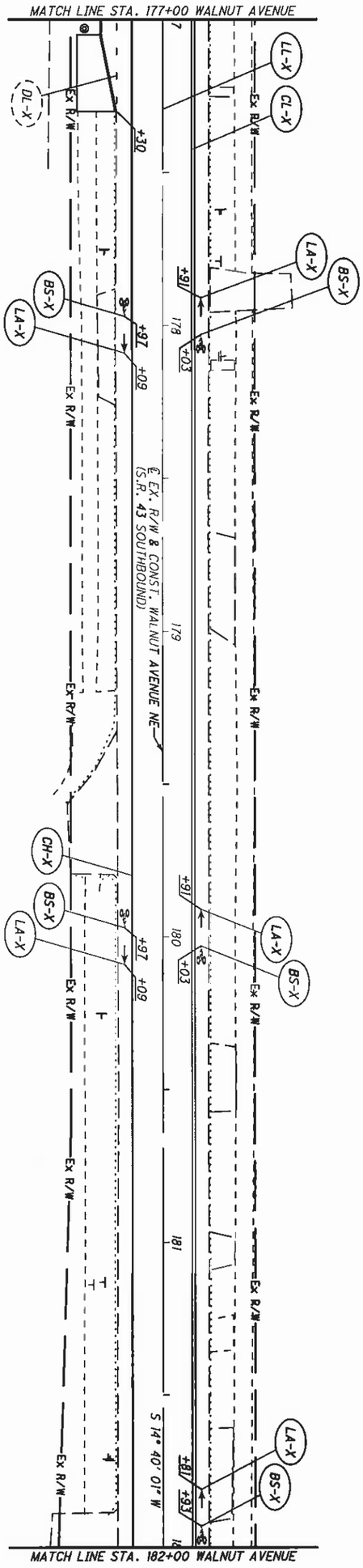

TP 5A

WALNUT & CHERRY COMPLETE STREET BIKE LANES

PAVEMENT MARKING PLAN - WALNUT AVENUE
STA. 177+00 TO STA. 182+00

CALCULATED HEH
CHECKED WLC

0 20 40
10
HORIZONTAL SCALE IN FEET

R:\Stark\SARTA\Task 3 Canton\STA\91592\traffic\sheets\91592TP006A.dgn 2/2/2012 4:50:51 PM jroth

CROSS REFERENCE	
SHEET	DESCRIPTION
XX	LEGEND
57	SIGNING QUANTITIES
68	MARKING QUANTITIES

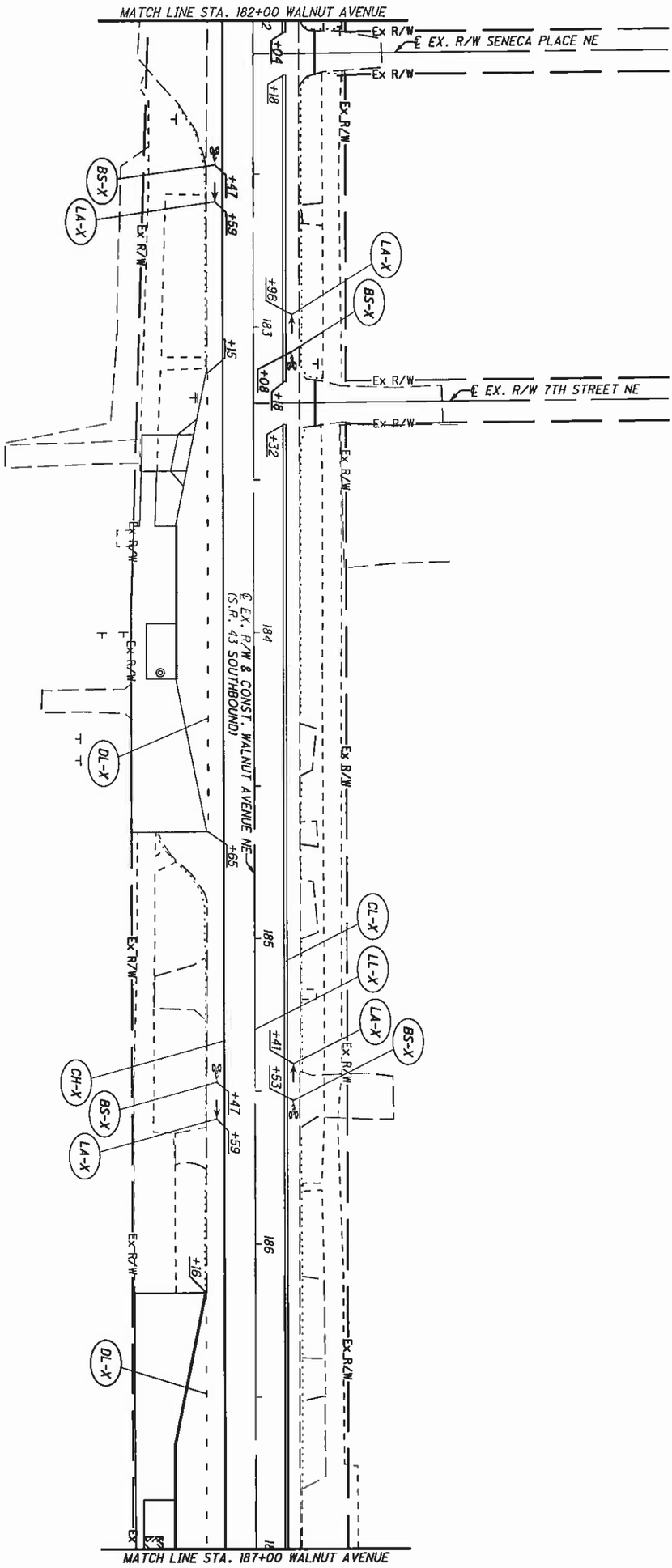

TP 6A	WALNUT & CHERRY COMPLETE STREET BIKE LANES	PAVEMENT MARKING PLAN - WALNUT AVENUE STA. 182+00 TO STA. 187+00	CALCULATED HEH / CHECKED WLC	0 10 20 40 HORIZONTAL SCALE IN FEET

R:\Stark\SARTA\Task 3 Canton\STA\91592\traffic\sheets\91592TP007A.dgn 2/2/2012 4:51:42 PM jroth

CROSS REFERENCE	
SHEET	DESCRIPTION
XX	LEGEND
57	SIGNING QUANTITIES
68	MARKING QUANTITIES

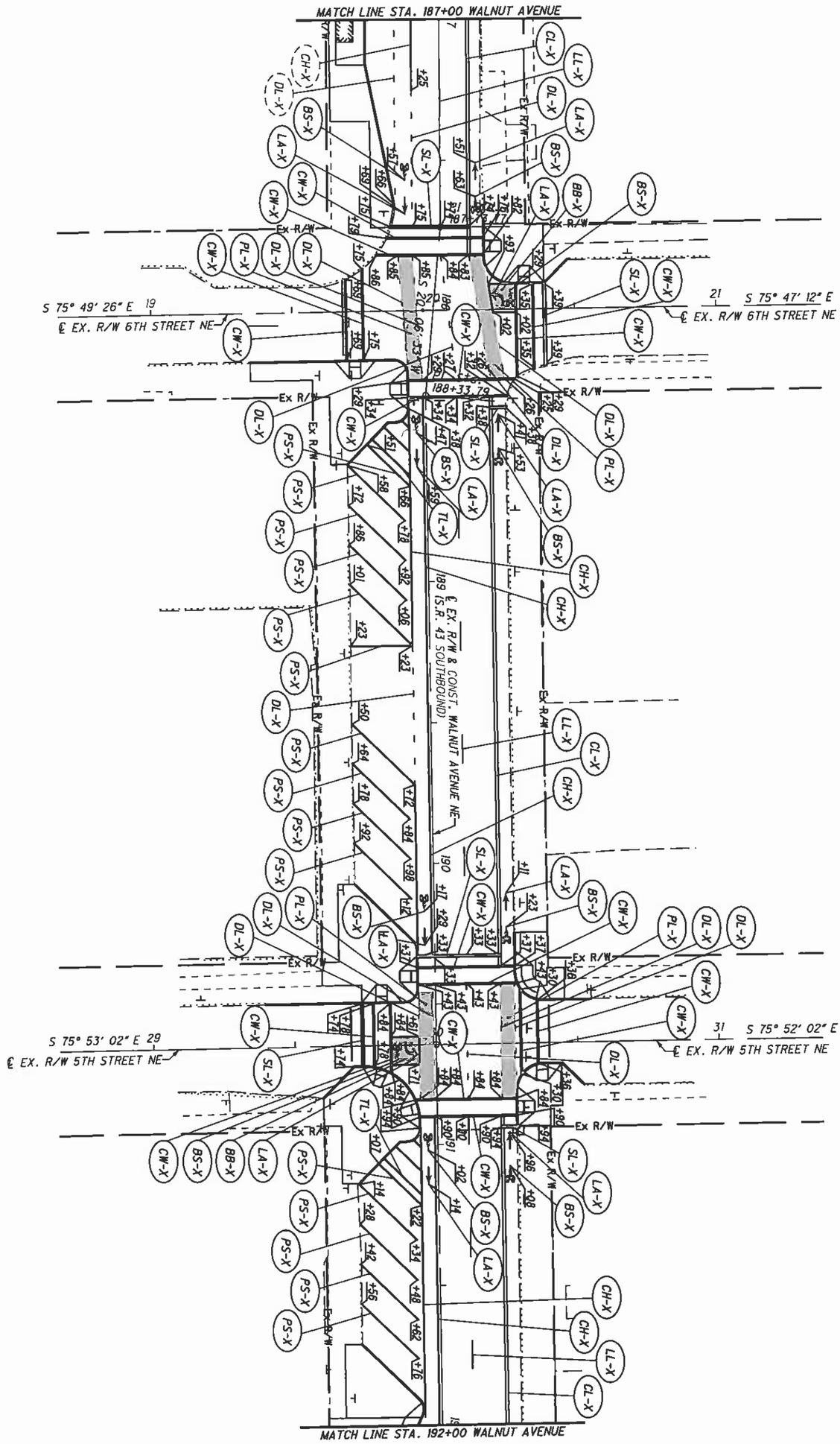

TP TA	WALNUT & CHERRY COMPLETE STREET BIKE LANES	PAVEMENT MARKING PLAN - WALNUT AVENUE STA. 187+00 TO STA. 192+00	CALCULATED HEH CHECKED WLC HORIZONTAL SCALE IN FEET 0 10 20 40

CROSS REFERENCE	
SHEET	DESCRIPTION
XX	LEGEND
57	SIGNING QUANTITIES
68	MARKING QUANTITIES

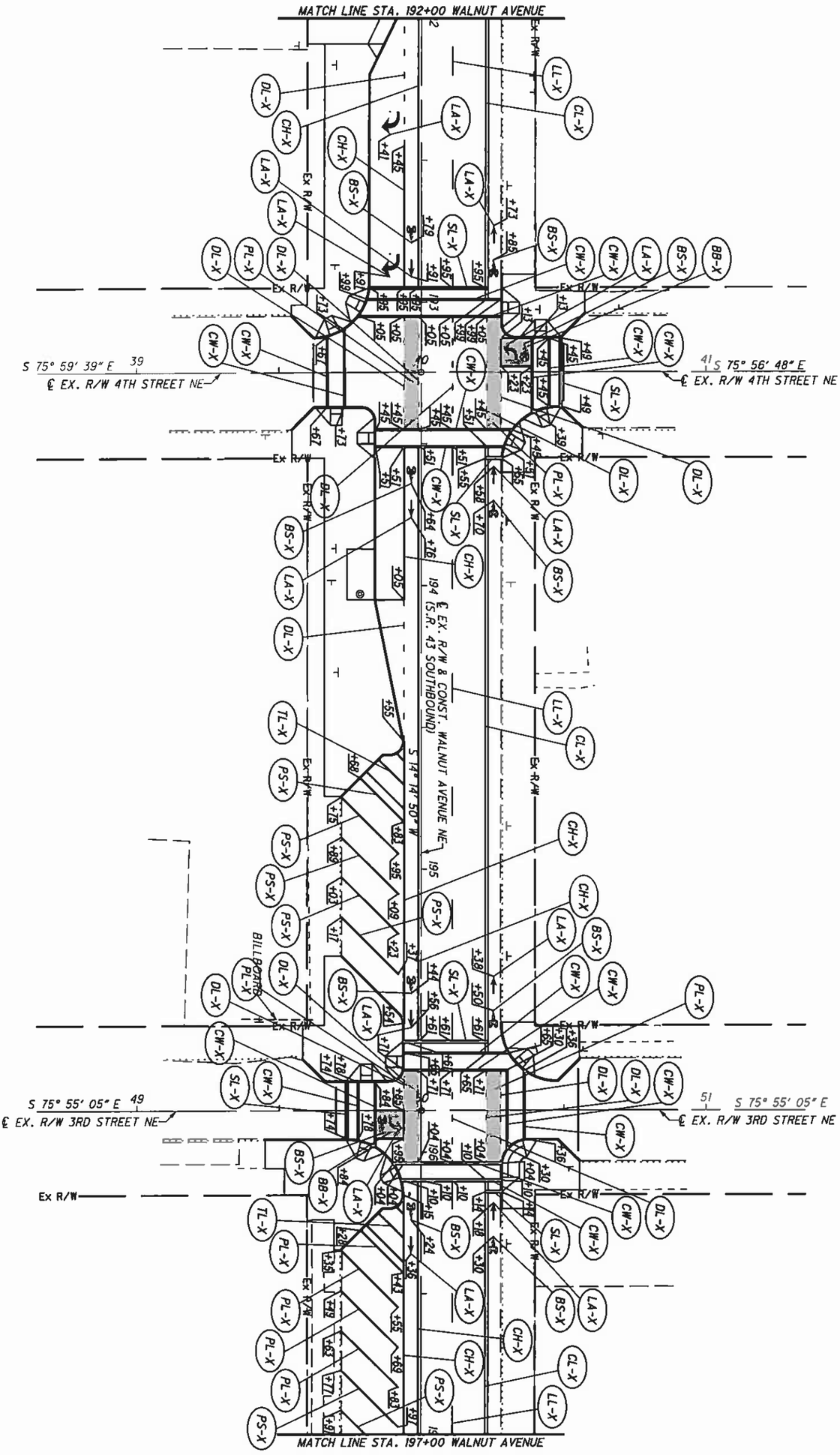

TP 8A	WALNUT & CHERRY COMPLETE STREET BIKE LANES	PAVEMENT MARKING PLAN - WALNUT AVENUE STA. 192+00 TO STA. 197+00	CALCULATED HEH CHECKED WLC HORIZONTAL SCALE IN FEET 0 10 20 40

R:\Stark\SARTA\Task 3 Canton\STA\91592\traffic\sheets\91592TP009A.dgn 2/2/2012 4:53:43 PM jroth

CROSS REFERENCE	
SHEET	DESCRIPTION
XX	LEGEND
57	SIGNING QUANTITIES
69	MARKING QUANTITIES

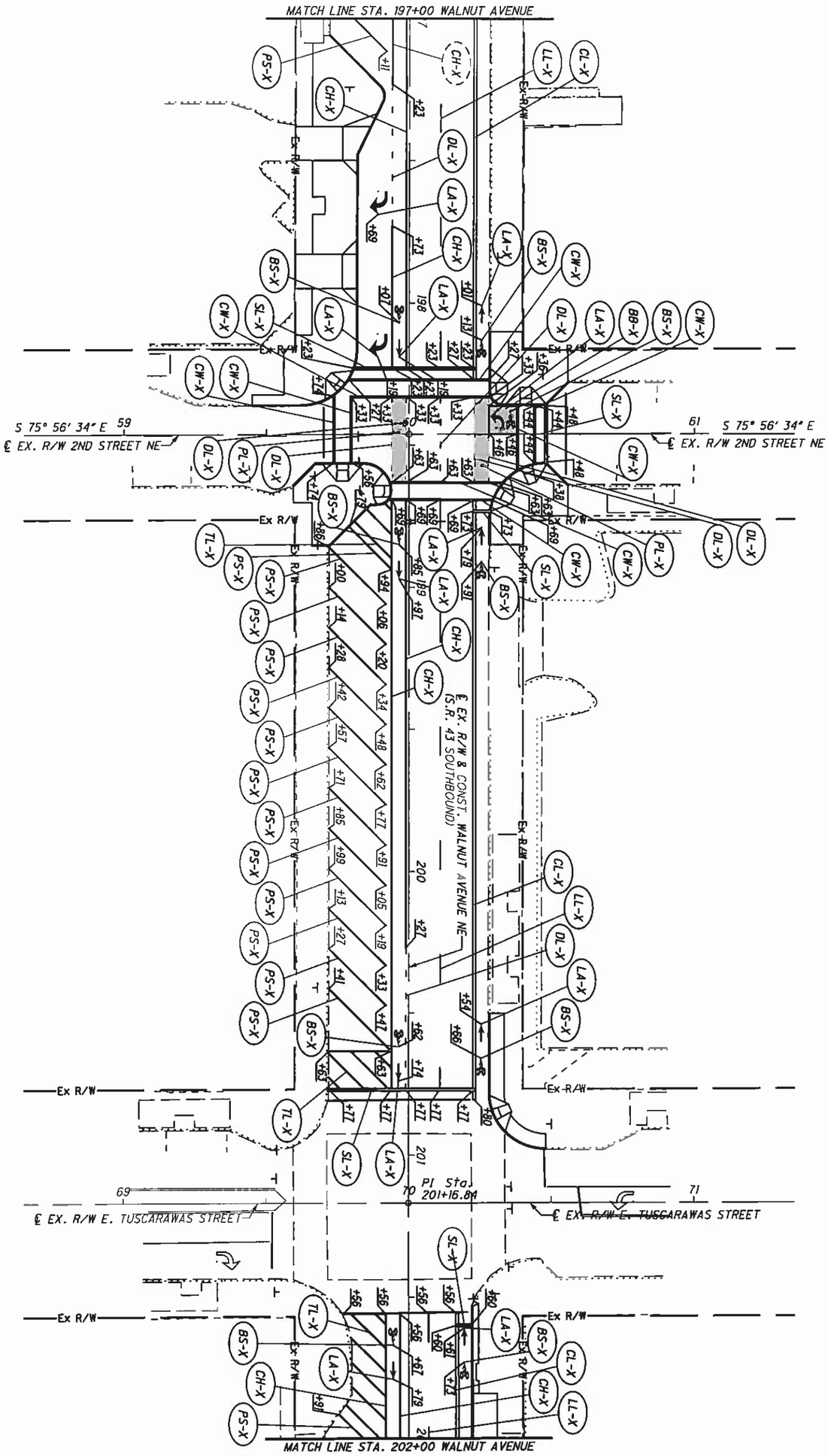

TP 9A	WALNUT & CHERRY COMPLETE STREET BIKE LANES	PAVEMENT MARKING PLAN - WALNUT AVENUE STA. 197+00 TO STA. 202+00	CALCULATED HEH CHECKED WLC HORIZONTAL SCALE IN FEET 0 10 20 40

R:\Stark\SARTA\Task 3 Canton\STA\91592\traffic\sheets\91592TP010A.dgn 2/2/2012 4:54:19 PM jroth

CROSS REFERENCE	
SHEET	DESCRIPTION
XX	LEGEND
57	SIGNING QUANTITIES
68	MARKING QUANTITIES

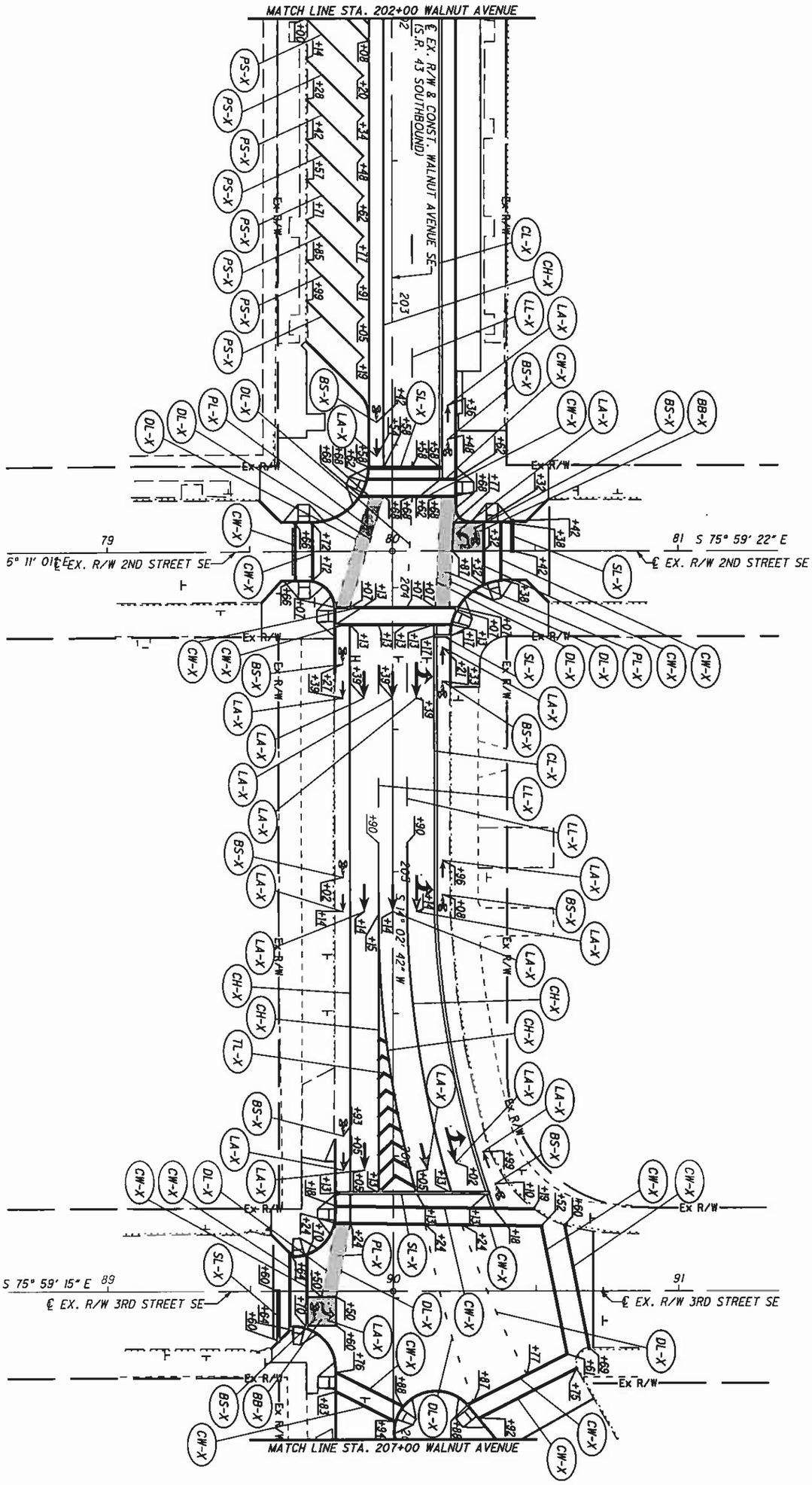

TP 10A	WALNUT & CHERRY COMPLETE STREET BIKE LANES	PAVEMENT MARKING PLAN - WALNUT AVENUE STA. 202+00 TO STA. 207+00	CALCULATED HEH CHECKED WLC HORIZONTAL SCALE IN FEET 0 10 20 40

CROSS REFERENCE	
SHEET	DESCRIPTION
XX	LEGEND
57	SIGNING QUANTITIES
68	MARKING QUANTITIES

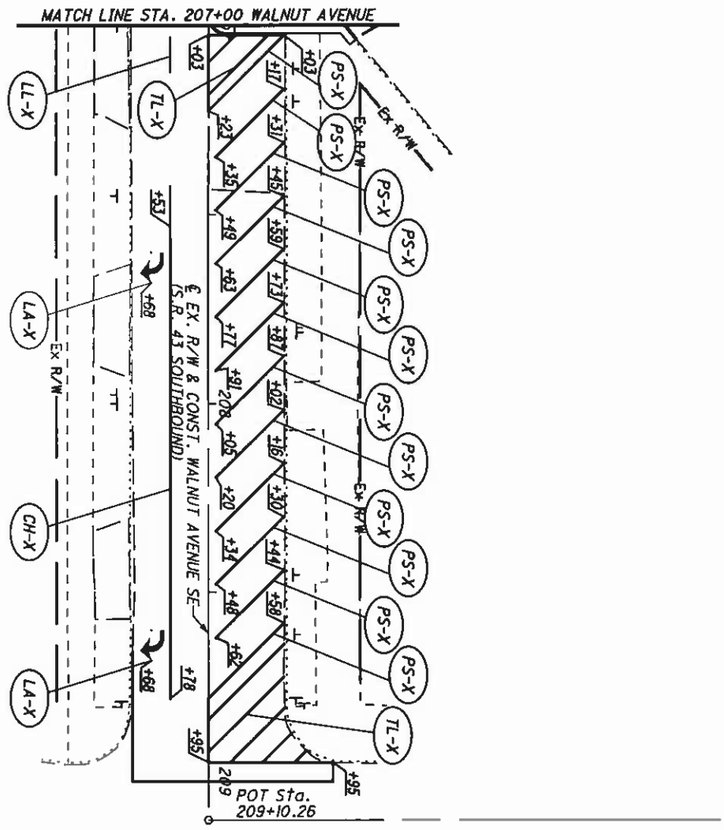

TP 11A	WALNUT & CHERRY COMPLETE STREET BIKE LANES	PAVEMENT MARKING PLAN - WALNUT AVENUE STA. 207+00 TO STA. 212+00	CALCULATED HEH / CHECKED WLC	0 10 20 40 HORIZONTAL SCALE IN FEET	N

SHEET NO.	625 CONDUIT, 2", 725.04	625 CONDUIT, 3", 725.04	625 TRENCH IN PAVED AREA, TYPE B, AS PER PLAN	625 PULL BOX, 725.06, 18"	625 PULL BOX, 725.06, 24"	625 GROUND ROD	625 PLASTIC CAUTION TAPE	625 LIGHT POLE REMOVED FOR REUSE	632 VEHICULAR SIGNAL HEAD, (LED), 3-SECTION, 12" LENS, 1-WAY, POLYCARBONATE, AS PER PLAN	632 COVERING OF VEHICULAR SIGNAL HEAD	632 SIGNAL CABLE, 7 CONDUCTOR, NO. 14 AWG	632 SIGNAL SUPPORT FOUNDATION, AS PER PLAN	632 PEDESTAL FOUNDATION, AS PER PLAN	632 SIGNAL SUPPORT, MISC.: NOSTALGIA SIGNAL SUPPORT - UNION METAL CORP. (TWO-ARM)	632 PEDESTAL, MISC.: NOSTALGIA PEDESTAL - UNION METAL CORP. (8')	632 PEDESTAL, MISC.: NOSTALGIA PEDESTAL WITH TWIN LUMINAIRE NL318R - UNION METAL CORP. (18')	632 REMOVAL OF MISCELLANEOUS TRAFFIC SIGNAL ITEM - PEDESTAL	632 REMOVAL OF MISCELLANEOUS TRAFFIC SIGNAL ITEM - SIGNAL SUPPORT	632 REUSE OF VEHICULAR SIGNAL HEAD, AS PER PLAN	632 REUSE OF PEDESTRIAN SIGNAL HEAD, AS PER PLAN	632 SIGNALIZATION MISC.: BICYCLE SIGNAL POST TOP ASSEMBLY - PELCO INC.	633 PREEMPTION, AS PER PLAN	633 PREEMPTION RECEIVING UNIT, AS PER PLAN	633 PREEMPTION DETECTOR CABLE, AS PER PLAN	633 PREEMPTION CONFIRMATION LIGHT, AS PER PLAN
	FT	FT	FT	EACH	EACH	EACH	FT	EACH	EACH	EACH	FT	EACH	EACH	EACH	EACH	EACH	EACH	EACH	EACH	EACH	EACH	EACH	EACH	EACH	EACH
79											500													120	
81									2	2	351								2			1	1	106	1
83	16	3	19		1	2	19		2	2	504	1	1	1	1		1	1	4	2		2	2	122	2
85	23		23			2	23		2	2	597		2		2		2		2	4	1	2	2	60	2
87		71	71		1	1	71		3	3	403	1		1				1	4	2		2	2	127	2
89	28		28	1		2	28		2	2	549		2		2		2		2	4	1	1	1	60	1
91	21	5	26			2	26		3	3	666	1	1	1	1		2	1	4	6		2	2	121	2
93		9	9			1	9				227	1		1				1	4	2		2	2	162	2
95	40	22	62		1	3	62		2	2	748	1	2	1	1	1	2	1	4	6		2	2	136	2
97	55	48	103	1		2	103	1	1	1	824		1		1				4	2		2	2	290	2
TOTALS CARRIED TO GENERAL SUMMARY	183	158	341	2	3	15	341	1	17	17	5369	5	9	5	8	1	9	5	30	28	2	16	16	1304	16

CALCULATED HEH
CHECKED WLC

TRAFFIC SIGNAL SUBSUMMARY

WALNUT & CHERRY
COMPLETE STREET
BIKE LANES

CS 1

R:\Clark\SARTA\Task 3 Canton\STA\91592\signals\sheets\91592CS001.dgn 2/2/2012 4:44:04 PM jroth

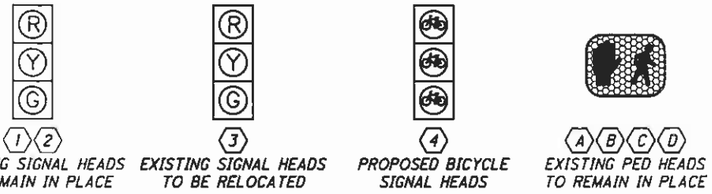

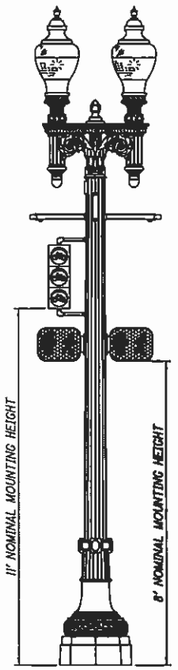

BICYCLE SIGNAL MOUNTING DETAIL
NOT TO SCALE

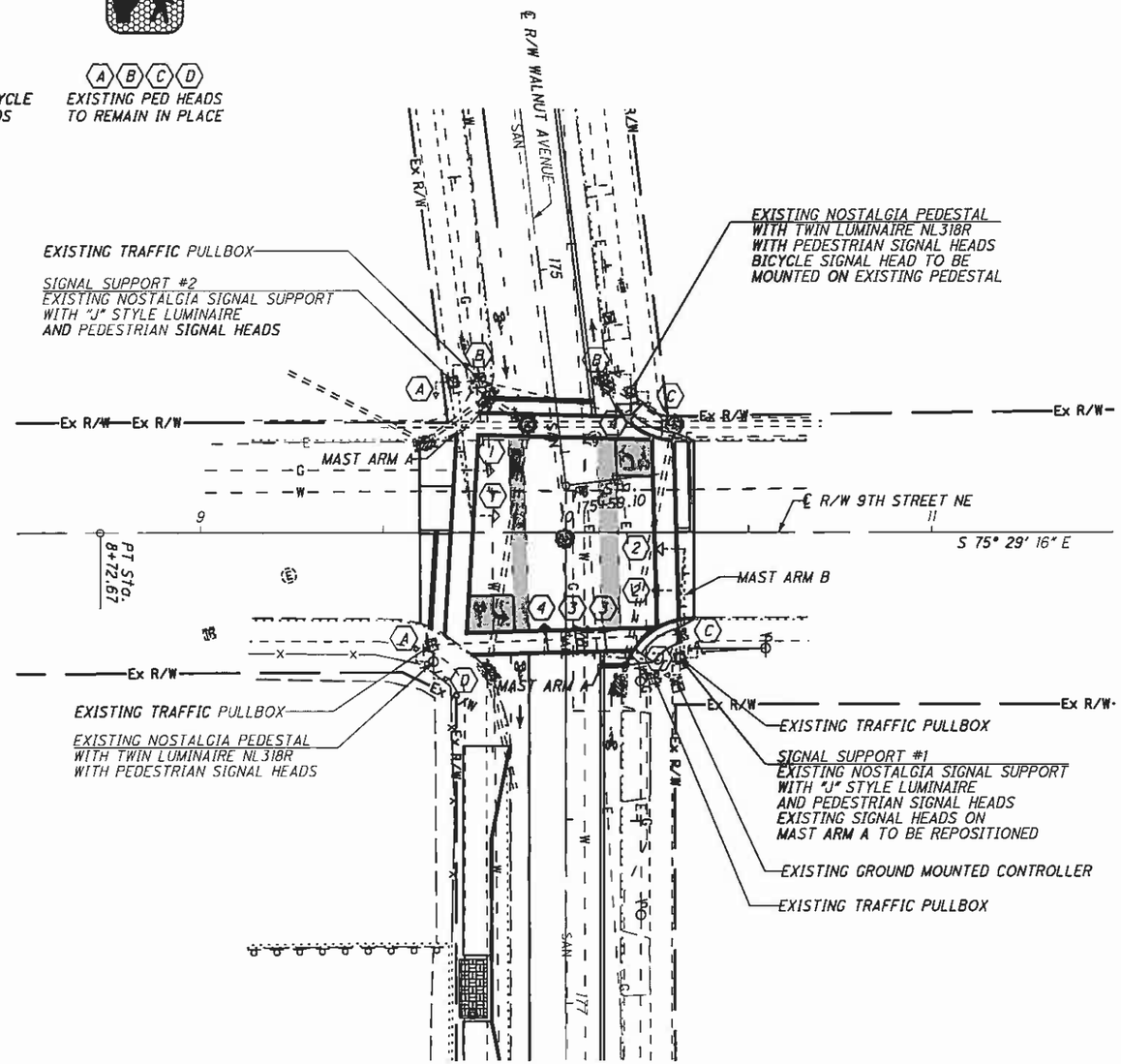

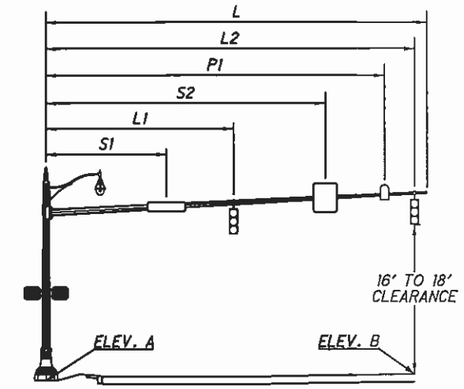

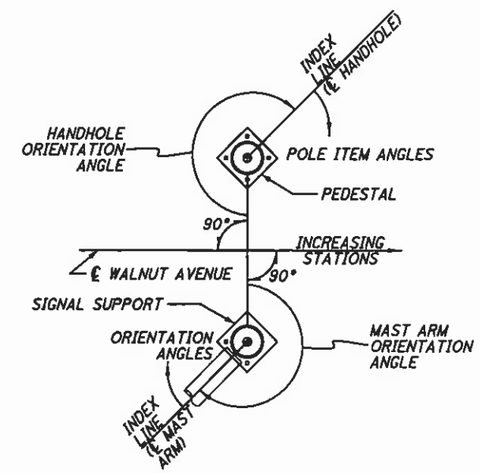

NOTES

1.) SIGNAL HEAD CONDUIT BRACKETS AND CONDUIT FITTINGS SHALL BE GALVANIZED AND PAINTED (EXCEPT POLE CLAMPS OR BANDS) TO MATCH THE BODY OF THE SIGNAL HEAD.

2.) THE SIGNAL HEAD BRACKET ARMS SHALL BE ATTACHED TO STEEL POLES BY ONE OF THE FOLLOWING METHODS:

A.) 1-1/2 INCHES (38 MILLIMETER) BLIND HALF COUPLING WELDED INTO THE POLE PRIOR TO GALVANIZING.
B.) BRACKET ARM HUB PLATES ATTACHED TO THE POLE AS PER NOTE 3.
C.) POLE CLAMP WITH THREADED HUB.

FIELD INSTALLATION OF THE WIRING HOLES FOR SIGNAL HEADS WILL BE PERMITTED PROVIDED THAT THE HOLES ARE DRILLED OR HOLE SAWN. NO TORCH CUTTING OR FIELD WELDING WILL BE PERMITTED. CUT SURFACES SHALL BE FILED SMOOTH AND COVERED WITH TWO COATS OF ZINC RICH PAINT. GROMMETS OR WIRING GUIDES SHALL BE INSTALLED IN THE HOLES.

3.) THE FOLLOWING MINIMUM SIZE FASTENERS SHALL BE USED FOR THE ATTACHMENT OF THE INDICTED HARDWARE TO STEEL POLES:

A.) CONDUIT BRACKET ARM HUB PLATES: 1/2 INCH (13 MILLIMETER) DIA. SCREW OF 3/4 INCH (19 MILLIMETER) WIDE PASSIVATED STAINLESS STEEL BAND (TWO FASTENERS OR BANDS PER HUB PLATE).
B.) CONDUIT: TWO HOLE CONDUIT STRAPS WITH 1/4 INCH (6.4 MILLIMETER) DIA. SCREWS OR 3/4 INCH (19 MILLIMETER) WIDE PASSIVATED STAINLESS STEEL BANDS.

THE SCREWS SHALL UTILIZE A DRILLED AND TAPPED HOLE OR BE THE SELF-TAPPING TYPE.

4.) ALL CONNECTIONS SHALL BE OF THE TRI-STUD DESIGN.

SUPPORT NO.	MAST ARM	L (FT.)	L1 (FT.)	L2 (FT.)	L3 (FT.)	P1 (FT.)	S1 (FT.)	S2 (FT.)	S3 (FT.)	ELEVATION A	ELEVATION B	LOCATION	STATION	OFFSET	MAST ARM A ANGLE (DEG.)	ORIENTATION ANGLES (DEG.) FROM MAST ARM A: MAST ARM B ANGLE (DEG.)	HANDHOLE	POWER SERVICE	DISCONNECT SWITCH	PEDESTRIAN SIGNAL HEADS
1	A	38	20	28	36	34	15	23	32	1067.26	1067.08	WALNUT	176+06	31' LT.	0	90	180	180	180	180, 270
	B	31	18	30		26	7	14	23		1066.44									
2	A	37	24	36		33	19	30		1067.43	1066.98	WALNUT	175+27	27' RT.	90		270	270	270	90, 180

HORIZONTAL SCALE IN FEET 0 10 20 40

CALCULATED HEH
CHECKED WLC

TRAFFIC SIGNAL PLAN
9TH STREET NE AND WALNUT AVENUE

WALNUT & CHERRY COMPLETE STREET BIKE LANES

CP 1

R:\Stark\SARTA\Task 3 Canton\STA\91592\signals\sheets\91592CP001.dgn 2/2/2012 4:37:06 PM jroth

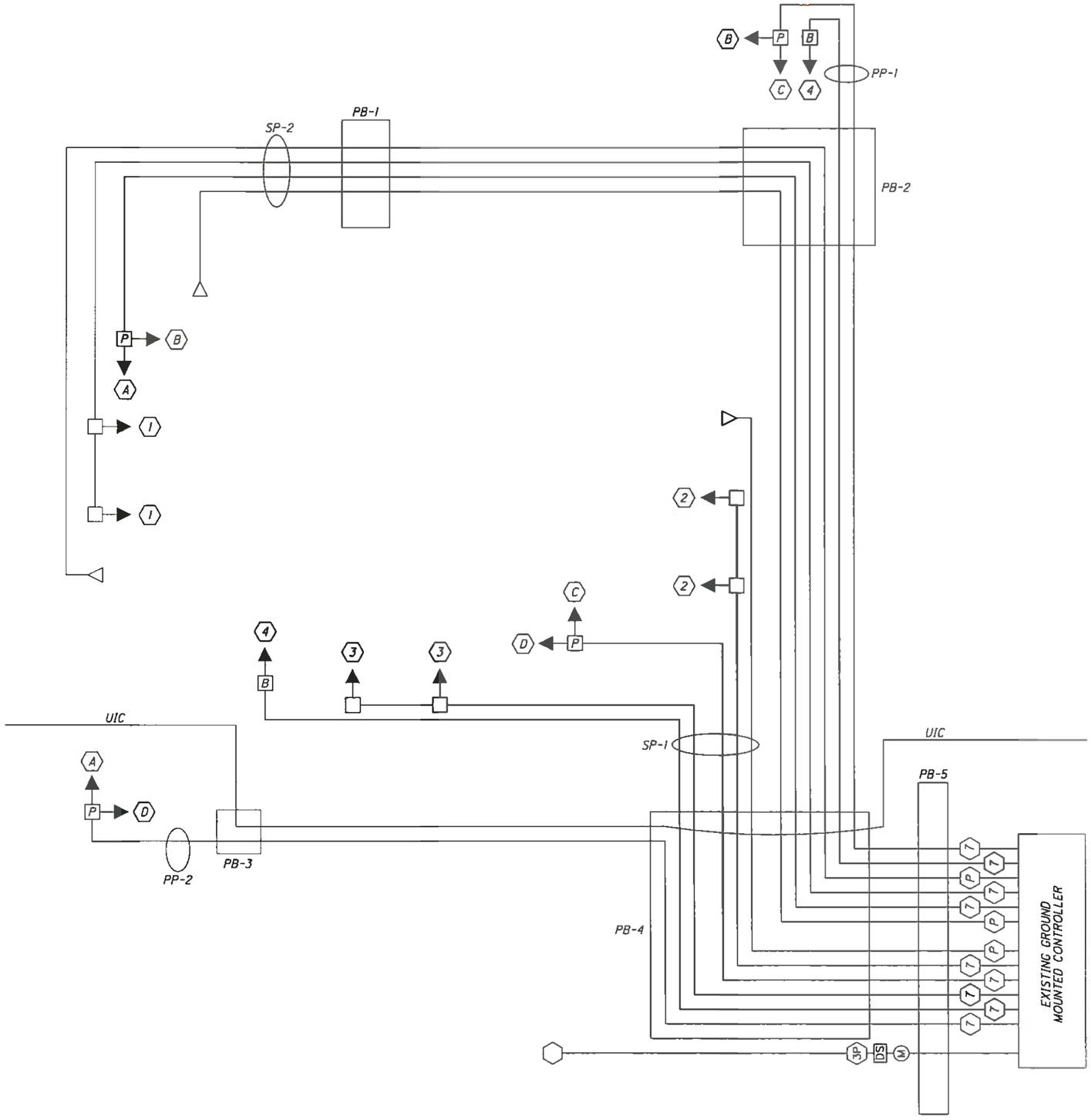

INTERVAL OR FEATURE		CONTROLLER MOVEMENT NO.							
INTERSECTION MOVEMENT		1	2	3	4	5	6	7	8
MINIMUM GREEN (INITIAL)	(SEC.)		5		10				10
MAXIMUM GREEN 1	(SEC.)		25		15				15
MAXIMUM GREEN 2	(SEC.)		35		10				10
EXTENSION	(SEC.)		4		4				4
YELLOW CHANGE	(SEC.)		3.1		3.1				3.1
ALL RED CLEARANCE	(SEC.)		2		2				2
WALK	(SEC.)		7		5				5
PEDESTRIAN CLEARANCE	(SEC.)		11		10				10
MAXIMUM RECALL	(ON/OFF)		ON		ON				ON
MINIMUM RECALL	(ON/OFF)								
PEDESTRIAN RECALL	(ON/OFF)		ON		ON				ON

*BICYCLE SIGNALS SHALL FOLLOW PEDESTRIAN SIGNAL PHASING AND TIMING

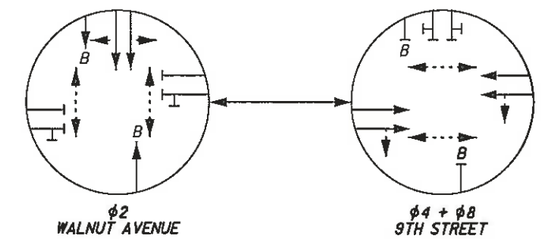

PREEMPT NOTES:
1. CHANNEL 1 SHALL PREEMPT TO SOUTHBOUND GREEN
2. CHANNEL 3 SHALL PREEMPT TO WESTBOUND GREEN
3. CHANNEL 4 SHALL PREEMPT TO EASTBOUND GREEN

LEGEND

- (2) LOOP DETECTOR LEAD-IN CABLE
- (7) SIGNAL CABLE, 7/C, #14 AWG
- (P) EMERGENCY PREEMPTION CABLES
- (V) VIDEO DETECTION CABLES
- (3P) POWER CABLE, 3/C, #10 AWG
- (UI) INTERCONNECT CABLE, 6 PAIR, #19 AWG, SOLID, REA (PE-39)
- PB PULL BOX
- V VENT
- LP LIGHT POLE
- PP PEDESTRIAN POLE
- SP SIGNAL POLE
- UIC UNDERGROUND INTERCONNECT CABLE
- EMH AMERICAN ELECTRIC POWER MANHOLE
- (DS) DISCONNECT SWITCH
- (M) ELECTRIC METER
- VEHICULAR SIGNAL HEAD
- BICYCLE SIGNAL HEAD
- PEDESTRIAN SIGNAL HEAD
- PEDESTRIAN PUSHBUTTON
- VIDEO DETECTION UNIT
- EMERGENCY PREEMPTION UNIT
- POLE
- LUMINAIRE
- SPLICE LOCATION
- EXISTING TO REMAIN
- PROPOSED/TO BE RELOCATED

HORIZONTAL SCALE IN FEET 0 10 20 40

CALCULATED HEH
CHECKED WLC

TRAFFIC SIGNAL DETAILS
9TH STREET NE AND WALNUT AVENUE

WALNUT & CHERRY COMPLETE STREET BIKE LANES

CP 2

R:\Stark\SARTA\Task 3 Canton\STA\91592\signals\sheets\91592CP002.dgn 2/2/2012 4:37:25 PM jroth

1 2
EXISTING SIGNAL HEADS TO BE RELOCATED

3
PROPOSED BICYCLE SIGNAL HEADS

A D
EXISTING PEDESTRIAN SIGNAL TO REMAIN IN PLACE

B C D
EXISTING PEDESTRIAN SIGNAL TO BE RELOCATED

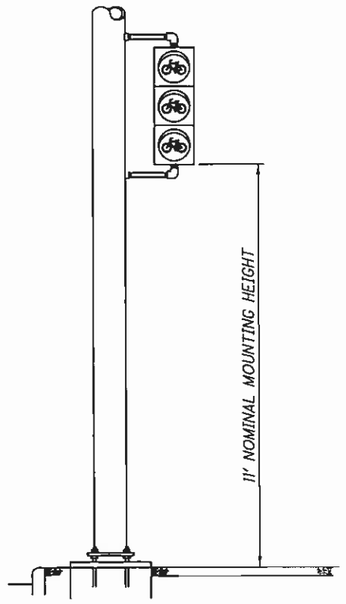

BICYCLE SIGNAL MOUNTING DETAIL
NOT TO SCALE

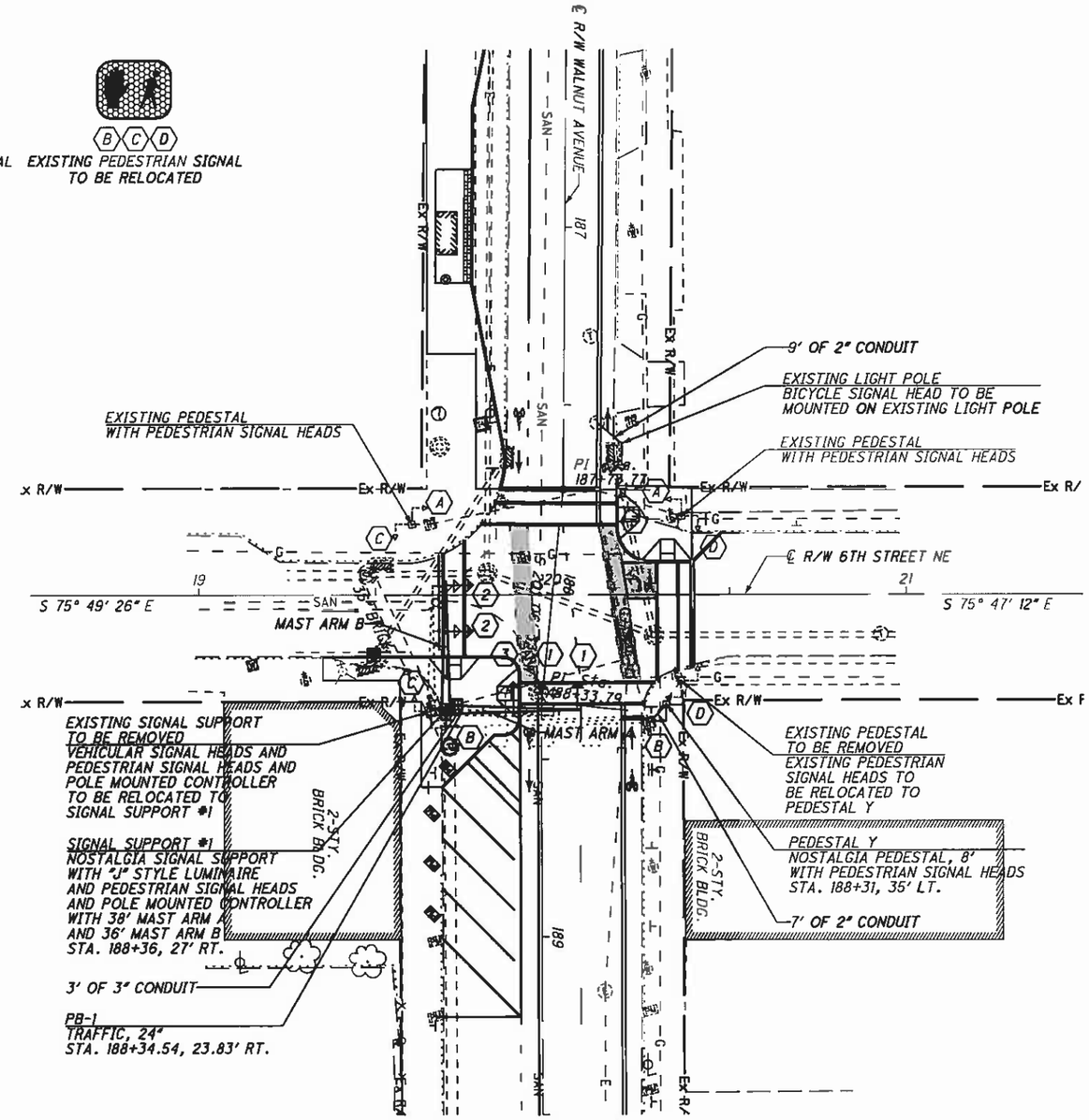

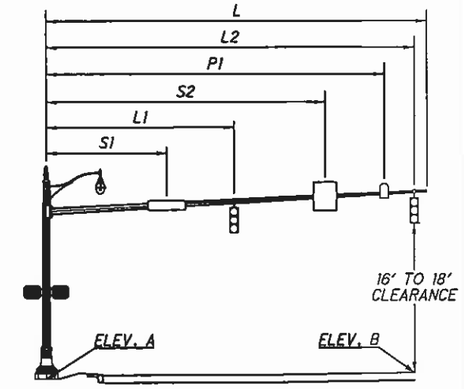

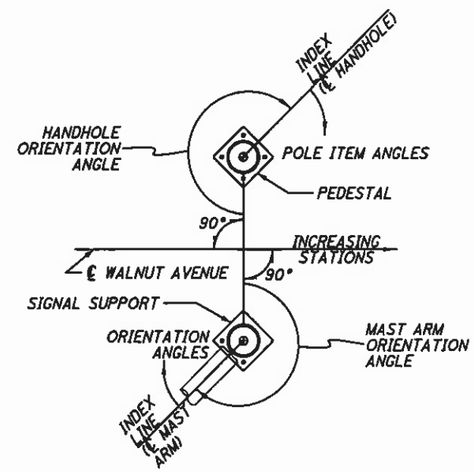

PEDESTAL CHART			
PEDESTAL NO.	PEDESTRIAN SIGNAL	PEDESTRIAN SIGNAL	HANDHOLE
Y	B 0	D 270	270

NOTES

1.) SIGNAL HEAD CONDUIT BRACKETS AND CONDUIT FITTINGS SHALL BE GALVANIZED AND PAINTED (EXCEPT POLE CLAMPS OR BANDS) TO MATCH THE BODY OF THE SIGNAL HEAD.

2.) THE SIGNAL HEAD BRACKET ARMS SHALL BE ATTACHED TO STEEL POLES BY ONE OF THE FOLLOWING METHODS:

A.) 1-1/2 INCHES (38 MILLIMETER) BLIND HALF COUPLING WELDED INTO THE POLE PRIOR TO GALVANIZING.
B.) BRACKET ARM HUB PLATES ATTACHED TO THE POLE AS PER NOTE 3.
C.) POLE CLAMP WITH THREADED HUB.

FIELD INSTALLATION OF THE WIRING HOLES FOR SIGNAL HEADS WILL BE PERMITTED PROVIDED THAT THE HOLES ARE DRILLED OR HOLE SAWN. NO TORCH CUTTING OR FIELD WELDING WILL BE PERMITTED. CUT SURFACES SHALL BE FILED SMOOTH AND COVERED WITH TWO COATS OF ZINC RICH PAINT. GROMMETS OR WIRING GUIDES SHALL BE INSTALLED IN THE HOLES.

3.) THE FOLLOWING MINIMUM SIZE FASTENERS SHALL BE USED FOR THE ATTACHMENT OF THE INDICTED HARDWARE TO STEEL POLES:

A.) CONDUIT BRACKET ARM HUB PLATES: 1/2 INCH (13 MILLIMETER) DIA. SCREW OF 3/4 INCH (19 MILLIMETER) WIDE PASSIVATED STAINLESS STEEL BAND (TWO FASTENERS OR BANDS PER HUB PLATE).
B.) CONDUIT: TWO HOLE CONDUIT STRAPS WITH 1/4 INCH (6.4 MILLIMETER) DIA. SCREWS OR 3/4 INCH (19 MILLIMETER) WIDE PASSIVATED STAINLESS STEEL BANDS.

THE SCREWS SHALL UTILIZE A DRILLED AND TAPPED HOLE OR BE THE SELF-TAPPING TYPE.

4.) ALL CONNECTIONS SHALL BE OF THE TRI-STUD DESIGN.

SUPPORT NO.	MAST ARM	L (FT.)	L1 (FT.)	L2 (FT.)	L3 (FT.)	P1 (FT.)	S1 (FT.)	S2 (FT.)	S3 (FT.)	ELEVATION A	ELEVATION B	LOCATION	STATION	OFFSET	MAST ARM A ANGLE (DEG.)	ORIENTATION ANGLES (DEG.) FROM MAST ARM A: MAST ARM B ANGLE (DEG.)	HANDHOLE	CONTROLLER	POWER SERVICE	DISCONNECT SWITCH	PEDESTRIAN SIGNAL HEADS
1	A	38	19	27	37	35	10	23	32	1042.22	1042.41	WALNUT	188+36	27' RT.	0	270	180	90	180	180	90, 180
	B	36	22	35		33	10	18	29		1042.84										

R:\Stark\SARTA\Task 3 Canton\STA\91592\signals\sheets\91592CP003.dgn 2/2/2012 4:37:48 PM jroth

CALCULATED HEH
CHECKED WLC

HORIZONTAL SCALE IN FEET 0 10 20 40

TRAFFIC SIGNAL PLAN
6TH STREET NE AND WALNUT AVENUE

WALNUT & CHERRY COMPLETE STREET BIKE LANES

CP 3

INTERVAL OR FEATURE		CONTROLLER MOVEMENT NO.							
INTERSECTION MOVEMENT		1	2	3	4	5	6	7	8
MINIMUM GREEN (INITIAL)	(SEC.)		5		5				
MAXIMUM GREEN 1	(SEC.)		60		30				
MAXIMUM GREEN 2	(SEC.)		60		30				
EXTENSION	(SEC.)								
YELLOW CHANGE	(SEC.)		3		3				
ALL RED CLEARANCE	(SEC.)		1.5		1.5				
WALK	(SEC.)		7		7				
PEDESTRIAN CLEARANCE	(SEC.)		10		10				
MAXIMUM RECALL	(ON/OFF)		ON		ON				
MINIMUM RECALL	(ON/OFF)								
PEDESTRIAN RECALL	(ON/OFF)		ON		ON				

*BICYCLE SIGNALS SHALL FOLLOW PEDESTRIAN SIGNAL PHASING AND TIMING

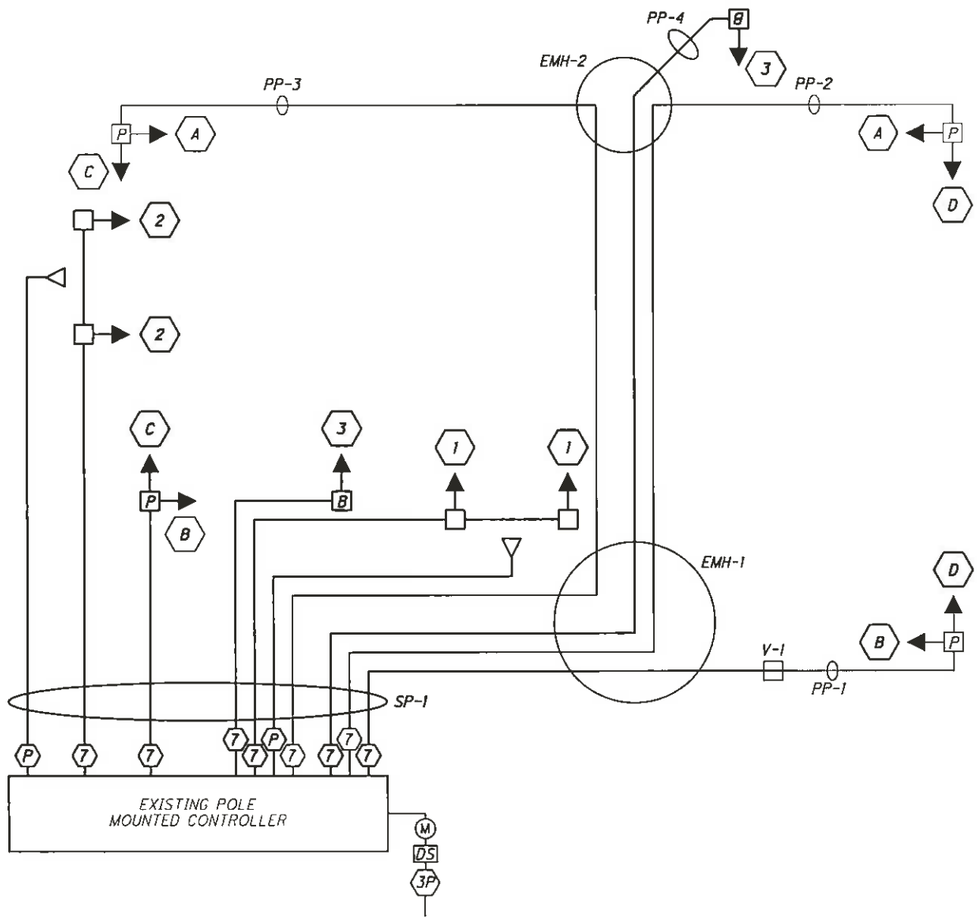

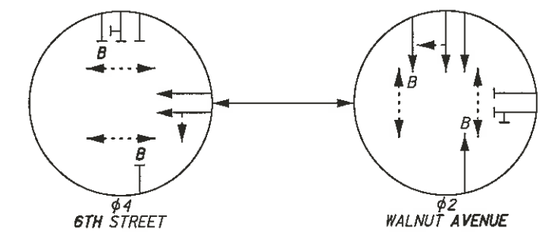

PREEMPT NOTES:
1. CHANNEL 1 SHALL PREEMPT TO SOUTHBOUND GREEN
2. CHANNEL 3 SHALL PREEMPT TO WESTBOUND GREEN

DETECTOR	SIZE	NO. OF TURNS	TYPE	DELAY OR EXTENSION (SEC.)	PHASE
6	6' X 6'	3	PULSE	-	SYS.
7	6' X 6'	3	PULSE	-	SYS.
8	6' X 6'	3	PULSE	-	SYS.

LEGEND

- 2 LOOP DETECTOR LEAD-IN CABLE
- 7 SIGNAL CABLE, 7/C, #14 AWG
- P EMERGENCY PREEMPTION CABLES
- V VIDEO DETECTION CABLES
- 3P POWER CABLE, 3/C, #10 AWG
- UI INTERCONNECT CABLE, 6 PAIR, #19 AWG, SOLID, REA (PE-39)
- PB PULL BOX
- V VENT
- LP LIGHT POLE
- PP PEDESTRIAN POLE
- SP SIGNAL POLE
- UIC UNDERGROUND INTERCONNECT CABLE
- EMH AMERICAN ELECTRIC POWER MANHOLE
- DS DISCONNECT SWITCH
- M ELECTRIC METER
- VEHICULAR SIGNAL HEAD
- B BICYCLE SIGNAL HEAD
- P PEDESTRIAN SIGNAL HEAD
- PEDESTRIAN PUSHBUTTON
- VIDEO DETECTION UNIT
- EMERGENCY PREEMPTION UNIT
- POLE
- LUMINAIRE
- SPLICE LOCATION
- EXISTING TO REMAIN
- PROPOSED/TO BE RELOCATED

HORIZONTAL SCALE IN FEET 0 10 20 40

CALCULATED HEH
CHECKED WLC

TRAFFIC SIGNAL DETAILS
6TH STREET NE AND WALNUE AVENUE

WALNUT & CHERRY
COMPLETE STREET
BIKE LANES

CP 4

R:\Stark\SARTA\Task 3 Canton\STA\91592\signals\91592CP004.dgn 2/2/2012 4:38:09 PM jroth

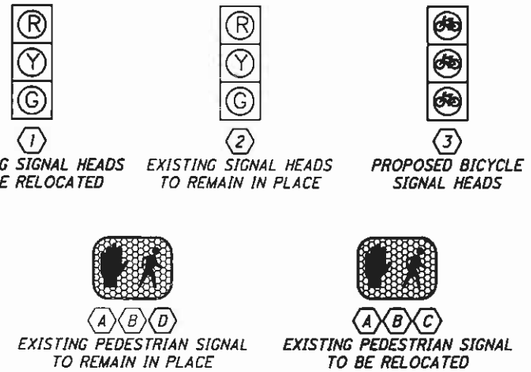

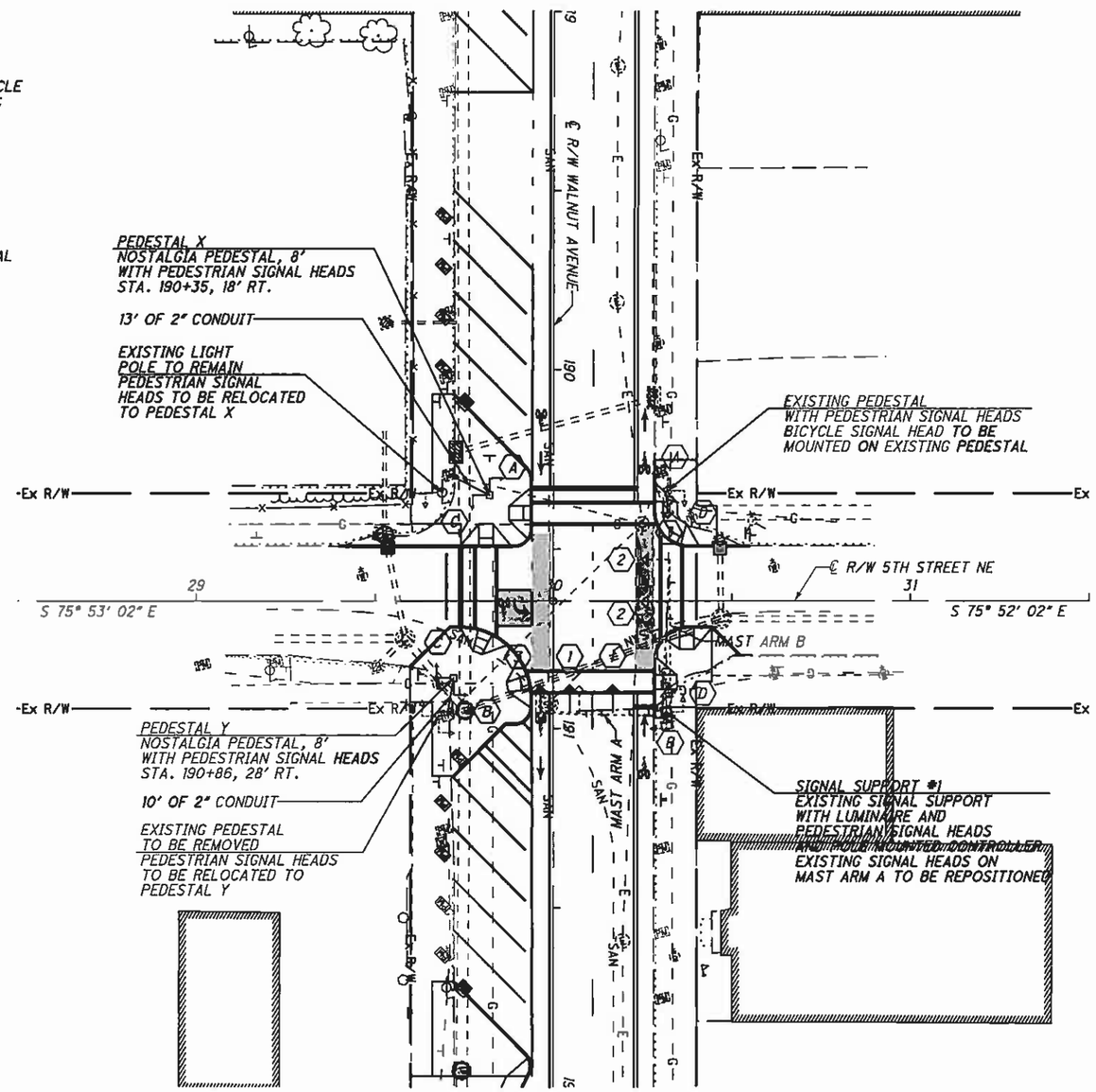

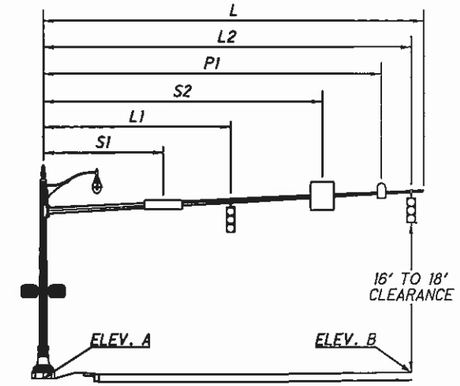

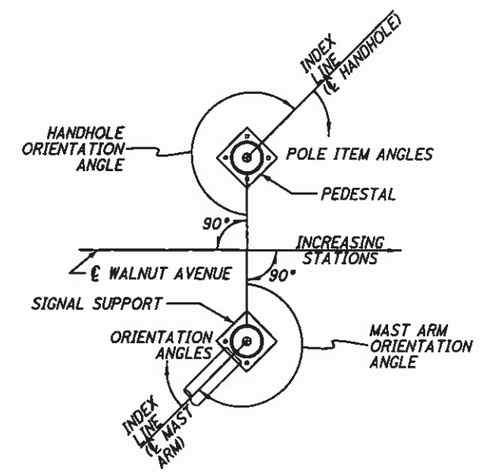

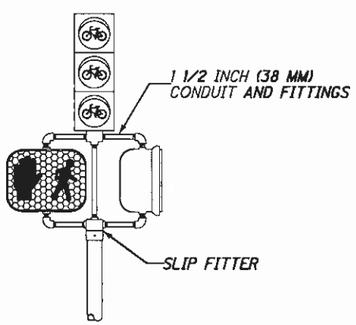

BICYCLE SIGNAL MOUNTING DETAIL
NOT TO SCALE

PEDESTAL CHART			
PEDESTAL NO.	PEDESTRIAN SIGNAL	PEDESTRIAN SIGNAL	HANDHOLE
X	A 90	C 0	180
Y	B 0	C 90	90

NOTES

1.) SIGNAL HEAD CONDUIT BRACKETS AND CONDUIT FITTINGS SHALL BE GALVANIZED AND PAINTED (EXCEPT POLE CLAMPS OR BANDS) TO MATCH THE BODY OF THE SIGNAL HEAD.

2.) BICYCLE SIGNAL HEAD SHALL BE MOUNTED USING BICYCLE SIGNAL POST TOP ASSEMBLY DESIGNED BY PELCO, INC.

3.) ALL CONNECTIONS SHALL BE OF THE TRI-STUD DESIGN.

SUPPORT NO.	MAST ARM	L (FT.)	L1 (FT.)	L2 (FT.)	L3 (FT.)	P1 (FT.)	S1 (FT.)	S2 (FT.)	S3 (FT.)	S4 (FT.)	ELEVATION A	ELEVATION B	LOCATION	STATION	OFFSET	MAST ARM A ANGLE (DEG.)	ORIENTATION ANGLES (DEG.) FROM MAST ARM A: MAST ARM B ANGLE (DEG.)	HANDHOLE	CONTROLLER	POWER SERVICE	DISCONNECT SWITCH	PEDESTRIAN SIGNAL HEADS
1	A	37	15	27	36	33	5	10	18	23	1039.24	1039.93	WALNUT	190+95	32' LT.	0	90	180	270	180	180	180, 270
	B	43	31	42		39	8	26	36			1039.65										

HORIZONTAL SCALE IN FEET 0 10 20 40

CALCULATED HEH
CHECKED WLC

TRAFFIC SIGNAL PLAN
5TH STREET NE AND WALNUT AVENUE

WALNUT & CHERRY COMPLETE STREET BIKE LANES

CP 5

R:\Stark\SARTA\Task 3 Canton\STA\91592\signals\sheets\91592CP005.dgn 2/2/2012 4:38:34 PM jroth

INTERVAL OR FEATURE		CONTROLLER MOVEMENT NO.							
INTERSECTION MOVEMENT		1	2	3	4	5	6	7	8
MINIMUM GREEN (INITIAL)	(SEC.)		5		5				
MAXIMUM GREEN 1	(SEC.)		60		30				
MAXIMUM GREEN 2	(SEC.)		60		30				
EXTENSION	(SEC.)								
YELLOW CHANGE	(SEC.)		3		3				
ALL RED CLEARANCE	(SEC.)		1.5		1.5				
WALK	(SEC.)		7		7				
PEDESTRIAN CLEARANCE	(SEC.)		10		10				
MAXIMUM RECALL	(ON/OFF)		ON		ON				
MINIMUM RECALL	(ON/OFF)								
PEDESTRIAN RECALL	(ON/OFF)		ON		ON				

*BICYCLE SIGNALS SHALL FOLLOW PEDESTRIAN SIGNAL PHASING AND TIMING

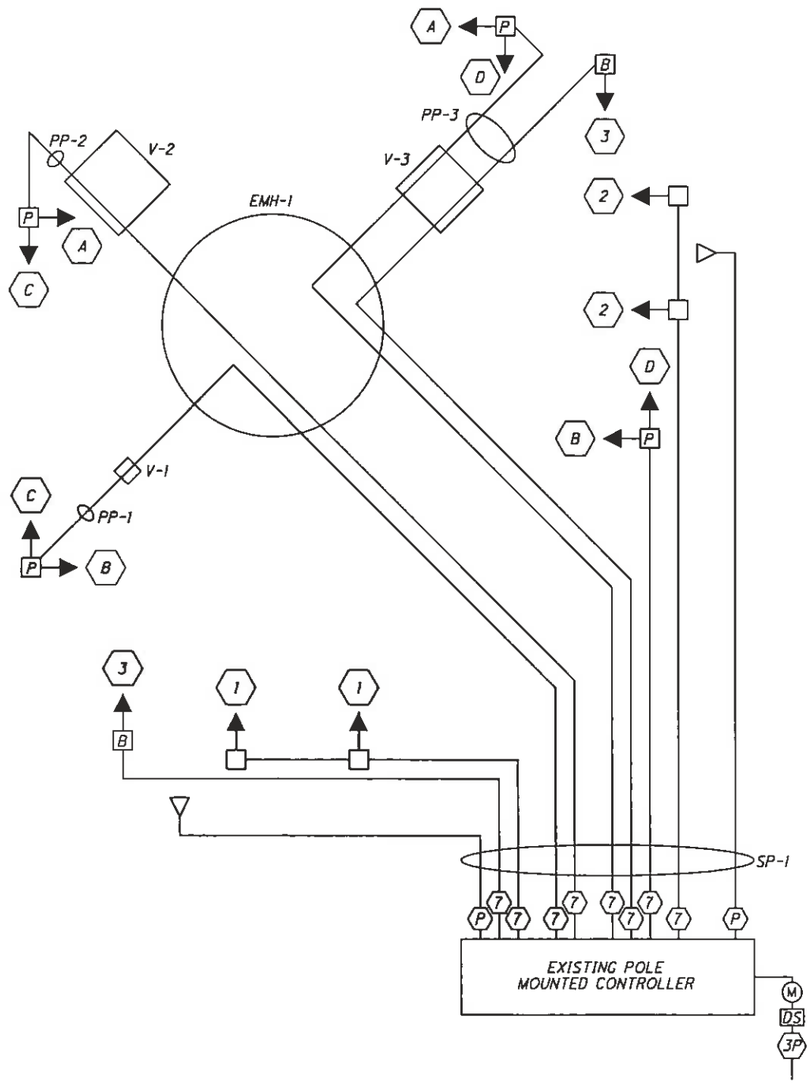

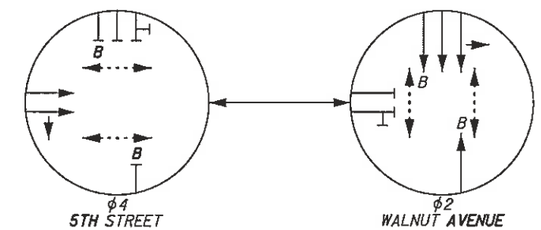

PREEMPT NOTES:
1. CHANNEL 1 SHALL PREEMPT TO SOUTHBOUND GREEN
2. CHANNEL 4 SHALL PREEMPT TO EASTBOUND GREEN

LEGEND

- (2) LOOP DETECTOR LEAD-IN CABLE
- (7) SIGNAL CABLE, 7/C, #14 AWG
- (P) EMERGENCY PREEMPTION CABLES
- (V) VIDEO DETECTION CABLES
- (3P) POWER CABLE, 3/C, #10 AWG
- (UI) INTERCONNECT CABLE, 6 PAIR, #19 AWG, SOLID, REA (PE-39)
- PB PULL BOX
- V VENT
- LP LIGHT POLE
- PP PEDESTRIAN POLE
- SP SIGNAL POLE
- UIC UNDERGROUND INTERCONNECT CABLE
- EMH AMERICAN ELECTRIC POWER MANHOLE
- DS DISCONNECT SWITCH
- M ELECTRIC METER
- VEHICULAR SIGNAL HEAD
- B BICYCLE SIGNAL HEAD
- P PEDESTRIAN SIGNAL HEAD
- PEDESTRIAN PUSHBUTTON
- VIDEO DETECTION UNIT
- EMERGENCY PREEMPTION UNIT
- POLE
- LUMINAIRE
- SPLICE LOCATION
- EXISTING TO REMAIN
- PROPOSED/TO BE RELOCATED

N

0 10 20 40
HORIZONTAL SCALE IN FEET

CALCULATED HEH
CHECKED WLC

TRAFFIC SIGNAL DETAILS
5TH STREET NE AND WALNUT AVENUE

WALNUT & CHERRY
COMPLETE STREET
BIKE LANES

CP 6

R:\Stark\SARTA\Task 3 Canton\STA\91592\signals\sheets\91592CP006.dgn 2/2/2012 4:38:52 PM jroth

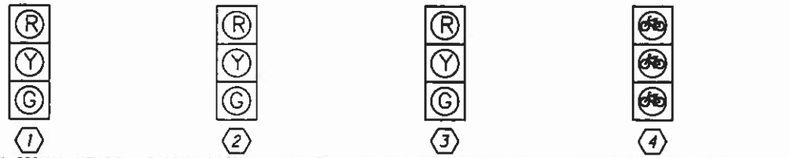

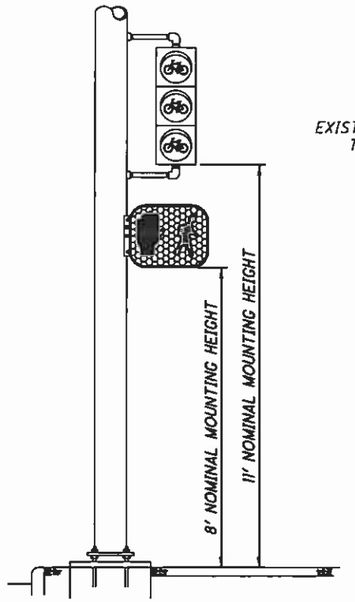

BICYCLE SIGNAL MOUNTING DETAIL
NOT TO SCALE

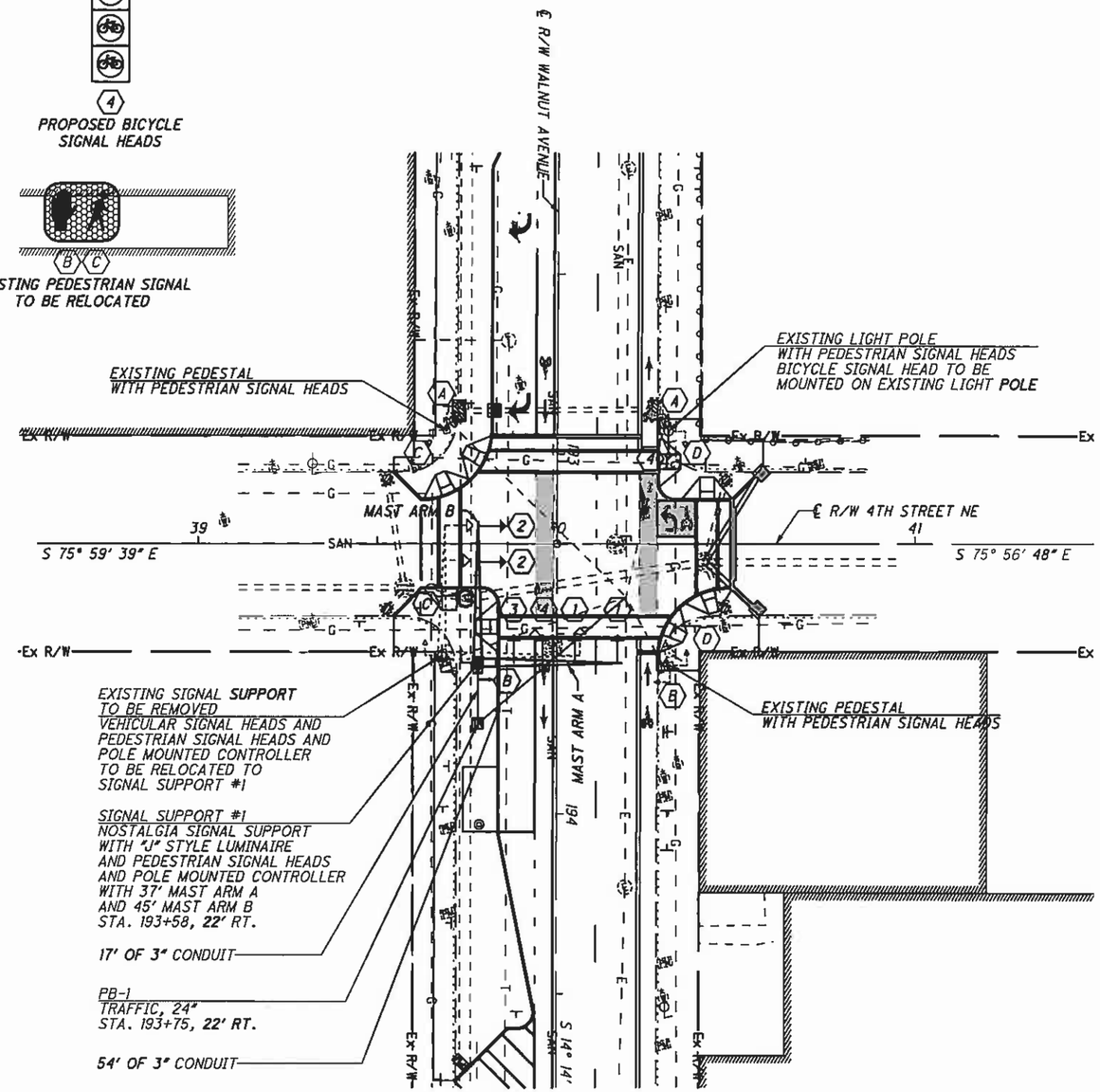

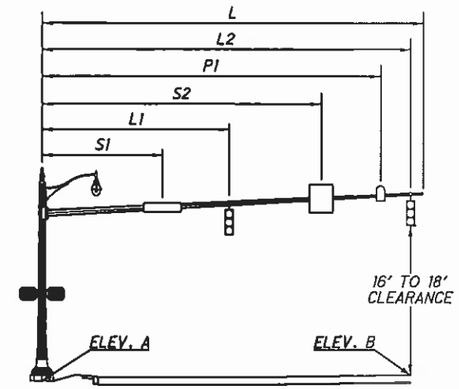

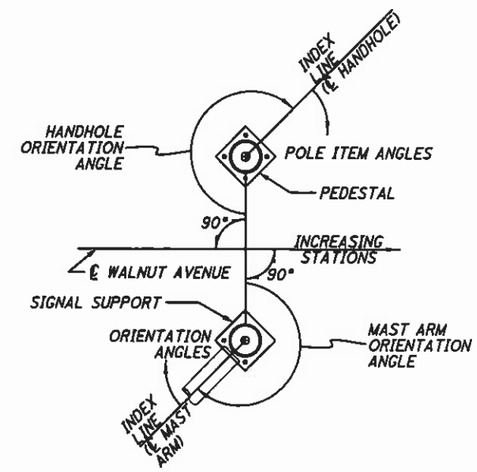

NOTES

1.) SIGNAL HEAD CONDUIT BRACKETS AND CONDUIT FITTINGS SHALL BE GALVANIZED AND PAINTED (EXCEPT POLE CLAMPS OR BANDS) TO MATCH THE BODY OF THE SIGNAL HEAD.

2.) THE SIGNAL HEAD BRACKET ARMS SHALL BE ATTACHED TO STEEL POLES BY ONE OF THE FOLLOWING METHODS:

A.) 1-1/2 INCHES (38 MILLIMETER) BLIND HALF COUPLING WELDED INTO THE POLE PRIOR TO GALVANIZING.
B.) BRACKET ARM HUB PLATES ATTACHED TO THE POLE AS PER NOTE 3.
C.) POLE CLAMP WITH THREADED HUB.

FIELD INSTALLATION OF THE WIRING HOLES FOR SIGNAL HEADS WILL BE PERMITTED PROVIDED THAT THE HOLES ARE DRILLED OR HOLE SAWN. NO TORCH CUTTING OR FIELD WELDING WILL BE PERMITTED. CUT SURFACES SHALL BE FILED SMOOTH AND COVERED WITH TWO COATS OF ZINC RICH PAINT. GROMMETS OR WIRING GUIDES SHALL BE INSTALLED IN THE HOLES.

3.) THE FOLLOWING MINIMUM SIZE FASTENERS SHALL BE USED FOR THE ATTACHMENT OF THE INDICTED HARDWARE TO STEEL POLES:

A.) CONDUIT BRACKET ARM HUB PLATES: 1/2 INCH (13 MILLIMETER) DIA. SCREW OF 3/4 INCH (19 MILLIMETER) WIDE PASSIVATED STAINLESS STEEL BAND (TWO FASTENERS OR BANDS PER HUB PLATE).
B.) CONDUIT: TWO HOLE CONDUIT STRAPS WITH 1/4 INCH (6.4 MILLIMETER) DIA. SCREWS OR 3/4 INCH (19 MILLIMETER) WIDE PASSIVATED STAINLESS STEEL BANDS.

THE SCREWS SHALL UTILIZE A DRILLED AND TAPPED HOLE OR BE THE SELF-TAPPING TYPE.

4.) ALL CONNECTIONS SHALL BE OF THE TRI-STUD DESIGN.

SUPPORT NO.	MAST ARM	L (FT.)	L1 (FT.)	L2 (FT.)	L3 (FT.)	L4 (FT.)	P1 (FT.)	S1 (FT.)	S2 (FT.)	S3 (FT.)	ELEVATION A	ELEVATION B	LOCATION	STATION	OFFSET	MAST ARM A ANGLE (DEG.)	ORIENTATION ANGLES (DEG.) FROM MAST ARM A: MAST ARM B ANGLE (DEG.)	HANDHOLE	CONTROLLER	POWER SERVICE	DISCONNECT SWITCH	PEDESTRIAN SIGNAL HEADS
1	A	40	10	18	27	39	37	5	33		1037.64	1037.77	WALNUT	193+58	22' RT.	0	270	180	90	180	180	90, 180
	B	39	28	38			36	15	24	33		1038.03										

HORIZONTAL SCALE IN FEET 0 10 20 40

CALCULATED HEH
CHECKED WLC

TRAFFIC SIGNAL PLAN
4TH STREET NE AND WALNUT AVENUE

WALNUT & CHERRY COMPLETE STREET BIKE LANES

CP 7

R:\Stark\SARTA\Task 3 Canton\STA\91592\signals\sheets\91592CP007.dgn 2/2/2012 4:39:15 PM jroth

INTERVAL OR FEATURE		CONTROLLER MOVEMENT NO.							
INTERSECTION MOVEMENT		1	2	3	4	5	6	7	8
MINIMUM GREEN (INITIAL)	(SEC.)		5		5				
MAXIMUM GREEN 1	(SEC.)		60		30				
MAXIMUM GREEN 2	(SEC.)		60		30				
EXTENSION	(SEC.)								
YELLOW CHANGE	(SEC.)		3		3				
ALL RED CLEARANCE	(SEC.)		1.5		1.5				
WALK	(SEC.)		7		7				
PEDESTRIAN CLEARANCE	(SEC.)		10		10				
MAXIMUM RECALL	(ON/OFF)		ON		ON				
MINIMUM RECALL	(ON/OFF)								
PEDESTRIAN RECALL	(ON/OFF)		ON		ON				

*BICYCLE SIGNALS SHALL FOLLOW PEDESTRIAN SIGNAL PHASING AND TIMING

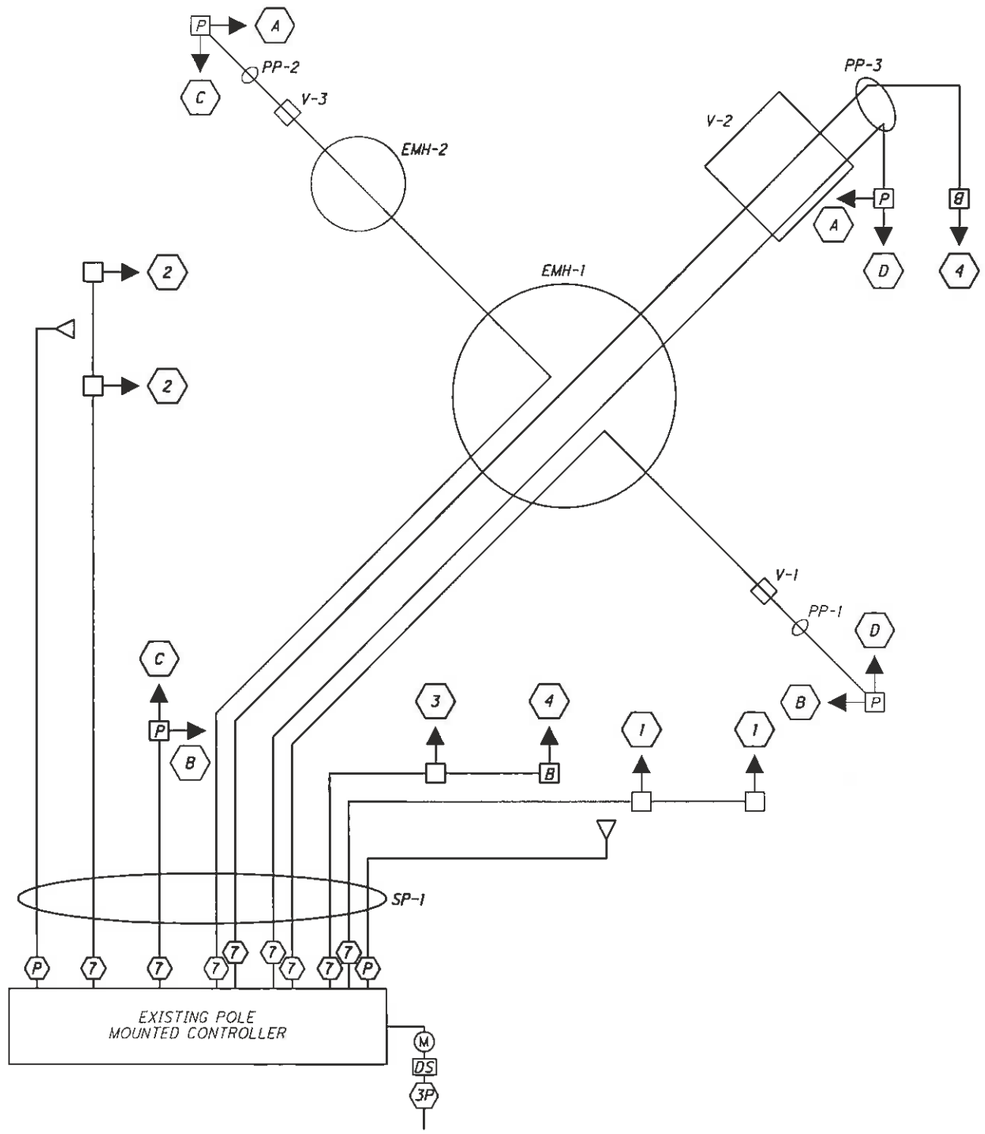

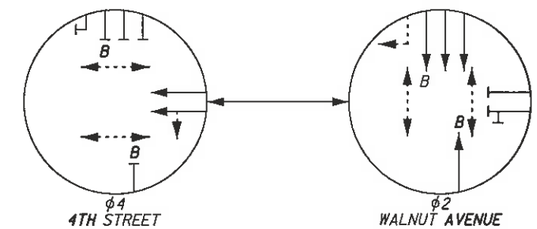

PREEMPT NOTES:
1. CHANNEL 1 SHALL PREEMPT TO SOUTHBOUND GREEN
2. CHANNEL 3 SHALL PREEMPT TO WESTBOUND GREEN

LEGEND

- (2) LOOP DETECTOR LEAD-IN CABLE
- (7) SIGNAL CABLE, 7/C, #14 AWG
- (P) EMERGENCY PREEMPTION CABLES
- (V) VIDEO DETECTION CABLES
- (3P) POWER CABLE, 3/C, #10 AWG
- (UI) INTERCONNECT CABLE, 6 PAIR, #19 AWG, SOLID, REA (PE-39)
- PB PULL BOX
- V VENT
- LP LIGHT POLE
- PP PEDESTRIAN POLE
- SP SIGNAL POLE
- UIC UNDERGROUND INTERCONNECT CABLE
- EMH AMERICAN ELECTRIC POWER MANHOLE
- DS DISCONNECT SWITCH
- (M) ELECTRIC METER
- VEHICULAR SIGNAL HEAD
- B BICYCLE SIGNAL HEAD
- P PEDESTRIAN SIGNAL HEAD
- PEDESTRIAN PUSHBUTTON
- VIDEO DETECTION UNIT
- EMERGENCY PREEMPTION UNIT
- POLE
- LUMINAIRE
- SPLICE LOCATION
- EXISTING TO REMAIN
- PROPOSED/TO BE RELOCATED

HORIZONTAL SCALE IN FEET 0 10 20 40

CALCULATED HEH
CHECKED WLC

TRAFFIC SIGNAL DETAILS
4TH STREET NE AND WALNUT AVENUE

WALNUT & CHERRY
COMPLETE STREET
BIKE LANES

CP 8

R:\Stark\SARTA\Task 3 Canton\STA\91592\signals\sheets\91592CP008.dgn 2/2/2012 4:39:37 PM jroth

1
EXISTING SIGNAL HEADS TO BE RELOCATED

2
EXISTING SIGNAL HEADS TO REMAIN IN PLACE

3
PROPOSED BICYCLE SIGNAL HEADS

A B D
EXISTING PEDESTRIAN SIGNAL TO REMAIN IN PLACE

A B C
EXISTING PEDESTRIAN SIGNAL TO BE RELOCATED

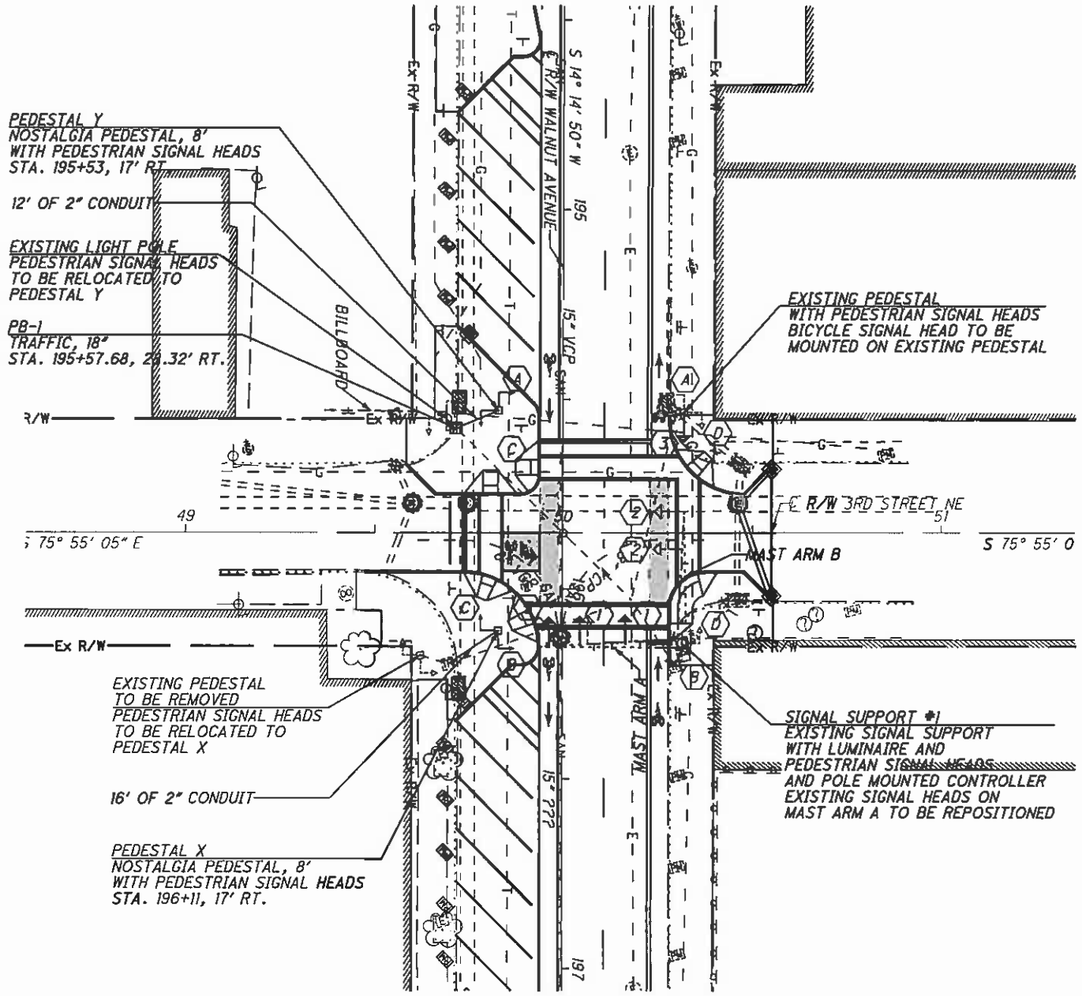

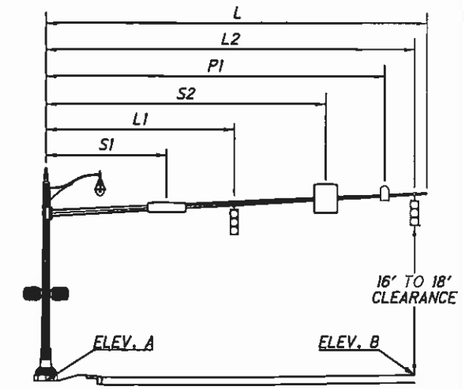

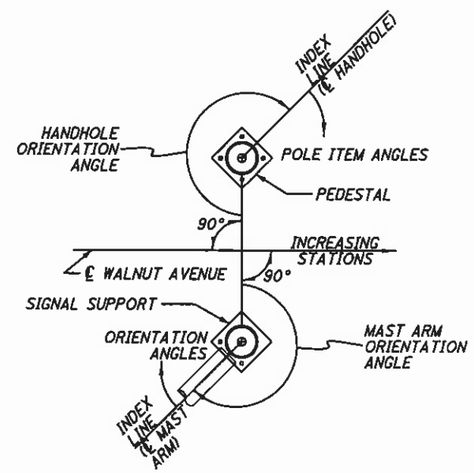

PEDESTAL CHART			
PEDESTAL NO.	PEDESTRIAN SIGNAL	PEDESTRIAN SIGNAL	HANDHOLE
X	C 90	D 0	90
Y	A 90	C 0	180

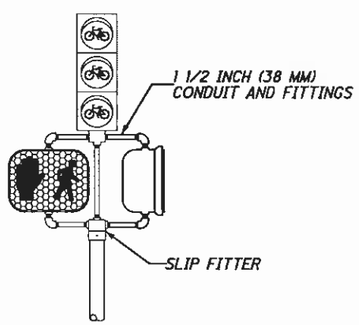

BICYCLE SIGNAL MOUNTING DETAIL
NOT TO SCALE

NOTES

1.) SIGNAL HEAD CONDUIT BRACKETS AND CONDUIT FITTINGS SHALL BE GALVANIZED AND PAINTED (EXCEPT POLE CLAMPS OR BANDS) TO MATCH THE BODY OF THE SIGNAL HEAD.

2.) BICYCLE SIGNAL HEAD SHALL BE MOUNTED USING BICYCLE SIGNAL POST TOP ASSEMBLY DESIGNED BY PELCO, INC.

3.) ALL CONNECTIONS SHALL BE OF THE TRI-STUD DESIGN.

SUPPORT NO.	MAST ARM	L (FT.)	L1 (FT.)	L2 (FT.)	L3 (FT.)	P1 (FT.)	S1 (FT.)	S2 (FT.)	S3 (FT.)	S4 (FT.)	ELEVATION A	ELEVATION B	LOCATION	STATION	OFFSET	MAST ARM A ANGLE (DEG.)	ORIENTATION ANGLES (DEG.) FROM MAST ARM A: MAST ARM B ANGLE (DEG.)	HANDHOLE	CONTROLLER	POWER SERVICE	DISCONNECT SWITCH	PEDESTRIAN SIGNAL HEADS
1	A	38	15	27	35	33	5	11	18	23	1036.73	1037.36	WALNUT	196+14	32' LT.	0	90	180	270	180	180	180, 270
	B	36	25	35		32	13	21	29			1037.11										

HORIZONTAL SCALE IN FEET 0 10 20 40

CALCULATED HEH
CHECKED WLC

TRAFFIC SIGNAL PLAN
3RD STREET NE AND WALNUT AVENUE

WALNUT & CHERRY COMPLETE STREET BIKE LANES

CP 9

R:\Stark\SARTA\Task 3 Canton\STA\91592\signals\sheets\91592CP009.dgn 2/2/2012 4:40:13 PM jroth

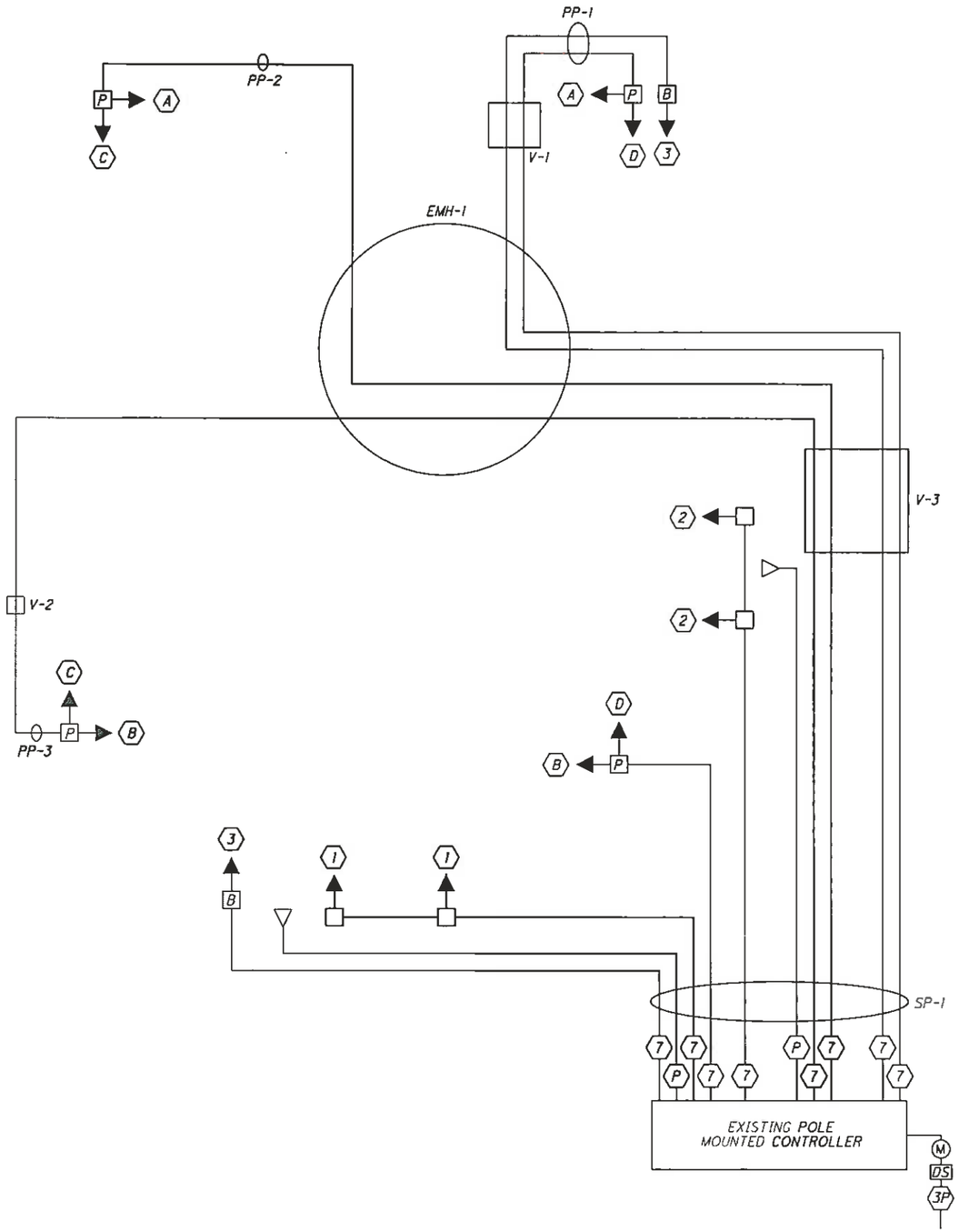

INTERVAL OR FEATURE		CONTROLLER MOVEMENT NO.							
INTERSECTION MOVEMENT		1	2	3	4	5	6	7	8
MINIMUM GREEN (INITIAL)	(SEC.)		5		5				
MAXIMUM GREEN I	(SEC.)		60		30				
MAXIMUM GREEN II	(SEC.)		60		30				
EXTENSION	(SEC.)								
YELLOW CHANGE	(SEC.)		3		3				
ALL RED CLEARANCE	(SEC.)		1.5		1.5				
WALK	(SEC.)		7		7				
PEDESTRIAN CLEARANCE	(SEC.)		10		10				
MAXIMUM RECALL	(ON/OFF)		ON		ON				
MINIMUM RECALL	(ON/OFF)								
PEDESTRIAN RECALL	(ON/OFF)		ON		ON				

*BICYCLE SIGNALS SHALL FOLLOW PEDESTRIAN SIGNAL PHASING AND TIMING

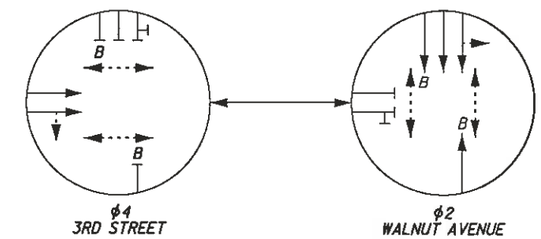

PREEMPT NOTES:
1. CHANNEL 1 SHALL PREEMPT TO SOUTHBOUND GREEN
2. CHANNEL 3 SHALL PREEMPT TO EASTBOUND GREEN

LEGEND

- (2) LOOP DETECTOR LEAD-IN CABLE
- (7) SIGNAL CABLE, 7/C, #14 AWG
- (P) EMERGENCY PREEMPTION CABLES
- (V) VIDEO DETECTION CABLES
- (3P) POWER CABLE, 3/C, #10 AWG
- (UI) INTERCONNECT CABLE, 6 PAIR, #19 AWG, SOLID, REA (PE-39)
- PB PULL BOX
- V VENT
- LP LIGHT POLE
- PP PEDESTRIAN POLE
- SP SIGNAL POLE
- UIC UNDERGROUND INTERCONNECT CABLE
- EMH AMERICAN ELECTRIC POWER MANHOLE
- DS DISCONNECT SWITCH
- (M) ELECTRIC METER
- VEHICULAR SIGNAL HEAD
- B BICYCLE SIGNAL HEAD
- P PEDESTRIAN SIGNAL HEAD
- PEDESTRIAN PUSHBUTTON
- VIDEO DETECTION UNIT
- EMERGENCY PREEMPTION UNIT
- POLE
- LUMINAIRE
- SPLICE LOCATION
- EXISTING TO REMAIN
- PROPOSED/TO BE RELOCATED

N

HORIZONTAL SCALE IN FEET 0 10 20 40

CALCULATED HEH
CHECKED WLC

TRAFFIC SIGNAL DETAILS
3RD STREET NE AND WALNUT AVENUE

WALNUT & CHERRY
COMPLETE STREET
BIKE LANES

CP 10

R:\Stark\SARTA\Task 3 Canton\STA\91592\signals\sheets\91592CP010.dgn 2/2/2012 4:40:57 PM jroth

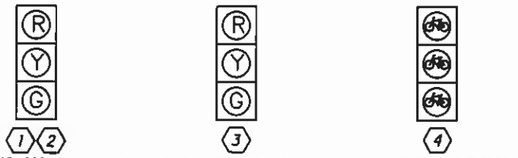

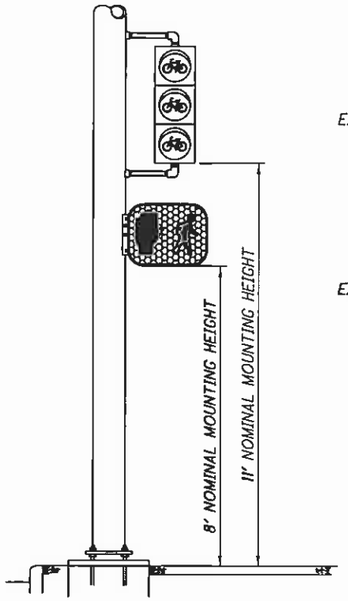

BICYCLE SIGNAL MOUNTING DETAIL
NOT TO SCALE

EXISTING PEDESTRIAN SIGNAL TO REMAIN IN PLACE

EXISTING PEDESTRIAN SIGNAL TO BE RELOCATED

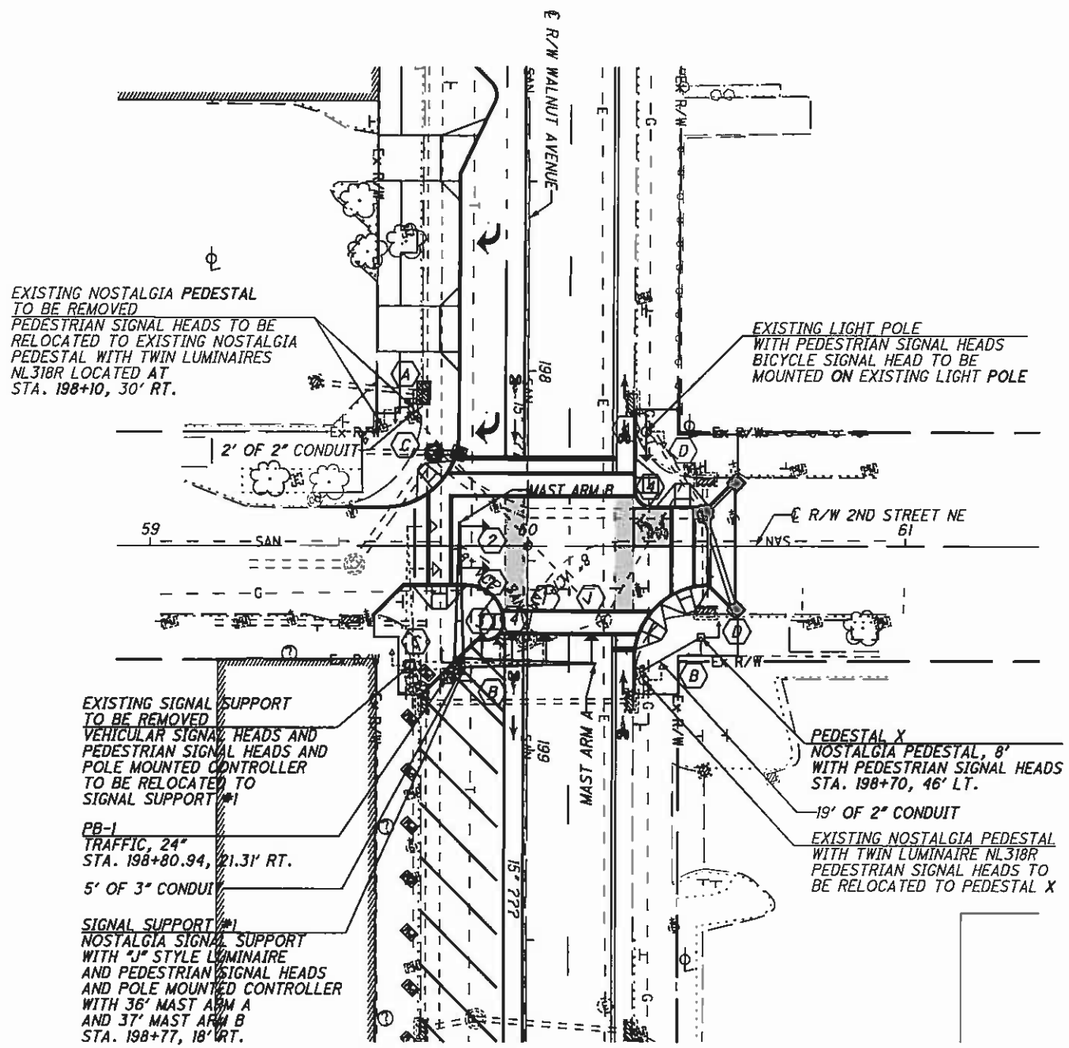

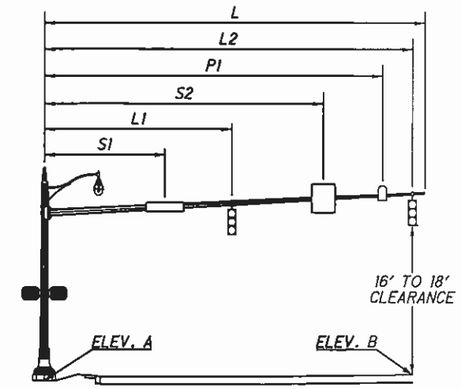

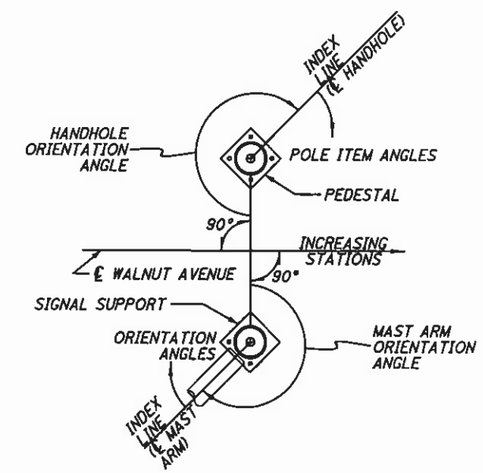

PEDESTAL CHART			
PEDESTAL NO.	PEDESTRIAN SIGNAL	PEDESTRIAN SIGNAL	HANDHOLE
X	B 90	D 0	180

NOTES

1.) SIGNAL HEAD CONDUIT BRACKETS AND CONDUIT FITTINGS SHALL BE GALVANIZED AND PAINTED (EXCEPT POLE CLAMPS OR BANDS) TO MATCH THE BODY OF THE SIGNAL HEAD.

2.) THE SIGNAL HEAD BRACKET ARMS SHALL BE ATTACHED TO STEEL POLES BY ONE OF THE FOLLOWING METHODS:

A.) 1-1/2 INCHES (38 MILLIMETER) BLIND HALF COUPLING WELDED INTO THE POLE PRIOR TO GALVANIZING.
B.) BRACKET ARM HUB PLATES ATTACHED TO THE POLE AS PER NOTE 3.
C.) POLE CLAMP WITH THREADED HUB.

FIELD INSTALLATION OF THE WIRING HOLES FOR SIGNAL HEADS WILL BE PERMITTED PROVIDED THAT THE HOLES ARE DRILLED OR HOLE SAWN. NO TORCH CUTTING OR FIELD WELDING WILL BE PERMITTED. CUT SURFACES SHALL BE FILED SMOOTH AND COVERED WITH TWO COATS OF ZINC RICH PAINT. GROMMETS OR WIRING GUIDES SHALL BE INSTALLED IN THE HOLES.

3.) THE FOLLOWING MINIMUM SIZE FASTENERS SHALL BE USED FOR THE ATTACHMENT OF THE INDICTED HARDWARE TO STEEL POLES:

A.) CONDUIT BRACKET ARM HUB PLATES: 1/2 INCH (13 MILLIMETER) DIA. SCREW OF 3/4 INCH (19 MILLIMETER) WIDE PASSIVATED STAINLESS STEEL BAND (TWO FASTENERS OR BANDS PER HUB PLATE).
B.) CONDUIT: TWO HOLE CONDUIT STRAPS WITH 1/4 INCH (6.4 MILLIMETER) DIA. SCREWS OR 3/4 INCH (19 MILLIMETER) WIDE PASSIVATED STAINLESS STEEL BANDS.

THE SCREWS SHALL UTILIZE A DRILLED AND TAPPED HOLE OR BE THE SELF-TAPPING TYPE.

4.) ALL CONNECTIONS SHALL BE OF THE TRI-STUD DESIGN.

SUPPORT NO.	MAST ARM	L (FT.)	L1 (FT.)	L2 (FT.)	L3 (FT.)	L4 (FT.)	P1 (FT.)	S1 (FT.)	S2 (FT.)	S3 (FT.)	ELEVATION A	ELEVATION B	LOCATION	STATION	OFFSET	MAST ARM A ANGLE (DEG.)	ORIENTATION ANGLES (DEG.) FROM MAST ARM A: MAST ARM B ANGLE (DEG.)	HANDHOLE	CONTROLLER	POWER SERVICE	DISCONNECT SWITCH	PEDESTRIAN SIGNAL HEADS
1	A	36	6	14	23	35	33	18.5	29		1036.65	1036.65	WALNUT	198+77	18' RT.	0	270	180	90	180	180	90, 180
	B	37	25	36			34	11	21	30		1036.61										

CALCULATED HEH
CHECKED WLC

HORIZONTAL SCALE IN FEET 0 10 20 40

TRAFFIC SIGNAL PLAN
2ND STREET NE AND WALNUT AVENUE

WALNUT & CHERRY COMPLETE STREET BIKE LANES

CP 11

R:\Stark\SART\Task 3 Canton\STA\91592\signals\sheets\91592CP011.dgn 2/2/2012 4:41:21 PM jroth

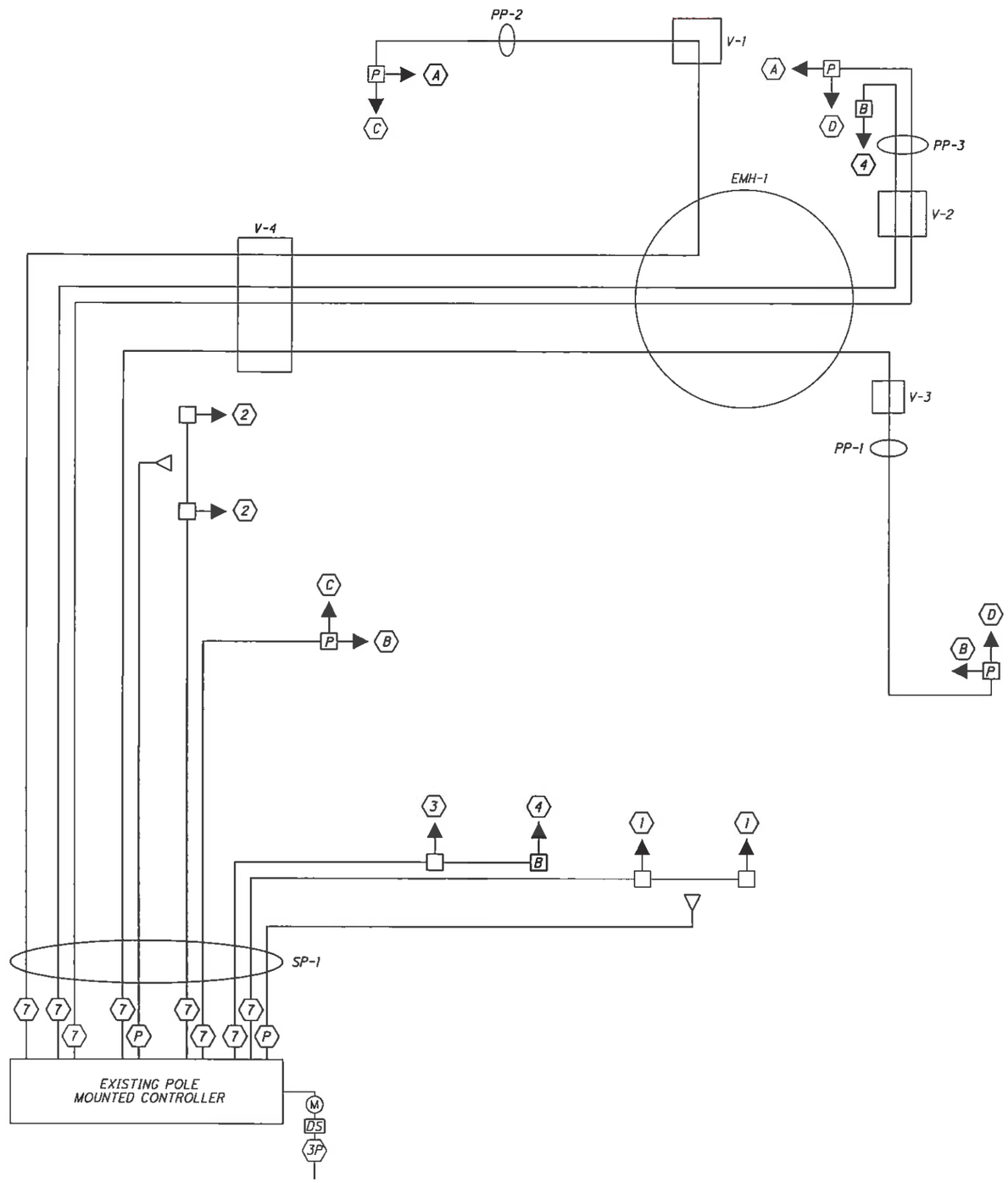

INTERVAL OR FEATURE		CONTROLLER MOVEMENT NO.							
INTERSECTION MOVEMENT		1	2	3	4	5	6	7	8
MINIMUM GREEN (INITIAL)	(SEC.)		5		5				
MAXIMUM GREEN I	(SEC.)		60		30				
MAXIMUM GREEN II	(SEC.)		60		30				
EXTENSION	(SEC.)								
YELLOW CHANGE	(SEC.)		3		3				
ALL RED CLEARANCE	(SEC.)		1.5		1.5				
WALK	(SEC.)		7		7				
PEDESTRIAN CLEARANCE	(SEC.)		10		10				
MAXIMUM RECALL	(ON/OFF)		ON		ON				
MINIMUM RECALL	(ON/OFF)								
PEDESTRIAN RECALL	(ON/OFF)		ON		ON				

*BICYCLE SIGNALS SHALL FOLLOW PEDESTRIAN SIGNAL PHASING AND TIMING

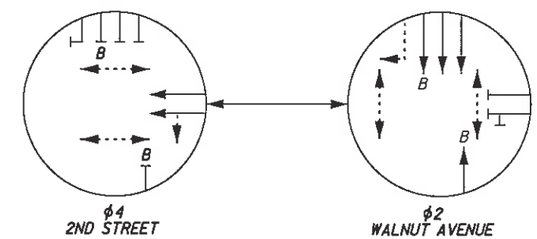

PREEMPT NOTES:

1. CHANNEL 1 SHALL PREEMPT TO SOUTHBOUND GREEN
2. CHANNEL 3 SHALL PREEMPT TO WESTBOUND GREEN

LEGEND

- (2) LOOP DETECTOR LEAD-IN CABLE
- (7) SIGNAL CABLE, 7/C, #14 AWG
- (P) EMERGENCY PREEMPTION CABLES
- (V) VIDEO DETECTION CABLES
- (3P) POWER CABLE, 3/C, #10 AWG
- (UI) INTERCONNECT CABLE, 6 PAIR, #19 AWG, SOLID, REA (PE-39)
- PB PULL BOX
- V VENT
- LP LIGHT POLE
- PP PEDESTRIAN POLE
- SP SIGNAL POLE
- UIC UNDERGROUND INTERCONNECT CABLE
- EMH AMERICAN ELECTRIC POWER MANHOLE
- DS DISCONNECT SWITCH
- (M) ELECTRIC METER
- VEHICULAR SIGNAL HEAD
- B BICYCLE SIGNAL HEAD
- P PEDESTRIAN SIGNAL HEAD
- PEDESTRIAN PUSHBUTTON
- VIDEO DETECTION UNIT
- EMERGENCY PREEMPTION UNIT
- POLE
- LUMINAIRE
- SPLICE LOCATION
- EXISTING TO REMAIN
- PROPOSED/TO BE RELOCATED

HORIZONTAL SCALE IN FEET 0 10 20 40

CALCULATED HEH
CHECKED WLC

TRAFFIC SIGNAL DETAILS
2ND STREET NE AND WALNUT AVENUE

WALNUT & CHERRY
COMPLETE STREET
BIKE LANES

CP 12

R:\Stark\SARTA\Task 3 Canton\STA\91592\signals\sheets\91592CP012.dgn 2/2/2012 4:41:38 PM jroth

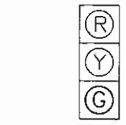

EXISTING SIGNAL HEADS TO REMAIN IN PLACE

EXISTING SIGNAL HEADS TO BE RELOCATED

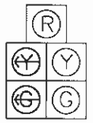

EXISTING SIGNAL HEADS TO REMAIN IN PLACE

EXISTING PEDESTRIAN SIGNAL TO REMAIN IN PLACE

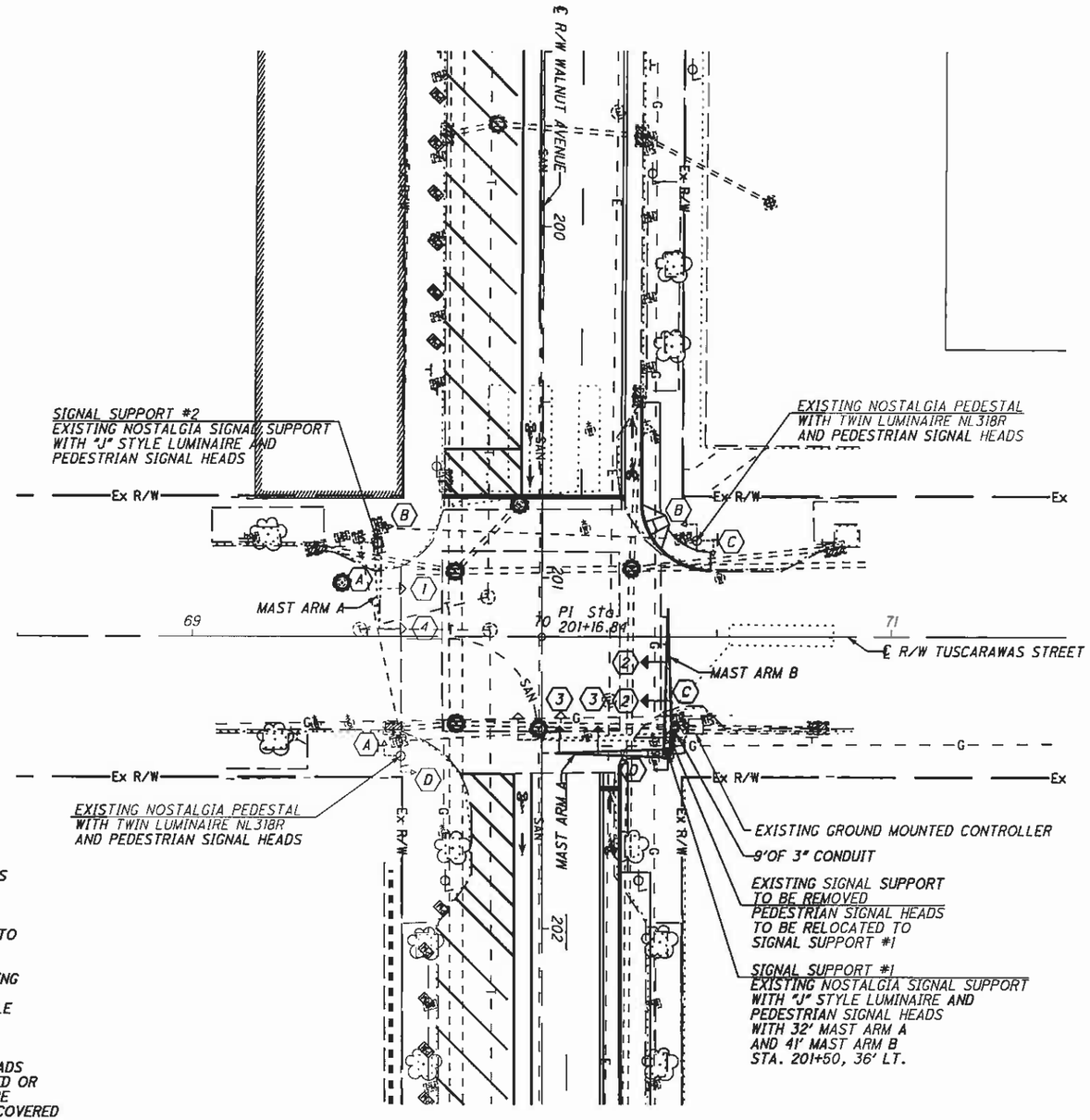

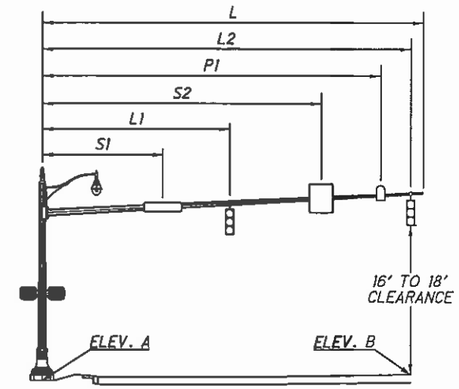

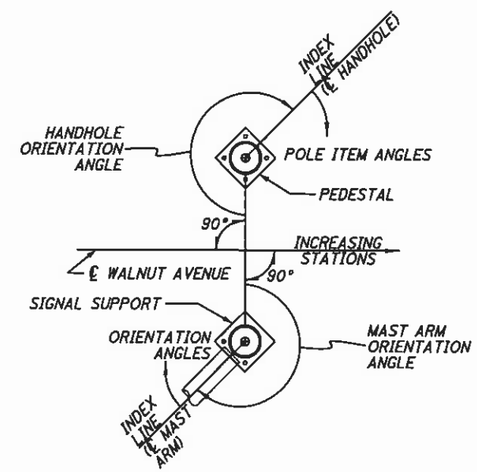

NOTES

1.) SIGNAL HEAD CONDUIT BRACKETS AND CONDUIT FITTINGS SHALL BE GALVANIZED AND PAINTED (EXCEPT POLE CLAMPS OR BANDS) TO MATCH THE BODY OF THE SIGNAL HEAD.

2.) THE SIGNAL HEAD BRACKET ARMS SHALL BE ATTACHED TO STEEL POLES BY ONE OF THE FOLLOWING METHODS:

A.) 1-1/2 INCHES (38 MILLIMETER) BLIND HALF COUPLING WELDED INTO THE POLE PRIOR TO GALVANIZING.
B.) BRACKET ARM HUB PLATES ATTACHED TO THE POLE AS PER NOTE 3.
C.) POLE CLAMP WITH THREADED HUB.

FIELD INSTALLATION OF THE WIRING HOLES FOR SIGNAL HEADS WILL BE PERMITTED PROVIDED THAT THE HOLES ARE DRILLED OR HOLE SAWN. NO TORCH CUTTING OR FIELD WELDING WILL BE PERMITTED. CUT SURFACES SHALL BE FILED SMOOTH AND COVERED WITH TWO COATS OF ZINC RICH PAINT. GROMMETS OR WIRING GUIDES SHALL BE INSTALLED IN THE HOLES.

3.) THE FOLLOWING MINIMUM SIZE FASTENERS SHALL BE USED FOR THE ATTACHMENT OF THE INDICTED HARDWARE TO STEEL POLES:

A.) CONDUIT BRACKET ARM HUB PLATES: 1/2 INCH (13 MILLIMETER) DIA. SCREW OF 3/4 INCH (19 MILLIMETER) WIDE PASSIVATED STAINLESS STEEL BAND (TWO FASTENERS OR BANDS PER HUB PLATE).
B.) CONDUIT: TWO HOLE CONDUIT STRAPS WITH 1/4 INCH (6.4 MILLIMETER) DIA. SCREWS OR 3/4 INCH (19 MILLIMETER) WIDE PASSIVATED STAINLESS STEEL BANDS.

THE SCREWS SHALL UTILIZE A DRILLED AND TAPPED HOLE OR BE THE SELF-TAPPING TYPE.

4.) ALL CONNECTIONS SHALL BE OF THE TRI-STUD DESIGN.

SUPPORT NO.	MAST ARM	L (FT.)	L1 (FT.)	L2 (FT.)	P1 (FT.)	S1 (FT.)	S2 (FT.)	S3 (FT.)	ELEVATION A	ELEVATION B	LOCATION	STATION	OFFSET	MAST ARM A ANGLE (DEG.)	ORIENTATION ANGLES (DEG.) FROM MAST ARM A: MAST ARM B ANGLE (DEG.)	HANDHOLE	POWER SERVICE	DISCONNECT SWITCH	PEDESTRIAN SIGNAL HEADS
1	A	32	20	31	29	6	13		1037.41	1036.88	WALNUT	201+50	36' LT.	0	90	180	180	180	180, 270
	B	41	15	26	35	10	30	40		1037.20									
2	A	26	13	25	23	8	18		1037.47	1037.47	WALNUT	200+90	47' RT.	90		270	270	270	90, 180

HORIZONTAL SCALE IN FEET 0 10 20 40

CALCULATED HEH
CHECKED WLC

TRAFFIC SIGNAL PLAN
TUSCARAWAS STREET AND WALNUT AVENUE

WALNUT & CHERRY COMPLETE STREET BIKE LANES

CP 13

R:\Stark\SARTA\Task 3 Canton\STA\91592\signals\sheets\91592CP013.dgn 2/2/2012 4:42:01 PM jroth

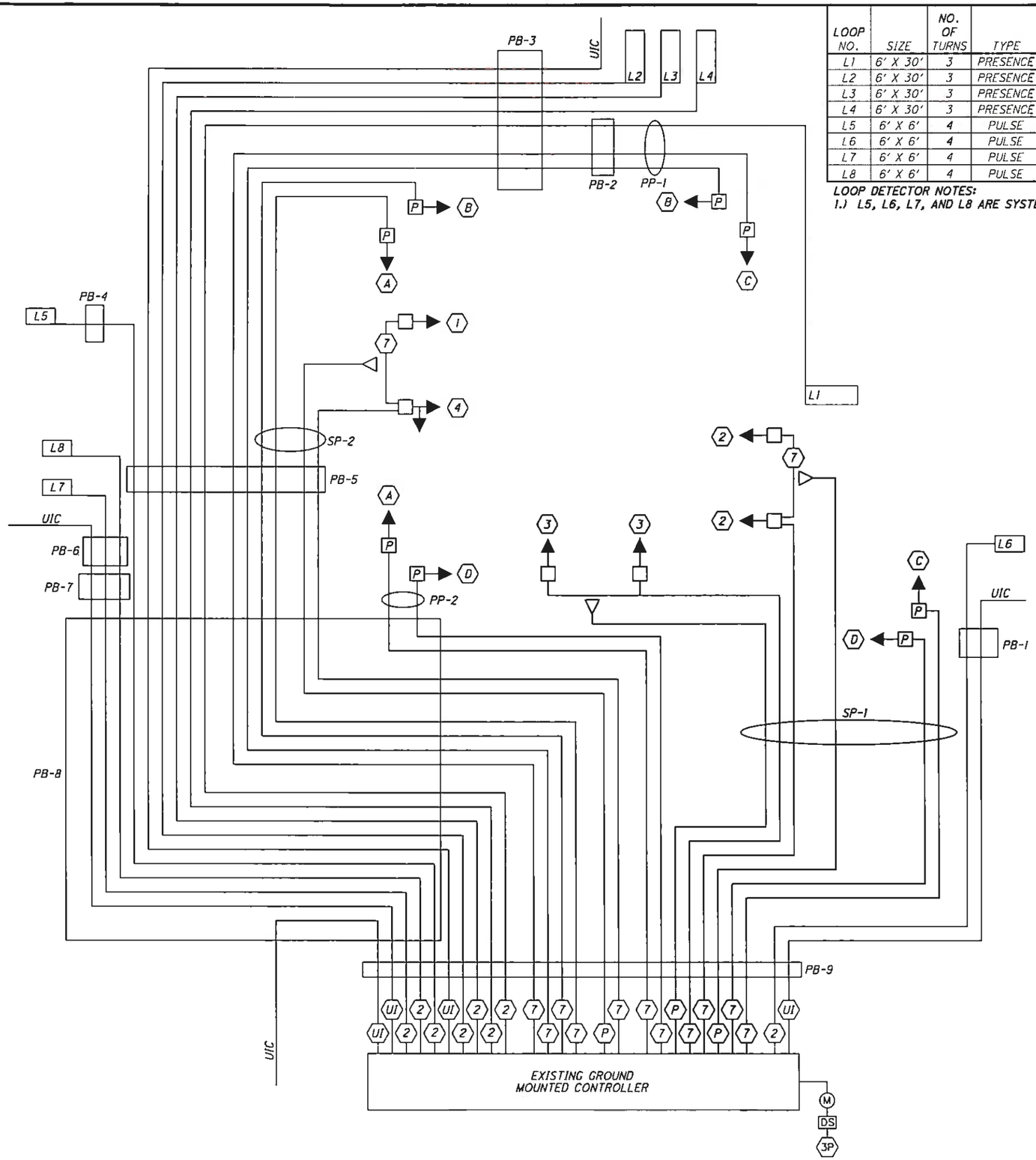

LOOP NO.	SIZE	NO. OF TURNS	TYPE	DELAY OR EXTENSION (SEC.)	DETECTOR UNIT NO.	PHASE
L1	6' X 30'	3	PRESENCE	-	1	1
L2	6' X 30'	3	PRESENCE	8 DELAY	3	4
L3	6' X 30'	3	PRESENCE	-	4	4
L4	6' X 30'	3	PRESENCE	-	5	4
L5	6' X 6'	4	PULSE	-	6	
L6	6' X 6'	4	PULSE	-	7	
L7	6' X 6'	4	PULSE	-	8	
L8	6' X 6'	4	PULSE	-	9	

LOOP DETECTOR NOTES:
1.) L5, L6, L7, AND L8 ARE SYSTEM LOOPS

INTERVAL OR FEATURE		CONTROLLER MOVEMENT NO.							
INTERSECTION MOVEMENT		1	2	3	4	5	6	7	8
MINIMUM GREEN (INITIAL)	(SEC.)	5	5		5		5		
MAXIMUM GREEN I	(SEC.)	14	60		30		60		
MAXIMUM GREEN II	(SEC.)	14	60		30		60		
EXTENSION	(SEC.)	3	3		3		3		
YELLOW CHANGE	(SEC.)	3	3		3		3		
ALL RED CLEARANCE	(SEC.)	1	1.5		1.5		1.5		
WALK	(SEC.)		7		7		7		
PEDESTRIAN CLEARANCE	(SEC.)		10		10		10		
MAXIMUM RECALL	(ON/OFF)		ON				ON		
MINIMUM RECALL	(ON/OFF)								
PEDESTRIAN RECALL	(ON/OFF)		ON		ON		ON		

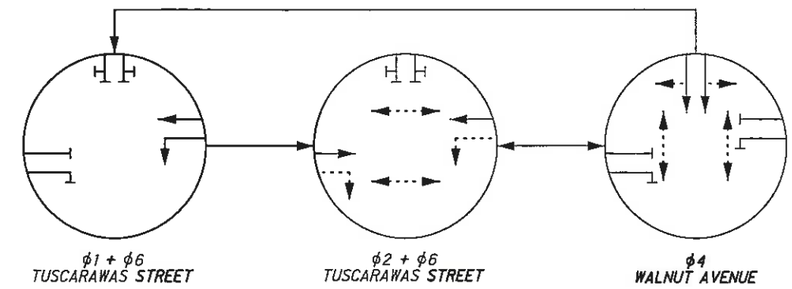

PREEMPT NOTES:

1. CHANNEL 1 SHALL PREEMPT TO SOUTHBOUND GREEN
2. CHANNEL 3 SHALL PREEMPT TO WESTBOUND GREEN
3. CHANNEL 4 SHALL PREEMPT TO EASTBOUND GREEN

PREEMPT NOTES:

1.) ACTIVE WALK INDICATIONS SHALL IMMEDIATELY GO TO "DON'T WALK" UPON RECEIVING PREEMPTION SIGNAL.

2.) IF PHASE ACTIVE CONFLICTS WTIH PREEMPT PHASE CALLED, IT SHALL IMMEDIATELY TIME ITS YELLOW AND ALL RED CLEARANCES.

3.) IF ACTIVE PHASE = THE PREEMPT PHASE, THEN THE PHASE SHALL HOLD FOR THE DURATION OF THE PREEMPT SIGNAL.

4.) AFTER RELEASE FROM PREEMPT, YELLOW AND ALL RED CLEARANCE SHALL BE DISPLAYED AND RETURN PHASE SHALL BE ϕ2 + ϕ6.

5.) IF PREEMPT PHASES = RETURN PHASES ϕ2 + ϕ6 THEN YELLOW AND ALL RED CLEARANCE AFTER PREEMPT SHALL NOT BE DISPLAYED.

ϕ SELECTOR		CONTROLLER
CH 1	SB	PREEMPT 3
CH 2	NB	PREEMPT 4
CH 3	WB	PREEMPT 5
CH 4	EB	PREEMPT 6

LEGEND

- (2) LOOP DETECTOR LEAD-IN CABLE
- (7) SIGNAL CABLE, 7/C, #14 AWG
- (P) EMERGENCY PREEMPTION CABLES
- (V) VIDEO DETECTION CABLES
- (3P) POWER CABLE, 3/C, #10 AWG
- (UI) INTERCONNECT CABLE, 6 PAIR, #19 AWG, SOLID, REA (PE-39)
- PB PULL BOX
- V VENT
- LP LIGHT POLE
- PP PEDESTRIAN POLE
- SP SIGNAL POLE
- UIC UNDERGROUND INTERCONNECT CABLE
- EMH AMERICAN ELECTRIC POWER MANHOLE
- DS DISCONNECT SWITCH
- (M) ELECTRIC METER
- VEHICULAR SIGNAL HEAD
- B BICYCLE SIGNAL HEAD
- P PEDESTRIAN SIGNAL HEAD
- PEDESTRIAN PUSHBUTTON
- VIDEO DETECTION UNIT
- EMERGENCY PREEMPTION UNIT
- POLE
- LUMINAIRE
- SPLICE LOCATION
- EXISTING TO REMAIN
- PROPOSED/TO BE RELOCATED

HORIZONTAL SCALE IN FEET 0 10 20 40

CALCULATED HEH
CHECKED WLC

TRAFFIC SIGNAL DETAILS
TUSCARAWAS STREET AND WALNUT AVENUE

WALNUT & CHERRY COMPLETE STREET BIKE LANES

CP 14

R:\Stark\SARTA\Task 3 Canton\STA\91592\signals\sheets\91592CP014.dgn 2/2/2012 4:42:19 PM jroth

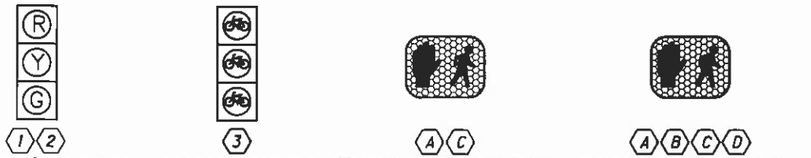

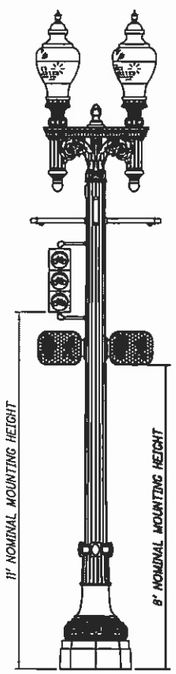

BICYCLE SIGNAL MOUNTING DETAIL
NOT TO SCALE

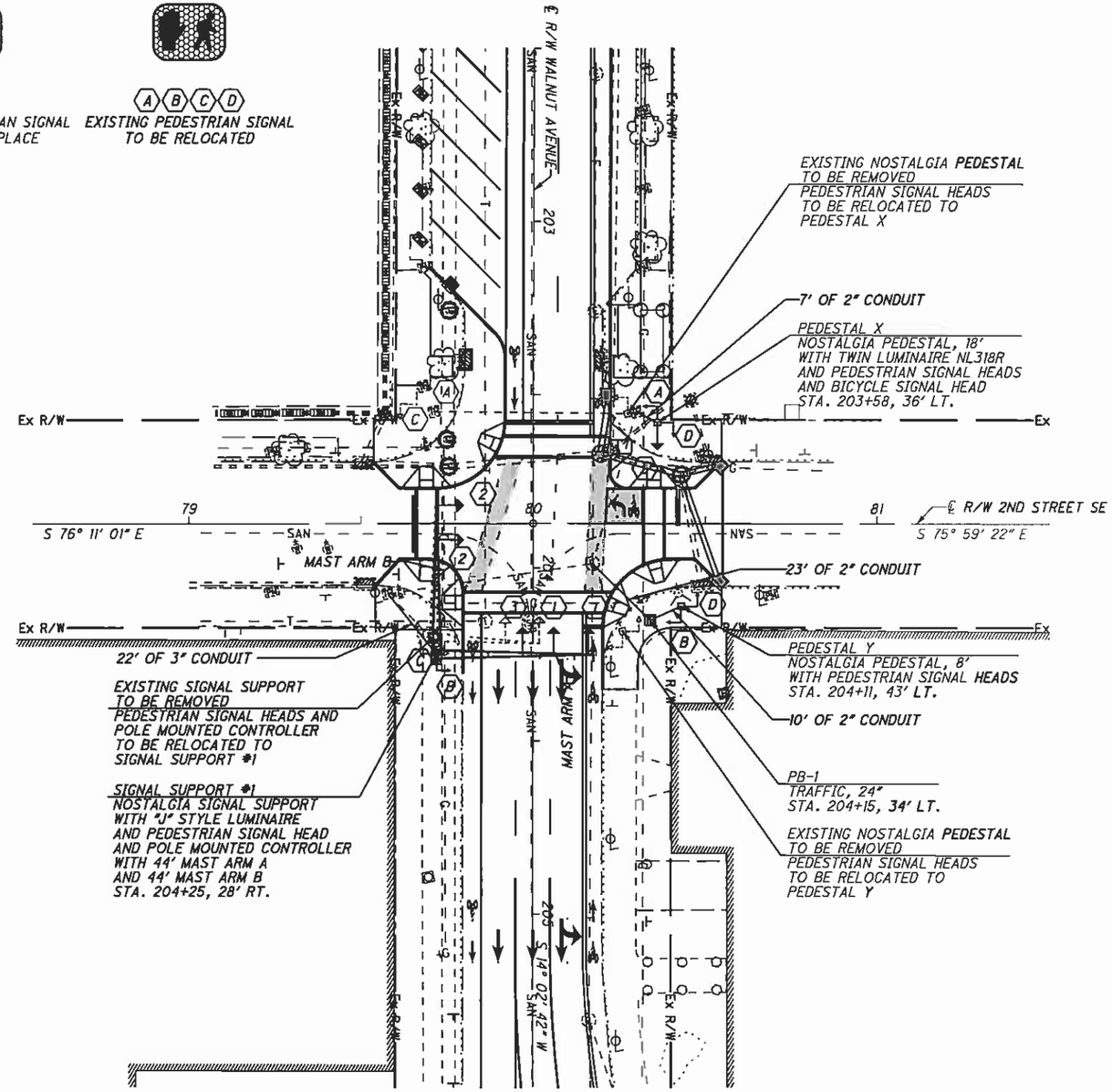

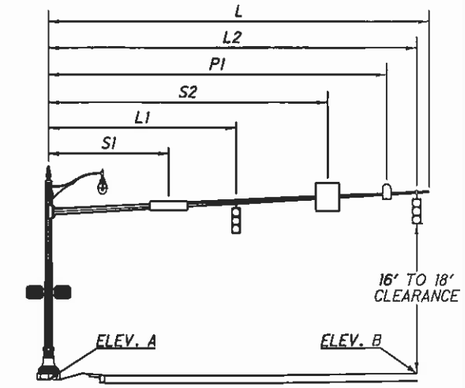

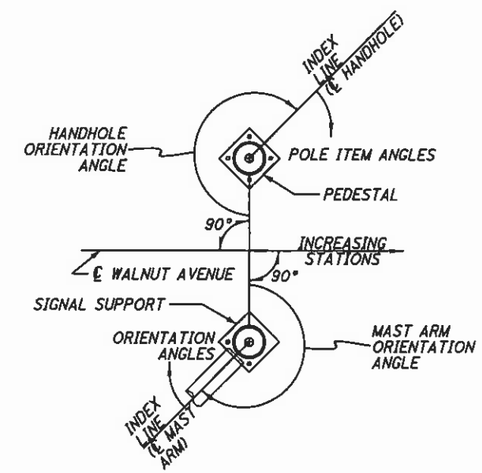

PEDESTAL CHART			
PEDESTAL NO.	PEDESTRIAN SIGNAL	PEDESTRIAN SIGNAL	HANDHOLE
X	A 0	D 90	90
Y	B 90	D 0	180

NOTES

1.) SIGNAL HEAD CONDUIT BRACKETS AND CONDUIT FITTINGS SHALL BE GALVANIZED AND PAINTED (EXCEPT POLE CLAMPS OR BANDS) TO MATCH THE BODY OF THE SIGNAL HEAD.

2.) THE SIGNAL HEAD BRACKET ARMS SHALL BE ATTACHED TO STEEL POLES BY ONE OF THE FOLLOWING METHODS:

A.) 1-1/2 INCHES (38 MILLIMETER) BLIND HALF COUPLING WELDED INTO THE POLE PRIOR TO GALVANIZING.
B.) BRACKET ARM HUB PLATES ATTACHED TO THE POLE AS PER NOTE 3.
C.) POLE CLAMP WITH THREADED HUB.

FIELD INSTALLATION OF THE WIRING HOLES FOR SIGNAL HEADS WILL BE PERMITTED PROVIDED THAT THE HOLES ARE DRILLED OR HOLE SAWN. NO TORCH CUTTING OR FIELD WELDING WILL BE PERMITTED. CUT SURFACES SHALL BE FILED SMOOTH AND COVERED WITH TWO COATS OF ZINC RICH PAINT. GROMMETS OR WIRING GUIDES SHALL BE INSTALLED IN THE HOLES.

3.) THE FOLLOWING MINIMUM SIZE FASTENERS SHALL BE USED FOR THE ATTACHMENT OF THE INDICTED HARDWARE TO STEEL POLES:

A.) CONDUIT BRACKET ARM HUB PLATES: 1/2 INCH (13 MILLIMETER) DIA. SCREW OF 3/4 INCH (19 MILLIMETER) WIDE PASSIVATED STAINLESS STEEL BAND (TWO FASTENERS OR BANDS PER HUB PLATE).
B.) CONDUIT: TWO HOLE CONDUIT STRAPS WITH 1/4 INCH (6.4 MILLIMETER) DIA. SCREWS OR 3/4 INCH (19 MILLIMETER) WIDE PASSIVATED STAINLESS STEEL BANDS.

THE SCREWS SHALL UTILIZE A DRILLED AND TAPPED HOLE OR BE THE SELF-TAPPING TYPE.

4.) ALL CONNECTIONS SHALL BE OF THE TRI-STUD DESIGN.

SUPPORT NO.	MAST ARM	L (FT.)	L1 (FT.)	L2 (FT.)	L3 (FT.)	P1 (FT.)	S1 (FT.)	S2 (FT.)	S3 (FT.)	ELEVATION A	ELEVATION B	LOCATION	STATION	OFFSET	MAST ARM A ANGLE (DEG.)	ORIENTATION ANGLES (DEG.) FROM MAST ARM A: MAST ARM B ANGLE (DEG.)	HANDHOLE	CONTROLLER	POWER SERVICE	DISCONNECT SWITCH	PEDESTRIAN SIGNAL HEADS
1	A	45	25	34	44	42	15	30	37	1034.82	1035.11	WALNUT	204+25	28' RT.	0	270	180	90	180	180	90, 180
	B	44	33	43		40	20	29	38		1035.37										

HORIZONTAL SCALE IN FEET 0 10 20 40

CALCULATED HEH
CHECKED WLC

TRAFFIC SIGNAL PLAN
2ND STREET SE AND WALNUT AVENUE

WALNUT & CHERRY
COMPLETE STREET
BIKE LANES

CP 15

R:\Stark\SARTA\Task 3 Canton\STA\91592\signals\sheets\91592CP015.dgn 2/2/2012 4:42:44 PM jroth

INTERVAL OR FEATURE		CONTROLLER MOVEMENT NO.							
INTERSECTION MOVEMENT		1	2	3	4	5	6	7	8
MINIMUM GREEN (INITIAL)	(SEC.)		5		5				
MAXIMUM GREEN 1	(SEC.)		60		30				
MAXIMUM GREEN 2	(SEC.)		60		30				
EXTENSION	(SEC.)								
YELLOW CHANGE	(SEC.)		3		3				
ALL RED CLEARANCE	(SEC.)		1.5		1.5				
WALK	(SEC.)		7		7				
PEDESTRIAN CLEARANCE	(SEC.)		10		10				
MAXIMUM RECALL	(ON/OFF)		ON		ON				
MINIMUM RECALL	(ON/OFF)								
PEDESTRIAN RECALL	(ON/OFF)		ON		ON				

*BICYCLE SIGNALS SHALL FOLLOW PEDESTRIAN SIGNAL PHASING AND TIMING

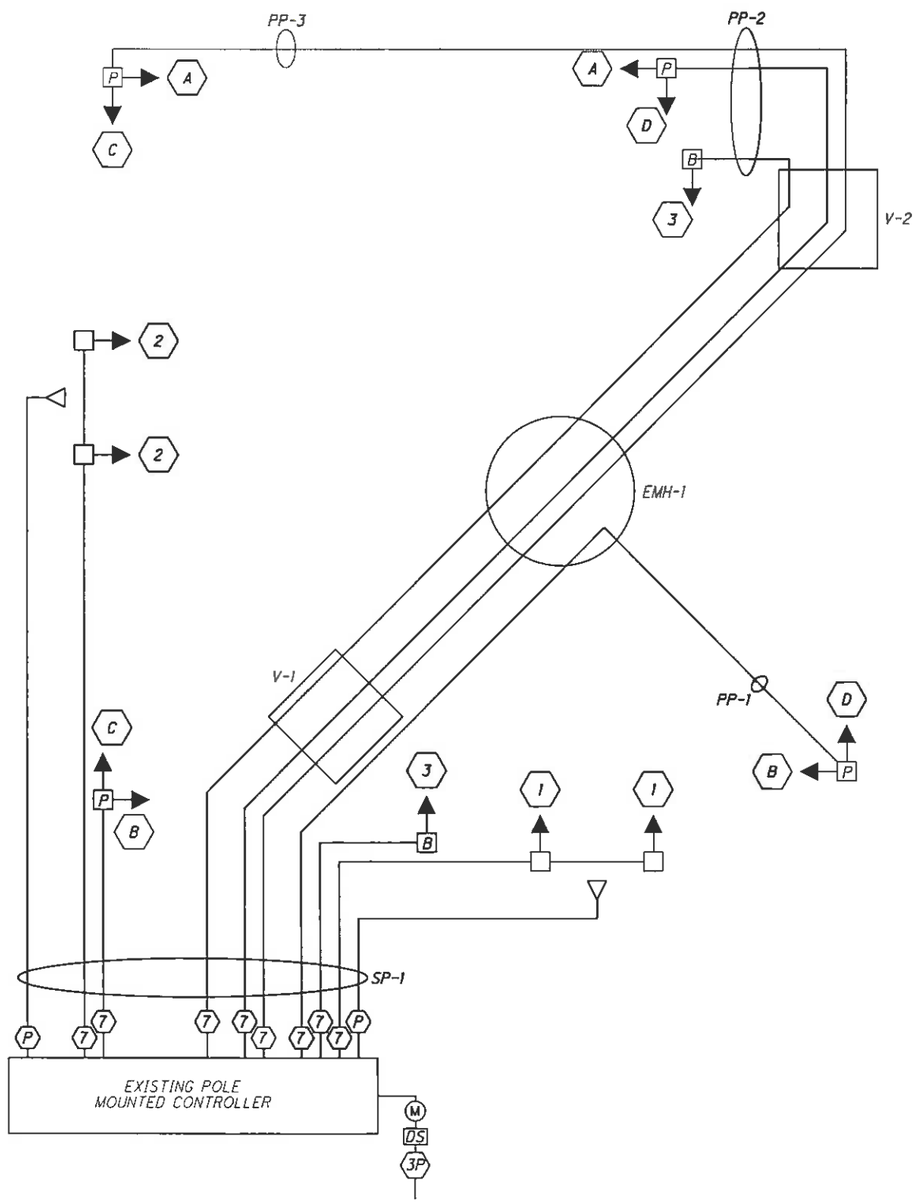

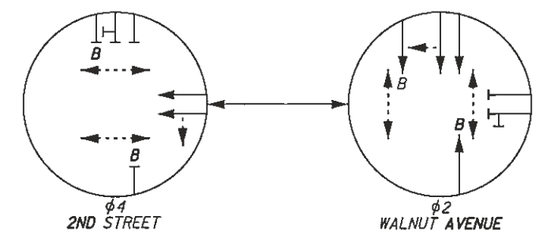

PREEMPT NOTES:

1. CHANNEL 1 SHALL PREEMPT TO SOUTHBOUND GREEN
2. CHANNEL 3 SHALL PREEMPT TO WESTBOUND GREEN

LEGEND

- (2) LOOP DETECTOR LEAD-IN CABLE
- (7) SIGNAL CABLE, 7/C, #14 AWG
- (P) EMERGENCY PREEMPTION CABLES
- (V) VIDEO DETECTION CABLES
- (3P) POWER CABLE, 3/C, #10 AWG
- (UI) INTERCONNECT CABLE, 6 PAIR, #19 AWG, SOLID, REA (PE-39)
- PB PULL BOX
- V VENT
- LP LIGHT POLE
- PP PEDESTRIAN POLE
- SP SIGNAL POLE
- UIC UNDERGROUND INTERCONNECT CABLE
- EMH AMERICAN ELECTRIC POWER MANHOLE
- DS DISCONNECT SWITCH
- (M) ELECTRIC METER
- VEHICULAR SIGNAL HEAD
- B BICYCLE SIGNAL HEAD
- P PEDESTRIAN SIGNAL HEAD
- PEDESTRIAN PUSHBUTTON
- VIDEO DETECTION UNIT
- EMERGENCY PREEMPTION UNIT
- POLE
- LUMINAIRE
- SPLICE LOCATION
- EXISTING TO REMAIN
- PROPOSED/TO BE RELOCATED

HORIZONTAL SCALE IN FEET 0 10 20 40

CALCULATED HEH
CHECKED WLC

TRAFFIC SIGNAL DETAILS
2ND STREET SE AND WALNUT AVENUE

WALNUT & CHERRY
COMPLETE STREET
BIKE LANES

CP 16

R:\Stark\SARTA\Task 3 Canton\STA\91592\signals\sheets\91592CP016.dgn 2/2/2012 4:43:04 PM jroth

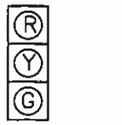

1 2 3 4
EXISTING SIGNAL HEADS TO BE RELOCATED

5
PROPOSED BICYCLE SIGNAL HEADS

A B C D
EXISTING PEDESTRIAN SIGNAL TO REMAIN IN PLACE

A B D
EXISTING PEDESTRIAN SIGNAL TO BE RELOCATED

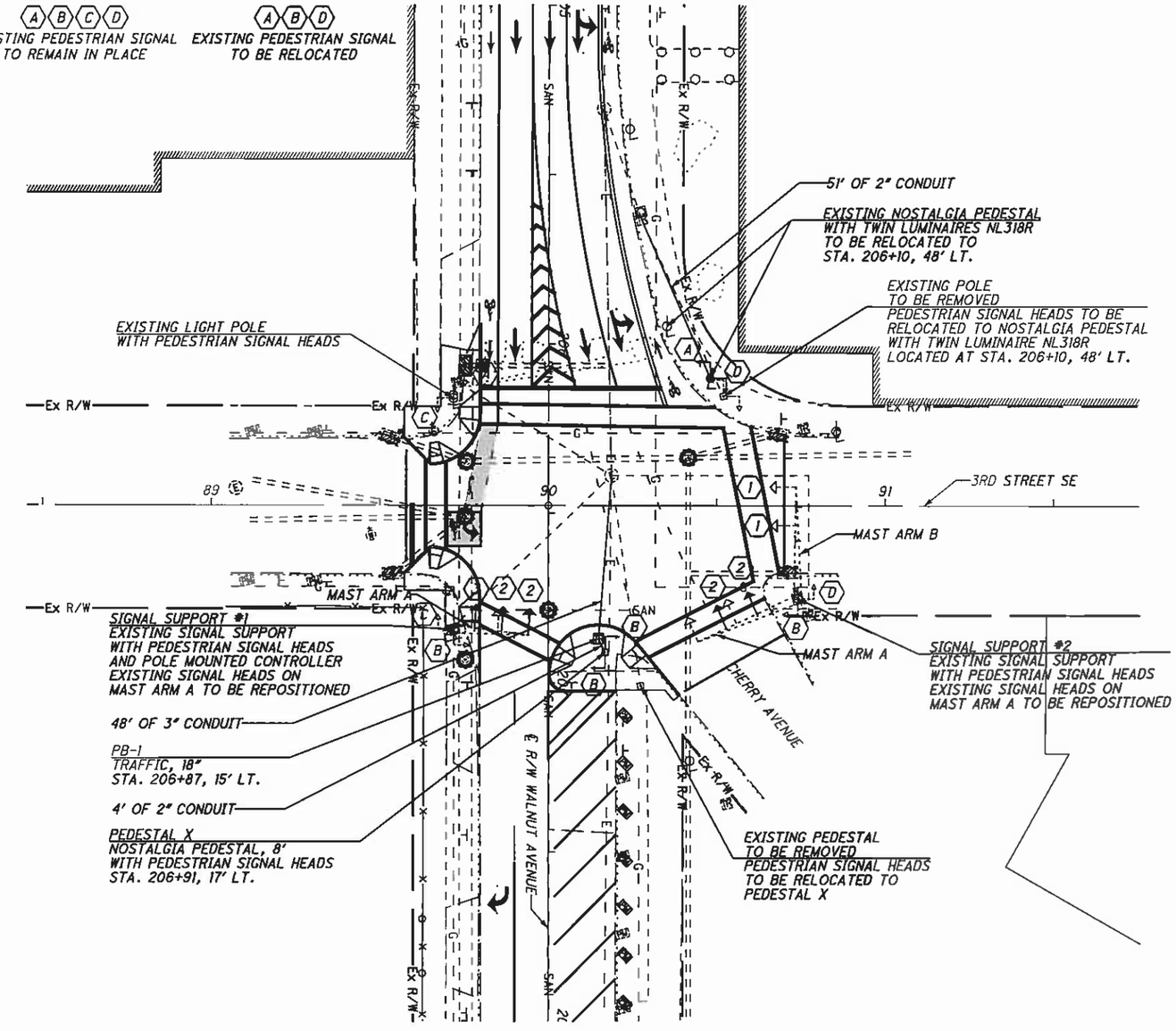

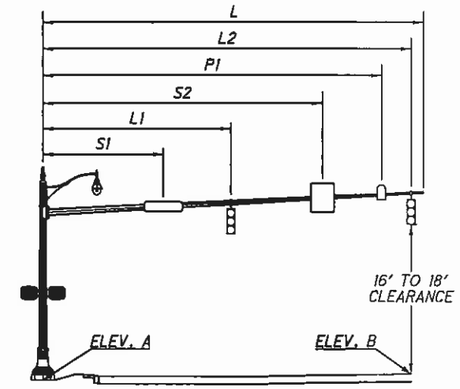

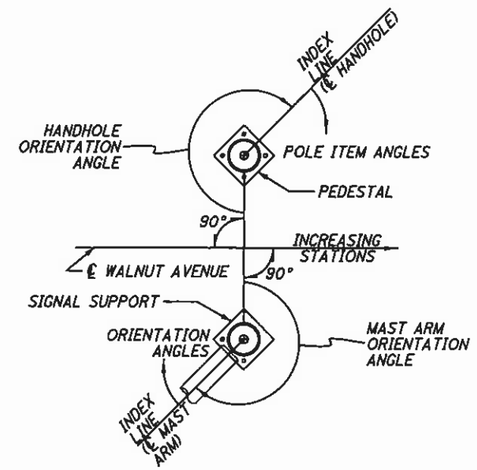

PEDESTAL CHART			
PEDESTAL NO.	PEDESTRIAN SIGNAL	PEDESTRIAN SIGNAL	HANDHOLE
X	B 0	B 180	270

SUPPORT NO.	MAST ARM	L (FT.)	L1 (FT.)	L2 (FT.)	L3 (FT.)	P1 (FT.)	S1 (FT.)	S2 (FT.)	ELEVATION A	ELEVATION B	LOCATION	STATION	OFFSET	MAST ARM A ANGLE (DEG.)	ORIENTATION ANGLES (DEG.) FROM MAST ARM A: MAST ARM B ANGLE (DEG.)	HANDHOLE	CONTROLLER	POWER SERVICE	DISCONNECT SWITCH	PEDESTRIAN SIGNAL HEADS
1	A	23	6	14	22	11	18		1034.31	1034.39	WALNUT	206+84	28' RT.	0		180	180	180	180	90, 180
2	A	33	13	23		26			1034.70	1034.51	WALNUT	206+75	74' LT.	337	112	180		180	180	203, 293
	B	34	22	33		25	17	27	1034.70	1033.93										

CALCULATED HEH
CHECKED WLC

HORIZONTAL SCALE IN FEET 0 10 20 40

TRAFFIC SIGNAL PLAN
3RD STREET SE AND WALNUT AVENUE

WALNUT & CHERRY COMPLETE STREET BIKE LANES

CP 17

R:\Stark\SARTA\Task 3 Canton\STA\91592\signals\sheets\91592CP017.dgn 2/2/2012 4:43:27 PM jroth

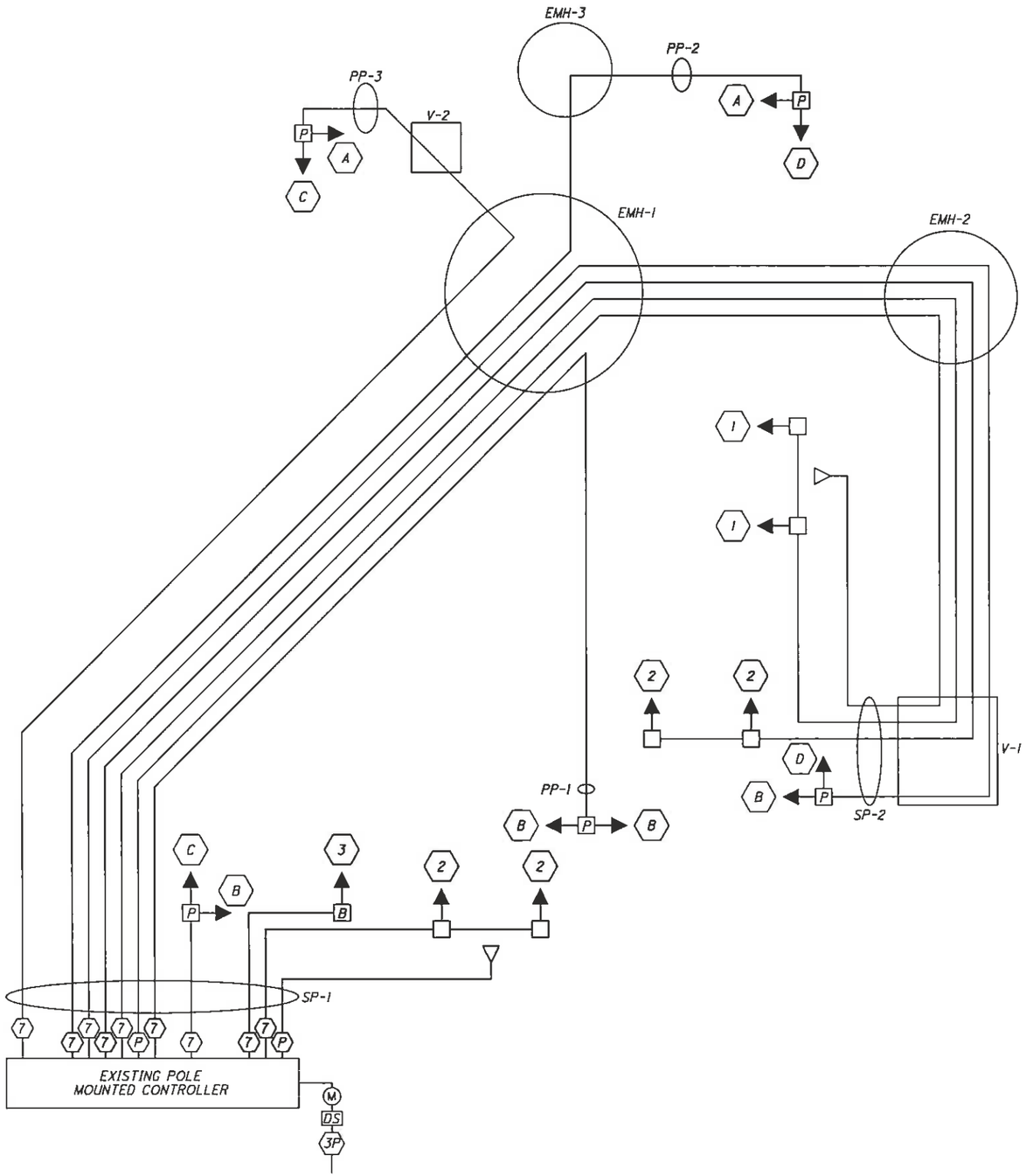

INTERVAL OR FEATURE		CONTROLLER MOVEMENT NO.							
INTERSECTION MOVEMENT		1	2	3	4	5	6	7	8
MINIMUM GREEN (INITIAL)	(SEC.)		5		5				
MAXIMUM GREEN 1	(SEC.)		60		30				
MAXIMUM GREEN 2	(SEC.)		60		30				
EXTENSION	(SEC.)								
YELLOW CHANGE	(SEC.)		4		4				
ALL RED CLEARANCE	(SEC.)		1		1				
WALK	(SEC.)		7		11				
PEDESTRIAN CLEARANCE	(SEC.)		10		10				
MAXIMUM RECALL	(ON/OFF)		ON		ON				
MINIMUM RECALL	(ON/OFF)								
PEDESTRIAN RECALL	(ON/OFF)		ON		ON				

*BICYCLE SIGNALS SHALL FOLLOW PEDESTRIAN SIGNAL PHASING AND TIMING

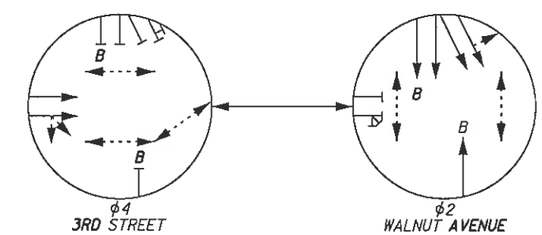

PREEMPT NOTES:
1. CHANNEL 1 SHALL PREEMPT TO SOUTHBOUND GREEN
2. CHANNEL 4 SHALL PREEMPT TO EASTBOUND GREEN

DETECTOR	SIZE	NO. OF TURNS	TYPE	DELAY OR EXTENSION (SEC.)	PHASE
39	6' X 6'	3	PULSE	-	SYS.
40	6' X 6'	3	PULSE	-	SYS.
41	6' X 6'	3	PULSE	-	SYS.

LEGEND

- 2 LOOP DETECTOR LEAD-IN CABLE
- 7 SIGNAL CABLE, 7/C, #14 AWG
- P EMERGENCY PREEMPTION CABLES
- V VIDEO DETECTION CABLES
- 3P POWER CABLE, 3/C, #10 AWG
- UI INTERCONNECT CABLE, 6 PAIR, #19 AWG, SOLID, REA (PE-39)
- PB PULL BOX
- V VENT
- LP LIGHT POLE
- PP PEDESTRIAN POLE
- SP SIGNAL POLE
- UIC UNDERGROUND INTERCONNECT CABLE
- EMH AMERICAN ELECTRIC POWER MANHOLE
- DS DISCONNECT SWITCH
- M ELECTRIC METER
- VEHICULAR SIGNAL HEAD
- B BICYCLE SIGNAL HEAD
- P PEDESTRIAN SIGNAL HEAD
- PEDESTRIAN PUSHBUTTON
- VIDEO DETECTION UNIT
- EMERGENCY PREEMPTION UNIT
- POLE
- LUMINAIRE
- SPLICE LOCATION
- EXISTING TO REMAIN
- PROPOSED/TO BE RELOCATED

HORIZONTAL SCALE IN FEET 0 10 20 40

CALCULATED HEH
CHECKED WLC

TRAFFIC SIGNAL DETAILS
3RD STREET SE AND WALNUT AVENUE
WALNUT & CHERRY COMPLETE STREET BIKE LANES

CP 18

R:\Stark\SARTA\Task 3 Canton\STA\91592\signals\sheets\91592CP018.dgn 2/2/2012 4:43:45 PM jroth