WATER PARK FACILITY PROJECT AT EDWARD "PEEL" COLEMAN CENTER

1400 Sherrick Road S.E. – Canton, Ohio 44707

City of Canton

BRAUN & STEIDL architects

1041 WEST MARKET STREET AKRON, OHIO 44313

ARCHITECT
(330) 864-7755
(f) (330) 864-3691

THORSON BAKER & ASSOCIATES, INC.
3030 WEST STREETSBORO ROAD RICHFIELD, OHIO 44286

CIVIL & LANDSCAPE DESIGN
(330)-659-6688
(f) (330)-659-66755

COUNSILMAN + HUNSAKER & ASSOCIATES
10733 SUNSET OFFICE DRIVE, SUITE 400 SAINT LOUIS, MO 63127

AQUATIC DESIGN
(314)-894-1245
f (314)-894-0109

THORSON BAKER & ASSOCIATES, INC.
3030 WEST STREETSBORO ROAD RICHFIELD, OHIO 44286

PLUMBING, MECHANICAL & ELECTRICAL
(330)-659-6688
(f) (330)-659-66755

ROBERT M. HABEL 7942

Robert M.Habel, License # 7942
Expiration Date 12/31/2013

LOCATION MAP

KEY MAP

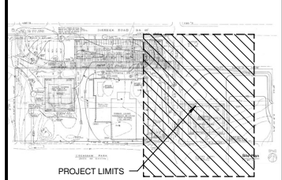

INDEX OF DRAWINGS

GENERAL

G-001 TITLE SHEET

CIVIL / LANDSCAPING

C-0 SURVEY
C-1 SITE PREPARATION PLAN
C-2 GEOMETRIC PLAN
C-3 INTERIM CONSTRUCTION SWPP PLAN
C-3.1 POST SWPP & GRADING PLAN
C-4 UTILITY PLAN
C-5 SITE NOTES
C-6 SWPP NOTES & DETAILS
C-7 SWPP NOTES & DETAILS
C-8 SITE DETAILS
C-9 SITE DETAILS
C-10 SITE DETAILS

L-1 LANDSCAPE PLAN

ARCHITECTURAL

AD-101 DEMOLITION PLANS

A-101 FIRST FLOOR PLAN
A-102 FIRST FLOOR REFLECTED CEILING PLAN - PARTIAL FINISH PLAN
A-601 DOOR SCHEDULE AND DETAILS - ROOM FINISH SCHEDULE & LEGEND

AQUATICS

SP0.0 SPRAYGROUND REFERENCE PLAN
SP1.0 SPRAYGROUND PLAN
SP1.1 SPRAYGROUND DETAILS
SP1.2 SPRAYGROUND DETAILS
SP2.0 SPRAYGROUND LOCATION POINT PLAN
SP3.0 SPRAYGROUND GRAVITY PIPING PLAN
SP3.1 SPRAYGROUND RETURN PIPING PLAN
SP4.0 SPRAYGROUND MECHANICAL ROOM PLAN & SECTIONS
SP4.1 SPRAYGROUND MECHANICAL ROOM DETAILS

PLUMBING

P-101 PLUMBING PLAN

MECHANICAL

M-101 MECHANICAL PLAN

MP-401 MECHANICAL & PLUMBING SPECIFICATIONS

ELECTRICAL

ES-101 ELECTRICAL SITE PLAN
ED-101 ELECTRICAL POWER & LIGHTING DEMOLITION
E-101 ELECTRICAL POWER PLAN
E-102 ELECTRICAL LIGHTING PLAN
E-201 ELECTRICAL DETAILS, NOTES & SCHEDULES
E-202 ELECTRICAL DETAILS, NOTES & SCHEDULES
E-301 ELECTRICAL ONE-LINE DIAGRAM
E-401 ELECTRICAL SPECIFICATIONS
E-402 ELECTRICAL SPECIFICATIONS

ABBREVIATIONS

ACT	ACOUSTIC CEILING TILE
ADJ	ADJACENT
AFF	ABOVE FINISH FLOOR
AHJ	AUTHORITY HAVING JURISDICTION
ALT	ALTERNATE
APPD SUB	APPROVED SUBSTITITION
BLDG	BUILDING
BRG	BEARING
CL	CENTERLINE
CLR	CLEAR
CMU	CONCRETE MASONRY UNIT
CONC	CONCRETE
CONT	CONTINOUS
COORD	COORDINATE
CPT	CARPET
CT	CERAMIC TILE
DIA	DIAMETER
DIAG	DIAGONAL
DIM	DIMENSION
DET	DETAIL
DEMO	DEMOLITION
DWG	DRAWINGS
EA	EACH
ELEC	ELECTRICAL
EL	ELEVATION
EQ	EQUAL
EXT	EXTERIOR
FE	FIRE EXTINGUISHER
FEC	FIRE EXTINGUISHER CABINET
FBO	FURNISHED BY OWNER
FLR	FLOOR
GA	GAUGE
GALV	GALVANIZED
GYP BD	GYPSUM BOARD
HM	HOLLOW METAL
HORIZ	HORIZONTAL
HR	HOUR
HT	HEIGHT
IBO	INSTALLED BY OWNER
IBC	INSTALLED BY CONTRACTOR
INSUL	INSULATION
MAX	MAXIMUM
MFR	MANFACTURER
MIN	MINMUM
MO	MASONRY OPENING
NIC	NOT IN CONTRACT
NTS	NOT TO SCALE
OC	ON CENTER
OPP	OPPOSITE
PART	PARTIAL
PLAM	PLASTIC LAMINATE
PL	PLATE
PT	PAINT, POINT, PRESSURE TREATED
REQD	REQUIRED
REQ	REQUIRE
SCHED	SCHEDULE
SCW	SOLID CORE WOOD
SF	SQUARE FOOT (FEET)
SHTHG	SHEATHING
SIM	SIMILAR
SPEC	SPECIFICATION
SS	STAINLESS STEEL
T&G	TONGUE & GROOVE
TYP	TYPICAL
TOM	TOP OF MASONRY
TOW	TOP OF WALL
UL	UNDERWRITERS LABORATORY
UNO	UNLESS NOTED OTHERWISE
VCT	VINYL COMPOSITION TILE
VERT	VERTICAL
w/	WITH
w/o	WITHOUT

GENERAL NOTES

1. THE CONTRACTOR TO VERIFY ALL DIMENSIONS IN THE FIELD AND SHALL NOTIFY THE ARCHITECT OF ANY DISCREPANCIES. ALL WORK REQUIRING MEASURING SHALL BE DONE ACCORDING TO FIGURES ON DRAWING AND NOT SCALED FROM DRAWINGS. ARCHITECT WILL FURNISH ALL MISSING DIMENSIONS ON REQUEST.
2. ALL WORK SHALL CONFORM TO PREVAILING CODES, ORDINANCES, AND REQUIREMENTS.
3. THE CONTRACTOR IS RESPONSIBLE TO OBTAIN ALL PERMITS AND INSPECTIONS REQUIRED FOR CONSTRUCTION, AND SHALL PAY ALL APPLICABLE FEES.
4. ALL PENETRATIONS OF FIRE-RATED WALL SHALL BE SEALED WITH APPROVED MATERIALS, THE FULL THICKNESS OF THE CONSTRUCTION ELEMENTS.

SYMBOLS LEGEND

ROOM NAME
101 ROOM NUMBER
101 101 A DOOR NUMBER
F101 WINDOW TAG
SIM A101 DETAIL NUMBER / SHEET NUMBER
? CODED/ DEMOLITION NOTE
TA-# TOILET ACCESSORY TAG
TI EQUIPMENT TAG
? MATERIAL FINISH TAG
(1'-0" A.F.F.) CEILING HEIGHT TAG
PW#X-RX INTERIOR PARTITION / EXTERIOR WALL TAG
PW#X-RX X INTERIOR PARTITION w/ HEAD CONDITION TYPE

ISSUED FOR BID

12-13-13

Revision

No	Date	Description

Copyright 2012
Braun & Steidl Architects

SET NO.

TITLE SHEET

G-001

11044

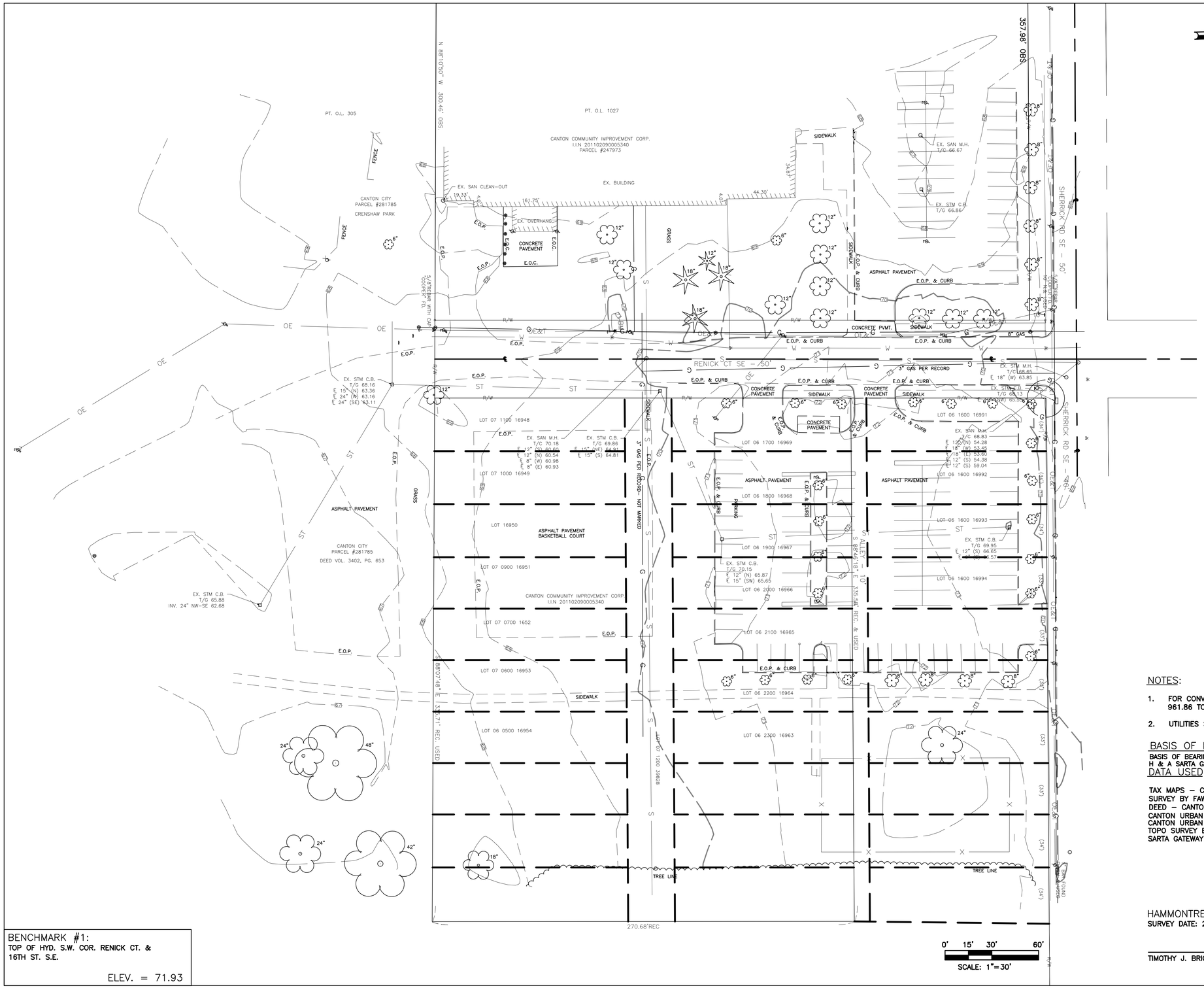

LEGEND

○	EX. MONUMENT (FOUND)
℄	CENTER LINE
R/W	RIGHT OF WAY
E.O.P.	EDGE OF PAVEMENT
F.F.	FINISH FLOOR
— — —	EX. CONTOUR LINE
	PROP. CONTOUR LINE
–980–	CONTOUR LABEL
x x x	FENCE (AS NOTED)
	SIGN
	DECIDIOUS TREE (AS NOTED)
	EVERGREEN TREE (AS NOTED)
	POLE ANCHOR
	GUY POLE
	GENERAL POLE
	LIGHT POLE
	POWER POLE
–G–	GAS LINE
	GAS LINE MARKER
	GAS VALVE
–S–	SANITARY SEWER LINE
	SANITARY M.H./ C.O.
M.H.	MANHOLE
–ST–	STORM SEWER LINE
	STORM CATCH BASIN
	STORM MANHOLE
T/G	TOP OF GRATE
T/C	TOP OF COVER
FL	FLOWLINE
–W–	WATER LINE
	WATER VALVE
	FIRE HYDRANT

LEGEND:

- ● PROPERTY MARKER FOUND AS NOTED
- ○ 1/2 INCH IRON BAR WITH H&A CAP SET UNLESS OTHERWISE NOTED
- PL PROPERTY LINE
- ℄ CENTERLINE
- R/W RIGHT-OF-WAY LINE
- P.O.B POINT OF BEGINNING
- T.P.O.B. TRUE PLACE OF BEGINNING

NOTES:

1. FOR CONVERSION FROM CITY DATUM TO U.S.G.S. ADD 961.86 TO ELEVATIONS SHOWN PER COOPER SURVEY.
2. UTILITIES SHOWN FROM FIELD OBSERVATION AND RECORDS.

BASIS OF BEARING:

BASIS OF BEARINGS IS BASED ON AN ASSUMED MERIDIAN, AND H&A H & A SARTA GATEWAY TOPO SURVEY 2009.

DATA USED:

TAX MAPS – CANTON 96
SURVEY BY FAWCETT OF 5 ACRES DATED DEC.1981
DEED – CANTON COMMUNITY INVESTMENT CORP.
CANTON URBAN LEAGUE UTILITIES PLAN DATED 1984
CANTON URBAN LEAGUE SITE PLAN DATED 1984
TOPO SURVEY BY COOPER DATED 1984
SARTA GATEWAY SURVEY DATED FEB. 2012.

BENCHMARK #1:
TOP OF HYD. S.W. COR. RENICK CT. & 16TH ST. S.E.
ELEV. = 71.93

HAMMONTREE & ASSOCIATES, LIMITED
SURVEY DATE: 2–14–12

TIMOTHY J. BRIGGS, P.S. #7495 DATE

HAMMONTREE & ASSOCIATES, LTD.
ENGINEERS, PLANNERS, SURVEYORS
CANTON–AKRON–PITTSBURGH
5233 STONEHAM ROAD NORTH CANTON, OHIO 44720
CANTON: (330)499–8817 AKRON:(330)633–7274
TOLL FREE: 1–800–394–8817 FAX: (330)499–0149
www.hammontree–engineers.com

REV. BY:	DATE:	DESC.:	
REV. BY:	DATE:	DESC.:	
REV. BY:	DATE:	DESC.:	
REV. BY:	DATE:	DESC.:	
REV. BY:	DATE:	DESC.:	
REV. BY:	DATE:	DESC.:	

Y:\2011\2011-0794\DWG\2011-0794-00 (BUILDING).DWG

FLD BK: 556
BK PG: 67
CRW CHF: MDG
CP/TRGHT: 2012
TAB: SITE

DESN BY: MDG
DRWN BY: MDG
CHKD BY: BAB
RVWD BY: TJB
DATE: 2/21/12

SCALES
HORIZ: 1"=20'
VERT:
CONTOUR INT: 1'

MAP OF SURVEY
COLEMAN CENTER SPRAY PARK
FOR: CITY OF CANTON
LOCATED IN THE CITY OF CANTON
STARK COUNTY, OHIO

1/1

ISSUED DATE: 3–14–12

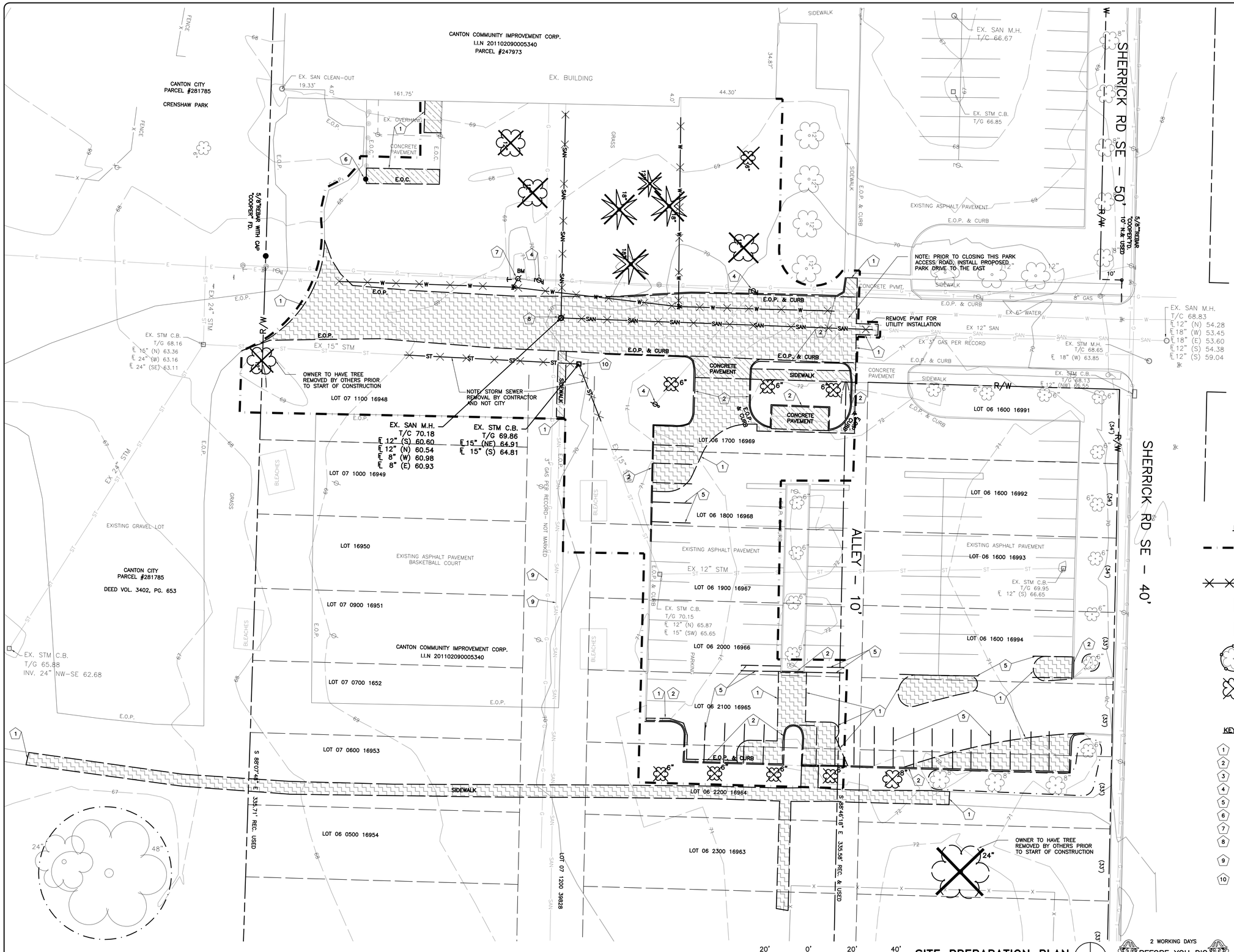

SITE PREPARATION PLAN

SEE DEMOLITION NOTES ON SHEET C-5

LEGEND

- 6' HT CHAIN LINK CONSTRUCTION FENCE CONTRACTOR TO DETERMINE FINAL LOCATION OF FENCE AND GATES
- ST — UTILITY TO BE REMOVED (BY CITY) UNLESS NOTED OTHERWISE
- ASPHALT & BASE TO BE REMOVED
- CONCRETE & BASE TO BE REMOVED
- TREE PROTECTION 4' HT. ORANGE PVC CONSTRUCTION FENCE
- TREE TO BE REMOVED BY CONTRACTOR (BY CITY)

KEY NOTES

1. SAWCUT
2. REMOVE CONCRETE CURB
3. REMOVE SIGN
4. REMOVE LIGHT/UTILITY POLE (BY CITY)
5. REMOVE STRIPING
6. REMOVE BOLLARD
7. REMOVE HYDRANT ASSEMBLY (BY CITY)
8. REMOVE UTILITY STRUCTURE (BY CITY) UNLESS NOTED OTHERWISE
9. PER CITY/ UTILITY COMMENTS, THIS UTILITY RUN DOES NOT EXIST
10. REMOVE UTILITY STRUCTURE BY CONTRACTOR

2 WORKING DAYS
BEFORE YOU DIG
CALL TOLL FREE: 800-362-2764
OHIO UTILITIES PROTECTION SERVICE

THORSON BAKER & Associates, Inc.
Consulting Engineers
3030 West Streetsboro Road
Richfield, Ohio 44286
(330) 659-6688 Ph.
(330) 659-6675 Fax

BRAUN & STEIDL architects
Akron
1041 West Market Street - Akron, OH 44313 - 330.864.7755 fax 330.864.3691
Columbus

THE CITY OF CANTON
WILLIAM J. HEALY II, MAYOR

EDWARD 'PEEL' COLEMAN CENTER -
SPRAY PARK
1400 Sherrick Road S.E. - Canton, Ohio 44707

12-13-13

ISSUED FOR BID

Sheet Issue Date:	12-13-13
Designed:	TBA
Drafted:	TBA
Checked:	MNS

Revisions:

No.	Date	Description

Copyright - 2013
Braun & Steidl Architects

SITE PREPARATION PLAN

C-1

11044

Y:\2011\2011-0794\Civil\Landscape\2011-0794-C1 (SEAD).dwg, Layout1, 12/5/2013 11:03:26 AM, 1:1
1/13/2012 2:55:33 PM

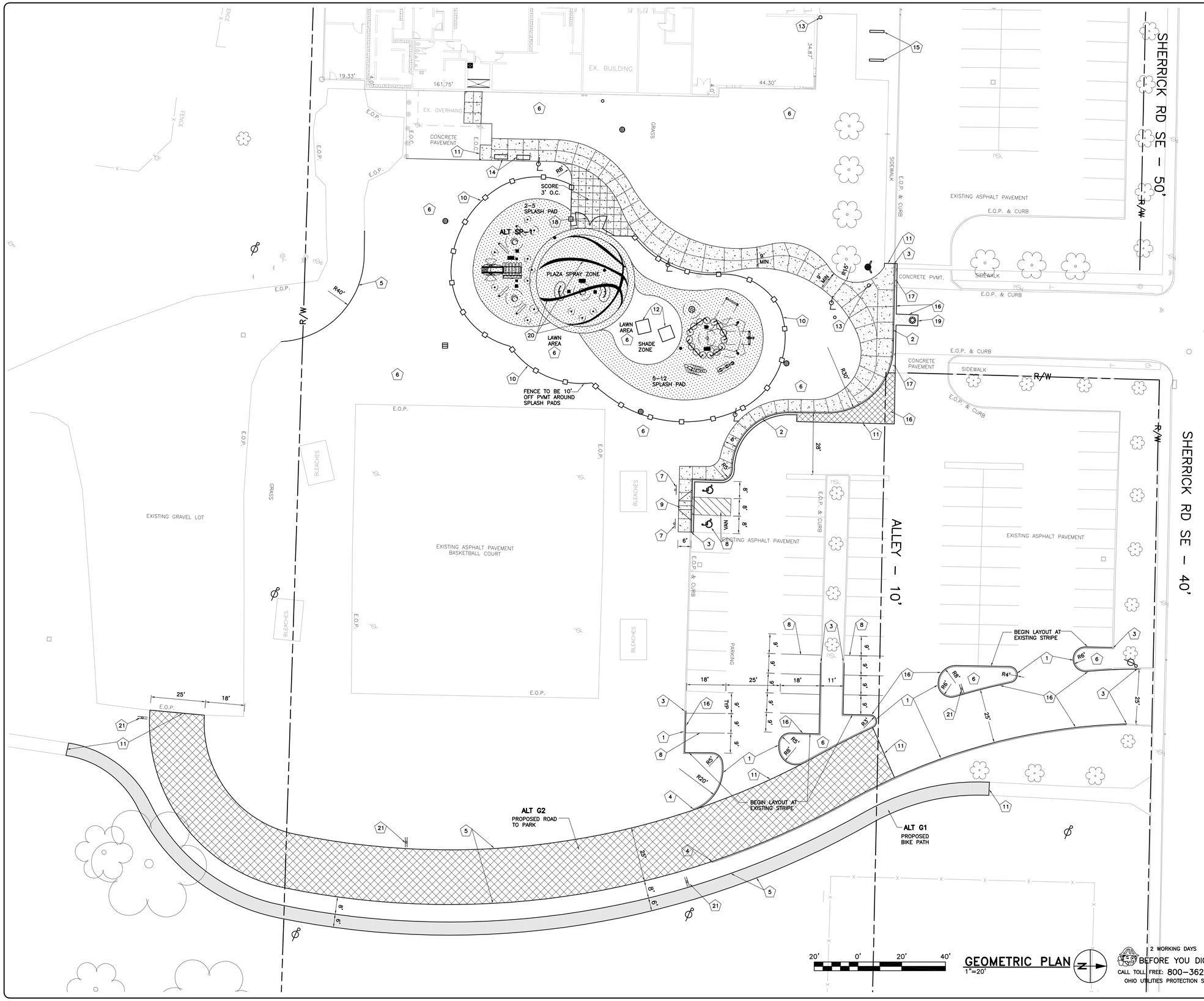

GEOMETRIC PLAN
1"=20'

2 WORKING DAYS
BEFORE YOU DIG
CALL TOLL FREE: 800–362–2764
OHIO UTILITIES PROTECTION SERVICE

SEE GEOMETRIC NOTES ON SHEET C–5

LEGEND

- 4' HT CHAIN LINK FENCE
- PROPOSED STANDARD DUTY ASPHALT PAVEMENT
- PROPOSED HEAVY DUTY ASPHALT PAVEMENT
- PROPOSED STANDARD DUTY CONCRETE PAVEMENT
- PROPOSED CONCRETE SPLASH PAD SEE COUNCILMAN HUNSAKER DWG FOR LAYOUT & DETAILS
- ALT E1 PROPOSED LIGHT FIXTURE SEE ELEC. DWG.
- PROPOSED UTILITY POLE BY AEP

KEY NOTES

1. CONCRETE VERTICAL CURB
2. INTEGRAL CONCRETE CURB & WALK
3. MEET & MATCH EXISTING CURB
4. CURB TAPER
5. ASPHALT EDGE
6. LANDSCAPE AREA
7. ADA SIGN
8. STRIPING
9. TYPE 'D' HC RAMP
10. 4' HIGH BLACK VINYL CHAIN LINK FENCE
11. MEET AND MATCH EXISTING PAVEMENT
12. PICNIC TABLE (BY OWNER)
13. TRASH RECEPTACLE (BY OWNER)
14. BENCH (BY OWNER)
15. BIKE RACK (BY OWNER)
16. ASPHALT PATCH (SEAL EDGES)
17. CONCRETE PATCH
18. 10' WIDE, 4' HIGH GATE
19. PAVEMENT REPLACEMENT FOR UTILITY TRENCH; MATCH EXISTING; SEAL EDGES
20. PAINT ALL STRIPES WITH NON–SLIP PAINT SUITABLE FOR USE IN WET AREAS; ARCHITECT TO SELECT COLOR
21. "FIRE LANE NO PARKING" SIGN (FIRE DEPT. TO APPROVE SPACING)

THORSON BAKER & Associates, Inc.
Consulting Engineers
3030 West Streetsboro Road
Richfield, Ohio 44286
(330) 659–6688 Ph.
(330) 659–6675 Fax

BRAUN & STEIDL architects
Akron
1041 West Market Street - Akron, OH 44313 - 330.864.7755 fax 330.864.3691
Columbus

EDWARD 'PEEL' COLEMAN CENTER - SPRAY PARK
1400 Sherrick Road S.E. - Canton, Ohio 44707

12-13-13

ISSUED FOR BID

Sheet Issue Date:	12-13-13
Designed:	TBA
Drafted:	TBA
Checked:	MNS

Revisions:

No.	Date	Description

Copyright 2013©
Braun & Steidl Architects

GEOMETRIC PLAN

C-2

11044

Y:\2011\2011-0784\CAD\Civil-Landscape\2011-0784-C2(GEO).dwg Layout1, 12/6/2013 11:10:19 AM, 1:1
12/3/2013 2:55:20 PM

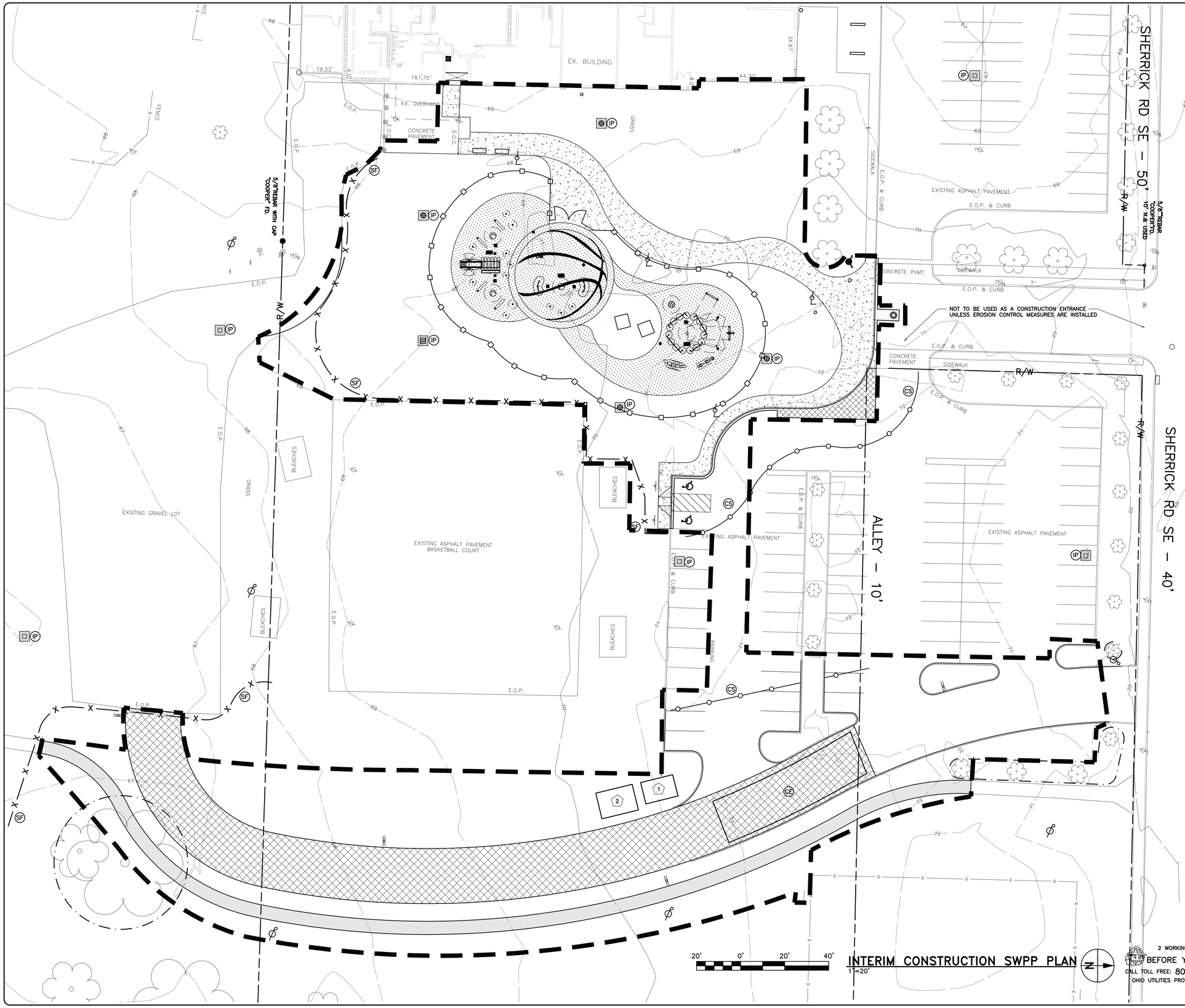

INTERIM CONSTRUCTION SWPP PLAN

EROSION CONTROL NOTES:

1. THE OWNER AND/OR THE CONTRACTOR SHALL MEET WITH STARK SWCD FOR A PRE– CONSTRUCTION MEETING NO LESS THAN 7 DAYS PRIOR TO SOIL DISTURBING ACTIVITY.

2. CONTRACTOR SHALL CONTACT STARK SWCD AT 330–830–7700 (EXT 5) TO SCHEDULE THE PRE–CONSTRUCTION MEETING.

3. ALL APPLICABLE ACTIVITIES AND PRACTICES SHALL COMPLY WITH THE CURRENT EDITION OF OHIO DEPARTMENT OF NATURAL RESOURCE'S RAINWATER AND LAND DEVELOPMENT MANUAL.

LEGEND

- PROPOSED STANDARD DUTY ASPHALT PAVEMENT
- PROPOSED HEAVY DUTY ASPHALT PAVEMENT
- LIMITS OF CONSTRUCTION
- 4' HT CHAIN LINK FENCE
- SF — SILT FENCE
- CS — COMPOST FILTER SOCK
- IP — INLET PROTECTION
- CE — TEMPORARY CONSTRUCTION ENTRANCE
- TREE PROTECTION 4' HT. ORANGE PVC CONSTRUCTION FENCE

KEY NOTES

1. TEMPORARY CONCRETE TRUCK WASHOUT PIT (10'X15'X2') MUST NOT BE WITHIN A DRAINAGE AREA WAY
2. HAZARD WASTE, SANITARY FACILITIES AND VEHICLE MAINTENANCE AND FUELING AREA, THIS AREA MUST NOT BE WITHIN A DRAINAGE AREA WAY
3. USE COMPOST FILTER SOCK IN EXISTING PAVEMENT AREAS WHERE SILT FENCE CANNOT BE USED TO CONTROL SEDIMENT RUN–OFF

2 WORKING DAYS
BEFORE YOU DIG
CALL TOLL FREE: 800–362–2764
OHIO UTILITIES PROTECTION SERVICE

THORSON BAKER & Associates, Inc.
Consulting Engineers
3030 West Streetsboro Road
Richfield, Ohio 44286
(330) 659–6688 Ph.
(330) 659–6675 Fax

BRAUN & STEIDL architects
Akron Columbus
1041 West Market Street - Akron, OH 44313 - 330.864.7755 fax 330.864.3691

EDWARD 'PEEL' COLEMAN CENTER - SPRAY PARK
1400 Sherrick Road S.E. - Canton, Ohio 44707

12-13-13

ISSUED FOR BID

Sheet Issue Date:	12-13-13
Designed:	TBA
Drafted:	TBA
Checked:	MNS

Revisions:
No. Date Description

Copyright 2012
Braun & Steidl Architects

INTERIM CONSTRUCTION SWPP PLAN

C-3

11044

V:\2011\2011-0784-Can\Civil-Landscape\2011-0784-C3 (SWPP).dwg, Layout1, 12/6/2013 11:09:44 AM, 1:1

1/13/2012 2:55:20 PM

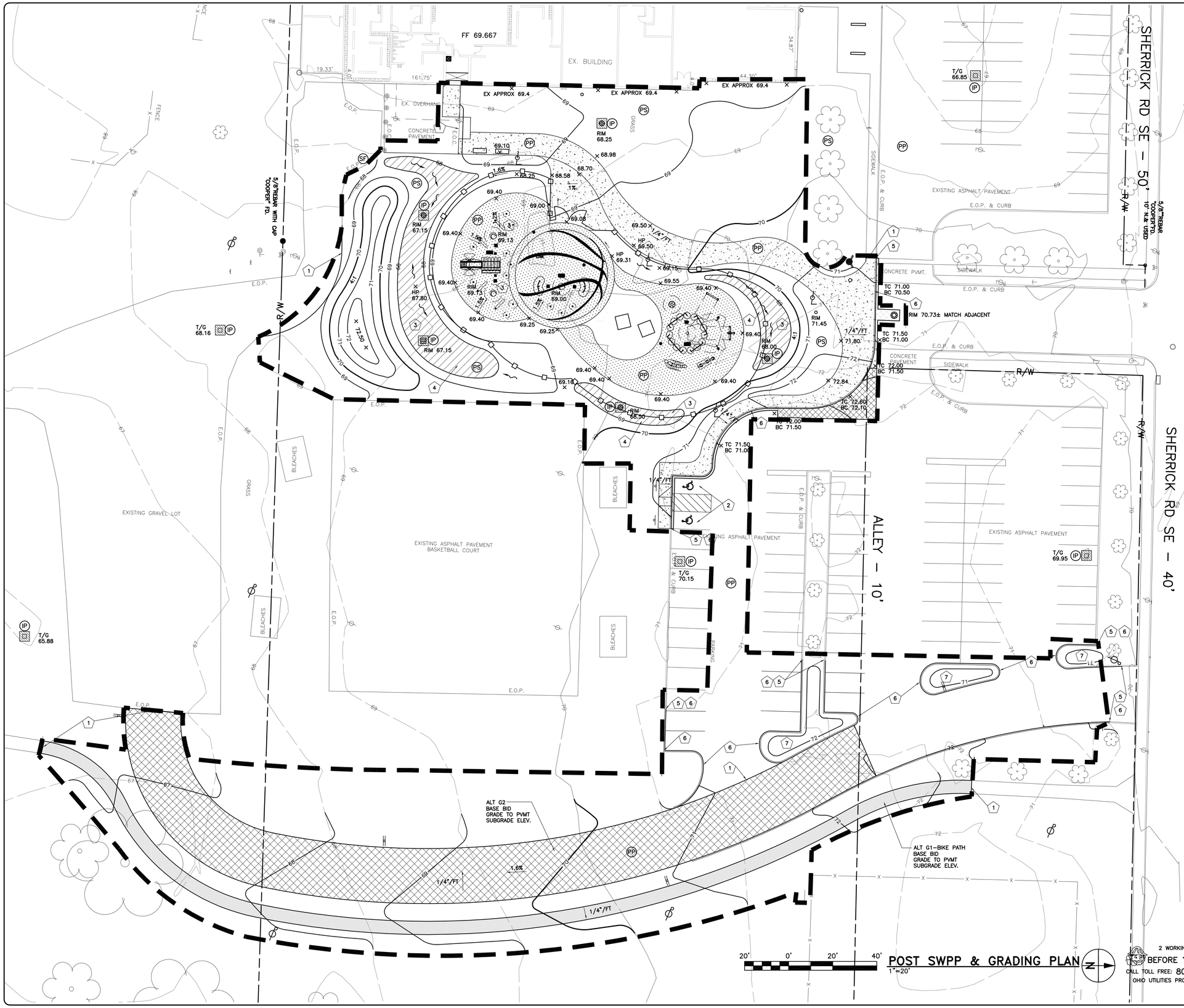

POST SWPP & GRADING PLAN

SEE GRADING NOTES ON SHEET C-5

LEGEND

1051 / 1050	EXISTING CONTOURS
1051 / 1050	PROPOSED CONTOURS
	LIMITS OF CONSTRUCTION
1050.00	PROPOSED SPOT ELEVATIONS
	DRAINAGE FLOW ARROW
TC	TOP OF CURB
BC	BOTTOM OF CURB
IP	INLET PROTECTION
PP	PERMANENT PAVEMENT
PS	PERMANENT SEEDING

KEY NOTES

1. MEET & MATCH EXISTING PAVEMENT ELEVATION
2. SLOPES SHALL NOT EXCEED 2% IN ANY DIRECTION IN ACCESSIBLE PARKING AREA
3. GRADE TO DRAIN TO SWALE
4. NO MOW GRASS TO ACT AS NON–STRUCTURAL BMP AND MOWED NO MORE THAN TWICE PER YEAR.
5. MEET EXISTING CONCRETE CURB
6. TOP OF CURB TO BE 6" ABOVE EXISTING ASPHALT ELEVATION
7. MOUND ISLAND UP 1' ABOVE ADJACENT CURB

NOTE

FOR CONVERSION FROM CITY DATUM TO U.S.G.S. ADD 961.86 TO ELEVATIONS SHOWN PER COOPER SURVEY.

2 WORKING DAYS
BEFORE YOU DIG
CALL TOLL FREE: 800–362–2764
OHIO UTILITIES PROTECTION SERVICE

THORSON BAKER & Associates, Inc.
Consulting Engineers
3030 West Streetsboro Road
Richfield, Ohio 44286
(330) 659–6688 Ph.
(330) 659–6675 Fax

BRAUN & STEIDL architects
Akron
1041 West Market Street - Akron, OH 44313 - 330.864.7755 fax 330.864.3691

EDWARD 'PEEL' COLEMAN CENTER - SPRAY PARK
1400 Sherrick Road S.E. - Canton, Ohio 44707

12-13-13

ISSUED FOR BID

Sheet Issue Date:	12-13-13
Designed:	TBA
Drafted:	TBA
Checked:	MNS

Revisions:
No. Date Description

Copyright 2012
Braun & Steidl Architects

POST SWPP & GRADING PLAN

C-3.1

11044

V:\2011\2011-0794\Cad\Civil-Landscape\2011-0794-C3.1 (GRAD).dwg Layout: 12&20/13 11:11:00 AM, 1:1
1/2/2012 2:55:20 PM

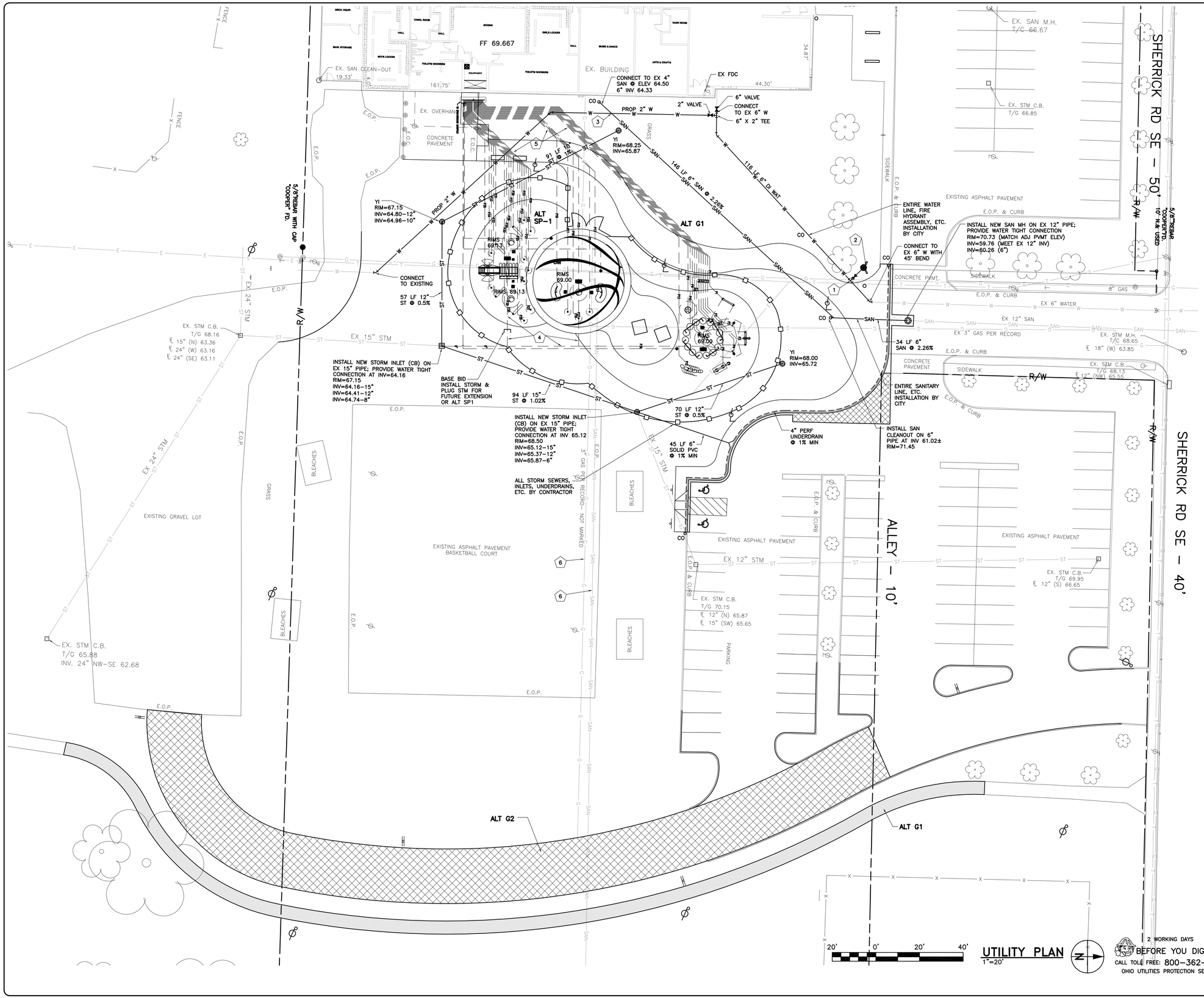

UTILITY PLAN

SEE UTILITY NOTES ON SHEET C-5

LEGEND

E	EXISTING ELECTRIC
G	EXISTING GAS
OVH	EXISTING OVERHEAD LINE
SAN	EXISTING SANITARY
ST	EXISTING STORM
T	EXISTING TELEPHONE
W	EXISTING WATER
E	PROPOSED ELECTRIC
SAN	PROPOSED SANITARY
ST	PROPOSED STORM
T	PROPOSED TELEPHONE
W	PROPOSED WATER
	PROPOSED LIGHT FIXTURE
	ALT E1 PROPOSED LIGHT FIXTURE SEE ELEC. DWG.
	PROPOSED UTILITY POLE BY AEP
	PROPOSED CATCH BASIN/ CURB INLET
	PROPOSED CLEANOUT

KEY NOTES

1. 6" X 6" TEE (BY CITY)
2. FIRE HYDRANT ASSEMBLY (BY CITY)
3. MAINTAIN MIN. 18" VERTICAL CLEARANCE BETWEEN SEWER LINE AND WATER LINE. LOWER WATERLINE AS REQUIRED.
4. FOR COORDINATION OF SPLASH PAD SEWER, SEE SHEET SP3.0
5. FOR COORDINATION OF SPLASH PAD WATER SERVICE, SEE SHEET SP3.1
6. PER CITY/ UTILITY COMMENTS, THIS UTILITY RUN DOES NOT EXIST

2 WORKING DAYS BEFORE YOU DIG
CALL TOLL FREE: 800-362-2764
OHIO UTILITIES PROTECTION SERVICE

THORSON BAKER & Associates, Inc.
Consulting Engineers
3030 West Streetsboro Road
Richfield, Ohio 44286
(330) 659-6688 Ph.
(330) 659-6675 Fax

BRAUN & STEIDL architects
Akron
1041 West Market Street - Akron, OH 44313 - 330.864.7755 fax 330.864.3691
Columbus

THE CITY OF CANTON
WILLIAM J. HEALY II, MAYOR

EDWARD 'PEEL' COLEMAN CENTER - SPRAY PARK
1400 Sherrick Road S.E. - Canton, Ohio 44707

12-13-13

ISSUED FOR BID

Sheet Issue Date:	12-13-13
Designed:	TBA
Drafted:	TBA
Checked:	MNS

Revisions:
No. Date Description

Copyright 2013
Braun & Steidl Architects

UTILITY PLAN

C-4

11044

Y:\2011\2011-0784\CAD\Civil-Landscape\2011-0784-C4 (UTIL).dwg, Layout1, 12/6/2013 11:11:35 AM, 1:1
12/3/2013 2:55:20 PM

DEMOLITION NOTES

1. THE GENERAL CONTRACTOR SHALL NOTIFY O.U.P.S. AT 1-800-362-2764 AND O.G.P.U.P.S. AT 1-800-925-0988 A MINIMUM OF TWO DAYS BEFORE THE START OF CONSTRUCTION.
2. REMOVAL OF STRUCTURES AND OBSTRUCTIONS: BUILDINGS, FOUNDATIONS, STRUCTURES, ASPHALT AND CONCRETE PAVEMENT, AND UTILITIES ABOVE AND BELOW GROUND SHALL BE REMOVED AND DISPOSED OF OFF SITE WITHIN STANDARDS AS OUTLINED WITHIN THE CURRENT OHIO DEPARTMENT OF TRANSPORTATION "CONSTRUCTION AND MATERIAL SPECIFICATIONS" MANUAL UNDER ITEM 202.
3. TREES AND OTHER SITE FEATURES NOTED TO REMAIN SHALL BE PROTECTED THROUGHOUT CONSTRUCTION WITH CONSTRUCTION FENCING. PLACE 4' HT. ORANGE CONSTRUCTION FENCING AT AND AROUND ALL NOTED SITE FEATURES AND/OR THE DRIP LINE OF ALL TREES NOTED TO BE SAVED. DO NOT STORE VEHICLES, EQUIPMENT, OR MATERIALS WITHIN THE PROTECTED AREA. OBTAIN FIELD APPROVAL FROM THE OWNER, ARCHITECT, AND/OR AUTHORIZED OWNER REPRESENTATIVE PRIOR TO ANY TREE REMOVAL. IF NECESSARY, CONTRACTOR WILL RELOCATE TO PROTECT SITE FEATURES. OTHER MEASURES MAY BE REQUIRED BY THE LANDSCAPE ARCHITECT IF ANY DAMAGE TO SUCH ITEMS OR TREES OCCURS. REMOVE FENCING AFTER CONSTRUCTION.
4. ALL EXISTING UTILITY CASTINGS INCLUDING MANHOLES, CATCH BASINS, VALVES, VALVE BOXES, ETC. SHALL REMAIN AND BE ADJUSTED TO PROPOSED GRADES, UNLESS NOTED OTHERWISE. THE GENERAL CONTRACTOR SHALL COORDINATE WORK WITH THE RESPECTIVE UTILITY COMPANIES.
5. ALL EXISTING UTILITY LINES & SERVICES WITHIN THE LIMITS OF CONSTRUCTION SHALL REMAIN AND BE PROTECTED, UNLESS NOTED OTHERWISE. CONTRACTOR SHALL COORDINATE REMOVAL OR RELOCATION WITH THE RESPECTIVE UTILITY COMPANY FOR PROPER CAPPING/SEALING/DISCONNECTING, ETC.
6. THE CONTRACTOR SHALL COORDINATE WORK WITH LOCAL SAFETY DEPARTMENTS TO MAINTAIN TRAFFIC CONTROL.
7. ALL EXISTING UTILITY POLES, LIGHT POLES, ELECTRIC HANDHOLDS, UNDERGROUND WIRING, AND SITE LIGHTING SHALL BE PROTECTED, UNLESS NOTED OTHERWISE. THE CONTRACTOR SHALL COORDINATE WORK WITH THE LOCAL POWER SUPPLY COMPANY.
8. CONTRACTOR SHALL KEEP ALL EXISTING UTILITIES OPERATING DURING DEMOLITION AND CONSTRUCTION AND UNTIL THE NEW SYSTEMS ARE OPERATING PROPERLY. PROVIDE TEMPORARY CONNECTIONS AS REQUIRED.
9. SAW CUT ALL EDGES FULL DEPTH OF PAVEMENT.
10. ALL SIGNS DESIGNATED TO BE REMOVED SHALL BE REINSTALLED AS DIRECTED, OR TURNED OVER TO OWNER.
11. COORDINATE DEMOLITION OF ALL EXISTING ITEMS WITH OTHER DRAWINGS. REMOVE/ABANDON EXISTING UTILITIES, SERVICES, SITE FEATURES AS REQUIRED.
12. SAWCUT EDGES FULL DEPTH OF EXISTING PAVEMENT WHERE NEW PAVEMENT ABUTS EXISTING PAVEMENT.

TRAFFIC CONTROL NOTES

1. ALL TRAFFIC CONTROL DEVICES SHALL BE FURNISHED, ERECTED, MAINTAINED, AND REMOVED BY THE CONTRACTOR IN ACCORDANCE WITH THE OHIO MANUAL OF UNIFORM TRAFFIC CONTROL DEVICES (PART 7 CONSTRUCTION AND MAINTENANCE OPERATIONS). COPIES ARE AVAILABLE FROM THE ODOT, BUREAU OF TRAFFIC, 25 SOUTH FRONT STREET, COLUMBUS, OHIO 43215.
2. STEADY-BURNING, TYPE "C," LIGHTS SHALL BE REQUIRED ON ALL BARRICADES, DRUMS AND SIMILAR TRAFFIC DEVICES IN USE AT NIGHT. CONES ARE NOT PERMITTED TO BE USED FOR NIGHT WORK.
3. ACCESS TO ALL ADJOINING PROPERTIES SHALL BE MAINTAINED AT ALL TIMES.
4. THE CONTRACTOR SHALL BE RESPONSIBLE FOR MAINTAINING MAIL SERVICE IN THE CONSTRUCTION AREA.
5. IT SHALL BE THE RESPONSIBILITY OF THE CONTRACTOR TO ADEQUATELY BARRICADE THE STREET IN THE VICINITY OF THE WORK AREAS UNTIL SUCH TIME AS THE STREET IS OPEN TO TRAFFIC.

ROADWAY AND PAVEMENT NOTES

1. PAVEMENT SECTION BASED ON ASSUMPTIONS, CONTRACTOR TO VERIFY WITH GEOTECHNICAL INVESTIGATION PAID FOR BY THIS CONTRACTOR.
2. WHEN OPEN-CUTTING OF EXISTING PAVEMENT IS PERMITTED, CONTROLLED DENSITY BACKFILL MAY BE USED IN PLACE OF COMPACTED GRANULAR BACKFILL. ASPHALT SURFACES SHALL BE HEAT WELDED.
3. WHERE IT IS NECESSARY TO DISTURB EXISTING PAVEMENTS, THE PAVEMENT SHALL BE SAW CUT IN NEAT, STRAIGHT LINES. THE DEPTH OF THE SAWCUT SHALL BE FULL DEPTH OF PAVEMENT.
4. THE CONTRACTOR SHALL EXERCISE EXTREME CAUTION WHEN EXCAVATING IN THE VICINITY OF EXISTING TREES TO BE PRESERVED, TAKING ALL PRACTICAL MEASURES TO PROTECT AND PRESERVE THEM.
5. ALL EARTHWORK CONSTRUCTION METHODS AND MATERIALS FOR EXCAVATION, EMBANKMENT, SUBGRADE COMPACTION, AND PROOF ROLLING SHALL FOLLOW AND MEET THE CURRENT OHIO DEPARTMENT OF TRANSPORTATION "CONSTRUCTION AND MATERIAL SPECIFICATIONS" MANUAL UNDER ITEMS 203 AND 204.
6. ALL PAVING OPERATIONS AND MATERIALS SHALL CONFORM TO AND MEET THE REQUIREMENTS AS OUTLINED WITHIN THE CURRENT OHIO DEPARTMENT OF TRANSPORTATION "CONSTRUCTION AND MATERIAL SPECIFICATIONS" MANUAL.
7. WALK REPLACEMENT: APPROXIMATE LOCATIONS FOR THE REQUIRED REMOVAL/REPLACEMENT OF EXISTING WALK ARE AS SHOWN ON THE PLAN. WALK REMOVAL/REPLACEMENT LIMITS SHALL TYPICALLY EXTEND TO THE NEAREST EXISTING WALK JOINT. THE EXACT LOCATIONS AND LIMITS OF EXISTING WALK REMOVAL/REPLACEMENT SHALL BE ESTABLISHED AT THE JOB SITE. THE EXISTING WALK SHALL BE REMOVED IN A MANNER THAT WILL NOT DISTURB, DAMAGE OR UNDERMINE ADJACENT WALK, CURB, DRIVES OR DRIVE APRONS INTENDED TO REMAIN. ANY ADJACENT FACILITIES DAMAGED AS A RESULT OF THE CONTRACTOR'S NEGLIGENCE, AS DETERMINED BY THE ENGINEER, AND WHICH ARE NOT OTHERWISE DESIGNATED FOR REPLACEMENT, SHALL BE REPLACED AT THE CONTRACTOR'S EXPENSE. REPLACEMENT WALKS SHALL BE CONSTRUCTED IN ACCORDANCE WITH THE DETAILS CONTAINED HEREON. CURB RAMPS AS SHOWN IN THESE PLANS ARE SUBJECT TO ADJUSTMENT TO MINIMIZE CONFLICTS WITH EXISTING CATCH BASINS, MANHOLES, UTILITY POLES, HYDRANTS OR OTHER SUCH APPURTENANCES.
8. CONCRETE WALKS: ALL CONCRETE WALK SHALL BE A MINIMUM OF 4" THICK AND HAVE A 2" COMPACTED SCREENINGS BED WHICH MEETS THE REQUIREMENTS OF ODOT ITEM 703.10 EXCEPT THAT THE MINIMUM TOTAL PERCENT PASSING THE NO. 100 SIEVE SHALL BE FIVE (5) PERCENT. WHERE THE WALK CROSSES A FLEXIBLE DRIVEWAY, THE THICKNESS SHALL BE INCREASED TO SIX (6) INCHES. TRANSVERSE EXPANSION JOINT FILLER (ODOT ITEM 705.03) SHALL BE CONSTRUCTED AT INTERVALS OF NOT MORE THAN 30 FEET. THE FILLER SHALL BE PLACED AT THE TRANSVERSE DIVISION JOINTS FOR THE FULL DEPTH/WIDTH OF THE CONCRETE WALK AND SHALL BE TRULY NORMAL TO GRADE. THE FINAL SURFACE SHALL BE TEXTURED BY USE OF AN ACCEPTED BROOM SO AS TO PRODUCE A UNIFORM, GRITTY, TRANSVERSE TEXTURE.
9. ALL ROAD SURFACES, BERMS, LAWN AREAS OR RIGHT-OF-WAYS DISTURBED BY CONSTRUCTION OF ANY PART OF THIS IMPROVEMENT ARE TO BE RESTORED COMPLETELY TO THE PRE-CONSTRUCTION CONDITION OR BETTER WHEN ORDERED BY THE LANDSCAPE ARCHITECT AND ALL ITEMS SHALL BE INCLUDED IN THE UNIT PRICES BID.

LAYOUT/GEOMETRY NOTES

1. SEE ARCHITECTURAL DRAWINGS FOR EXACT BUILDING DIMENSIONS FOR LAYOUT.
2. CONTRACTOR IS OBLIGATED TO VERIFY ALL DIMENSIONS ON THE GROUND AND REPORT ANY LAYOUT DISCREPANCIES IMMEDIATELY TO THE OWNER'S REPRESENTATIVE.
3. PRECISE LAYOUT SHALL BE DETERMINED ON THE GROUND AND APPROVED BY THE OWNER'S REPRESENTATIVE.
4. BENCHMARK AND CONTROL POINTS ARE SHOWN ON THE DRAWING. LAYOUT FROM THESE REFERENCE POINTS IS THE RESPONSIBILITY OF THE CONTRACTOR.
5. ± INDICATES APPROXIMATE DIMENSIONS.
6. DO NOT SCALE FROM THIS DRAWING. ALL WRITTEN DIMENSIONS SHALL GOVERN. ALL ANGLES ARE 90° UNLESS OTHERWISE NOTED. DIMENSIONS ARE TO FACE OF CURB AND/OR TO FACE OF BUILDING.
7. SIGNAGE FOR EACH ACCESSIBLE PARKING SPACE TO BE PER CITY REQUIREMENTS.
8. THE CURB AND SIDEWALK RAMPS SHALL HAVE A DETECTABLE WARNING.
9. SEE GRADING PLAN FOR SOIL BORING LOCATIONS.
10. ALL PROPERTY PINS DISTURBED DURING THE COURSE OF CONSTRUCTION SHALL BE RESET AT THE CORRECT LOCATION. COST OF THIS WORK TO BE INCLUDED IN THE UNIT PRICES BID.

GRADING NOTES

1. GRADES/SLOPES SHALL BE STRAIGHT LINE BETWEEN POINT ELEVATIONS AND CONTOURS SHOWN.
2. SPOT ELEVATIONS SHOWN ARE BOTTOM OF CURB UNLESS NOTED OTHERWISE. ALL POINTS SHOWN ARE INTENDED TO BE LOCATED AT PC's, PT's, MIDPOINTS OF CURB RADII, INTERSECTIONS, AND CORNER LOCATIONS. TOP OF CURB ELEVATIONS ARE 6" HIGHER THAN SHOWN.
3. ALL EMBANKMENT UNDER PAVEMENTS AND STRUCTURES SHALL BE COMPACTED WITH SELECT SITE MATERIAL PER ODOT SPEC. 203.
4. ALL AREAS AFFECTED BY SITE WORK, EXCLUDING PAVED, LANDSCAPED AND STRUCTURE AREAS, SHALL BE SEEDED AND MULCHED PER ODOT SPEC. 659.
5. CONTRACTOR SHALL STRIP ANY TOPSOIL AND STOCKPILE PRIOR TO SITE GRADING OPERATION. CONTRACTOR SHALL REPLACE STOCKPILED TOPSOIL TO A THICKNESS OF 6 INCHES PER ODOT SPEC. 653 IN ALL LANDSCAPED AREAS. HAUL EXCESS SOIL OFF-SITE OR BRING IN TOPSOIL UNLESS NOTED OTHERWISE. TOPSOIL SHALL BE DEFINED IN LAWNS AND GRASSES SPECIFICATIONS. IF LAWNS AND GRASSES SPECIFICATIONS IS NOT PROVIDED, TOPSOIL SHALL BE DEFINED PER ODOT 653 AND CONTAIN NO OBJECTS GREATER THAN 2MM IN DIAMETER.
6. SLOPES INDICATED AS PERCENTAGES ARE APPROXIMATE.
7. ANY SLOPES GREATER THAN 2:1 SHALL BE STABILIZED PER ODOT 668 SEEDING AND JUTE MATTING.
8. SEE UTILITY PLAN FOR ADDITIONAL STORM STRUCTURE DATA.
9. PRIOR TO SITE EXCAVATION AND GRADING, THE CONTRACTOR IS TO CREATE A TEMPORARY DIVERSION DITCH OR DITCHES TO PREVENT SITE STORM WATER RUNOFF AND SEDIMENTS FROM ENTERING EXISTING DITCHES AND/OR ADJACENT PROPERTIES. THE TEMPORARY DITCH(ES) ARE TO DRAIN INTO THE TEMPORARY SEDIMENT TRAP. THE TEMPORARY DITCH(ES) ARE TO BE FILLED AND THE GRADES RETURNED TO THEIR ORIGINAL OR PROPOSED ELEVATIONS AND SEEDED PER ODOT SPEC. 659. SEE S.W.P.P. PLAN FOR LOCATION OF TEMPORARY SEDIMENT TRAP(S).
10. THE CONTRACTOR SHALL RESTORE ALL DISTURBED AREAS TO EQUAL OR BETTER CONDITION THAN EXISTED BEFORE CONSTRUCTION. DRAINAGE DITCHES OR WATER COURSES THAT ARE DISTURBED BY CONSTRUCTION SHALL BE RESTORED TO THE GRADES AND CROSS SECTIONS THAT EXISTED BEFORE CONSTRUCTION.
11. NO NON-RUBBER TIRE VEHICLE SHALL BE MOVED ON STREETS. EXCEPTIONS MAY BE GRANTED WHERE SHORT DISTANCES AND SPECIAL CIRCUMSTANCES ARE INVOLVED. GRANTING OF EXCEPTIONS MUST BE IN WRITING AND ANY RESULTING DAMAGE MUST BE REPAIRED TO THE SATISFACTION OF THE MUNICIPAL AUTHORITY.
12. SEE SHEET C-6 & C-7 FOR EROSION CONTROL NOTES & DETAILS.
13. SLOPES SHALL NOT EXCEED 2% IN ANY DIRECTION WITHIN HANDICAP PARKING AREA.
14. EXISTING SOILS ON SITE MAY BE USED AS SUBGRADE MATERIAL IF APPROVED BY THE PROJECT GEOTECHNICAL ENGINEER.

GENERAL UTILITY NOTES

1. EXISTING UTILITIES SHOWN ARE FROM BEST AVAILABLE RECORDS AND FIELD INVESTIGATION, AND ARE NOT NECESSARILY COMPLETE OR EXACT. THE CONTRACTOR IS RESPONSIBLE FOR THE INVESTIGATION, LOCATION, SUPPORT, PROTECTION, AND RESTORATION OF ALL EXISTING UTILITIES AND APPURTENANCES WHETHER SHOWN ON THESE PLANS OR NOT. CONTRACTOR SHALL REPAIR ANY DAMAGE AT NO COST TO THE PROJECT. THE CONTRACTOR SHALL EXPOSE ALL UTILITIES OR STRUCTURES PRIOR TO CONSTRUCTION TO VERIFY THE VERTICAL AND HORIZONTAL LOCATIONS. MAKE SUCH ADJUSTMENTS IN ELEVATIONS AS ARE REQUIRED TO PROVIDE SUFFICIENT CLEARANCE BETWEEN THE EXISTING AND PROPOSED UTILITIES. CALL THE OHIO UTILITIES PROTECTION SERVICE (800) 362-2764 AND THE OIL AND GAS PRODUCERS UNDERGROUND PROTECTION SERVICE (800) 925-0988 AT LEAST TWO (2) WORKING DAYS PRIOR TO COMMENCING WORK.
2. WHEN UNKNOWN OR INCORRECTLY LOCATED UNDERGROUND UTILITIES ARE ENCOUNTERED IN THE RIGHT-OF-WAY DURING CONSTRUCTION, THE CONTRACTOR SHALL IMMEDIATELY NOTIFY THE OWNER, ENGINEER AND THE MUNICIPAL ENGINEER.
3. ALL TRENCHES SHALL BE BACKFILLED OR SECURELY PLATED DURING NONWORKING HOURS.
4. AT UTILITY CROSSINGS WHERE THE EXISTING UTILITY IS EXPOSED IN THE TRENCH, BACKFILL SHALL CONSIST OF COMPACTED GRANULAR MATERIAL IN ACCORDANCE WITH CMS ITEM 603 BETWEEN THE DEEPER AND SHALLOWER PIPE. WHERE PROPOSED UTILITIES CROSS PROPOSED OR EXISTING PAVEMENT AREAS, BACKFILL SHALL BE COMPACTED GRANULAR MATERIAL IN ACCORDANCE WITH CMS ITEM 603 EXTENDING AT LEAST 3 FEET BEYOND THE BACK OF CURB OR EDGE OF PAVEMENT.
5. CONTRACTOR SHALL VERIFY AND COORDINATE SIZE AND LOCATION OF GAS LINE WITH MECHANICAL ENGINEER AND UTILITY COMPANY.
6. ALL DISTURBED AND/OR DAMAGED STORM SEWER PIPES, FIELD TILE AND APPURTENANCES, PAVEMENTS, BERMS AND DITCHES SHALL BE REPAIRED AND/OR REPLACED TO PRE-CONSTRUCTION CONDITION OR BETTER.
7. COORDINATE LAYOUT OF ALL SITE UTILITIES WITH SITE GEOMETRIC PLANS.
8. REMOVE EXISTING ASPHALT/CONCRETE TO ALLOW FOR INSTALLATION OF UTILITIES - SAW CUT ALL EDGES.
9. EXCEPT AS MAY BE MODIFIED SPECIFICALLY BY THESE PLANS, OR LOCAL AUTHORITY REQUIREMENTS, ALL UTILITY WORK AND MATERIALS SHALL BE IN ACCORDANCE WITH THE REQUIREMENTS OF THE OHIO DEPARTMENT OF TRANSPORTATION CONSTRUCTION AND MATERIALS SPECIFICATIONS, RECENT EDITION.

SEWER NOTES (LOCAL AUTHORITY SHALL GOVERN)

1. ROOF DRAINS, FOUNDATION DRAINS, AND OTHER CLEAN WATER CONNECTIONS TO THE SANITARY SEWER SYSTEM ARE PROHIBITED.
2. ALL SEWERS CONSTRUCTED UNDER THIS PLAN SHALL MEET THE REQUIREMENTS OF CMS ITEM 603.
3. THE MINIMUM REQUIREMENTS FOR SANITARY SEWERS SHALL BE PVC PLASTIC SEWER PIPE, ASTM D-3034, SDR 35. SANITARY SEWER LATERALS SHALL BE LAID AT A MINIMUM GRADE OF 1.0% WITH PREMIUM JOINTS.
4. THE MINIMUM REQUIREMENTS FOR STORM DRAIN PIPE, OTHER THAN UNDERDRAINS, SHALL BE REINFORCED CONCRETE PIPE (RCP) PER ODOT ITEM 706.02 OR HDPE PER ODOT ITEM 707.33, AS SPECIFIED.
5. CURB INLETS, MANHOLES, AND CATCH BASINS SHALL BE CHANNELED AS DIRECTED.
6. ALL CATCH BASINS WITHIN PAVEMENT AREAS SHALL HAVE UNDERDRAINS AS DETAILED.
7. ARCHITECTURAL DRAWINGS SHOWING DOWNSPOUT LOCATIONS SHALL GOVERN WHEN IN CONFLICT WITH LOCATIONS SHOWN ON UTILITY PLAN. DOWNSPOUT TEE ELEVATIONS SHALL BE FIELD ADJUSTED IF NECESSARY TO PROVIDE 0.5% MINIMUM SLOPE ON ALL ROOF DRAINS. ALL DOWNSPOUT CONNECTION LINES SHALL BE RUN AT A MINIMUM OF 1% SLOPE INTO THE TEE. ELEVATIONS GIVEN FOR TEES ARE FOR THE BRANCH CONNECTIONS, NOT FOR THE ROOF DRAINS. SEE ARCHITECTS DRAWING FOR DOWNSPOUT BOOT DETAIL.

WATER NOTES (LOCAL AUTHORITY SHALL GOVERN)

1. ALL WATER SERVICE MATERIALS AND INSTALLATIONS SHALL BE IN ACCORDANCE WITH THE CURRENT RULES AND REGULATIONS OF THE GOVERNING WATER AUTHORITY. ALL DUCTILE IRON PIPE SHALL BE MIN. CLASS 53. ALL SERVICE LATERALS SHALL BE TYPE 'K' COPPER.
2. WATER SERVICE SHALL BE LAID WITH A MINIMUM OF 5'-0" FROM THE FINISHED GRADE TO THE TOP OF THE WATER MAIN.
3. MINIMUM CLEARANCE BETWEEN SANITARY SEWER AND WATER LINES SHALL BE 10' HORIZONTAL OR 1'-6" VERTICAL OUTSIDE OF PIPE.
4. ALL VALVES, HYDRANTS, BACKFLOW PREVENTION, AND OTHER APPURTENANCES SHALL BE IN ACCORDANCE WITH THE SPECIFICATIONS OF THE WATER AUTHORITY AND LOCAL FIRE AUTHORITY.
5. THE CONTRACTOR SHALL NOTIFY THE LOCAL WATER AUTHORITY AT LEAST TWO WORKING DAYS BEFORE TAPPING THE EXISTING MAIN.
6. CONTRACTOR TO PROVIDE MINIMUM 12" VERTICAL CLEARANCE BETWEEN OUTSIDE OF STORM AND OUTSIDE OF WATER AT ALL LOCATIONS. WATER SHALL BE DEFLECTED OR FITTINGS SHALL BE PROVIDED TO MAINTAIN STANDARD CLEARANCE. WATER SHALL CROSS BENEATH STORM IF 3.5' OF COVER CAN NOT BE MAINTAINED.
7. THE FIRE PROTECTION CONTRACTOR/DESIGNER MUST VERIFY ACTUAL WATER FLOWS AT THE SITE PRIOR TO DESIGNING THE FIRE PROTECTION SYSTEM.

ONE-FOOT MINIMUM VERTICAL AND HORIZONTAL CLEARANCE MUST BE MAINTAINED BETWEEN DEO'S EXISTING PIPELINE(S) AND ALL OTHER IMPROVEMENTS. IT IS THE CONTRACTOR'S RESPONSIBILITY TO MAINTAIN THE LATERAL AND SUBJACENT SUPPORT OF DEO'S PIPELINE(S), IN COMPLIANCE TO 29 CFR, PART 1926, SUBPART P, (SAFE EXCAVATION & SHORING). EXTREME CARE SHOULD BE TAKEN NOT TO HARM ANY DEO FACILITY OR APPURTENANCE. NOTIFY DEO IMMEDIATELY IF ANY HARM HAS BEEN INFLICTED UPON DEO'S FACILITIES (PIPELINES, ETC.) OR APPURTENANCES THERETO (PIPE COATING, TRACER WIRE, CATHODIC PROTECTION WIRES & DEVICES, TEST SITES, VALVE BOXES, ETC.).

PLANTING NOTES AND SPECIFICATIONS

1. UNLESS OTHERWISE DIRECTED, CONTRACTOR SHALL PROTECT ALL TREES SCHEDULED TO REMAIN. FENCE THOSE WHICH MAY RISK DAMAGE FROM CONSTRUCTION EQUIPMENT OR WORK.
2. ALL TREES WHICH ARE TO BE REMOVED SHALL BE REMOVED IN A MANNER WHICH WILL NOT INJURE PLANT MATERIAL SCHEDULED TO REMAIN. STUMPS ARE TO BE COMPLETELY REMOVED AND HAULED OFF SITE. NO BURIAL OR BURNING WILL BE PERMITTED. STUMPS WHICH ARE NOT IN THE PATH OF PROPOSED PAVEMENTS, STRUCTURES OR OTHER SIMILAR IMPROVEMENTS MAY BE GROUND IN PLACE.
3. THE GENERAL CONTRACTOR WILL PROVIDE AND PLACE 9" OF TOPSOIL. THE LANDSCAPE CONTRACTOR IS RESPONSIBLE FOR ALL FINE GRADING RELATING TO HIS WORK (WHEN APPLICABLE).
4. TREES & VEGETATION WITHIN LIMITS OF CONSTRUCTION SHALL BE CLEARED AND GRUBBED UNLESS NOTED OTHERWISE.
5. PROVIDE POSITIVE DRAINAGE AWAY FROM ALL BUILDINGS TO PREVENT PONDING OF WATER. DO NOT RAISE FINISHED GRADES ABOVE FINISHED FLOOR ELEVATIONS.
6. IF THE QUALITY OR QUANTITY OF ON-SITE TOPSOIL STOCKPILED IS INSUFFICIENT TO COMPLETE WORK, PROVIDE IMPORTED TOPSOIL. OBTAIN RIGHTS AND PAY ALL COSTS FOR IMPORTED TOPSOIL MATERIAL.
7. PROPOSED TOPSOIL SHALL BE ACCEPTABLE TO THE LANDSCAPE ARCHITECT AND SOILS TESTING FIRM.
8. THE LANDSCAPE CONTRACTOR IS RESPONSIBLE FOR ALL CLEAN-UP ASSOCIATED WITH ITS CONSTRUCTION PROCEDURE.

SITE NOTES
N.T.S.

2 WORKING DAYS
BEFORE YOU DIG
CALL TOLL FREE: 800-362-2764
OHIO UTILITIES PROTECTION SERVICE

THORSON BAKER & Associates, Inc.
Consulting Engineers
3030 West Streetsboro Road
Richfield, Ohio 44286
(330) 659-6688 Ph.
(330) 659-6675 Fax

BRAUN & STEIDL architects
Akron
1041 West Market Street - Akron, OH 44313 - 330.864.7755 fax 330.864.3691
Columbus

THE CITY OF CANTON
WILLIAM J. HEALY II, MAYOR

EDWARD 'PEEL' COLEMAN CENTER - SPRAY PARK
1400 Sherrick Road S.E. - Canton, Ohio 44707

12-13-13
ISSUED FOR BID

Sheet Issue Date:	12-13-13
Designed:	TBA
Drafted:	TBA
Checked:	MNS

Revisions:
No. Date Description

Copyright - 2012
Braun & Steidl Architects

SITE NOTES

C-5

11044

Y:\2011\2011-0784\Cad\Civil Landscape\2011-0784-C5 (NOTES).dwg, Layout1, 12/6/2013 11:11:59 AM, 1:1
12/3/2012 2:55:30 PM

GENERAL EROSION AND SEDIMENT CONTROL NOTES:

THE CONTRACTOR SHALL PROVIDE DOCUMENTATION TO STARK SOIL & WATER FOR ALL FILL BROUGHT TO THE SITE OR SPOIL TRUCKED OFF SITE STATING THAT THE OFFSITE AREAS MEET STORMWATER POLLUTION PREVENTION REQUIREMENTS.

EROSION CONTROL SHALL CONSIST OF TEMPORARY CONTROL MEASURES AS DETAILED ON THE PLANS OR ORDERED BY THE GOVERNING AGENCY DURING THE LIFE OF THE CONTRACT TO CONTROL SOIL EROSION AND SEDIMENTATION THROUGH USE OF EROSION CONTROL BEST MANAGEMENT PRACTICES (BMP'S).

TEMPORARY EROSION AND SEDIMENT CONTROL ITEMS, THE LOCATION AND SIZE OF WHICH ARE DETAILED ON THE PLANS, SHALL BE INSTALLED BY THE CONTRACTOR PRIOR TO COMMENCEMENT OF ANY CLEARING OR EARTHWORK OPERATIONS. CONDITIONS THAT DEVELOP DURING CONSTRUCTION THAT WERE NOT FORESEEN DURING DESIGN STAGE; THAT REQUIRE ADDITIONAL OR MODIFIED TEMPORARY OR PERMANENT BMP'S SHALL BE APPROVED BY THE DESIGN ENGINEER AND REFLECTED ON THE REVISED SWP3.

SEDIMENT PONDS, SEDIMENT TRAPS, AND PERIMETER SEDIMENT CONTROLS, SHALL BE IMPLEMENTED AS THE FIRST STEP OF GRADING AND WITHIN 7 DAYS FROM THE START OF GRUBBING. THEY SHALL CONTINUE TO FUNCTION UNTIL DISTURBED AREAS ARE RE-ESTABLISHED WITH TEMPORARY VEGETATION. NO SEDIMENT CONTROLS SHALL BE PLACED IN A STREAM.

TRENCH DEWATERING OR GROUND WATER, WHICH CONTAINS SEDIMENT SHALL PASS THROUGH A SEDIMENT SETTLING POND OR EQUALLY EFFECTIVE SEDIMENT CONTROL DEVICE. ALTERNATIVES MAY INCLUDE DEWATERING INTO SUMP PIT, FILTER BAG OR EXISTING VEGETATED UPSLOPE AREA. SEDIMENT LADEN WATER SHALL NOT BE DISCHARGED TO STREAMS OR THE STORM SEWER SYSTEM.

THE SWP3, NOTES AND DETAILED DRAWINGS ARE INTENDED TO SERVE AS BASIC GUIDELINES. ALL EROSION CONTROL PRACTICES SHALL MEET THE STANDARDS AND SPECIFICATIONS OF THE ODNR RAINWATER AND LAND DEVELOPMENT MANUAL.

ADDITIONAL EROSION CONTROL BMP'S MAY BE MANDATED BY THE GOVERNING AGENCY AT ANY TIME DURING THIS PROJECT AS UNFORESEEN SITUATIONS MAY ARISE THAT WARRANT FURTHER EROSION AND SEDIMENT CONTROL PRACTICES.

CONSTRUCT IN ACCORDANCE WITH THESE PLANS, THE OHIO DEPARTMENT OF TRANSPORTATION (ODOT) STANDARD CONSTRUCTION DRAWING MC-11, AND THE OHIO WATER MANAGEMENT AND SEDIMENT CONTROL MANUAL FOR URBANIZING AREAS. THE IMPLEMENTATION OF SOIL EROSION AND SEDIMENT CONTROL SHALL ALSO CONFORM TO THE REQUIREMENTS OF LOCAL EROSION AND SEDIMENT CONTROL REGULATIONS. IF CONFLICTS EXIST REGARDING THE SOIL AND SEDIMENT CONTROL PRACTICES, THE MORE RESTRICTIVE SHALL APPLY.

CONSTRUCTION MUST COMPLY WITH ALL LOCAL EROSION AND SEDIMENT CONTROL REGULATIONS. DISTURBED AREAS REMAINING DORMANT FOR OVER ONE YEAR OR AT FINAL GRADE, WILL HAVE PERMANENT EROSION CONTROLS APPLIED WITHIN SEVEN DAYS.

CLEARING AND GRUBBING

LIMITS OF CLEARING AND GRADING SHALL BE CLEARLY MARKED ON THE SITE WITH SIGNAGE, FLAGGING AND/OR CONSTRUCTION FENCING.

THE CONTRACTOR SHALL LIMIT THE SURFACE AREA OF ERODABLE EARTH MATERIAL EXPOSED BY EXCAVATION, BORROW, AND FILL OPERATIONS AND PROVIDE IMMEDIATE PERMANENT OR TEMPORARY CONTROL MEASURES TO PREVENT CONTAMINATION OF ADJACENT STREAMS OR OTHER WATER COURSES, LAKES, PONDS, WETLANDS OR OTHER AREAS OF WATER IMPOUNDMENT.

CONSTRUCTION ENTRANCE

A STONED CONSTRUCTION ENTRANCE SHALL BE INSTALLED FOR ALL INGRESS & EGRESS TO THE SITE. THE MINIMUM DIMENSIONS OF THE DRIVE SHALL BE 20 FT. WIDE AND 70 FT. LONG. THE STONE SHALL BE 6 INCHES DEEP WITH AN UNDERLAIN GEOTEXTILE FABRIC. THE DRIVE SHALL BE INSTALLED PRIOR TO ANY CLEARING AND GRUBBING. SEDIMENTS SHALL BE REMOVED FROM ROADWAYS DAILY.

STABILIZATION

PERMANENT AND TEMPORARY STABILIZATION ARE DEFINED IN PART VII OF THE OEPA AUTHORIZATION FOR FOR STORM WATER DISCHARGES ASSOCIATED WITH CONSTRUCTION ACTIVITY UNDER THE NATIONAL POLLUTANT DISCHARGE ELIMINATION SYSTEM
OHIO EPA PERMIT NO. OH000003 EFFECTIVE DATE 4/21/08 – EXPIRATION DATE 4/20/13
DISTURBED AREAS MUST BE STABILIZED AS SPECIFIED IN THE FOLLOWING TABLES BELOW:

TABLE 1: PERMANENT STABILIZATION

AREA REQUIRING PERMANENT STABILIZATION	TIME FRAME TO APPLY EROSION CONTROL
ANY AREA THAT WILL LIE DORMANT FOR ONE YEAR OR MORE	WITHIN SEVEN DAYS OF THE MOST RECENT DISTURBANCE
ANY AREA WITHIN 50 FT. OF A STREAM AND AT FINAL GRADE	WITHIN TWO DAYS OF REACHING FINAL GRADE
ANY OTHER AREAS AT FINAL GRADE	WITHIN SEVEN DAYS OF REACHING FINAL GRADE WITHIN THAT AREA

DITCHES WITH SLOPES GREATER THAN 1.5% SHALL HAVE EROSION CONTROL BLANKETS OR MATTING INSTALLED AS PART OF STABILIZATION MEASURES.

EROSION CONTROL BLANKETS SHALL BE USED TO AID IN ESTABLISHING VEGETATION ON DISTURBED SLOPES STEEPER THAN 6%.

SIDE SLOPES OF ROADS AND DRIVES SHALL BE SEEDED AND BLANKETED IMMEDIATELY UPON COMPLETION.

SEEDING AND MULCHING: ALL SITE AREAS NOT OTHERWISE COVERED BY PROPOSED BUILDINGS, PAVEMENTS, OR LANDSCAPE PLANTINGS SHALL BE SEEDED AND MULCHED IN ACCORDANCE WITH THE SPECIFICATIONS. CONTRACTOR TO COORDINATE WITH THE LANDSCAPE PLAN.

A SITE IS NOT CONSIDERED TO BE STABLE UNTIL THE FOLLOWING ITEMS ARE COMPLETED:

1) A PERENIAL, VEGETATIVE COVER (OR OTHER PERMANENT STABILIZATION PRACTICE) HAS GROWN TO A 75% DENSITY THROUGHOUT THE ENTIRE DISTURBED AREA.
2) ALL TEMPORARY EROSION AND SEDIMENT CONTROLS HAVE BEEN REMOVED AND DISPOSED OF PROPERLY.
3) ALL TRAPPED SEDIMENT HAS BEEN PERMANENTLY STABILIZED TO PREVENT FURTHER EROSION OR RE-SUSPENSION.
4) ALL CONSTRUCTION ACTIVITIES HAVE CEASED.

TEMPORARY SEEDING

SEEDING AREAS SHALL BE INSPECTED AND WHERE THE SEED HAS NOT PRODUCED 80% COVER SHALL BE RESEEDED AS NECESSARY BY THE CONTRACTOR. AREAS SHALL BE STABILIZED WITH MULCH WHEN CONDITIONS PROHIBIT SEEDING.

STRAW MULCHING SHALL BE APPLIED AT A RATE 2-3 STANDARD 45 LB. BALES PER 1000 SQ.FT. OF DISTURBED AREA OR 2 TONS PER ACRE. ALL HYDROSEEDING MUST BE STRAW MULCHED ACCORDING TO THE ABOVE SPECIFICATIONS UNLESS IT IS WATERED WEEKLY.

ALL DETENTION PONDS, RETENTION PONDS, WATER QUALITY STRUCTURES, SEDIMENT PONDS, SEDIMENT TRAPS, EARTHEN DIVERSIONS OR EMBANKMENTS SHALL BE SEEDED AND MULCHED WITHIN 7 DAYS OF COMPLETED CONSTRUCTION.

TABLE 2: TEMPORARY STABILIZATION

AREA REQUIRING TEMPORARY STABILIZATION	TIME FRAME TO APPLY EROSION CONTROL
ANY DISTURBED AREAS WITHIN 50 FT. OF A STREAM AND NOT AT FINAL GRADE	WITHIN TWO DAYS OF THE MOST RECENT DISTURBANCE IF THE AREA WILL REMAIN IDLE FOR MORE THAN 14 DAYS
FOR ALL CONSTRUCTION ACTIVITIES, ANY DISTURBED AREAS THAT WILL BE DORMANT FOR MORE THAN 21 DAYS BUT LESS THAN ONE YEAR, AND NOT WITHIN 50 FT. OF STREAM	WITHIN SEVEN DAYS OF THE MOST RECENT DISTURBANCE WITHIN THE AREA FOR RESIDENTIAL SUBDIVISIONS, DISTURBED AREAS MUST BE STABILIZED AT LEAST SEVEN DAYS PRIOR TO TRANSFER OF PERMIT COVERAGE FOR THE INDIVIDUAL LOT(S)
DISTURBED AREAS THAT WILL BE IDLE OVER WINTER	PRIOR TO ONSET OF WINTER WEATHER (NOV.1) STRAW MULCH 2 TO 3 BALES PER 1000 SQ.FT. AND OR 2 TONS PER ACRE.

WINTERIZATION – ANY DISTURBED AREA THAT IS NOT GOING TO BE WORKED FOR 21 DAYS OR MORE MUST BE SEEDED AND MULCHED BY NOVEMBER 1 OR MUST HAVE A DORMANT SEEDING OR MULCH COVER APPLIED BETWEEN NOVEMBER 1 AND MARCH 1.

WHEN SEASONAL CONDITIONS PROHIBIT THE APPLICATION OF TEMPORARY OR PERMANENT SEEDING, NON-VEGETATIVE SOIL STABILIZATION PRACTICES SUCH AS MULCHING AND MATTING SHALL BE USED.

MAINTENANCE

ALL TEMPORARY AND PERMANENT CONTROL PRACTICES SHALL BE MAINTAINED AND REPAIRED AS NEEDED TO ENSURE CONTINUED PERFORMANCE OF THEIR INTENDED FUNCTION. ALL SEDIMENT CONTROL PRACTICES MUST BE MAINTAINED IN A FUNCTIONAL CONDITION UNTIL ALL UP SLOPE AREAS THEY CONTROL ARE PERMANENTLY STABILIZED. THE CONTRACTOR SHALL COMPLY WITH THE MAINTENANCE SCHEDULE INCLUDED IN THE APPROVED PLANS FOR THE PROPOSED EROSION CONTROLS. A WRITTEN DOCUMENT CONTAINING THE SIGNATURES OF ALL CONTRACTORS AND SUB-CONTRACTORS INVOLVED IN THE IMPLEMENTATION OF THE BMPS MUST BE MAINTAINED AS PROOF ACKNOWLEDGING THAT THEY REVIEWED AND UNDERSTAND THE CONDITIONS AND RESPONSIBILITIES OF THE SWP3.

INSPECTION

ALL STORMWATER CONTROLS ON THE SITE ARE INSPECTED AT LEAST ONCE EVERY SEVEN CALENDAR DAYS AND WITHIN 24 HOURS AFTER ANY STORM EVENT GREATER THAN ONE-HALF INCH OF RAIN PER 24 HOUR PERIOD. A WRITTEN RECORD DOCUMENTING THE INSPECTION AND THE RESULTS OF THESE INSPECTIONS MUST BE CREATED AND MAINTAINED ON-SITE WITH THE SWP3. DISTURBED AREAS AND AREAS USED FOR STORAGE OF MATERIALS THAT ARE EXPOSED TO PRECIPITATION SHALL BE INSPECTED FOR EVIDENCE OF OR THE POTENTIAL FOR, POLLUTANTS ENTERING THE EROSION AND SEDIMENT CONTROL MEASURES IDENTIFIED IN THE SWP3 SHALL BE OBSERVED TO ENSURE THAT THOSE ARE OPERATING CORRECTLY. DISCHARGE LOCATIONS SHALL BE INSPECTED TO ASCERTAIN WHETHER EROSION AND SEDIMENT CONTROL MEASURES ARE EFFECTIVE IN PREVENTING SIGNIFICANT IMPACTS TO THE RECEIVING WATERS. LOCATIONS WHERE VEHICLES ENTER OR EXIT THE SITE SHALL BE INSPECTED FOR EVIDENCE OF OFF-SITE VEHICLE TRACKING.

I. WHEN PRACTICES REQUIRE REPAIR OR MAINTENANCE.
IF THE INSPECTION REVEALS THAT A CONTROL PRACTICE IS IN NEED OF REPAIR OR MAINTENANCE, WITH EXCEPTION OF A SEDIMENT SETTLING POND, IT MUST BE REPAIRED OR MAINTAINED WITHIN THREE DAYS OF INSPECTION. SEDIMENT SETTLING PONDS MUST BE REPAIRED OR MAINTAINED WITHIN 10 DAYS OF THE INSPECTION.

II. WHEN PRACTICES FAIL TO PROVIDE THEIR INTENDED FUNCTION.
IF THE INSPECTION REVEALS THAT A CONTROL PRACTICE FAILS TO PERFORM ITS INTENDED FUNCTION AND THAT ANOTHER, MORE APPROPRIATE CONTROL PRACTICE IS REQUIRED, THE SWP3, MUST BE AMENDED AND THE NEW CONTROL PRACTICE MUST BE INSTALLED WITHIN 10 DAYS OF INSPECTION.

III. WHEN PRACTICES DEPICTED ON THE SWP3 ARE NOT INSTALLED.
IF THE INSPECTION REVEALS THAT A CONTROL PRACTICE HAS NOT BEEN IMPLEMENTED IN ACCORDANCE WITH THE SWP3. THE SWP3 MUST BE AMENDED AND THE NEW CONTROL PRACTICE MUST BE INSTALLED WITHIN 10 DAYS OF THE INSPECTION. IF THE INSPECTION REVEALS THAT THE PLANNED CONTROL PRACTICE IS NOT NEEDED, THE RECORD MUST CONTAIN A STATEMENT OF EXPLANATION AS TO WHY THE CONTROL PRACTICE IS NOT NEEDED.

WASTE DISPOSAL

CONTAINERS (e.g., DUMPSTERS, DRUMS) SHALL BE AVAILABLE FOR DISPOSAL OF DEBRIS, TRASH, HAZARDOUS OR PETROLEUM WASTES. ALL CONTAINERS MUST BE COVERED AND LEAK-PROOF. ALL WASTE MATERIAL SHALL BE DISPOSED OF AT FACILITIES APPROVED FOR THE PERTINENT MATERIAL.

CLEAN HARD FILL

BRICKS, HARDENING CONCRETE, AND SOIL WASTE SHALL BE FREE FROM CONTAMINATION WHICH MAY LEACH CONSTITUENTS TO WATERS OF THE STATE.

CLEAN CONSTRUCTION WASTES THAT WILL BE DISPOSED INTO THE PROPERTY, SHALL BE SUBJECT TO ANY LOCAL PROHIBITIONS FROM THIS TYPE OF DISPOSAL.

CONSTRUCTION & DEMOLITION DEBRIS

ALL CONSTRUCTION & DEMOLITION DEBRIS (C&DD) WASTE SHALL BE DISPOSED OF IN AN OHIO EPA APPROVED C&DD LANDFILL AS REQUIRED BY OHIO REVISED CODE (ORC) 3714. CONSTRUCTION DEBRIS MAY BE DISPOSED OF ON-SITE, BUT DEMOLITION DEBRIS MUST BE DISPOSED IN A OHIO EPA APPROVED LANDFILL. ALSO, MATERIALS WHICH CONTAIN ASBESTOS MUST COMPLY WITH AIR POLLUTION REGULATIONS (SEE OHIO ADMINISTRATIVE CODE (OAC) 3745-20).

CONSTRUCTION CHEMICAL COMPOUNDS

AREA SHALL BE DESIGNATED FOR MIXING OR STORAGE OF COMPOUNDS SUCH AS FERTILIZERS, LIME ASPHALT, OR CONCRETE, THESE DESIGNATED AREAS SHALL BE LOCATED AWAY FROM WATERCOURSES, DRAINAGE DITCHES, FIELD DRAINS, OR OTHER STORMWATER DRAINAGE AREA.

EQUIPMENT FUELING & MAINTENANCE

EQUIPMENT FUELING & MAINTENANCE SHALL BE IN DESIGNATED AREAS ONLY.

A SPILL PREVENTION CONTROL AND COUNTERMEASURES

A SPILL PREVENTION CONTROL AND COUNTERMEASURES (SPCC) PLAN MUST BE DEVELOPED FOR SITES WITH ONE ABOVE-GROUND STORAGE TANK OF 660 GALLONS OR MORE, TOTAL ABOVE-GROUND STORAGE OF 1,330 GALLONS, OR BELOW-GROUND STORAGE OF 4,200 GALLONS OF FUEL.

CONCRETE WASH WATER

ALL DESIGNATED CONCRETE WASHOUT AREAS SHALL BE LOCATED AWAY FROM WATERCOURSES, DRAINAGE DITCHES, FIELD DRAINS, OR OTHER STORMWATER DRAINAGE AREAS.

CONTAMINATED SOILS

ALL CONTAMINATED SOIL MUST BE TREATED AND/OR DISPOSED IN OHIO EPA APPROVED SOLID WASTE MANAGEMENT FACILITIES OR HAZARDOUS WASTE TREATMENT, STORAGE OR DISPOSAL FACILITIES (TSDFs).

SPILL REPORTING REQUIREMENTS

SPILL ON PAVEMENT SHALL BE ABSORBED WITH SAWDUST, KITTY LITTER, OR OTHER ABSORBANT MATERIAL AND DISPOSED OF WITH THE TRASH AT A LICENSED LANDFILL. HAZARDOUS OR INDUSTRIAL WASTES SUCH AS MOST SOLVENTS, GASOLINE, OIL-BASED PAINTS AND CEMENT CURING COMPOUNDS REQUIRE SPECIAL HANDLING. SPILLS SHALL BE REPORTED TO OHIO EPA (1-800-282-9378) WITHIN ONE HOUR OF DISCOVERY OF THE RELEASE. THE CONTRACTOR SHALL HAVE ON-SITE A 20 GALLON OVER PACK SPILL KIT BY EXCEL EQUIPMENT OR APPROVED EQUAL AT THE SITE NEXT TO THE DESIGNATED MAINTENANCE REPAIR AND FUELING AREA THROUGHOUT CONSTRUCTION. A RESPONSE GUIDELINE BOOK SHALL BE SUPPLIED BY THE MANUFACTURER. THIS BOOK SHALL BE POSTED AT THE SITE. THIS INFORMATION SHALL BE POSTED AT THE SITE.
THE CONTRACTOR SHALL CONTACT THE OHIO EPA AT 800-282-9378, THE LOCAL FIRE DEPARTMENT, AND THE LOCAL EMERGENCY PLANNING COMMITTEE (440-951-5252) IN THE EVENT OF A PETROLEUM SPILL (>25 GALLONS) OR THE PRESENCE OF SHEEN WITHIN 30 MINUTES OF A SPILL 25 GALLONS OR MORE. THIS INFORMATION MUST BE POSTED AT THE SITE. THE CONTRACTOR SHALL SUBMIT A SPILL PREVENTION CONTROL AND COUNTER MEASURES (SPCC) PLAN TO CUYAHOGA SOIL AND WATER CONSERVATION DISTRICT FOR APPOVAL. CONSTRUCTION SHALL NOT START UNTIL AFTER PLANS ARE APPROVED BY CUYAHOGA SOIL & WATER CONSERVATION DISTRICT.

OPEN BURNING

OPEN BURNING IS NOT PERMITTED.

DUST CONTROLS/SUPPRESSANTS

CONTRACTOR SHALL CONTROL DUST AND WIND BORN PARTICLES ON THE SITE FROM START OF CONSTRUCTION TILL STABILIZATION OF THE SITE. CONTROLS SHALL BE USED 24 HOURS A DAY AS NECESSARY TO ALLEVIATE ANY NUISANCE.

DUST CONTROLS MUST BE USED IN ACCORDANCE WITH THE MANUFACTURERS SPECIFICATIONS AND NOT BE APPLIED IN A MANNER, WHICH WOULD RESULT IN A DISCHARGE TO THE WATERS OF THE STATE. ISOLATION DISTANCES FROM BRIDGES, CATCH BASINS, AND OTHER DRAINAGE WAYS MUST BE OBSERVED. APPLICATION (EXCLUDING WATER) MAY NOT OCCUR WHEN PRECIPITATION IS IMMINENT AS NOTED IN THE SHORT TERM FORECAST. USED OIL MAY NOT BE USED AS A DUST SUPPRESSANT.

STREAM CROSSINGS

STREAM CROSSINGS SHALL BE CONSTRUCTED ENTIRELY OF STONE, ROCK, OR CLEAN RECYCLED CONCRETE. SOIL OR EARTHEN MATERIAL MAY NOT BE USED. A 20 FT. STONE APRON ON EITHER SIDE OF THE STREAM SHALL BE CONSTRUCTED TO PREVENT LOCALIZED SEDIMENTATION. ALL DISTURBED AREAS OF THE BANK WITHIN 50 FT. OF THE STREAM SHALL BE STABILIZED WITH SEED AND MULCH WITHIN 2 DAYS OF THE DISTURBANCE.

PERMITS

THE CONDITIONS OF THE NPDES CONSTRUCTION STORM WATER GENERAL PERMIT SHALL BE MET DURING ALL STAGES OF CONSTRUCTION.

SITE CONDITIONS

EXISTING: COMMERCIAL

PROPOSED: COMMERCIAL

TOTAL SITE AREA DISTURBED: 1.46 Ac.

PRE-DEVELOPMENT: PERVIOUS = 1.13 Ac.
IMPERVIOUS = 0.33 Ac.

POST-DEVELOPMENT: PERVIOUS = 0.93 Ac.
IMPERVIOUS = 0.53 Ac.

PERMANENT STABILIZATION OF CONVEYANCE CHANNELS

OPERATORS SHALL UNDERTAKE SPECIAL MEASURES TO STABILIZE CHANNELS AND OUTFALLS AND PREVENT EROSIVE FLOWS. MEASURES MAY INCLUDE SEEDING, DORMANT SEEDING (AS DEFINED IN THE LATEST EDITION OF ODNR RAINWATER AND LAND DEVELOPMENT MANUAL), MULCHING, EROSION CONTROL MATTING, SODDING, RIPRAP NATURAL CHANNEL DESIGN WITH BIO ENGINEERING TECHNIQUES OR ROCK CHECK DAMS.

TIMING

SEDIMENT CONTROL STRUCTURES SHALL BE FUNCTIONAL THROUGHOUT THE COURSE OF EARTH DISTURBING ACTIVITY. SEDIMENT BASINS AND PERIMETER SEDIMENT BARRIERS SHALL BE IMPLEMENTED PRIOR TO GRADING AND WITHIN SEVEN DAYS FROM THE START OF GRUBBING. THEY SHALL CONTINUE TO FUNCTION UNTIL THE SLOPE DEVELOPMENT AREA IS PERMANENTLY RESTABILIZED. AS CONSTRUCTION PROGRESSES AND THE TOPOGRAPHY IS ALTERED, APPROPRIATE CONTROLS MUST BE CONSTRUCTED TO ADDRESS THE CHANGING DRAINAGE PATTERNS.

SILT FENCE & DIVERSIONS

SHEET FLOW RUNOFF FROM DENUDED AREAS SHALL BE INTERCEPTED BY SILT FENCE OR DIVERSIONS TO PROTECT ADJACENT PROPERTIES AND WATER RESOURCES FROM SEDIMENT TRANSPORTED VIA SHEET FLOW. WHERE INTENDED TO PROVIDE SEDIMENT CONTROL, SILT FENCES SHALL BE PLACED ON A LEVEL CONTOUR. THE EPA PERMIT No. OHC000002 DOES NOT PRECLUDE THE USE OF OTHER SEDIMENT BARRIERS DESIGNED TO CONTROL SHEET FLOW RUNOFF. SILT FENCE IS NOT PERMITTED TO BE USED FOR CONTROLLING CONCENTRATED SURFACE WATER FLOW (ONLY SHEET FLOW).

STORMWATER DIVERSION PRACTICES SHALL BE USED TO KEEP RUNOFF AWAY FROM DISTURBED AREAS AND STEEP SLOPES WHERE PRACTICAL. SUCH DEVICES, WHICH INCLUDE SWALES, DIKES OR BERMS, MAY RECEIVE FROM AREAS UP TO 10 ACRES.

IF SMALL RILLS OR GULLIES DEVELOP, TEMPORARY DIVERSIONS SHALL BE INSTALLED UNTIL SATISFACTORY SEEDING IS ESTABLISHED.

INLET PROTECTION

OTHER EROSION AND SEDIMENT CONTROL PRACTICES SHALL MINIMIZE SEDIMENT LADEN WATER ENTERING ACTIVE STORM DRAIN SYSTEMS, UNLESS THE STORM DRAIN SYSTEM DRAINS TO A SEDIMENT POND. INLET PROTECTION IS MANDATORY WHERE SEDIMENT SETTLING PONDS WILL NOT BE IMPLEMENTED.

NON-SEDIMENT POLLUTANTS CONTROLS

NO SOLID (OTHER THAN SEDIMENT) OR LIQUID WASTE, INCLUDING BUILDING MATERIALS, SHALL BE DISCHARGED IN STORMWATER RUNOFF. ALL NECESSARY BMP'S MUST BE IMPLEMENTED TO PREVENT THE DISCHARGE OF NON-SEDIMENT POLLUTANTS TO THE DRAINAGE SYSTEM OF THE SITE OR SURFACE WATERS OF THE STATE. UNDER NO CIRCUMSTANCE SHALL CONCRETE TRUCKS WASH OUT DIRECTLY INTO A DRAINAGE CHANNEL, STORM SEWER OR SURFACE WATERS OF THE STATE. NO EXPOSURE OF STORMWATER TO WASTE MATERIALS IS RECOMMENDED.

OFF-SITE TRAFFIC

OFF-SITE VEHICLE TRACKING OF SEDIMENTS AND DUST GENERATION SHALL BE MINIMIZED.

ADJACENT ROADS SHALL BE KEPT FREE OF DIRT AND DEBRIS AT ALL TIMES. TRACKING OR SPILLAGE OF MUD, DIRT, OR DEBRIS UPON STREETS IS PROHIBITED. THE CONTRACTOR SHALL BE RESPONSIBLE FOR ANY SUCH OCCURRENCE, BE IT ON STREETS OR ADJACENT PROPERTY(S), AND SHALL CLEAN UP DEBRIS IMMEDIATELY AND AS DIRECTED BY THE OWNER OR MUNICIPAL ENGINEER AT THE END OF EACH WORK DAY. IF THE CONTRACTOR FAILS TO KEEP THE WORK AREA CLEAN OF DEBRIS, OR FAILS TO CLEAN THE STREETS OF MUD AND DIRT FROM THIS CONSTRUCTION SITE, THE OWNER OR MUNICIPAL AUTHORITY MAY TAKE ACTION AND ASSESS THE CONTRACTOR FOR ANY COSTS THAT ARE INCURRED.

TRENCH AND GROUND WATER CONTROL

THERE SHALL BE NO TURBID DISCHARGES TO SURFACE WATERS OF THE STATE RESULTING FROM DEWATERING ACTIVITIES. IF TRENCH OR GROUND WATERS CONTAIN SEDIMENT, IT MUST PASS THROUGH A SEDIMENT SETTLING POND OR OTHER EQUALLY EFFECTIVE SEDIMENT CONTROL DEVICE, PRIOR TO BEING DISCHARGED FROM THE CONSTRUCTION SITE. ALTERNATIVELY, SEDIMENT MAY BE REMOVED BY SETTLING IN PLACE OR DEWATERING INTO INTO A SUMP PIT, FILTER BAG OR COMPARABLE PRACTICE. GROUND WATER DEWATERING WHICH DOES NOT CONTAIN SEDIMENT OR OTHER POLLUTANTS ARE NOT REQUIRED TO BE TREATED PRIOR TO DISCHARGE, HOWEVER, CARE MUST BE TAKEN WHEN DISCHARGING GROUND WATER TO ENSURE THAT IT DOES NOT BECOME POLLUTANT-LADEN BY TRAVERSING OVER DISTURBED SOILS OR OTHER POLLUTANT SOURCES.

SEQUENCE OF MAJOR CONSTRUCTION OPERATIONS

1. AT THE START OF CONSTRUCTION ACTIVITIES, CONTRACTOR TO INSTALL TEMPORARY CONSTRUCTION ENTRANCE.
2. CONTRACTOR TO INSTALL TREE PROTECTION FENCE.
3. CONTRACTOR TO INSTALL SILT FENCE AROUND PERIMETER OF PROPOSED DISTURBED AREAS AND MAINTAIN UNTIL FINAL STABILIZATION OF UPLAND AREAS.
4. CONTRACTOR TO CLEAR AND GRUB PROPOSED SITE.
5. CONTRACTOR TO ROUGH GRADE SITE.
6. CONTRACTOR TO INSTALL TEMPORARY STABILIZATION PER TABLE 2 ON THIS SHEET.
7. CONTRACTOR TO INSTALL TEMPORARY SHALLOW LINED EXCAVATION FOR CONCRETE TRUCK WASHOUT AND MAINTAIN UNTIL NO LONGER REQUIRED.
8. CONTRACTOR TO BEGIN CONSTRUCTION.
9. CONTRACTOR TO INSTALL UTILITIES.
10. CONTRACTOR TO INSTALL INLET PROTECTION AT ALL INLETS AND MAINTAIN THEM UNTIL UPLAND AREAS ARE STABILIZED.
11. CONTRACTOR TO FINAL GRADE SITE.
12. CONTRACTOR TO BEGIN PAVING OPERATIONS.
13. CONTRACTOR TO INSTALL PERMANENT SEEDING IN ALL NONPAVED AREAS.
14. CONTRACTOR TO REMOVE EROSION CONTROL DEVICES AFTER UPLAND AREAS HAVE BEEN STABILIZED.
15. CONTRACTOR TO INSPECT STORM SEWER AND REMOVE ALL DEBRIS FROM THE SYSTEM CAUSED BY CONSTRUCTION.

POST CONSTRUCTION MAINTENANCE PROCEDURE AT OWNER'S EXPENSE

1. THE OWNER SHALL ANNUALLY INSPECT INLETS AND OUTLET DEVICES TO ENSURE DEVICES ARE FREE OF DEBRIS AND OPERATIONAL. CLEAN AND REPAIR AS NEEDED.
2. INSPECTION REPORTS SHALL BE SUBMITTED TO THE LOCAL GOVERNING AUTHORITY.

POST CONSTRUCTION STORMWATER MANAGEMENT REQUIREMENTS

SO THAT THE RECEIVING STREAMS PHYSICAL AND BIOLOGICAL CHARACTERISTICS ARE PROTECTED AND STREAM FUNCTIONS ARE MAINTAINED, POST-CONSTRUCTION STORM WATER PRACTICES SHALL PROVIDE PERPETUAL MANAGEMENT OF RUNOFF QUALITY AND QUANTITY. THE SITE DISTURBANCE IS TO BE LIMITED TO AS LITTLE AS POSSIBLE PER OWNER REQUEST. BECAUSE OF THE LIMITED SITE DISTURBANCE, NO STRUCTURAL BMP'S ARE REQUIRED.

THE NON-STRUCTURAL BMP'S WILL BE NO MOW GRASS FILTER AREAS. THE PROPOSED CONDITIONS HAVE GRASS AREAS TO HELP WITH FILTERING STORM WATER BEFORE ENTERING THE STORM SEWER SYSTEM. THESE GRASS AREAS WILL BE MOWED NO MORE THAN TWICE PER YEAR.

CERTIFICATION

I CERTIFY UNDER PENALTY OF LAW THAT THIS DOCUMENT AND ALL ATTACHMENTS WERE PREPARED UNDER MY DIRECTION OR SUPERVISION IN ACCORDANCE WITH A SYSTEM DESIGNED TO ASSURE THAT QUALIFIED PERSONNEL PROPERLY GATHERED AND EVALUATED THE INFORMATION SUBMITTED. BASED ON MY INQUIRY OF THE PERSON OR PERSONS WHO MANAGE THE SYSTEM, OR THOSE PERSONS DIRECTLY RESPONSIBLE FOR GATHERING THE INFORMATION, THE INFORMATION SUBMITTED IS, TO THE BEST OF MY KNOWLEDGE AND BELIEF, TRUE, ACCURATE, AND COMPLETE. I AM AWARE THAT THERE ARE SIGNIFICANT PENALTIES OR SUBMITTING FALSE INFORMATION, INCLUDING THE POSSIBILITY OF FINE AND IMPRISONMENT FOR KNOWING VIOLATIONS.

NAME: WARREN PRICE   TITLE: DIRECTOR OF PUBLIC SERVICES

SIGNATURE: ____________________   DATE: ____________________

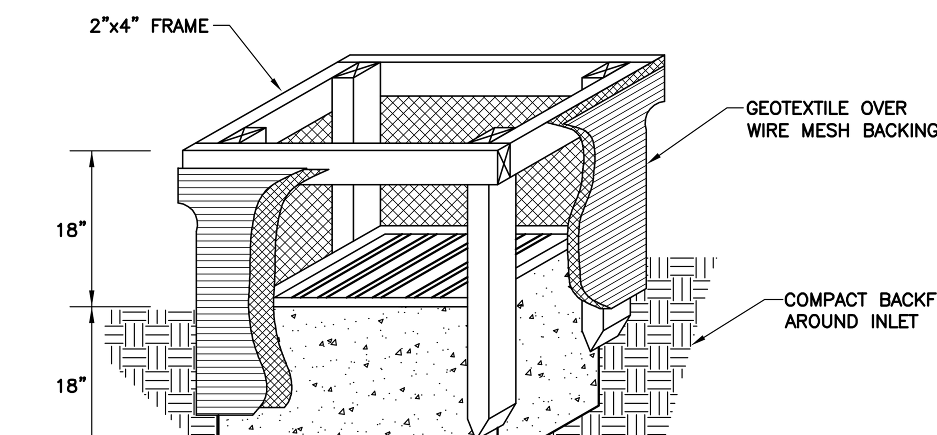

1. INLET PROTECTION SHALL BE CONSTRUCTED EITHER BEFORE UPSLOPE LAND DISTURBANCE OR BEFORE THE STORM DRAIN BECOMES OPERATIONAL.
2. THE EARTH AROUND THE INLET SHALL BE EXCAVATED COMPLETELY TO A DEPTH OF AT LEAST 18".
3. THE WOODEN FRAME & POSTS SHALL BE CONSTRUCTED OF 2 BY 4 IN. CONSTRUCTION GRADE LUMBER. POSTS SHALL BE DRIVEN 2 FT. INTO THE GROUND AT EACH CORNER OF THE INLET. SECURE FRAME TO POSTS USING THE OVERLAP JOINT METHOD AS SHOWN. THE TOP OF THE FRAME SHALL BE AT LEAST 6 IN. BELOW ADJACENT ROADS IF PONDED WATER WOULD POSE A SAFETY HAZARD TO TRAFFIC.
4. WIRE MESH SHALL BE OF SUFFICIENT STRENGTH TO SUPPORT FABRIC WITH WATER FULLY IMPOUNDED AGAINST IT. IT SHALL BE STRETCHED TIGHTLY AROUND THE FRAME AND FASTENED SECURELY TO THE FRAME.
5. GEOTEXTILE SHALL HAVE AN EQUIVALENT OPENING SIZE OF 20-40 SIEVE AND BE RESILIENT TO SUNLIGHT. IT SHALL BE STRETCHED TIGHTLY AROUND THE FRAME AND FASTENED SECURELY. IT SHALL EXTEND FROM THE TOP OF THE FRAME TO 18 IN. BELOW THE INLET NOTCH ELEVATION. THE GEOTEXTILE SHALL OVERLAP ACROSS ONE SIDE OF THE INLET SO THE ENDS OF THE CLOTH ARE NOT FASTENED TO THE SAME POST.
6. BACKFILL SHALL BE PLACED AROUND THE INLET IN COMPACTED 6 IN. LAYERS UNTIL THE EARTH IS EVEN WITH NOTCH ELEVATION ON ENDS AND TOP ELEVATION ON SIDES.
7. A COMPACTED EARTH DIKE OR A CHECK DAM SHALL BE CONSTRUCTED IN THE DITCH LINE BELOW THE INLET IF THE INLET IS NOT IN A DEPRESSION AND IF RUNOFF BYPASSING THE INLET WILL NOT FLOW TO A SETTLING POND. THE TOP OF THE EARTH DIKES SHALL BE AT LEAST 6 IN. HIGHER THAN THE TOP OF THE FRAME.

INLET PROTECTION (IP)

TEMPORARY SEEDING NEEDS TO BE ESTABLISHED WITHIN SEVEN (7) DAYS ON ALL BARE AREAS THAT ARE NOT GOING TO BE DISTURBED FOR 21 OR MORE DAYS. ALSO, TEMPORARY SEEDING NEEDS TO BE ESTABLISHED WITHIN 2 DAYS ON AREAS WITHIN FIFTY FEET OF A STREAM.

TEMPORARY SEEDING SPECIES SELECTION

SEEDING DATES	SPECIES	LB./1,000FT.	PER AC.
MARCH 1– AUGUST 15	OATS	3	4 BUSHEL
	TALL FESCUE	1	40LBS.
	ANNUAL RYEGRASS	1	40LBS.
	PERENNIAL RYEGRASS	1	40LBS.
	TALL FESCUE	1	40LBS.
	ANNUAL RYEGRASS	1	40LBS.
AUGUST 16 – NOVEMBER 1	RYE	3	2 BUSHEL
	TALL FESCUE	1	40LBS.
	ANNUAL RYEGRASS	1	40LBS.
	WHEAT	3	2 BUSHEL
	TALL FESCUE	1	40LBS.
	ANNUAL RYEGRASS	1	40LBS.
	PERENNIAL RYEGRASS	1	40LBS.
	TALL FESCUE	1	40LBS.
	ANNUAL RYEGRASS	1	40LBS.
NOVEMBER 1 – SPRING SEEDING	USE MULCH ONLY, SODDING PRACTICES OR DORMANT SEEDING.		
NOTE: OTHER APPROVED SEED SPECIES MAY BE SUBSTITUTED			

SEEDING:

APPLY AS EARLY IN THE DAY AS POSSIBLE, BUT NO LATER THAN AT THE END OF THE DAY TO BENEFIT FROM MOISTURE STILL IN THE SURFACE LAYER.

APPLY UNIFORMLY OVER THE AREA TO BE PROTECTED WITH A CYCLONE SEEDER, DRILL. HYDROSEEDER OR CULTIPACKER SEEDER.

IMMEDIATELY PROTECT WITH STRAW MULCH.

APPLY ON AREAS THAT ARE NOT TO BE GRADED OR REWORKED FOR 21 OR MORE DAYS.

LIME AND FERTILIZE BASED ON SOIL TESTS FOR NUTRIENT REQUIREMENTS FOR ADEQUATE GROWTH.

MULCHING:

APPLY STRAW AT THE RATE OF 90LBS. PER 1,000 SQUARE FEET (2-3 BALES) OR 2 TONS PER ACRE OR OTHER MULCHES ACCORDING TO MANUFACTURERS SPECIFICATIONS.

LIME & FERTILIZER:

TAKE A SOIL TEST TO DETERMINE ACTUAL AMOUNTS OF NITROGEN, PHOSPHOROUS AND POTASH NEEDED.

OR APPLY 15 POUNDS OF 10-10-10 PER 1,000 SQUARE FEET.

ADD LIME AT THE RATE OF 100 POUNDS PER 1,000 SQUARE FEET.

TIMELINESS:

IMMEDIATELY AFTER THE WORK IS COMPLETED. NO LATER THAN AT THE END OF THE DAY.

TEMPORARY SEEDING (TS)

SWPP NOTES & DETAILS

N.T.S.

2 WORKING DAYS BEFORE YOU DIG
CALL TOLL FREE: 800-362-2764
OHIO UTILITIES PROTECTION SERVICE

THORSON BAKER & Associates, Inc.
Consulting Engineers
3030 West Streetsboro Road, Richfield, Ohio 44286
(330) 659-6688 Ph.
(330) 659-6675 Fax

BRAUN & STEIDL architects
Akron Columbus
1041 West Market Street · Akron, OH 44313 · 330.864.7755 fax 330.864.3691

THE CITY OF CANTON
WILLIAM J. HEALY II, MAYOR

EDWARD 'PEEL' COLEMAN CENTER - SPRAY PARK
1400 Sherrick Road S.E. - Canton, Ohio 44707

12-13-13

ISSUED FOR BID

Sheet Issue Date:	12-13-13
Designed:	TBA
Drafted:	TBA
Checked:	MNS

Revisions:
No. Date Description

© Copyright 2012 Braun & Steidl Architects

SWPP NOTES & DETAILS

C-6

11044

1/12/2012 2:55:20 PM

SILT FENCE

CONSTRUCTION SPECIFICATIONS

1. SILT FENCE SHALL BE CONSTRUCTED BEFORE UPSLOPE DISTURBANCE BEGINS OR WITHIN 7 DAYS OF FIRST GRUBBING.
2. THE HEIGHT OF THE SILT FENCE SHALL NOT EXCEED 36–INCHES, OR BE LESS THAN 16–INCHES. STORAGE HEIGHT SHALL NEVER EXCEED 18–INCHES, OR HALF OF THE TOTAL HEIGHT ABOVE THE ORIGINAL GROUND.
3. THE FENCE LINE SHALL FOLLOW LEVEL CONTOURS AS CLOSELY AS POSSIBLE.
4. IF POSSIBLE, THE FILTER FABRIC SHALL BE CUT FROM A CONTINUOUS ROLL TO AVOID THE USE OF JOINTS. WHEN JOINTS ARE NECESSARY, FILTER CLOTH SHALL BE SECURELY WRAPPED AROUND A POST.
5. POST SPACING SHALL NOT EXCEED 6 FEET. WHERE POSSIBLE, VEGETATION SHALL BE PRESERVED FOR ± 5 FEET UPSLOPE FROM THE SILT FENCE. IF VEGETATION IS REMOVED, IT SHALL BE RESTORED WITHIN 7 DAYS FROM INSTALLATION OF THE SILT FENCE.
6. SEAMS BETWEEN SECTIONS OF SILT FENCE SHALL BE OVERLAPPING WITH THE STAKES OF EACH SECTION WRAPPED TOGETHER BEFORE DRIVING INTO THE GROUND.
7. TURN THE ENDS OF THE FENCE UPHILL APPROXIMATELY 2 FEET. A TRENCH SHALL BE EXCAVATED APPROXIMATELY 4–INCHES WIDE AND 6–INCHES DEEP ALONG THE LINE OF THE POSTS AND UPSLOPE FROM THE BARRIER.
8. FILTER FABRIC SHALL NOT BE STAPLED TO EXISTING TREES.
9. THE TRENCH SHALL BACKFILLED AND THE SOIL COMPACTED OVER THE TOE OF THE FILTER FABRIC.
10. SILT FENCES PLACED AT THE TOE OF A SLOPE SHALL BE SET AT LEAST 10 FEET FROM THE TOE IN ORDER TO INCREASE PONDING VOLUME. SILT FENCES ARE TO BE USED ONLY IN SITUATIONS IN WHICH SHEET FLOW IS EXPECTED, BUT NOT IN DRAINAGE DITCHES, CHANNELS, OR RAVINES IN WHICH CHANNELIZED FLOW OCCURS. SILT FENCES SHALL BE REMOVED WHEN THEY HAVE EXCEEDED THEIR USEFUL PURPOSE, BUT NOT BEFORE THE UPSLOPE AREA HAS BEEN PERMANENTLY STABILIZED AND SEDIMENT STORED BEHIND THE SILT FENCE HAS BEEN REMOVED.

MAINTENANCE AND INSPECTION

1. SILT FENCE SHALL BE INSPECTED DAILY, WEEKLY AND AFTER EACH SIGNIFICANT STORM (1/2–INCH IN 24 HOURS). ANY REQUIRED REPAIRS SHALL BE MADE IMMEDIATELY. SEDIMENT MAY BE REMOVED AFTER EACH STORM, BUT MUST BE REMOVED WHEN IT REACHES 1/3± HEIGHT OF THE FENCE (9–INCHES MAXIMUM). THE FABRIC SHALL BE REPLACED WHEN IT IS TORN, HAS HOLES, DECOMPOSES OR IS NO LONGER DETAINING WATER FOR SEDIMENTATION AND THE BARRIER IS STILL REQUIRED. THE POSTS SHALL BE REPLACED IF THEY ARE BENT OR BROKEN. FENCES THAT ARE KNOCKED DOWN OR HAVE JOINTS THAT ARE SEPARATED OR ARE BEING UNDERCUT BY FLOWS SHALL BE REPLACED IMMEDIATELY.
2. SEDIMENT REMOVED SHALL BE DISPOSED OF IN AN AREA PREVIOUSLY APPROVED BY THE LOCAL AUTHORITIES AND OWNER. AT NO TIME SHALL SEDIMENT BE PLACED IN AN AREA THAT WILL CONTRIBUTE SEDIMENT OFF–SITE AND IS NOT PERMANENTLY STABLE.

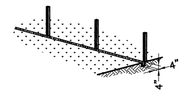

1. SET POSTS AND EXCAVATE A 4" TRENCH UPSLOPE ALONG THE LINE OF POSTS.

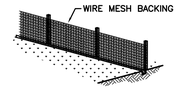

2. ATTACH THE FILTER FABRIC TO THE POSTS AND EXTEND IT IN THE TRENCH

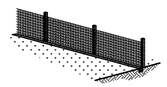

3. BACKFILL AND COMPACT THE EXCAVATED SOIL.

SILT FENCE (SF)

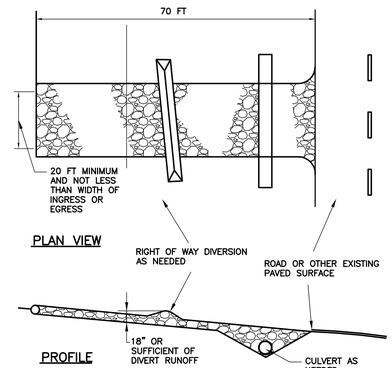

CONSTRUCTION ENTRANCE NOTES:

1. STONE SIZE – ODOT #2 (1.5–2.5 INCH) STONE SHALL BE USED, OR RECYCLED CONCRETE EQUIVALENT
2. LENGTH – THE CONSTRUCTION ENTRANCE SHALL BE AS LONG AS REQUIRED TO STABILIZE HIGH TRAFFIC AREAS BUT NOT LESS THAN 70 FT. (EXCEPTION: APPLY 30 FT. MINIMUM TO SINGLE RESIDENCE LOTS).
3. THICKNESS – THE STONE LAYER SHALL BE AT LEAST 6 INCHES THICK FOR LIGHT DUTY ENTRANCES OR AT LEAST 10 INCHES FOR HEAVY DUTY USE.
4. WIDTH – THE ENTRANCE SHALL BE AT LEAST 14 FEET WIDE, BUT NOT LESS THAN THE FULL WIDTH AT POINTS WHERE INGRESS OR EGRESS OCCURS.
5. GEOTEXTILE – A GEOTEXTILE SHALL BE PLACED OVER THE ENTIRE AREA PRIOR TO PLACING STONE. IT SHALL BE COMPOSED OF STRONG ROT–PROOF POLYMERIC FIBERS AND MEET THE FOLLOWING SPECIFICATIONS:

MINIMUM TENSILE STRENGTH	200 LBS
MINIMUM PUNCTURE STRENGTH	80 PSI
MINIMUM TEAR STRENGTH	50 LBS
MINIMUM BURST STRENGTH	320 PSI
MINIMUM ELONGATION	20%
EQUIVALENT OPENING SIZE	EOS<0.6MM
PERMITTIVITY	1X10–3 CM/SEC

6. TIMING – THE CONSTRUCTION ENTRANCE SHALL BE INSTALLED AS SOON AS IS PRACTICABLE BEFORE MAJOR GRADING ACTIVITIES.
7. CULVERT – A PIPE OR CULVERT SHALL BE CONSTRUCTED UNDER THE ENTRANCE IF NEEDED TO PREVENT SURFACE WATER FROM FLOWING ACROSS THE ENTRANCEOT TO PREVENT RUNOFF FROM BEING DIRECTED OUT ONTO PAVED SURFACES.
8. WATER BAR – A WATER BAR SHALL BE CONSTRUCTED AS PART OF THE CONSTRUTION ENTRANCE IF NEEDED TO PREVENT SURFACE RUNOF FROM FLOWING THE LENGTH OF THE CONSTRUCTION ENTRANCE AND OUT ONTO PAVED SURFACES.
9. MAINTENANCE – TOP DRESSING OF ADDITIONAL STONE SHALL BE APPLIED AS CONDITIONS DEMAND. MUD SPILLED, DROPPED, WASHED OR TRACKED ONTO PUBLIC ROADS, OR ANY SURFACE WHERE RUNOFF IS NOT CHECKED BY SEDIMENT CONTROLS, SHALL BE REMOVED IMMEDIATELY. REMOVAL SHALL BE ACCOMPLISHED BY SCRAPING OR SWEEPING.
10. CONSTRUCTION ENTRANCES SHALL NOT BE RELIED UPON TO REMOVE MUD FROM VEHICLES AND PREVENT OFF–SITE TRACKING. VEHICLES THAT ENTER AND LEAVE THE CONSTRUCTION SITE SHALL BE RESTRICTED FROM MUDDY AREAS.
11. REMOVAL – THE ENTRANCE SHALL REMAIN IN PLACE UNTIL THE DISTURBED AREA IS STABILIZED OR REPLACED WITH A PERMANENT ROADWAY OR ENTRANCE.

TEMPORARY CONSTRUCTION ENTRANCE (CE)

THE PATENTED DANDY BAG® IS DESIGNED FOR USE WITH FLAT GRATES (INCLUDING ROUND) AND MOUNTABLE CURBS TO DETAIN SEDIMENT–LADEN STORM WATER. THE SUSPENDED SOLIDS ARE ALLOWED TO SETTLE OUT OF THE SLOWED FLOW PRIOR TO ENTERING THE DANDY BAG®.

INSTALLATION

1. STAND THE GRATE ON END
2. PLACE THE DANDY BAG® OVER THE GRATE
3. ROLL THE GRATE OVER SO THAT THE OPEN END IS UP
4. PULL UP THE SLACK
5. TUCK THE FLAP IN
6. PRESS THE VELCRO STRIPS TOGETHER
7. BE SURE THAT THE END OF THE GRATE IS COMPLETELY COVERED BY THE FLAP OR THE DANDY BAG® WILL NOT WORK PROPERLY
8. HOLDING THE HANDLES, CAREFULLY PLACE THE DANDY BAG® WITH THE GRATE INSERTED INTO THE CATCH BASIN FRAME

MAINTENANCE

TO INSURE PROPER OPERATION REMOVE SILT, SEDIMENT, AND DEBRIS FROM THE SURFACE AND THE VICINITY OF THE UNIT WITH A SQUARE POINT SHOVEL OR STIFF BRISTLE BROOM AWAY FROM ENVIRONMENTALLY SENSITIVE AREAS AND WATERWAYS IN MANNER SATISFACTORY TO THE ENGINEER/INSPECTOR. REMOVE FINE MATERIAL FROM INSIDE DANDY BAG® AS NEEDED. DISPOSE OF DANDY BAG® NO LONGER IN USE AT AN APPROPRIATE RECYCLING OR SOLID WASTE FACILITY.

INLET INSPECTION

TO INSPECT INLET, REMOVE DANDY BAG® WITH GRATE INSIDE, INSPECT CATCH BASIN AND REPLACE DANDY BAG BACK INTO GRATE FRAME.

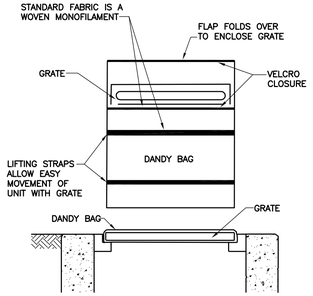

INLET PROTECTION IN EXISTING PAVEMENT (IP)

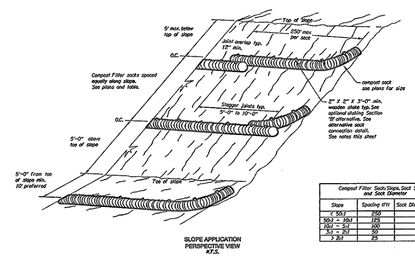

Compost Filter Sock Slope, Sock Spacing, and Sock Diameter		
Slope	Spacing (ft)	Sock Diameter (inches)
< 50:1	100	8
50:1 – 10:1	125	12
10:1 – 5:1	100	12
5:1 – 3:1	50	18
> 3:1	25	18

Installation:

Trenching is not required. Once the filter sock is filled and put in place, it should be anchored to the slope. The preferred anchoring method is to drive stakes through the center of the sock at regular intervals; alternatively, stakes can be placed on the downstream side of the sock. The ends of the filter sock should be directed upslope, to prevent storm water from running around the end of the sock. The filter sock may be vegetated by incorporating seed into the compost prior to placement in the filter sock. Since compost filter socks do not have to be trenched into the ground, they can be installed on frozen ground or even cement and should be anchored or weighed down to prevent movement with sand bags.

Maintenance

Compost filter socks should be inspected regularly, as well as after each rainfall event, to ensure that they are intact and the area behind the sock is not filled with sediment. If there is excessive ponding behind the filter sock or accumulated sediments reach the top of the sock, an additional sock should be added on top or in front of the existing filter sock in these areas, without disturbing the soil or accumulated sediment. If the filter sock was overtopped during a storm event, the operator should consider installing an additional filter sock on top of the original, placing an additional filter sock further up the slope, or using an additional BMP, such as a compost blanket in conjunction with the sock(s).

COMPOST FILTER SOCK SEDIMENT BARRIER DETAIL

SWPP NOTES & DETAILS

N.T.S.

2 WORKING DAYS
BEFORE YOU DIG
CALL TOLL FREE: 800–362–2764
OHIO UTILITIES PROTECTION SERVICE

THORSON BAKER & Associates, Inc.
Consulting Engineers
3030 West Streetsboro Road
Richfield, Ohio 44286
(330) 659–6688 Ph.
(330) 659–6675 Fax

BRAUN & STEIDL architects
Akron
1041 West Market Street - Akron, OH 44313 - 330.864.7755 Fax 330.864.3691
Columbus

THE CITY OF CANTON
WILLIAM J. HEALY II, MAYOR

EDWARD 'PEEL' COLEMAN CENTER - SPRAY PARK
1400 Sherrick Road S.E. - Canton, Ohio 44707

12-13-13

ISSUED FOR BID

Sheet Issue Date:	12-13-13
Designed:	TBA
Drafted:	TBA
Checked:	MNS

Revisions:

No.	Date	Description

Copyright - 2013
Braun & Steidl Architects

SWPP NOTES & DETAILS

C-7

11044

Y:\2011\2011-0794\Civil\Landscape\2011-0794-C7 (EE1).dwg, Layout1, 12/6/2013 11:13:50 AM, 1:1
1/12/2012 2:55:33 PM

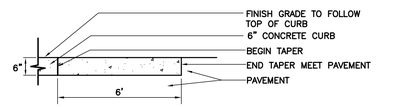

PLAN

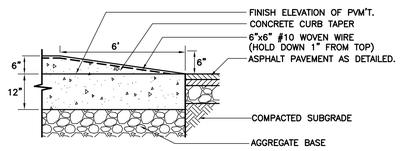

ELEVATION

CONCRETE CURB TAPER

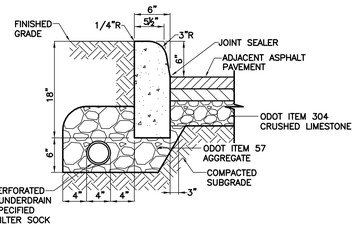

CONCRETE CURB

(ODOT TYPE 6 WITH UNDERDRAIN)

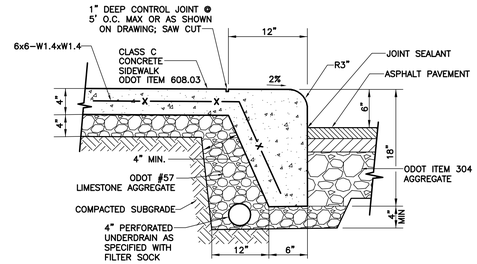

INTEGRAL CONCRETE CURB AND WALK

(WITH UNDERDRAIN)

SECTION	SURFACE	INTERMED.	BASE
STANDARD	1.5"	3"	6"
HEAVY DUTY	1.5"	5" (IN 2 LFTS)	6"

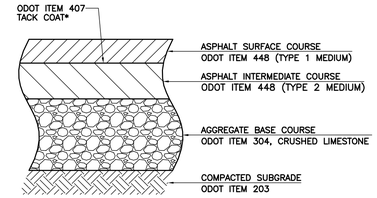

SLAG IS NOT PERMITTED IN SURFACE OR INTERMEDIATE COURSES

* TACK COAT ONLY REQUIRED WHEN SURFACE COURSE IS INSTALLED 24 HOURS OR MORE AFTER INTERMEDIATE COURSE.

** ASSUMED PAVEMENT DESIGN, GEOTECHNICAL ENGINEER TO VERIFY DESIGN

ASPHALT PAVEMENT DETAIL

SECTION	SURFACE	BASE
STANDARD	4"	4"

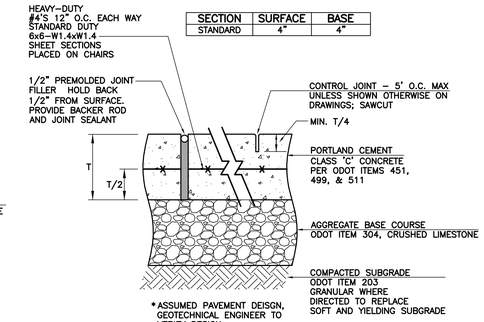

NOTES:

1. 1/2" PREMOLDED EXPANSION JOINT PER O.D.O.T. 705.03 – 20' O.C. MAX. UNLESS SHOWN OTHERWISE ON DRAWINGS AND AT ALL CURBS, WALKS, WALLS AND OTHER FIXED OBJECTS.
2. CONTROL JOINT – 5' O.C. MAX OR AS SHOWN ON DRAWINGS.
3. CROSS SLOPE AT 1/8" PER FOOT MIN. TO DRAIN.
4. USE EDGING TOOL AT PERIMETER.
5. SIDEWALK PER O.D.O.T. 608.03.
6. PROVIDE HEAVY BROOM FINISH ON ALL RAMPS PERPENDICULAR TO RAMP SLOPE.
7. SURFACE TO BE SEALED PER ODOT ITEM 512.

REINFORCED CONCRETE PAVEMENT DETAIL

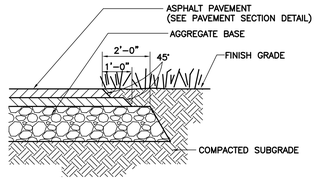

ASPHALT CONCRETE EDGE

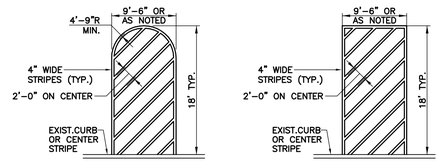

NOTES:

1. STRIPE COLOR TO BE WHITE OR MATCH OTHER PARKING SPACE STRIPING
2. IF NO CURB OR CENTER STRIPE, PAINT 4" STRIPE CONNECTING SIDE STRIPES; TERMINATE AT END OF PARKING STALL OR WHEELSTOP
3. PAINT TO BE PER ODOT ITEM 642 TYPE 1 PAINT

STRIPING DETAIL

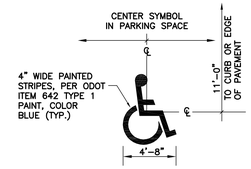

ACCESSIBLE SYMBOL DETAIL

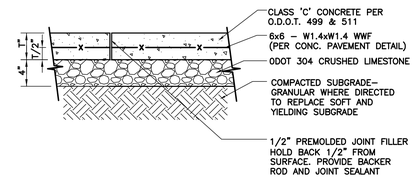

EXPANSION JOINT

ALL SIGNS SHALL COMPLY WITH OHIO DEPARTMENT OF TRANSPORTATION, "MANUAL OF UNIFORM TRAFFIC CONTROL DEVICES", LOCAL CODES AND AS SPECIFIED.

THE SIGN SHEETING MATERIAL SHALL BE TYPE "G" REFLECTIVE SHEETING. ALL DIRECTIONAL SIGNAGE SHALL HAVE A 7'–0" CLEARANCE TO THE BASE.

MOUNT SIGN IN ACCORDANCE WITH MANUFACTURER'S INSTRUCTIONS.

12x18
(FIRE DEPT. TO APPROVE)
(TWO SIGNS PER POST)

R7–8
12x18

R7–8B
12x6
(SEE NOTE 5)

R7–H8B
12x6

NOTES:

1. SEE SITE LAYOUT PLAN FOR SIGN LOCATIONS. LOCATIONS TO BE FIELD VERIFIED.
2. SIGN SHALL BE SINGLE POST DESIGN.
3. SIGN POST SHALL BE U CHANNEL TYPE PER ODOT SECTION 730.015. DRAWING TC–41.20.
4. FIELD OF SIGNS SHALL BE BLUE RETROREFLECTIVE AND LEGEND SHALL BE WHITE RETROREFLECTIVE.
5. SEE PLAN FOR LOCATION OF VAN SPACE

ACCESSIBLE PARKING SIGNS

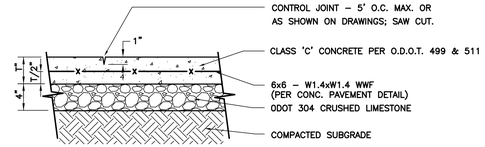

CONTROL JOINT

NOTES:

1. 1/2" PREMOLDED EXPANSION JOINT PER O.D.O.T. 705.03 – 20' O.C. MAX. OR AS SHOWN ON DRAWINGS AT ALL CURBS, WALKS, WALLS AND OTHER FIXED OBJECTS.
2. CONTROL JOINT – 5' O.C. MAX. OR AS SHOWN ON DRAWINGS.
3. CROSS SLOPE AT 1/8" PER FOOT MIN. TO DRAIN.
4. USE EDGING TOOL AT PERIMETER.
5. SIDEWALK PER O.D.O.T. 608.03.
6. SURFACE TO BE SEALED PER ODOT ITEM 512

PAVEMENT JOINTS

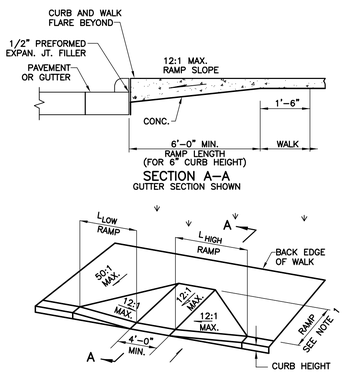

VEHICULAR WAY SLOPE	CURB RAMP LENGTHS @ 1"/FT.	
	$L_{LOW\ SIDE}$ *	$L_{HIGH\ SIDE}$ *
0.01	5'–5"	6'–10"
0.02	4'–10"	7'–11"
0.03	4'–5"	9'–5"
0.04	4'–1"	11'–8"
0.05	3'–9"	15'–2"

* – MEASURED ALONG THE BACK OF A 6" HIGH CURB

$$L_{HIGH} = \frac{\text{CURB HT. (IN FEET)}}{0.083 - \text{STREET SLOPE}}$$

$$L_{LOW} = \frac{\text{CURB HT. (IN FEET)}}{0.083 + \text{STREET SLOPE}}$$

RAMP DETAIL

NOTES:

1. THE MINIMUM LENGTH OF A RAMP IS 6' FROM THE BACK OF A 6" HIGH CURB AND MAY BE INCREASED WHERE FEASIBLE TO OBTAIN A FLATTER RAMP SLOPE OR TO BETTER BLEND WITH THE WALK CONFIGURATION.

PERPENDICULAR CURB RAMP DETAIL (NOT IN PUBLIC RIGHT–OF–WAY) RAMP TYPE 'D'

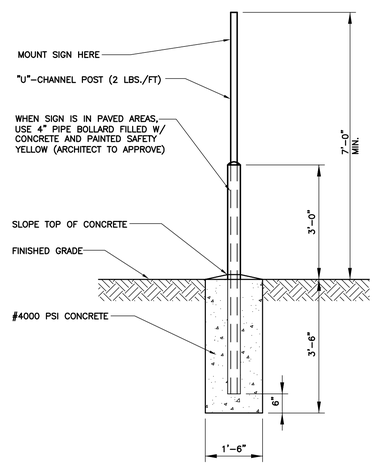

STANDARD SIGN BASE

SITE DETAILS

N.T.S.

2 WORKING DAYS
BEFORE YOU DIG
CALL TOLL FREE: 800–362–2764
OHIO UTILITIES PROTECTION SERVICE

THORSON BAKER & Associates, Inc.
Consulting Engineers
3030 West Streetsboro Road
Richfield, Ohio 44286
(330) 659–6688 Ph.
(330) 659–6675 Fax

BRAUN & STEIDL architects
Akron
1041 West Market Street - Akron, OH 44313 - 330.864.7755 fax 330.864.3691
Columbus

EDWARD 'PEEL' COLEMAN CENTER - SPRAY PARK
1400 Sherrick Road S.E. - Canton, Ohio 44707

12-13-13

ISSUED FOR BID

Sheet Issue Date:	12-13-13
Designed:	TBA
Drafted:	TBA
Checked:	MNS

Revisions:

No.	Date	Description

Copyright 2012
Braun & Steidl Architects

SITE DETAILS

C-8

11044

Y:\2011\2011-0784\Civil\Landscape\2011-0784-C8.DWG, Layout1, 12/20/2013 11:13:40 AM, 1:1
12/20/2012 2:55:29 PM

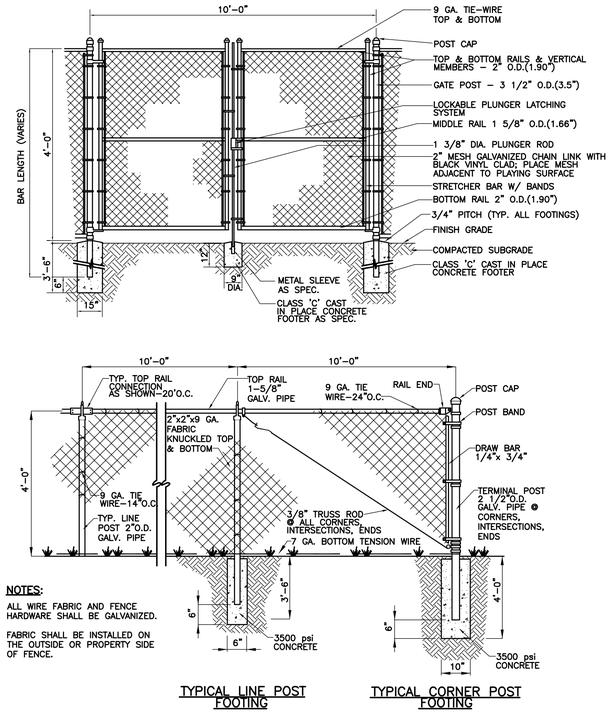

NOTES:

ALL WIRE FABRIC AND FENCE HARDWARE SHALL BE GALVANIZED.

FABRIC SHALL BE INSTALLED ON THE OUTSIDE OR PROPERTY SIDE OF FENCE.

4' HIGH BLACK VINYL CHAIN LINK FENCE & DOUBLE GATE DETAIL

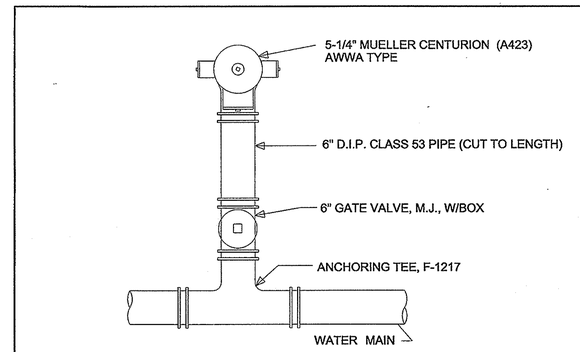

HYDRANT SETTINGS CONSIST OF HYDRANT, VALVE, VALVE BOX, FITTINGS AND MATERIALS SHOWN OR SPECIFIED WHICH ARE NEEDED FOR PROPER INSTALLATION.

SEE SPECIFICATIONS FOR: MORE INFORMATION ABOUT MATERIALS, SETTING HYDRANTS AND DRAINAGE REQUIREMENTS.

IF RESTRAINED JOINT FITTINGS CANNOT BE USED, (2) TIE RODS AND 94) EYE BOLTS W/NUTS AND WASHERS MUST BE USED.

FIGURES SUCH AS F-1217 INDICATE CLOW CORPORATION STYLES. USE THIS BRAND OR APPROVED EQUAL.

ALL HYDRANTS ARE TO BE INSTALLED WITH THE PUMPER NOZZLE FACING THE STREET.

CANTON WATER DEPARTMENT - CITY OF CANTON, OHIO		
HYDRANT CONNECTION	APRIL 5, 1989	DWG.NO.C70

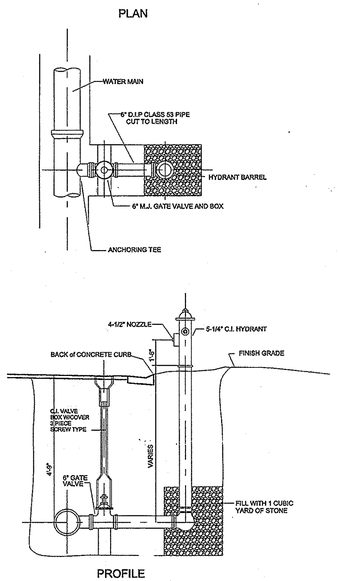

CANTON WATER DEPARTMENT - CITY OF CANTON, OHIO		
TYPICAL HYDRANT SETTING	APRIL 6, 1989	DWG.NO.C71

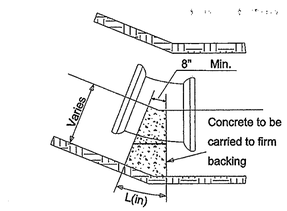

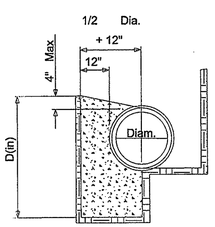

Size of Pipe	Degree of Bend 45`		Degree of Bend 90`	
	L	D	L	D
6"	19	14	28	18
8"	29	16	40	24
12"	44	24	56	40
16"	60	36	76	56

CANTON WATER DEPARTMENT - CITY OF CANTON, OHIO		
HORIZONTAL THRUST BLOCKS	FEBRUARY 7, 2000	DWG.NO.C130

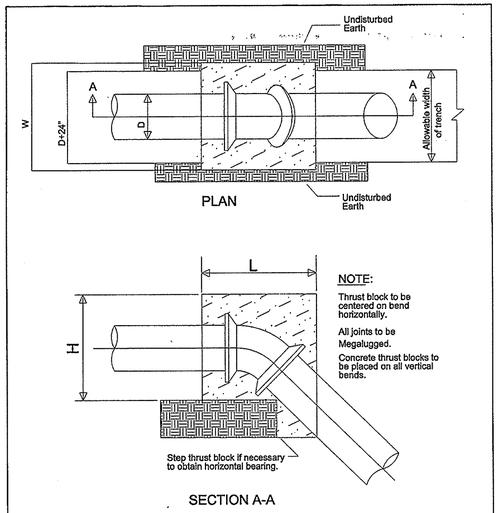

SIZE OF PIPE	DEGREE OF BEND 11 1/4				22 1/2				45			
	L	W	H	V cu. yds	L	W	H	V cu. yds	L	W	H	V cu. yds
6"	12	48	18	0.2	15	43	36	0.5	28	55	24	0.8
8"	12	63	24	0.4	18	57	34	0.7	36	57	33	1.4
12"	20	54	36	0.8	37	62	37	1.7	48	62	51	3.1
16"	31	65	38	1.6	60	65	39	3.0	65	65	65	5.6

CANTON WATER DEPARTMENT - CITY OF CANTON, OHIO		
THRUST BLOCKS FOR VERTICAL BENDS	FEBRUARY 14, 1992	DWG.NO.C147

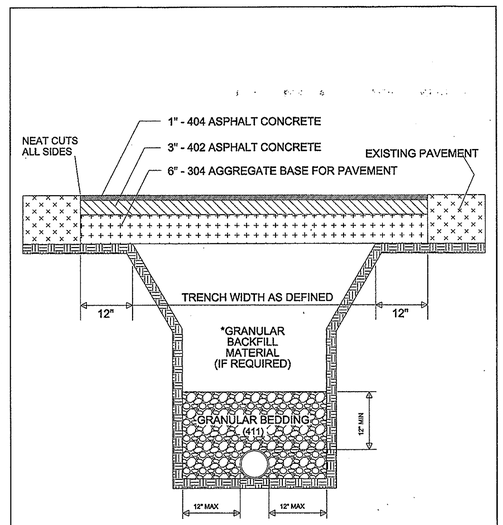

*CHECK WITH LOCAL AUTHORITY HAVING JURISDICTION WITHIN THE RIGHT-OF-WAY REGARDING BACKFILL REQUIREMENTS

CANTON WATER DEPARTMENT - CITY OF CANTON, OHIO		
TRENCH & ROADWAY DETAIL - D.I.P.	OCTOBER 1, 1993	DWG.NO.C175

SITE DETAILS
N.T.S.

2 WORKING DAYS
BEFORE YOU DIG
CALL TOLL FREE: 800-362-2764
OHIO UTILITIES PROTECTION SERVICE

THORSON BAKER & Associates, Inc.
Consulting Engineers
3030 West Streetsboro Road
Richfield, Ohio 44286
(330) 659-6688 Ph.
(330) 659-6675 Fax

BRAUN & STEIDL architects
Akron Columbus
1041 West Market Street - Akron, OH 44313 - 330.864.7755 fax 330.864.3691

EDWARD 'PEEL' COLEMAN CENTER - SPRAY PARK
1400 Sherrick Road S.E. - Canton, Ohio 44707

12-13-13

ISSUED FOR BID

Sheet Issue Date:	12-13-13
Designed:	TBA
Drafted:	TBA
Checked:	MNS

Revisions:
No. Date Description

Copyright - 2012
Braun & Steidl Architects

SITE DETAILS

C-9

11044

Y:\2011\2011-0784\CadCivil Landscape\2011-0784-C9 (SITE).dwg Layout1 12/5/2013 11:45:44 AM, 1:1
12/3/2012 2:55:30 PM

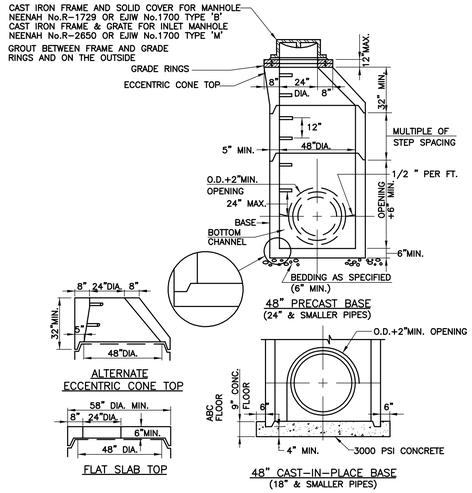

STANDARD PRECAST CONCRETE MANHOLE

24" PIPE OR SMALLER

NOTES:

SECTIONS OF THE PRECAST MANHOLE SHALL BE CAST AND ASSEMBLED WITH EITHER ALL TONGUE OR ALL GROOVE ENDS UP. LIFT HOLES MAY BE PROVIDED IN EACH SECTION FOR HANDLING.

TOP AND TRANSITION OR REDUCER SECTIONS MAY BE EITHER ECCENTRIC CONE, CONCENTRIC CONE OR FLAT SLAB.

BASES FOR MANHOLES ARE SHOWN WITH MONOLITHIC FLOOR AND RISER WHICH MAY BE CAST IN ONE OR TWO OPERATIONS. A PERMISSIBLE ALTERNATE IS TO CAST AND SHIP THE FLOOR AND BARREL SEPARATELY. OPENINGS FOR INLET AND OUTLET PIPES SHALL BE PROVIDED, EITHER WHEN THE UNIT IS CAST OR LATER, TO MEET PROJECT REQUIREMENTS. BOTTOM CHANNELS MAY BE FORMED OF CONCRETE, PRECAST IN THE BASE OR BY FIELD CONSTRUCTION. FLOORS MAY ALSO BE POURED IN PLACE.

OPENINGS IN RISER SECTIONS FOR 18" AND SMALLER INLET PIPES SHALL BE PREFABRICATED. FLEXIBLE CONNECTIONS SHALL BE PROVIDED FOR SANITARY AND COMBINED SEWERS. PREMIUM SEALS SHALL MEET ASTM C 923.

JOINT SEALS BETWEEN PRECAST MANHOLE SECTIONS AND SEWERS SHALL BE RESILIENT AND FLEXIBLE GASKET JOINTS SHALL MEET ASTM C 443, FEDERAL SPECIFICATIONS SS-S-00210 (210 A) AND AASHTO M-198.

MANHOLE JOINTS AND GRADE RINGS SHALL BE SEALED EXTERNALLY AND BETWEEN THE GRADE RINGS WITH A LAYER OF MASTIC COMPOUND SUCH AS FABERLINE, KENT SEAL OR APPROVED EQUIVALENT.

MATERIALS FOR BASES AND OTHER PRECAST SECTIONS, INCLUDING REINFORCEMENT NOT SPECIFIED HEREON, SHALL COMPLY WITH THE SPECIFICATIONS.

PRECAST MANHOLES SHALL CONFORM TO THE REQUIREMENTS OF ASTM C 478.

SEAL ALL LIFT HOLES WITH APPROVED CONCRETE PLUGS.

LANDING PLATFORMS AS SHOWN ON THE LANDING DETAILS SHALL BE INSTALLED IN MANHOLES THAT ARE OVER 28 FEET DEEP TO THE INVERT WITH A MAXIMUM VERTICAL SPACING OF 20 FEET.

MANHOLE FRAMES - CHIMNEY SEALS WILL BE REQUIRED ON ALL NEW SANITARY MANHOLES

A MINIMUM OF 3" VERTICAL WALL IS REQUIRED BELOW THE CASTING FOR INSTALLATION OF CHIMNEY SEALS.

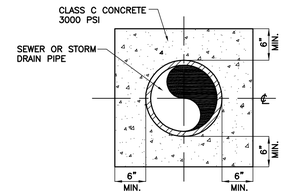

SECTION

CONCRETE PIPE ENCASEMENT

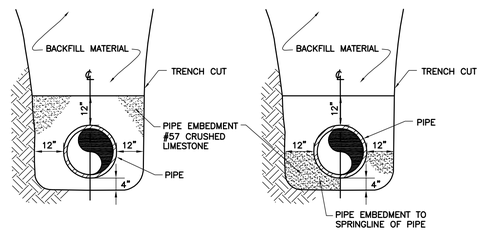

GRANULAR EMBEDMENT PVC PIPE

GRANULAR EMBEDMENT REINFORCED CONCRETE PIPE

BEDDING DETAILS

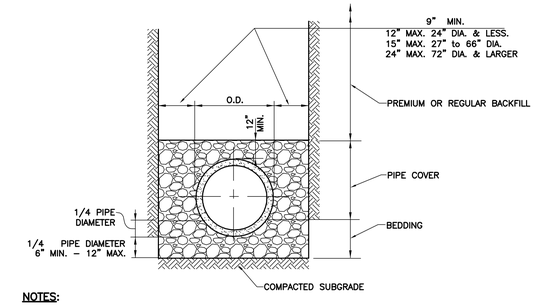

NOTES:

LATERAL CONNECTIONS TO HAVE A MINIMUM BEDDING DEPTH OF 3" COARSE AGGREGATE.

PIPE COVER SHALL CONSIST OF COARSE INTERLOCKING AGGREGATE NO. 57, 6, 67, 68, 7, 78, OR 8.

BEDDING SHALL CONSIST OF COARSE INTERLOCKING AGGREGATE NO. 57, 6, 67, 68, 7, 78, OR 8 FOR 60" OR SMALLER DIAMETER PIPE. FOR 66" OR LARGER DIAMETER PIPE NO. 4 AGGREGATE MAY ALSO BE USED.

PREMIUM BACKFILL SHALL CONSIST OF COARSE INTERLOCKING AGGREGATE NO. 57, 6, 67, 68, 7, 78, 8, ODOT ITEM 304, OR LIMESTONE SCREENINGS.

TRENCH WIDTH AND CONCRETE CRADLE WIDTH SHALL BE O.D. OF PIPE PLUS 9" ON EACH SIDE OF PIPE.

FOR CONCRETE AND DUCTILE IRON PIPE, PIPE COVER IS TO THE SPRINGLINE OR GREATER.

IN PAVED AREAS COARSE INTERLOCKING AGGREGATE TO THE TOP OF THE TRENCH ON ALL TYPES OF PIPE.

TYPICAL TRENCH DETAIL

(FLEXIBLE PIPE)

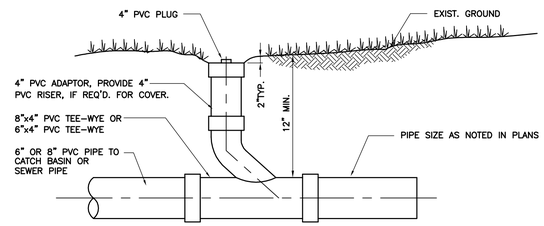

NOTES:

1. PROVIDE A CLEANOUT ON EACH DRAIN CONNECTION. THE PRICE BID FOR EACH CLEANOUT SHALL INCLUDE THE PVC TEE-WYE, 4" PVC PIPE, 4" PVC PLUG (SCREW TYPE) AND INSTALLATION.
2. LOCATION OF CLEANOUT SHALL BE AS SHOWN ON THE UTILITY PLAN.

CLEANOUT

NOTES:

1. QUALITY: MATERIALS SHALL CONFORM TO ASTM A536 GRADE 70-50-05 & A48-CLASS 30B.
2. MATERIAL: DUCTILE IRON GRATE W/CAST IRON FRAME.
3. PAINT: CASTINGS ARE FURNISHED WITH A BLACK PAINT.
4. SOLID COVER HAS H-25 HEAVY DUTY RATING.
5. LOCKING DEVICE AVAILABLE UPON REQUEST.
6. PRICE INCLUDES FRAME & GRATE/COVER.

APPROX. WEIGHT WITH FRAME = 39.90 LBS.

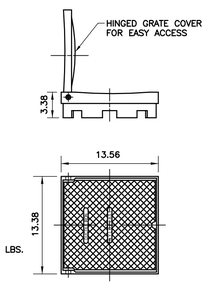

SOLID LID

MODEL 1299CGC

NOTES:

1. QUALITY: MATERIALS SHALL CONFORM TO ASTM A536 GRADE 70-50-05
2. MATERIAL: DUCTILE IRON FRAME & GRATE
3. PAINT: CASTINGS ARE FURNISHED WITH A BLACK PAINT

APPROX. DRAIN AREA = 39.75 SQ. IN.
APPROX. WEIGHT = 20.15 LBS.

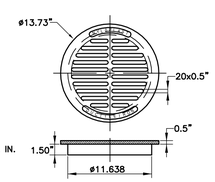

DROP-IN GRATE

MODEL 1201DI

NOTES:

1. QUALITY: MATERIALS SHALL CONFORM TO ASTM A536 GRADE 70-50-05
2. MATERIAL: DUCTILE IRON FRAME & GRATE
3. PAINT: CASTINGS ARE FURNISHED WITH A BLACK PAINT

APPROX. DRAIN AREA = 62.03 SQ. IN.
APPROX. WEIGHT = 35.00 LBS.

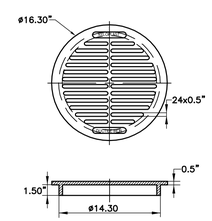

DROP-IN GRATE

MODEL 1501DI

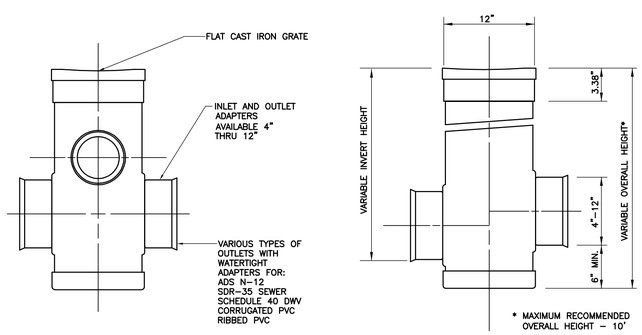

NYLOPLAST 12" YARD DRAIN

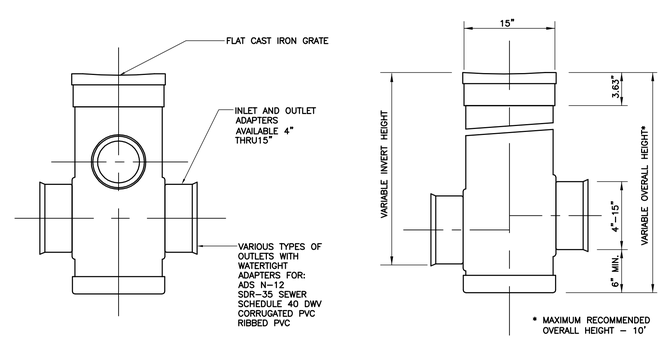

NYLOPLAST 15" YARD DRAIN

NOTE:

USE 8" CLEANOUT FOR 8" & LARGER SEWER.
FOR 6" & SMALLER SEWER, CLEANOUT SIZE SHALL MATCH SEWER DIAMETER.

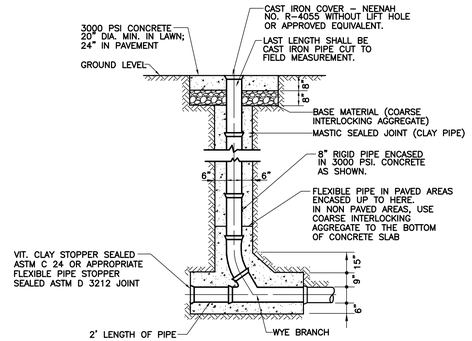

HEAVY DUTY CLEANOUT

SITE DETAILS

N.T.S.

2 WORKING DAYS
BEFORE YOU DIG
CALL TOLL FREE: 800-362-2764
OHIO UTILITIES PROTECTION SERVICE

THORSON BAKER & Associates, Inc.
Consulting Engineers
3030 West Streetsboro Road
Richfield, Ohio 44286
(330) 659-6688 Ph.
(330) 659-6675 Fax

BRAUN & STEIDL architects
Akron
1041 West Market Street - Akron, OH 44313 - 330.864.7755 fax 330.864.3691

THE CITY OF CANTON
WILLIAM J. HEALY II, MAYOR

EDWARD 'PEEL' COLEMAN CENTER - SPRAY PARK
1400 Sherrick Road S.E. - Canton, Ohio 44707

12-13-13

ISSUED FOR BID

Sheet Issue Date:	12-13-13
Designed:	TBA
Drafted:	TBA
Checked:	MNS

Revisions:

No.	Date	Description

Copyright 2012
Braun & Steidl Architects

SITE DETAILS

C-10

11044

Y:\2011\2011-0784-Ca\Civil-Landscape\2011-0784-F10 (DETL)-dwg-Layout1, 12/5/2013 11:10:52 AM, 1:1

12/2/2012 2:55:20 PM

PLANT LIST:

PLANTS

KEY	QTY.	BOTANICAL NAME	COMMON NAME	SIZE/COND.	SPACING	NOTES
AM	3	AMELANCHIER X GRANDIFLORA 'AUTUMN BRILLIANCE'	AUTUMN BRILLIANCE SERVICEBERRY	2-1/2"/B&B	AS SHOWN	–

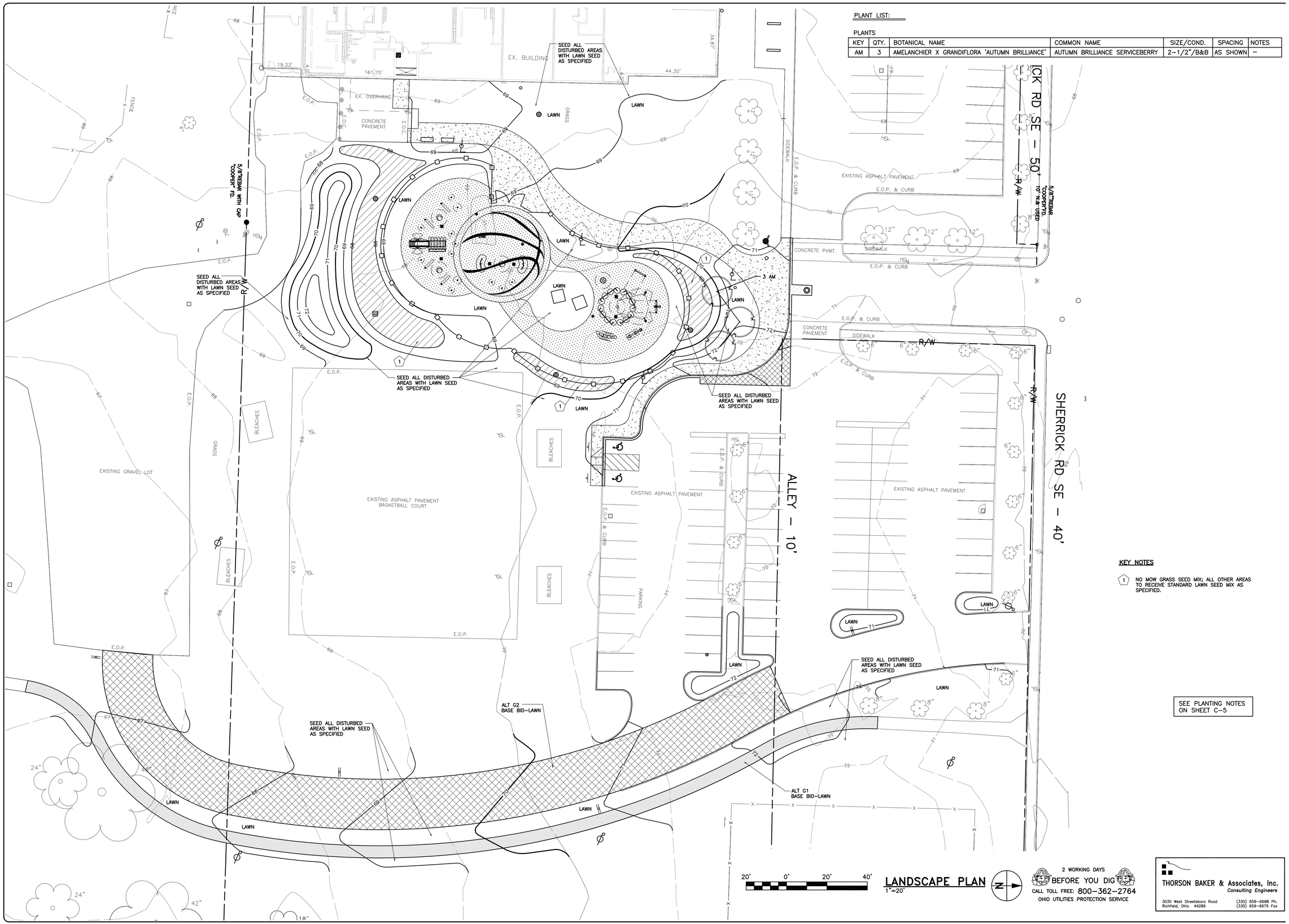

KEY NOTES

1 NO MOW GRASS SEED MIX; ALL OTHER AREAS TO RECEIVE STANDARD LAWN SEED MIX AS SPECIFIED.

SEE PLANTING NOTES ON SHEET C–5

20' 0' 20' 40'

LANDSCAPE PLAN
1"=20'

2 WORKING DAYS
BEFORE YOU DIG
CALL TOLL FREE: 800–362–2764
OHIO UTILITIES PROTECTION SERVICE

THORSON BAKER & Associates, Inc.
Consulting Engineers
3030 West Streetsboro Road
Richfield, Ohio 44286
(330) 659–6688 Ph.
(330) 659–6675 Fax

BRAUN & STEIDL architects
Akron
1041 West Market Street - Akron, OH 44313 - 330.864.7755 fax 330.864.3691
Columbus

THE CITY OF CANTON
WILLIAM J. HEALY II, MAYOR

EDWARD 'PEEL' COLEMAN CENTER - SPRAY PARK
1400 Sherrick Road S.E. - Canton, Ohio 44707

12-13-13

ISSUED FOR BID

Sheet Issue Date:	12-13-13
Designed:	TBA
Drafted:	TBA
Checked:	MNS

Revisions:
No. Date Description

Copyright - 2012
Braun & Steidl Architects

LANDSCAPE PLAN

L-1

11044

Y:\2011\2011-0784\Civil\Civil-Landscape\2011-0784-L1-SLCAPE1.dwg Layout: 12SD2013 11:14:28 AM, 1:1

12/12/2012 2:56:20 PM