TECHNICAL SPECIFICATIONS
FOR:

Water Park Facility Project at Edward 'Peel' Coleman Center

1400 Sherrick Road S.E.
CANTON, OHIO 44707

Prepared by:

BRAUN & STEIDL architects

1041 West Market Street, Akron, Ohio 44313
V:330.864.7755 F:330.864.3691 www.bsa-net.com

BSA Project No. 11044

VOLUME 1 of 1

ISSUED FOR: Permit & Bid **04-23-12**

PROJECT MANUAL
Water Park Facility Project at
EDWARD 'PEEL' COLEMAN CENTER
1400 Sherrick Road S.E. – Canton, OH 44707
JOB No. 11044

TABLE OF CONTENTS

	Page Nos.
Table of Contents	1-4
List of Drawings (00 01 15)	1-3

BID DOCUMENTS

INFORMATION PROVIDED TO BIDDERS

DIVISION 1 - GENERAL REQUIREMENTS

Section 01 11 00 – Summary of Work	1-7
Section 01 23 00 - Alternates	1-2
Section 01 26 00 - Contract Modification Procedures	1-6
Section 01 31 00 - Project Management and Coordination	1-5
Section 01 33 00 - Submittal and Substitution Procedures	1-11
Section 01 35 00 - Special Project Procedures	1-7
Section 01 35 16 - Alteration Project Procedures	1-2
Section 01 42 19 - Reference Standards	1-15
Section 01 45 00 - Quality Control	1-4
Section 01 50 00 - Temporary Facilities and Controls	1-8
Section 01 56 16 – Dust Barriers	1-7
Section 01 60 00 - Product Requirements	1-3
Section 01 71 23 - Field Engineering	1-2
Section 01 73 29 - Cutting and Patching	1-3
Section 01 74 00 – Cleaning and Waste Management	1-3
Section 01 77 00 - Closeout Procedures	1-3
Section 01 78 23 - Operating and Maintenance Data	1-8
Section 01 78 36 - Warranties	1-3
Section 01 78 39 - Project Record Documents	1-4
Section 01 78 43 - Spare Parts	1-2
Section 01 79 00 - Demonstration and Training	1-4

DIVISION 2 – EXISTING CONDITIONS

Section 02 41 19 – Selective Structure Demolition	1-7

DIVISION 3 - CONCRETE

Section 03 30 00 – Cast-In-Place Concrete	1-16

DIVISION 4 - MASONRY

Section 04 20 00 – Unit Masonry	1-16

DIVISION 5 - METALS

Section 05 12 00 - Structural Steel Framing	1-10
Section 05 50 00 – Metal Fabrications	1-9

Section 05 52 00 – Metal Railings

DIVISION 6 - WOOD PLASTIC AND COMPOSITES

Not Used

DIVISION 7 - THERMAL AND MOISTURE PROTECTION

Section 07 10 00 – Dampproofing and Waterproofing 1-4
Section 07 20 00 – Thermal Protection 1-4
Section 07 62 00 – Sheet Metal Flashing and Trim 1-8
Section 07 84 00 – Firestopping 1-6
Firestopping Drawings - Concrete Floor Assemblies and CMU Wall Assemblies 1-44
Firestopping Drawings – Concrete & CMU

Section 07 92 00 – Joint Sealants 1-8

DIVISION 8 - OPENINGS

Section 08 11 13 – Hollow Metal Doors and Frames 1-9
Section 08 31 00 – Access Doors and Panels 1-3
Section 08 71 00 – Door Hardware 1-16

DIVISION 9 - FINISHES

Section 09 21 16 – Gypsum Board Assemblies 1-16
Section 09 30 00 – Tiling 1-6
Section 09 51 23 – Acoustical Tile Ceiling 1-3
Section 09 65 00 – Resilient Flooring 1-7
Section 09 90 00 – Painting 1-9
Paint Schedule 1-7

DIVISION 10 - SPECIALTIES

Section 10 14 00 – Signage 1-3
Section 10 21 13 – Toilet Compartments 1-5
Section 10 28 00 – Toilet, Bath and Laundry Accessories 1-4
Section 10 44 00 – Fire Protection Specialties 1-2
Section 10 73 13 – Awnings 1-7

DIVISION 11 - EQUIPMENT

Sections 11 68 00 - Play Field Equipment & Structures

DIVISION 12 - FURNISHINGS

Not Used

DIVISION 13 - SPECIAL CONSTRUCTION
Section 13 11 00 - Spraygrounds

DIVISION 14 - CONVEYING EQUIPMENT

Not Used

DIVISION 15 THROUGH 20
Not Used

DIVISION 21 - FIRE SUPPRESSION
Not Used

DIVISION 22 - PLUMBING
See Drawings

DIVISION 23 - HEATING VENTILATING AND AIR CONDITIONING
See Drawings

DIVISION 24 THROUGH 25
Not Used

DIVISION 26 - ELECTRICAL
See Drawings

DIVISION 27 - COMMUNICATIONS
Not Used

DIVISION 28 - ELECTRONIC SAFETY AND SECURITY
Not Used

DIVISION 29 THROUGH 30
Not Used

DIVISION 31 – EARTHWORK
Section 31 10 00 - Site Clearing
Section 31 20 00 - Earth Moving

DIVISION 32 - EXTERIOR IMPROVEMENTS
Section 32 12 16 - Asphalt Paving
Section 32 13 13 - Concrete Paving
Section 32 13 73 - Concrete Paving Joint Sealants
Section 32 18 16.13 - Playground Protective Surfacing
Section 32 31 13 - Chain Link Fences & Gates
Section 32 92 00 - Turf & Grasses
Section 32 93 00- Plants

DIVISION 33 – UTILITIES

Section 33 05 00 - Common Work Results for Utilities
Section 33 10 00 - Facility Water Distribution Piping
Section 33 30 00 - Facility Sanitary Sewers
Section 33 41 00 - Storm Utility Drainage Piping
Section 33 46 00 - Subdrainage

SECTION 00 01 15
LIST OF DRAWINGS

GENERAL

G- 001	TITLE SHEET

CIVIL

C-0	SURVEY
C-1	SITE PREPARATION PLAN
C-2	GEOMETRIC PLAN
C-3	INTERIM CONSTRUCTION SWPP PLAN
C-3.1	POST SWPP & GRADING PLAN
C-4	UTILITY PLAN
C-5	SITE NOTES
C-6	SWPP NOTES & DETAILS
C-7	SWPP NOTES & DETAILS
C-8	SITE DETAILS
C-9	SITE DETAILS
C-10	SITE DETAILS
C-11	SITE DETAILS

LANDSCAPE

L- 1	LANDSCAPE PLAN

ARCHITECTURAL

AD- 101	DEMOLITION PLANS
A- 101	FIRST FLOOR PLAN
A- 102	FIRST FLOOR REFLECTED CEILING PLAN - PARTIAL FINISH PLAN
A- 401	INTERIOR ELEVATION AND DETAILS
A- 601	DOOR SCHEDULE AND DETAILS - ROOM FINISH SCHEDULE & LEGEND

ACQUATICS

SP0.0	SPRAYGROUND REFERENCE PLAN
SP1.0	SPRAYGROUND PLAN
SP1.1	SPRAYGROUND DETAILS
SP1.2	SPRAYGROUND DETAILS
SP2.0	SPRAYGROUND LOCATION POINT PLAN
SP3.0	SPRAYGROUND GRAVITY PIPING PLAN
SP3.1	SPRAYGROUND RETURN PIPING PLAN
SP4.0	SPRAYGROUND MECHANICAL ROOM PLAN & SECTIONS
SP4.1	SPRAYGROUND MECHANICAL DETAILS

PLUMBING

PD-101	PLUMBING DEMOLITION PLAN
P-101	PLUMBING PLAN
P-201	PLUMBING DEAILS & SCHEDULES
P-301	LUMBING ISOMETRICS

MECHANICAL

MD- 101	MECHANICAL DEMOLITION PLAN
M- 101	MECHANICAL PLAN
MP-401	MECHANICAL & PLUMBING SPECIFICATIONS

ELECTRICAL

ES-101	ELECTRICAL SITE PLAN
ED-101	ELECTRICAL DEMOLTION PLAN
E-101	ELECTRICAL POWER PLAN
E-102	ELECTRICAL LIGHTING PLAN
E-201	ELECTRICAL DETAILS, NOTES & SCHEDULES
E-202	ELECTRICAL DETAILS, NOTES & SCHEDULES
E-301	ELECTRICAL ONE-LINE DIAGRAM
E-401	ELECTRICAL SPECIFICATIONS
E-402	ELECTRICAL SPECIFICATIONS

END OF SECTION

SECTION 01 11 00
SUMMARY OF WORK

PART 1 GENERAL

1.01 RELATED DOCUMENTS

A. Drawings and General Provisions of Contract, including General Conditions and Division 1 Specification Sections, apply to the Work of this Section.

1.02 SUMMARY

A. Section Includes:

1. Description of Work
2. Definitions
3. Work covered by Contract Documents
4. Contractor Use of Premises
5. Bidding Classification
6. Standard Form of Contract Between Owner and Contractor
7. Quality Assurance
8. Owner Furnished Products
9. Owner Occupancy
10. Progress Schedule
11. Allowances
12. Tax Exempt Status
13. Hazardous Materials
14. Responsibility Matrix

1.03 DESCRIPTION OF WORK

A. Project Description:

1. The Project Entitled:

WATER PARK FACILITY PROJECT AT

EDWARD 'PEEL' COLEMAN CENTER

1400 Sherrick Road S.E. – Canton, OH 44707

B. Work Included: The work of this Project is shown on the Drawings and described in the various Sections of the Specification, and will include, but not be limited to, the following:

1. All work will be confined to the areas of the site as shown on the Drawings.
2. Work includes, but is not limited to, interior and exterior improvement including renovation of (2) existing locker room toilet/ shower areas, creation of (2) family changing rooms and utility equipment room. Exterior improvements include relocation on an entry drive and associated parking along with the addition of a spray park and associated park amenities. Relocation of site utilities associated with the partial vacation of Renick Ct.
3. Alternate Work includes all necessary labor & materials for the construction of:
   a. Alternate G1: Provide and install PRE-K PLAY STRUCTURE (2-5 yrs) and appropriate age sign.

b. Alternate G2: Provide and install SCHOOL AGE PLAY STRUCTURE (5-12 yrs) and appropriate age sign.

C. The Drawings and Specifications are complementary and what is required by any one shall be as binding as if required by all.

1.04 DEFINITIONS

A. Furnish: Purchase and deliver to project site, ready for installation.

B. Install: Unpack, assemble, set in final position, fasten in place, make final connections, clean, adjust, and leave ready for use.

C. Provide: Furnish and install.

D. Receive: Accepting a delivery.

E. Final Connections: Complete plumbing, mechanical, and electrical connections as required and recommended by manufacturer for optimum operation of equipment.

F. Drawings, Use of: Do not scale the Drawings. If the Contractor chooses to calculate measurements by scaling the Drawings, it is at his own risk and is not considered to be an accurate measurement. The Contractor is responsible for the accuracy of measurements, elevations, lines, and grades of the Work.

1.05 WORK COVERED BY CONTRACT DOCUMENTS

A. The work of this Project is shown on the Drawings and described in the various Sections of the Specification.

B. The Drawings and Specifications are complementary and what is required by any one shall be as binding as if required by all.

1.06 CONTRACTOR USE OF PREMISES

A. General: General Contractor shall limit their use of the premises to construction activities in areas indicated.

1. During the entire construction period, the Contractor shall provide access as required to maintain continuous operation of adjacent areas of the building and site, including required exit-ways for both vehicular and pedestrian traffic.

2. Confine operations to areas within Contract limits indicated. Portions of the site beyond areas in which construction operations are indicated are not to be disturbed.

3. Keep driveways and entrances serving the premises clear and available to the Owner at all times. Do not use these areas for parking or storage of materials. Schedule deliveries to minimize space and time requirements for storage of materials and equipment on site.

4. General Contractor to coordinate with Owner the use of the premises for available on-site Contractor parking.

B. General Contractor shall assume full responsibility for protection and safe keeping of products under this Specification.

1.07 BIDDING CLASSIFICATION

A. This project shall be performed under the following Prime Contracts:

1. General Contractor: The General Construction Contract includes architectural, civil, and structural construction plus other construction operations traditionally recognized as General Construction. It also includes administrative and coordination responsibilities.

B. A Project Labor Agreement (PLA) will be required for this contract.

1.08 STANDARD FORM OF CONTRACT BETWEEN OWNER AND CONTRACTOR

A. Contract Description: Construct the Work under the Contract as furnished by Owner.

1.09 QUALITY ASSURANCE

A. Qualifications of Contractors: In order to assure that Bidders are qualified to perform the work bid upon, the Owner, at his sole discretion, may require Bidder to submit a list of five (5) similar projects which have been completed by the Bidder. Such list shall include descriptions of the work performed and a specific person (reference) whom the Owner may contact. If Owner requires such list, submit promptly within five (5) days. Non-compliance may cause rejection of Bid.

B. It is the intent of the Owner and the Project Manual to conform with the AMERICANS WITH DISABILITIES ACT OF 1991.

1.10 OWNER FURNISHED PRODUCTS

A. Owner's Responsibilities:

1. Arrange for manufacturers' warranties, inspections, and service.

B. Contractor's Responsibilities:

1. Repair or replace items damaged after receipt.

C. Owner Furnished Products to be installed/relocated by the Contractor:

1. Items as indicated on drawings to be removed from present location and to be relocated on site during this contract.

1.11 OWNER OCCUPANCY

A. Owner will occupy areas of the premises during entire construction period for conduct of his normal operations. Cooperate with Owner in scheduling operations to minimize conflict and to facilitate Owner usage.

1. Maintain access to the existing parking lots by Owner, Employees, and patrons for the duration of construction. Coordinate with Owner for areas to be designated as contractor parking.

2. Coordinate with Owner to maintain access to existing adjacent facilities via alternates routes if required.

3. All locations of material transportation equipment, including cranes, hoists, etc., shall be as approved by the General Contractor, Owner and Architect.

1.12 PROGRESS SCHEDULE

A. A progress schedule listing the major items of work and dates of completion shall be submitted in bar-graph form for the Architect's and Construction Manager's approval no more than 10 days after the date of the Owner's award of Contract. This schedule shall be updated before every construction meeting.

B. Material Delivery Schedule:

1. The Contractors shall include in their Bid, all premium costs to obtain or divide orders for materials as required to meet all completion dates of Base Bid.

1.13 ALLOWANCES

A. Allowances include direct costs only. All costs for overhead and profit are included in the Base Bid.

1.14 TAX EXEMPT STATUS

A. City of Canton is exempt from the Ohio Retail Sales Tax, the Federal Manufacturer's Excise Taxes, (Refund of the Manufacturer's Tax, where paid, can be obtained by the manufacturer by filing I.R.S. Form 843), the Federal Transportation Tax where it is the consignee of the material shipped. City of Canton assumes no responsibility as to which items are tax exempt or not exempt. Tax ID No. shall be furnished upon request to successful bidder.

1.15 HAZARDOUS MATERIALS

A. In the event the Contractor encounters material reasonably believed to contain asbestos or other hazardous materials which have not been identified or rendered harmless, the Contractor shall immediately stop work in the area affected and report the condition to the Owner in writing. The work in the affected area shall be resumed in the absence of mold or asbestos, as verified by the Owner.

B. To the fullest extent permitted by law, the Owner shall indemnify and hold harmless the Contractor, Engineer, Architect and Architect's consultants and agents and employees of any of them from and against claims, damages, losses, and expenses, including, but not limited to, attorney's fees arising out of or resulting from performance of the work in the affected area if, in fact, the material is asbestos and has not been rendered harmless, provided that such claim, damage, loss, or expense is attributable to bodily injury, sickness, disease, or death, or to injury to or destruction of tangible property (other than the work itself), including loss of use resulting there from, but only to the extent caused in whole or in part by negligent acts or omissions of the Owner, anyone directly or indirectly employed by the Owner or anyone for whose acts the Owner may be liable, regardless of whether or not such claim, damage, loss, or expense if caused in part by a party indemnified hereunder. Such obligation shall not be construed to negate, abridge, or reduce other rights or obligations of indemnity which would otherwise exist as to a part or person described in this Subparagraph.

PART 2 PRODUCTS

Not Used

PART 3 EXECUTION

Not Used

PART 4 RESPONSIBILITY MATRIX

4.01 ITEMS TO BE FURNISHED BY OWNER / INSTALLED BY OWNER (FBO / IBO)

A. Locker rooms:

1. Chairs and freestanding benches

B. Toilet Accessories:

1. Shower curtains
2. Movable trash receptacles

C. General:

1. Custodial equipment other than items noted
2. Recycle bins
3. Security system, cameras, & cabling
4. Telephones / data equipment
5. IT equipment

4.02 ITEMS TO BE FURNISHED BY OWNER / INSTALLED BY CONTRACTOR (FBO/IBC)

A. None

4.03 ITEMS TO BE FURNISHED BY CONTRACTOR / INSTALLED BY CONTRACTOR (FBC/IBC)

A. Locker rooms:

1. Built-in benches
2. Solid plastic toilet partitions

B. Toilet Accessories:

1. ADA grab bars at accessible toilets
2. ADA grab bars at accessible showers
3. ADA folding seats at accessible showers
4. Wall mounted / surface mounted trash receptacles
5. Wall mounted mirrors

C. Signage:

1. Exterior room designation signage
2. Misc. traffic and parking signage

END OF SECTION 01 11 00

SECTION 01 23 00
ALTERNATES

PART 1 GENERAL

1.01 SUMMARY

A. Section Includes:

1. This Section includes administrative and procedural requirements for Alternates.
2. Identification and Description of Alternate Work.

B. Related Requirements

1. Notice to Bidders
2. Proposal Form
3. Summary of Work

1.02 DEFINITIONS

A. Alternate: An amount proposed by bidders and stated on the Bid Form for certain work defined in the Bidding Requirements that may be added to or deducted from the Base Bid amount if Owner decides to accept a corresponding change either in the amount of construction to be completed or in the products, materials, equipment, systems, or installation methods described in the Contract Documents.

1. The cost or credit for each alternate is the net addition to or deduction from the Contract Sum to incorporate alternate into the Work. No other adjustments are made to the Contract Sum.

1.03 PROCEDURES

A. Alternates will be exercised at the option of the Owner.

B. Coordinate related work and modify surrounding work as required to complete the Work, including changes under each Alternate, when acceptance is designated in Agreement.

C. The work to be executed under this Section shall include all labor, material, and equipment to add or deduct the Alternates as identified in this Specification.

D. All work that is added by Alternates shall match the Base Bid work.

E. Contractor shall request from their subcontractors, amounts to be added to or deducted from their Base Bids for Alternates affecting their section of work.

1.04 ALTERNATES - GENERAL

A. A "Schedule of Alternates" is included at the end of this Section. Refer to related Specification Sections and Drawings for the requirements for materials and methods necessary to achieve the work described under each Alternate.

B. Include as part of each Alternate, miscellaneous devices, accessory objects, and similar items incidental to or required for a complete installation, whether or not mentioned as a part of the Alternate.

C. Award of any, all, or none of the Alternates shall not affect the time proposal as established by each Contractor on the Bid Form.

D. Alternates may be awarded in any order and any combination, as solely determined by the Owner and the Architect.

1.05 NOTIFICATION

A. Immediately following the Award of Contract, each Contractor shall prepare and distribute to each of his parties involved, notification of the status of each Alternate.

PART 2 PRODUCTS

Not Used

PART 3 EXECUTION

3.01 SCHEDULE OF ALTERNATES

A. Alternate G1: Provide and install PRE-K PLAY STRUCTURE (2-5 yrs) and appropriate age sign.

B. Alternate G2: Provide and install SCHOOL AGE PLAY STRUCTURE (5-12 yrs) and appropriate age sign.

END OF SECTION 01 23 00

SECTION 01 26 00
CONTRACT MODIFICATION PROCEDURES

PART 1 GENERAL

1.01 SUMMARY

A. Section Includes:

1. Contract Modification Procedures:
   a. Submittals
   b. Documentation of Change in Contract Sum and Contract Time
2. Contract Modification Pricing Guidelines
3. Requests for Information and Supplemental Instructions
4. Change of Contract Procedures
5. Allowance Adjustment Procedures
6. Construction Change Directive
7. Change of Contract:
   a. Stipulated Price Change Order
   b. Unit Price Change Order
   c. Time and Material Change Order
   d. Execution of Change of Contract written orders
8. Correlation of Contractor Submittals

B. Related Sections:

1. Agreement: Monetary values of established unit prices and percentage allowances for Contractor's overhead and profit.
2. General Conditions: Governing requirements for changes in the Work, in Contract Sum and Contract Time.
3. Section 01 33 00 - Submittals and Substitutions: Construction Progress Schedules and miscellaneous submittals.
4. Section 01 77 00 – Closeout Procedures: Project Record Documents.

1.02 SUBMITTALS

A. Submit name of the individual authorized to receive change documents, and be responsible for informing others in Contractor's employ and Subcontractors of changes to the Work.

B. Change of Contract Forms: AIA Documents.

1.03 DOCUMENTATION OF CHANGE IN CONTRACT SUM AND CONTRACT TIME

A. Maintain detailed records of work performed on a time and material basis. Provide full information required for evaluation of proposed changes, and to substantiate costs of changes in the Work.

B. Document each quotation for a change in cost or time with sufficient data to allow evaluation of the quotation.

C. On request, provide additional data to support computations:

1. Quantities of products, labor, and equipment.
2. Taxes, insurance, and bonds.
3. Overhead and profit.
4. Justification for change in Contract Time.
5. Credit for deletions from Contract, similarly documented.

D. Support each claim for additional costs, and for work done, with additional information:

1. Origin and date of claim.
2. Dates and times work was performed, and by whom.
3. Time records and wage rates paid.
4. Invoices and receipts for products, equipment, and subcontracts, similarly documented.

1.04 MINOR CHANGES IN THE WORK

A. The Architect will issue supplemental instructions authorizing Minor Changes in the Work, not involving adjustment to the Contract Sum or Contract Time, on AIA Form G710, Architect's Supplemental Instructions.

1.05 REQUESTS FOR INFORMATION AND SUPPLEMENTAL INSTRUCTIONS

A. Definition: Requests for Information (RFI), is a formal process used during bidding and during construction to facilitate communication between the Contractor and the Architect with regard to requests for information and clarification of the intent of the Contract Documents.

1. Request for Information form may be used during bidding phase. Refer to Invitation to Bid and Instructions to Bidders.

B. Procedure:

1. Conditions Requiring Clarification of the Contract Documents: Submit a Request for Information to the Architect.

a. Submit Requests for Information from Contractor's office or field office only. Requests for Information submitted directly from subcontractors or suppliers will not be accepted.

b. Generate Requests for Information by one source per Project and number accordingly.

c. Submit one request for information per form.

2. The Architect will review formal requests from the Contractor with reasonable promptness and the Contractor will be notified in writing of decisions made, via the RFI form.

a. The Architect's response shall not be considered as a Change Order or Change Directive, nor does it authorize changes in the Contract Sum or Contract Time.

3. Maintain log of Requests for Information sent to, and responses from the Architect.

4. Scheduling, Costing, and Owner Furnished Products/Work Coordination: Direct to the Architect.

C. RFI Form: Submit requests for information on attached Request for Information form, attached at end of this Section. The Architect will not respond to requests for information unless this format is utilized.

1. Where submittal form does not provide space needed for complete information, additional sheets may be attached.

1.06 CHANGE PROCEDURES

A. The Architect will advise of minor changes in the Work not involving an adjustment to Contract Sum or Contract Time as authorized by the Owner/Architect Agreement, and by issuing Supplemental Instructions on RFI form attached at the end of this Section.

B. The Architect may issue a Proposal Request, Notice of Change which includes a detailed description of a proposed change with supplementary or revised Drawings and Specifications. Contractor will prepare and submit an estimate within 10 days.

C. The Contractor may propose a change by submitting a request for change to the Architect, describing the proposed change and its full effect on the Work, with a statement describing the reason for the change, and the effect on the Contract Sum and Contract Time with full documentation and a statement describing the effect on Work by separate or other contractors. Document requested substitutions in accordance with Section 01 33 00.

1.07 CONTRACT MODIFICATION PRICING GUIDELINES

A. For each change, the Contractor shall furnish a detailed, written proposal itemized according to these Pricing Guidelines. Any Subcontractor or Material Supplier pricing shall also be itemized according to these Pricing Guidelines. In order to expedite the review and approval process, all Proposals shall be prepared in the categories and in the order listed below.

1. Labor: All field labor shall be priced at the current base rate, excluding fringe benefits of the prevailing wage in the Project locality if applicable. The payroll is to be on straight time only and is to include number of hours and rate of pay for each classification of worker. If overtime is approved, list only the straight time portion in this item.

2. Fringes: All established payroll taxes, assessments and fringe benefits on the labor in item A. This may include, but is not limited to, FICA, Federal and State Unemployment, Health and Welfare, Pension Funds, Workers' Compensation and Apprentice Fund. Each of the fringes is to be a separate line item.

3. Equipment Rentals: All charges for certain non-owner heavy or specialized equipment at up to 100 percent of the documental rental cost. No rental charges will be allowed for hand tools, minor equipment, simple scaffolds, etc. Downtime due to repairs, maintenance and weather delays will not be allowed.

4. Owned Equipment: All charges for certain owned, heavy or specialized equipment at up to 100 percent of the cost listed by the Architect Equipment Dealers Blue Book. No recovery will be allowed for hand tools, minor equipment, simple scaffolds, etc. The longest period of time that the equipment is to be returned for the Work will be the basis for the pricing. Downtime due to repairs, maintenance and weather delays will not be allowed.

5. Trucking: A reasonable delivery charge or per-mile trucking charge for delivery of required materials or equipment. Charges for use of a pick-up truck will not be allowed.

6. Overhead: Overhead on Paragraph 1.07 items 1, 2, 3, 4, and 5: Up to 10 percent.

a. Overhead includes telephone, telephone charges, facsimile, telegrams, postage, photos, photocopying, hand tools, simple scaffolds (one level high), tool breakage, tool repairs, tool replacement, tool blades, tool bits, home office estimating and expediting, home office clerical and accounting support, home office labor (management, supervision, engineering), legal services, travel and parking expenses.

b. An exception is allowed for shop or engineering labor on item in 6.a above, which shall not be subject to prevailing wage rates, for steel fabricators, sheet metal fabricators and sprinkler system fabricators. Recovery will be allowed under items A.1 and A.2 of these Pricing Guidelines.

7. Materials:

   a. All materials purchased by the Contractor and incorporated into the changed Work, showing costs, quantities, or Unit Prices of all items, as appropriate. Reimbursement of material costs shall be allowed in the amount of the Contractor's actual cost, including any and all discounts, rebates or related credits.

   b. One-third (33 percent) of the cost of reusable materials for each use, such as formwork lumber, shoring or temporary enclosures.

8. Profit: Profit on Paragraph 1.07A, items 1, 2, 3, 4, 5, and 6: Up to 5 percent.

9. Subcontractor: The reasonable cost of all labor and material provided by a subcontractor whose pricing is included and which complies with these Pricing Guidelines.

10. Contractor Mark-up on Subcontractor: Mark-up on item 1: Up to 10 percent.

11. Miscellaneous: The following items are allowable at the cost of the Work, with no overhead or profit.

    a. The cost of extending the Bond and the cost of extending liability, property damage, builders risk or specialty coverage insurance.

    b. The premium portion only for approved overtime (labor and fringes). The straight time portion is included in item A.1.

    c. Fees for permits, licenses, inspections, tests, etc.

12. Costs which will not be reimbursed for Change Order Work include the following:

    a. Employee Profit Sharing Plans - regardless of how defined or described, the Contractor will pay these charges from Contractor profit and will not be reimbursed.

    b. Voluntary Employee Deductions - examples are United Way and U.S. Savings Bonds, etc.

13. Sales tax shall be allowed on items, where applicable by law.

    a. Refer to Section 01 11 00 - Summary of Work for Tax Exempt Status.

1.08 ALLOWANCES

A. Allowance Adjustment: For Allowance-cost adjustment, base each Change of Contract Proposal on the difference between the actual purchase amount and the Allowance, multiplied by the final measurement of work-in-place. Where applicable, include reasonable allowances for cutting losses, tolerances, mixing wastes, normal product imperfections, and similar margins.

   1. Include installation costs in the purchase amount only where indicated as part of the allowance.

   2. When requested, prepare explanations and documentation to substantiate the margins claimed.

   3. The Owner reserves the right to establish the actual quantity of work-in-place by independent quantity survey, measure, or count.

B. Submit claims for increased costs because of a change in scope or nature of the Allowance described in the Contract Documents, whether for the purchase order amount or the Contractor's handling, labor, installation, overhead, and profit. Submit claims within 21 days of receipt of the Change of Contract authorizing work to proceed. The Owner will reject claims submitted later than 21 days.

   1. Do not include the Contractor's or Subcontractor's indirect expense in the Change of Contract cost amount unless it is clearly shown that the nature or extent of work has changed from what could have been foreseen from information in Contract Documents.

2. No change to the Contractor's indirect expense is permitted for selection of higher or lower-priced materials or systems of the same scope and nature as originally indicated.

3. Refer to paragraph titled "Contract Modification Guidelines" above for additional requirements.

1.09 CORRELATION OF CONTRACTOR SUBMITTALS

A. Promptly revise Schedule of Values and Application for Payment forms to record each authorized Change of Contract as a separate line item and adjust the Contract Sum.

B. Promptly revise progress schedules to reflect any change in Contract Time, revise sub-schedules to adjust times for other items of work affected by the change, and resubmit.

C. Promptly enter changes in Project Record Documents.

PART 2 PRODUCTS

Not Used

PART 3 EXECUTION

Not Used

END OF SECTION 01 26 00

CONTRACTOR'S REQUEST FOR INFORMATION - RFI AND ARCHITECT'S SUPPLEMENTAL INSTRUCTIONS

Date	# of Pages
To	From
Co.	Co.
Phone #	Phone #
Fax #	Fax #

Project: _____ RFI No.: _____

Owner: _____ Date of Request: _____

To: _____ Contractor: _____
(Architect's Representative)

Project No.: _____ Contractor's Representative: _____

Architect's Fax No.: _____ Fax No.: _____

Information Requested: (Re: Specification Section/Drawing/Detail Number)

Requested by: _____

Architect's Supplemental Instructions:

Attachments:

Reply By: _____

The Work shall be carried out in accordance with these supplemental instructions issued in accordance with the Contract Documents without change in Contract Sum or Contract Time. Prior to proceeding with these instructions, indicate acceptance of these instructions below Work as consistent with the Contract Documents and return a copy to the Architect.

Supplemental Instructions Issued:

By: _____
Architect Date

Supplemental Instructions Accepted:

By: _____
Contractor Date

Cc: ☐ Owner ☐ Architect ☐ Consultant ☐ Contractor ☐ Field ☐ Other: _____

SECTION 01 31 00

PROJECT MANAGEMENT AND COORDINATION

PART 1 GENERAL

1.01 SUMMARY

A. Section Includes:

1. Coordination
2. Administrative Procedures
3. Meetings:
   a. Pre-construction Meetings
   b. Progress Meetings
   c. Preinstallation Meetings
4. Coordination Drawings
5. General Installation Provisions
6. Cleaning and Protection

B. Related Sections:

1. Section 01 11 10 - Summary of Work

1.02 COORDINATION

A. Coordinate construction activities included in various Sections of these Specifications to assure efficient and orderly installation of each component. Coordinate construction operations included under different Sections that depend on each other for proper installation, connection, and operation.

B. Where installation of one component depends on installation of other components before or after its own installation, schedule activities in the sequence required to obtain the best results.

C. Coordinate installation of different components to assure maximum accessibility for maintenance, service and repair.

D. Verify utility requirements and characteristics of operating equipment are compatible with building utilities. Coordinate work of various sections having interdependent responsibilities for installing, connecting to, and placing in service, such equipment.

E. Coordinate space requirements and installation of mechanical and electrical work which are indicated diagrammatically on Drawings. Follow routing shown for pipes, ducts, and conduit, as closely as practicable; place runs parallel with line of building. Utilize spaces efficiently to maximize accessibility for other installations, for maintenance, and for repairs.

F. In finished areas except as otherwise indicated, conceal pipes, ducts, and wiring within the construction. Coordinate locations of fixtures and outlets with finish elements.

G. Coordinate completion and clean up of Work of separate sections in preparation for Substantial Completion and for portions of Work designated for Owner's partial occupancy.

H. After Owner occupancy of premises, coordinate access to site for correction of defective Work and Work not in accordance with Contract Documents, to minimize disruption of Owner's activities.

I. Make provisions to accommodate items scheduled for later installation.

1.03 ADMINISTRATIVE PROCEDURES

A. Prepare memoranda for distribution to each party involved outlining required coordination procedures. Include required notices, reports, and attendance at meetings.

1. Prepare similar memoranda for the Owner and separate Contractors where coordination of their Work is required.

B. Coordinate scheduling and timing of administrative procedures with other activities to avoid conflicts and ensure orderly progress of the Work. Such activities include; but are not limited to, the following:

1. Preparation of Contractor's Construction Schedules
2. Preparation of the Schedule of Values
3. Installation and Removal of Temporary Facilities and Controls
4. Delivery and Processing of Submittals
5. Progress Meetings
6. Project Closeout Activities

C. Staff Names: Within 15 calendar days of Notice to Proceed, submit a list of Contractor's staff assignments, including Superintendent and personnel at the site; identify individuals, their duties and responsibilities, addresses and telephone numbers.

1.04 PRE-CONSTRUCTION MEETING

A. Agenda:

1. Execution of Owner-Contractor Agreement.
2. Submission of executed bonds and insurance certificates.
3. Distribution of Contract Documents.
4. Submission of lists of Subcontractors, Products, Schedule of Values, and Progress Schedule.
5. Designation of personnel representing the parties in Contract.
6. Procedures and processing of field decisions, Submittals, substitutions, Applications for Payments, proposal request, Change Orders, and Contract Closeout procedures.
7. Scheduling.

B. Record minutes and distribute copies within one day after meeting faxed to participants, with one copy to Architect, Owner, participants, and those affected by decisions made.

1.05 PROGRESS MEETINGS

A. Agenda:

1. Review minutes of previous meetings.
2. Review of Work progress.
3. Field observations, problems, and decisions.
4. Identification of problems which impede planned progress.
5. Review of submittals schedule and status of submittals.
6. Review of off-site fabrication and delivery schedules.
7. Maintenance of progress schedule.
8. Corrective measures to regain projected schedules.

9. Planned progress during succeeding work period.
10. Coordination of projected progress.
11. Maintenance of quality and work standards.
12. Effect of proposed changes on progress schedule and coordination.
13. Other business relating to Work.

1.06 PRE-INSTALLATION MEETINGS

A. When required in individual specification sections, convene a pre-installation meeting at work site prior to commencing work of the section.

B. Require attendance of parties directly affecting, or affected by, work of the specific Section.

C. Notify Architect four days in advance of meeting date.

D. Prepare agenda and preside at meeting:

1. Review conditions of installation, preparation and installation procedures.
2. Review coordination with related work.

E. Record minutes and distribute copies within one day after meeting faxed to participants, with one copy to Architect, Owner, participants, and those affected by decisions made.

1.07 COORDINATION DRAWINGS:

A. Prepare coordination drawings where close coordination is required for installation of products and materials fabricated off-site by separate entities, and where limited space necessitates maximum utilization of space for efficient installation of different components.

1. Show relationship of components shown on separate shop drawings.
2. Indicate required installation sequences.
3. Refer to Divisions 22 through 26 for requirements for plumbing and electrical installations.

PART 2 PRODUCTS

Not Used

PART 3 EXECUTION

3.01 INSPECTION OF CONDITIONS:

A. The installer of each component shall inspect the substrate and conditions under which work is performed. Do not proceed until unsatisfactory conditions have been corrected.

B. Verification of Conditions:

1. Verify that existing conditions, surfaces, and substrates are acceptable for subsequent Work.
2. Verify that field measurements, are as required to receive subsequent Work.
3. Verify that existing substrate is capable of structural support of new Work.
4. Examine and verify specific conditions described in individual Specification Sections.
5. Verify that utility services are available, of the correct characteristics, and in the correct location.

C. Report in writing to the Architect prevailing conditions that will adversely affect satisfactory execution of the Work of this Section. Do not proceed with Work until unsatisfactory conditions have been corrected.

D. By beginning Work, Contractor accepts conditions and assumes responsibility for correcting unsuitable conditions encountered at no additional cost to Owner.

3.02 PREPARATION

A. Clean substrate surfaces prior to applying next material or substance.

B. Seal cracks or openings of substrate prior to applying next material or substance.

C. Apply any manufacturer required or recommended substrate primer, sealer, or conditioner prior to applying any new material or substance in contact or bond.

3.03 MANUFACTURER'S INSTRUCTIONS:

A. Comply with the manufacturer's installation instructions and recommendations, to the extent that those instructions and recommendations are more explicit or stringent than requirements contained in Contract Documents.

B. Inspect materials or equipment immediately upon delivery and again prior to installation. Reject damaged and defective items.

C. Provide attachment and connection devices and methods necessary for securing work. Secure work true to line and level. Allow for expansion and building movement.

3.04 VISUAL EFFECTS:

A. Provide uniform joint widths in exposed work. Arrange joints in exposed work to obtain the best visual effect. Refer questionable choices to the Architect for final decision.

B. Recheck measurements and dimensions before starting each installation.

C. Install each component during weather conditions and project status that will ensure the best possible results. Isolate each part of the completed construction from incompatible material as necessary to prevent deterioration.

3.05 ENCLOSURE OF THE WORK:

A. Coordinate temporary enclosures with required inspections and tests, to minimize the necessity of uncovering completed construction for that purpose.

3.06 MOUNTING HEIGHTS:

A. Where mounting heights are not indicated, install individual components at standard mounting heights recognized within the industry for the particular application indicated. Refer questionable mounting height decisions to the Architect for final decision.

3.07 CLEANING AND PROTECTION:

A. During handling and installation, clean and protect construction in progress and adjoining materials in place. Apply protective covering where required to ensure protection from damage or deterioration at Substantial Completion.

B. Clean and maintain completed construction as often as necessary through the construction period. Adjust and lubricate operable components to ensure operability without damaging effects.

C. Limiting Exposures: Supervise operations to ensure that no part of construction, completed or in progress, is subject to harmful or deleterious exposure. Such exposures include, but are not necessarily limited to, the following:

1. Excessive Weathering

2. Excessively High or Low Temperatures or Humidity

3. Water or Ice

4. Chemicals or Solvents

5. Heavy Traffic, Soiling, Staining and Corrosion
6. Contact between Incompatible Materials
7. Theft or Vandalism
8. Excessive Static or Dynamic Loading
9. Thermal Shock
10. Combustion

END OF SECTION 01 31 00

SECTION 01 33 00
SUBMITTALS AND SUBSTITUTIONS

PART 1 GENERAL

1.01 SUMMARY

A. Wherever possible throughout the Contract Documents, the minimum acceptable quality of workmanship and materials has been defined either by manufacturer's name and catalog number or reference to recognized industry standards.

B. To ensure that the specified products are furnished and installed in accordance with the design intent, procedures have been established for advance submittal of design data for its review and approval or rejection by the Architect.

C. This Section specifies administrative and procedural requirements for submittals required for performance of the work, including:

1. Contractor's Construction Schedule
2. Shop Drawings, Product Data, and Samples
3. Certificates
4. Manufacturer Installation Instructions
5. Substitution Procedures
6. Manuals
7. Miscellaneous Submittals

D. Related Sections:

1. Contractual Requirements for Submittals: General Conditions
   a. Two (2) copies of all Submittals, plus number of copies to be returned to Contractor, shall be submitted unless otherwise specified.
   b. Provide additional copies as required for use in Project Record Documents.
2. Section 01 31 00 - Project Management and Coordination
3. Section 01 77 00 – Closeout Procedures
4. Individual Submittals Required: Pertinent Sections of these Specifications.

1.02 SUBMITTAL PROCEEDURES

A. Coordination: Coordinate preparation and processing of Submittals with performance of construction activities. Transmit each Submittal sufficiently in advance of performance of related construction activities to avoid delay.

1. Coordinate each Submittal with fabrication, purchasing, testing, delivery, other Submittals and related activities that require sequential activity.
2. Coordinate transmittal of different types of Submittals for related elements of the work so processing will not be delayed by the need to review Submittals concurrently for coordination.
   a. The Architect reserves the right to withhold action on a Submittal requiring coordination with other Submittals until related Submittals are received.
   b. No extension of Contract Time will be authorized because of failure to transmit Submittals to the Architect sufficiently in advance of the work to permit processing.

B. Deliver Submittals to the Architect.

C. Submittal Preparation: Place a permanent label or title block on each Submittal for identification. Indicate the name of the entity that prepared each Submittal on the label or title block.

1. Provide a space approximately 10" x 10" on the label or beside the title block on shop drawings to record the Contractor's and Architect review and approval markings and the action taken.

2. Include the following information on the label for processing and recording action taken:

a. Project Name

b. Name of the Owner

c. Date

d. Name and Address of Architect

e. Name and Address of Contractor

f. Name and Address of Subcontractor or Vendor

g. Location Where Item is to be Used

h. Name of Manufacturer

i. Drawing Number and Detail References, as Appropriate

j. Certification by the Contractor

D. Submittal Transmittal: Package each Submittal appropriately for transmittal and handling. Transmit each Submittal from Contractor to Architect. Submittals received from sources other than the Contractor will be returned without action.

1. Transmit each submittal to the Architect with "AIA Document G810 - Transmittal Letter".

2. Sequentially number the transmittal form. Revise submittals with original number and a sequential alphabetic suffix.

3. Identify Project, Contractor, Subcontractor or supplier; pertinent Drawing and detail number, and Specification Section number, as appropriate.

4. On the transmittal, record relevant information and requests for data. On the form, or separate sheet, record deviations from Contract Document requirements, including minor variations and limitations. Include Contractor's certification that information complies with Contract Document requirements.

5. After Architect's review of Submittal, revise and resubmit as required, identifying changes made since previous Submittal.

6. When resubmittal is required for any reason, transmit under new letter of transmittal, indicating by reference to a previous Submittal that this is a Resubmittal.

a. Identify on submittal all changes made since previous submission.

E. Distribute copies of reviewed Submittals to concerned persons. Instruct recipients to promptly report any inability to comply with provisions.

F. All Submittals shall bear the stamp of approval of the General Contractor submitting same as evidence that they have been checked by them, or they will be rejected.

1. Must be signed or initialed certifying that review, verification of Products required, field dimensions, adjacent construction Work, and coordination of information, is in accordance with the requirements of the Work and Contract Documents.

G. Schedule submittals to expedite the Project, and deliver to Architect. Coordinate submission of related items. Instruct parties to promptly report any inability to comply with provisions.

1.03 CONTRACTOR'S CONSTRUCTION SCHEDULE

A. Bar-Chart Schedule: The Contractor for General Construction shall prepare a fully-developed, horizontal bar-chart type Contractor's construction schedule, with a copy to each subcontractor. Submit within 10 days of the date established for the Notice to Proceed. **No work is to begin on Project site until schedule has been approved by the Architect and the Owner.**

1. Provide a separate time bar for each significant construction activity. Provide a continuous vertical line to identify the first working day of each week. Use the same breakdown of units of the work as indicated in the "Schedule of Values".

2. Within each time bar, indicate estimated completion percentage in 10 percent increments. As work progresses, place a contrasting mark in each bar to indicate Actual Completion.

3. Prepare the schedule on a sheet, or series of sheets, of stable transparency, or other reproducible media, of sufficient width to show data for the entire construction period.

4. Secure time commitments for performing critical elements of the work from parties involved. Coordinate each element on the schedule with other construction activities. Include minor elements involved in the sequence of the work. Show each activity in proper sequence. Indicate graphically, sequences necessary for completion of related portions of the work.

5. Indicate completion in advance of the date established for Substantial Completion. Indicate Substantial Completion on the schedule to allow time for the Architect's procedures necessary for certification of Substantial Completion.

6. If adjustments are necessary for sequencing and coordination of the work, the Contractor for General Construction shall arrange a meeting with the other contractors at the earliest possible date. At this meeting, each contractor shall negotiate reasonable adjustments to their schedules.

B. Schedule Updating: Revise the schedule after each meeting or activity where revisions have been recognized or made. Issue the updated schedule concurrently with report of each meeting.

1.04 SHOP DRAWINGS

A. Where shop drawings are required, submit newly prepared information drawn to accurate scale. Highlight, encircle, or otherwise indicate deviations from the Contract Documents. Do not reproduce Contract Documents or copy standard information as the basis of shop drawings. Standard information prepared without specific reference to the Project is not considered shop drawings.

1. Contractor may purchase on request for purposes of base plan information only electronic files at a cost of $100.00 per file, contingent upon the signing a CADD File Use Agreement, provided by the Architect or their Consultant.

B. Shop Drawings shall be drawn at a scale to clearly indicate all of the above conditions and allow for corrections or modifications which the Architect may wish to make. The Architect shall be the sole judge as to the acceptability of manufacturer's literature and catalog sheets as shop drawings.

C. Shop Drawings shall clearly indicate all dimensional data for all parts of the item; types and materials for all connections; finishes; the exact relation of the item to adjacent materials and equipment in the completed structure including clearance, any necessary isolation, and fastening methods and devices; and mechanical and electrical connections.

D. Shop Drawings include fabrication and installation drawings, setting diagrams, schedules, patterns, templates, and similar drawings. Include the following information:

1. Dimensions
2. Identification of Products and Materials Included
3. Compliance with Specified Standards
4. Notation of Coordination Requirements
5. Notation of Dimensions Established by Field Measurement

E. Sheet Size: Except for templates, patterns, and similar full-size drawings, submit shop drawings on sheets at least 8-1/2" x 11", but no larger than 36" x 48".

F. Submit in the form of one reproducible transparency and one opaque reproduction, or three opaque reproductions plus required amount to be returned to Contractor. After review, reproduce and distribute to appropriate parties.

G. Do not permit shop drawing copies, without an appropriate final "Action" marking by the Architect, to be used in connection with the work.

H. The Contractors shall be responsible for distribution of additional prints to vendors, etc.

I. Maintain approved copies of shop drawings, as returned, at the Project site throughout the course of construction.

J. Refer to General Conditions for additional requirements.

1.05 COORDINATION DRAWINGS

A. Comply with requirements in Division 1 Section "Project Management and Coordination."

1.06 PRODUCT DATA

A. Where product data is required, collect product data into a single submittal for each element of construction or system. Product data includes printed information such as manufacturer's installation instructions, catalog cuts, standard color charts, roughing-in diagrams and templates, standard wiring diagrams and performance curves. Where product data must be specially prepared because standard printed data is not suitable for use, submit as "shop drawings."

1. Mark each copy to show applicable choices and options. Where printed product data includes information on several products, some of which are not required, mark copies to indicate the applicable information. Include the following information:

a. Manufacturer's Printed Recommendations
b. Compliance with Recognized Trade Association Standards
c. Compliance with Recognized Testing Agency Standards
d. Application of Testing Agency Labels and Seals
e. Notation of Dimensions Verified by Field Measurement
f. Notation of Coordination Requirements
g. Type and Model Numbers

2. Do not submit product data until compliance with requirements of the Contract Documents has been confirmed.

B. Distribution: Furnish copies of final Submittal to installers, subcontractors, suppliers, manufacturers, fabricators, and others required for performance of construction activities. Show distribution on transmittal forms.

1. Do not proceed with installation until a copy of product data applicable is in the installer's possession.

2. Do not permit use of unmarked copies of product data in connection with construction.

3. Maintain approved copies of product data, as returned, at the Project site throughout the course of construction.

1.07 SAMPLES

A. Where samples are required, submit full-size, fully fabricated samples cured and finished as specified and physically identical with the material or product proposed. Samples include partial sections of manufactured or fabricated components, cuts or containers of materials, full color-range sets, and swatches showing color, texture, and pattern.

1. Mount, display, or package Samples in the manner specified to facilitate review of qualities indicated. Include the following:

a. Generic Description of the Sample

b. Sample Source

c. Product Name or Name of Manufacturer

d. Compliance with Recognized Standards

e. Availability and Delivery Time

2. Colors: Unless the precise color and pattern is specifically described in the Contract Documents, whenever a choice of color or pattern is available in a specified product, submit accurate color charts and pattern charts to the Architect for their review and selection.

3. Submit Samples for review of kind, color, pattern, and texture for a final check of these characteristics with other elements and for a comparison of these characteristics between the final Submittal and the actual component as delivered and installed.

a. Where variation in color, pattern, texture, or other characteristics are inherent in the material or product represented, submit multiple units (not less than 3) that show approximate limits of the variations.

b. Refer to other Specification Sections for requirements for samples that illustrate workmanship, fabrication techniques, details of assembly, connections, operation, and similar construction characteristics.

c. Refer to other Sections for samples to be returned to the Contractor for incorporation in the work. Such samples must be undamaged at time of use. On the transmittal, indicate special requests regarding disposition of sample submittals.

4. Preliminary Submittals: Where samples are for selection of color, pattern, texture, or similar characteristics from a range of standard choices, submit a full set of choices for the material or product.

a. Preliminary Submittals will be reviewed and returned with the Architect's mark indicating selection and other action.

5. Maintain sets of samples, as returned, at the Project site for quality comparisons throughout the course of construction.

a. Unless noncompliance with Contract Document provisions is observed, the Submittal may serve as the final Submittal.

b. Sample sets may be used to obtain final acceptance of the construction associated with each set.

B. Distribution of Samples: Prepare and distribute additional sets to subcontractors, manufacturers, fabricators, suppliers, installers, and others as required for performance of the work.

1. Field Samples specified in individual Sections are special types of samples. Field samples are full-size examples erected on site to illustrate finishes, coatings, or finish materials and to establish the standard by which the work will be judged.

a. Comply with submittal requirements to the fullest extent possible. Process transmittal forms to provide a record of activity.

1.08 CERTIFICATES

A. Insurance Certificates and Bonds: Prepare written information indicating current status of insurance or bonding coverage. Include name of entity covered by insurance or bond, limits of coverage, amounts of deductibles, if any, and term of the coverage.

B. When specified in individual Specification Sections, submit certification by manufacturer to Architect, in quantities specified for product data. Prepare written statements on manufacturer's letterhead certifying that manufacturer complies with requirements. Include evidence of manufacturing experience where required.

C. Indicate material or Product conforms to or exceeds specified requirements. Submit supporting reference data, affidavits, and certifications as appropriate.

D. Certificates may be recent or previous test results on material or product, but must be acceptable to Architect.

E. Welding Certificates: Prepare written certification that welding procedures and personnel comply with requirements. Submit record of Welding Procedure Specification (WPS) and Procedure Qualification Record (PQR) on AWS forms. Include names of firms and personnel certified.

F. Installer Certificates: Prepare written statements on manufacturer's letterhead certifying that Installer complies with requirements and, where required, is authorized for this specific Project.

1.09 MANUFACTURER INSTALLATION INSTRUCTIONS

A. When specified in individual Specification Sections, submit printed instructions for delivery, storage, assembly, installation, start-up, adjusting, and finishing to Architect.

B. Indicate special procedures, perimeter conditions requiring special attention, and special environmental criteria required for application or installation.

C. Manufacturer's Field Reports: Prepare written information documenting factory-authorized service representative's tests and inspections. Include the following, as applicable:

1. Name, address, and telephone number of factory-authorized service representative making report.

2. Statement on condition of substrates and their acceptability for installation of product.

3. Statement that products at Project site comply with requirements.

4. Summary of installation procedures being followed, whether they comply with requirements and, if not, what corrective action was taken.

5. Results of operational and other tests and a statement of whether observed performance complies with requirements.

6. Statement whether conditions, products, and installation will affect warranty.

1.10 TEST REPORTS

A. Material Test Reports: Prepare reports written by a qualified testing agency, on testing agency's standard form, indicating and interpreting test results of material for compliance with requirements.

B. Pre-construction Test Reports: Prepare reports written by a qualified testing agency, on testing agency's standard form, indicating and interpreting results of tests performed before installation of product, for compliance with performance requirements.

C. Compatibility Test Reports: Prepare reports written by a qualified testing agency, on testing agency's standard form, indicating and interpreting results of compatibility tests performed before installation of product. Include written recommendations for primers and substrate preparation needed for adhesion.

D. Field Test Reports: Prepare reports written by a qualified testing agency, on testing agency's standard form, indicating and interpreting results of field tests performed either during installation of product or after product is installed in its final location, for compliance with requirements.

E. Product Test Reports: Prepare written reports indicating current product produced by manufacturer complies with requirements. Base reports on evaluation of tests performed by manufacturer and witnessed by a qualified testing agency, or on comprehensive tests performed by a qualified testing agency.

1.11 MISCELLANEOUS SUBMITTALS

A. Application for Payment: Comply with requirements in Division 1 Sections.

B. Schedule of Values: Comply with requirements in Division 1 Sections.

C. Subcontractor List: Prepare a written summary identifying individuals or firms proposed for each portion of the Work, including those who are to furnish products or equipment fabricated to a special design. Include the following information in tabular form:

1. Name, address, and telephone number of entity performing subcontract or supplying products.

2. Number and title of related Specification Section(s) covered by subcontract.

3. Drawing number and detail references, as appropriate, covered by subcontract.

D. Qualification Data: Prepare written information that demonstrates capabilities and experience of firm or person. Include lists of completed projects with project names and addresses, names and addresses of architects and owners, and other information specified.

E. Design Data: Prepare written and graphic information, including, but not limited to, performance and design criteria, list of applicable codes and regulations, and calculations. Include list of assumptions and other performance and design criteria and a summary of loads. Include load diagrams if applicable. Provide name and version of software, if any, used for calculations. Include page numbers.

F. Manufacturer's Instructions: Prepare written or published information that documents manufacturer's recommendations, guidelines, and procedures for installing or operating a product or equipment. Include name of product and name, address, and telephone number of manufacturer. Include the following, as applicable:

1. Prepare written and graphic instructions and procedures for operation and normal maintenance of products and equipment. Comply with requirements in Division 1 Section "Closeout Procedures and Operation and Maintenance Data."

2. Preparation of substrates.

3. Required substrate tolerances.

4. Sequence of installation or erection.

5. Required installation tolerances.

6. Required adjustments.

7. Recommendations for cleaning and protection.

G. Other required items indicated in individual Specification Sections.

1.12 CONTRACTOR'S REVIEW

A. Review each submittal and check for compliance with the Contract Documents. Note corrections and field dimensions. Mark with approval stamp before submitting to Architect.

1. Architect will not review submittals that do not bear Contractor's approval stamp and will return them without action.

B. Approval Stamp: Stamp each submittal with a uniform, approval stamp. Include Project name and location, submittal number, Specification Section title and number, name of reviewer, date of Contractor's approval, and statement certifying that submittal has been reviewed, checked, and approved for compliance with the Contract Documents.

1. Compliance with specified characteristics is the Contractor's responsibility

1.13 ARCHITECT'S ACTION

A. Except for Submittals for record, information or similar purposes, where action and return is required or requested, the Architect will review each Submittal, mark to indicate action taken, and return promptly.

B. Action Stamp: The Architect will stamp each Submittal with a uniform, self-explanatory action stamp. The stamp will be appropriately marked, as follows, to indicate the action taken:

1. Final Unrestricted Release: Where Submittals are marked "CONFORMS AS SUBMITTED", that part of the work covered by the Submittal may proceed, provided it complies with requirements of the Contract Documents. Final payment will depend upon that compliance.

2. Final-but-Restricted Release: When Submittals are marked "CONFORMS AS NOTED", that part of the work covered by the Submittal may proceed, provided it complies with notations or corrections on the Submittal and requirements of the Contract Documents. Final payment will depend on that compliance.

3. Returned for Resubmittal: When Submittal is marked "REVISE AND RESUBMIT", do not proceed with that part of the work covered by the Submittal, including purchasing, fabrication, delivery, or other activity. Revise or prepare a new Submittal in accordance with the notations. Resubmit without delay. Repeat, if necessary, to obtain a different action mark.

a. Do not permit submittals marked "REVISE AND RESUBMIT" to be used at the Project site or elsewhere where work is in progress.

4. Other Action: Where a Submittal is primarily for information or record purposes, special processing or other activity, the Submittal will be returned marked "ACTION NOT REQUIRED".

PART 2 PRODUCTS

2.01 SUBSTITUTIONS

A. Source Limitations: To the greatest extent possible for each unit of work, provide products, materials, or equipment of a singular generic kind from a single source.

B. Compatibility of Options: Where more than one choice is available as options for Contractor's selection of a product or materials, select an option which is compatible with other products and materials already selected (which may have been from among options for those other products and materials). Total compatibility among options, if not assured by limitations within contract documents, must be provided by Contractor. Compatibility is a basic general requirement of product/material selections.

C. Architect's Approval Required:

1. The Contract is based on the materials, equipment, and methods described in the Contract Documents.

2. The Contract Drawings and Specifications establish the "minimum standard of quality" each product and/or system must meet to be considered acceptable. Products of other manufacturers will be considered if the product and/or system meets or exceeds the "minimum standard of quality" established by the Contract Documents.

3. The Architect will consider proposals for substitutions under the "or approved equal" provision of materials, equipment, and methods by Addendum, prior to Bid due date, only when such proposals are accompanied by full and complete technical data and all other information required by the Owner and Architect to evaluate the proposed substitutions.

   a. Proposals for substitutions are to be submitted by Bidders only. Submissions by other Contractors or suppliers will not be accepted.

   b. It will be the responsibility of the submitting Contractor to prove equality.

   c. The Submittal shall include a line-by-line, item-by-item description of the specified and proposed product.

4. Requests for substitutions must be submitted to the Architect NO later than fourteen (14) calendar days prior to Bid due date.

5. If the proposed product and/or system is acceptable as an equal, as herein described, an Addendum will be issued noting the specific items accepted.

6. DO NOT SUBSTITUTE MATERIALS, EQUIPMENT, OR METHODS UNLESS SUCH SUBSTITUTIONS HAVE BEEN SPECIFICALLY APPROVED FOR THIS WORK BY THE ARCHITECT, BY ADDENDUM.

D. "Or Approved Substitution" or "Or Approved Equal":

1. Where the phrase "or approved substitution" or "or approved equal" occurs in the Contract Documents, do not assume that material, equipment, or methods will be approved as equal by the Owner and Architect unless the item has been specifically approved for this work by the Owner and Architect.

   a. Color choices as well as match to existing materials will be determining factors for approval.

2. The decision of the Architect will be final.

E. Availability of Specified Items:

1. Verify prior to bidding that all specified items will be available in time for installation during orderly and timely progress of the work.

2. In the event specified item or items will not be so available, so notify the Architect prior to the receipt of Bids.

3. Costs of delay caused on non-availability of specified items, when such delays could have been avoided by the Contractor, will be back-charged as necessary and shall not be borne by the Owner.

F. Whenever the Contractor secures approval for changing any items and such change involves a corresponding change or adjustment in any adjacent or related item, the responsibility for making the required change, or seeing that it is made, rests with the Contractor. The cost of these changes and/or adjustments shall be paid for by the Contractor unless it is otherwise agreed, in writing, at the time the change is approved. The acceptance of any change will not, in any way, relieve the Contractor from full compliance with the Contract Documents.

2.02 MANUALS

A. General: Where Manuals are required to be submitted covering items included in this work, prepare all such Manuals in durable plastic binders approximately 8-1/2 x 11 inches in size with at least the following:

1. Identification on or readable through the front cover stating the general nature of the Manual.

2. Neatly typewritten index near the front of the Manual furnishing immediate information as to location of all emergency data regarding the installation.

3. Complete instructions regarding operating and maintenance of all equipment involved.

4. Complete nomenclature of all replaceable parts, their part numbers, current cost, and name and address of nearest vendor of parts.

5. Copy of all guarantees and warranties issued.

6. Copy of approved shop drawing(s) with all data concerning all changes made during construction.

2.03 MISCELLANEOUS SUBMITTALS

A. Inspection and Test Reports Not Performed by Owner: Classify each inspection and test report as being either "shop drawings" or "product data" depending on whether the report is specially prepared for the Project or a standard publication of workmanship control testing at the point of production. Process inspection and test reports accordingly.

B. Warranties (Guarantees):

1. Categories of Specific Warranties: Warranties on the work are in several categories, including those of General Conditions, and including (but not necessarily limited to) the following specific categories related to individual units of work specified in sections of Divisions 02 through 33 of these Specifications.

a. Special Project Warranty (Guarantee): A warranty specifically written and signed by Contractor for a defined portion of the work and, where required, countersigned by Subcontractor, installer, manufacturer, or other entity engaged by Contractor.

b. Specified Product Warranty: A warranty which is required by Contract Documents, to be provided for a manufactured product incorporated into the work, regardless of whether manufacturer has published a similar warranty without regard for specific incorporation of product into the work, or has written and executed a special project warranty as a direct result of Contract Documents requirements.

c. Coincidental Product Warranty: A warranty which is not specifically required by Contract Documents (other than as specified in this Section), but which is available on a product incorporated into the work by virtue of the fact that manufacturer of product has published warranty in connection with purchases and uses of product without regard for specific applications, except as otherwise limited by terms of warranty.

C. Construction Photos: Email digital photos monthly, to the Architect.

1. Use minimum 3 megapixel type digital camera.

2. Provide necessary number of photographs, as required to document existing conditions to verify damage to adjacent property which may or may not have occurred during construction: Minimum 12 photos monthly.

PART 3 EXECUTION

3.01 COORDINATION OF SUBMITTALS

A. General: Prior to submittal for Architect's review, use all means necessary to fully coordinate all material, including the following:

1. Secure all necessary approvals from public agencies and others. Signify by stamp or other means that all required approvals have been obtained.

2. Clearly indicate all deviations from the Contract Documents.

B. The General Contractor shall submit a prioritized tabulation by date of Submittals required during the first 90 days of construction. List those Submittals required to maintain orderly progress of the work, and those required early because of long lead time for manufacture or fabrication.

1. These dates may be shown on Construction Project Schedule at Contractor's option.

3.02 TIMING OF SUBMITTALS

A. General:

1. Make all Submittals enough in advance of scheduled dates for installation to provide all required time for reviews for securing necessary approvals, for possible revision and Resubmittals, and for placing orders and securing delivery.

2. In scheduling, allow a minimum of twenty (20) full calendar days for the Architect's initial review following receipt of the Submittals. Allow additional time if the Architect requires coordination with subsequent Submittals.

a. The Architect reserves the right to withhold action on a submittal requiring coordination with other submittals until all related Submittals are received.

b. If an Intermediate Submittal is necessary, process the same as the initial Submittal. Allow fourteen (14) calendar days for reprocessing each Submittal.

END OF SECTION 01 33 00

SECTION 01 35 00

SPECIAL PROJECT PROCEDURES

PART 1 GENERAL

1.01 RELATED DOCUMENTS

A. Drawings and General Provisions of Contract, including General and Supplementary Conditions and Division 01 Specification Sections, apply to work of this Section.

B. All Contractors shall be governed by all applicable Sections of these Documents with reference to their respective areas of work. It shall be the responsibility of the Contractors to apprise their Subcontractors and suppliers of these requirements.

1. The General Contractor and each subcontractor shall review all Sections of the Specifications and all Drawings and is responsible for all work pertaining to their trade regardless of Drawing or Section of Specifications it is written in.

C. Substitutions

1. The Specifications are based on the first product or manufacturer listed. Refer to Section 01 30 00, "Submittals and Substitutions", for instructions regarding substitutions, and "Approved Equals".

2. Deviations or substitutions not properly approved and authorized will be considered defective work. Payment will not be made for improper changes or substitutions.

D. Refer to Section 01 11 00 Summary of Work for additional Project contacts.

1.02 GENERAL

A. The Contractor and each subcontractor affirmatively represents that they are skilled and experienced in the performance of work as required by this Project and in the use and interpretation of Drawings and Specifications such as those included in the Contract Documents; that they have carefully reviewed the Drawings and Specifications of this Project; and that their Contract is based solely on these Documents, not relying in any way on any explanation or interpretations - oral or written - from any other source. The Contractor agrees that it shall be conclusively presumed that the Contractor has exercised his aforementioned skill and experience and found the Drawings and Specifications sufficient and free from ambiguities, errors, or omissions for the purpose of determining its Contract for the performance of the work in conformity with the Drawings, Specifications, and all other Contract Documents.

B. Each Contractor shall provide sufficient and adequate labor, materials and construction equipment necessary to properly correlate all phases of the work to the end that the approved Progress Schedule can be adhered to and the Contract Completion date met.

C. Overtime Work

1. Unless noted otherwise, or so directed by the Architect or the Owner, The General Contractor is solely responsible for all required costs, including standby required by other trades, if Contractor works premium hours (after regular hours, weekends, holidays, etc.).

D. In no case shall any Contractor proceed with work uncertainty.

E. The Contractor will ensure that all the Contractor's and subcontractor's employees, while working on the property, will not purchase, transfer, use or possess illegal drugs, or alcohol or abuse prescription drugs in any way.

1. No foul or profane language, loud music or other disturbances will be permitted or tolerated at anytime.

2. No guns, firearms, drugs or alcoholic beverages shall be permitted anywhere on the premises - including within any vehicles.

3. No smoking or use of tobacco in any form shall be permitted within any building.

1.03 COMMUNICATIONS

A. The Contractor shall forward all communications to the Owner through the Architect.

B. Request for Information (RFI) and Supplemental Instructions:

1. It shall be the Contractor's obligation to check the Contract Documents and to request of the Architect any clarification necessary and in time so as not to delay the progress of the Work.

1.04 ACCESS TO AND SECURITY OF SITE AND BUILDING

A. Access to and security of the Project site are the responsibility of the Contractor and not that of the Owner or the Architect.

1. All construction personnel shall protect work, existing facilities, and Owner's operations from unauthorized entry, vandalism, and theft.

2. In those areas where work occurs, access and egress shall be as directed by the Architect and working areas shall be confined to within a specific area as directed by the Architect.

3. Existing buildings adjoining the area of work, except those areas in which work is to occur, shall not be entered for any reason.

1.05 RELATIONS WITH ADJOINING PROPERTY OWNERS

A. To facilitate his work, the Contractor may choose to make necessary arrangements for use and subsequent rehabilitation of the adjoining Owner's property. Such arrangements are solely the Contractor's responsibility.

1.06 USE OF SITE

A. The Owner's property can be used for limited parking, storage, and construction trailers, only in location as directed and approved by the Owner.

1. No contractor affiliated vehicle is to be operated on sidewalks at anytime without specific approval by the Owner.

2. Use only designated areas for parking and storage as directed by Owner.

B. Keep driveways and entrances serving the premises clear and available to the Owner at all times. Do not use these areas for parking or storage of materials. Schedule deliveries to minimize space and time requirements for storage of materials and equipment on site. Existing Fire Lanes shall not be blocked at any time.

C. A minimum of two (2) weeks notice to the Owner shall be provided for all street blocking outside of the construction limits.

D. Material Delivery and Storage:

1. The primary delivery and staging area will be as directed by the Owner. Limited vehicular access as required by the phasing of construction and as approved by the Architect will be permitted on accessible sides of the site. The General Contractor will restore all damaged items upon project completion.

2. It shall be the responsibility of the Contractor to direct all deliveries to the construction site and not the Architect, or the Owner.

a. Temporary storage facilities shall be provided to protect equipment and/or materials delivered to the job site which may be damaged by exposure to weather. It shall be the General Contractor's responsibility to provide all labor and materials necessary

to provide such protection. The Owner shall be consulted as to the "adequacy" of such temporary protection.

E. All Contractors shall exercise control over all trucks and equipment using public roads and the Owner's property to preclude spillage, tracking of dirt or debris thereon. Should spillage occur, that Contractor is held to promptly clean and remove same.

1. Mud from the construction site shall be removed from public and the Owner's roads daily. Failure to remove mud promptly could result in roads being cleaned by the Owner at the responsible Contractor's expense.

F. Towing On Site

1. The General Contractor is responsible for providing any temporary hardstands (granular material, crane mats, etc.) and towing equipment required to continue with work so as not to delay the Project.

1.07 EXISTING BUILDING

A. The Owner will occupy the existing building during the life of the Project. All work shall be scheduled at such time and in such a manner to minimize interference and inconvenience to the Owner. Contractors shall obtain the approval of the Owner's Representative before starting any work within the building.

1. Construction work shall not interfere with the Owner's operations. There will be no compromise on this requirement.

B. The Contractors shall, at all times, proceed in a manner to ensure that the Owner's personnel shall have full use of the building, including utilities, existing parking areas, and recreation fields. The Contractors shall include in their proposals the cost of all premium time required for work necessary to prevent interruption of building services or the disruption of the Owner's personnel during their working hours.

1. Construction operations shall be reviewed by the Architect prior to commencement of the work.

2. Where parts of the Project require interruption of electrical service for rewiring and relighting, the Contractor shall make arrangements with the Architect to establish times at which the work can be done.

3. Extra precautions shall be taken if interruption of service to occupied areas is necessary, including building power or any electrically operated system.

4. In order to ensure that the above requirement is met, the Contractor shall take positive steps to prevent dust, noise, disruption of utilities, and similar hazards resulting from construction work from either interfacing with or damaging the Owner's furniture and equipment.

5. Protective measures shall be substantial and positive and subject to no element or risk. All protective measures shall be reviewed by the Architect before they are incorporated into the work.

6. Dust Control: Each Contractor is responsible to completely control dust during the performance of their work, including any and all necessary measures such as watering, etc. This also includes dust control during operations on the part of the Contractor in which services are provided by others. This cost is the responsibility of the Contractor.

7. All measurements given in the Documents shall be verified at the existing site before any work is executed by each Contractor, and any discrepancy between the Documents and the actual conditions shall be reported immediately to the Architect.

8. Any damage to areas outside of the Project area, resulting from the construction operation or caused by the Contractor's personnel, shall be restored to preconstruction condition at the Contractor's expense to the satisfaction of the Architect.

1.08 SUPERINTENDENT

A. The General Contractor's Superintendent shall be at the job full-time continuously from the start of the job.

1. The term "full-time" is hereby defined as "each working hour each working day". The Contractor will not be permitted to maintain "part-time" Superintendent.

2. The Superintendent shall not be removed from the job until after final acceptance of the work or until completion of all "Punch List" items.

B. The Contractor's Superintendent shall maintain up-to-date records, including as-built Drawings.

1.09 PERMITS, FEES, DEPOSITS, AND NOTICES

A. The General Contractor shall secure and pay for all permits and certificates of inspection incidental to this work required by City, County, State, or any other governing authority having jurisdiction over premises.

B. The General Contractor shall ensure that all Subcontractors and Sub-subcontractors have obtained all permits, paid all fees, made any required deposits, and posted all notices required by law before any of their work is started.

C. Should it be required that any permits or notices be posted at the job site, the General Contractor shall make proper provision for such posting with adequate protection for their preservation throughout the course of the work.

D. Copies of all permits shall be sent to the Owner's Representative and the Architect by the Prime Contractor.

E. The General Contractor will coordinate all required inspections by governing authorities.

1.10 MEETINGS

A. Before any work is started, responsible representatives for the General Contractor, including his designated job superintendent for the Project, shall meet at the Site with the Architect and the Owner's representative to review the requirements and conditions under which the Project will be performed.

B. Progress meetings shall be held at the Site under the direction of the Architect. The General Contractor and other major subcontractors shall attend or be represented by someone fully empowered to speak for and commit them to any agreement reached.

1.11 DAILY WORK REPORT

A. The General Contractor shall submit to the Architect by Friday of each week, a weekly construction report on a form approved by the Architect. The report must include the number of men working on the job for that day, a brief description of the work accomplished and the areas in which the Contractor is working.

1.12 EXAMINATION AND VERIFICATION OF THE SITE

A. All Contractors submitting proposals for this work shall first examine the site and all conditions thereon. All proposals shall take into consideration all such conditions as may affect the work under this Contract.

B. Grades, Lines, Levels, and Surveys: Verify all lines, levels, and dimensions as shown on the Drawings, and report any errors or inconsistencies discovered in the above to the Architect before commencing work.

C. Field Measurements: The General Contractor shall take measurements in the field to verify or supplement dimensions indicated on Drawings and shall be responsible for accurate fit of specified work. Any discrepancy between the Drawings and the actual conditions shall be reported immediately to the Architect.

1.13 PROTECTION

A. The General Contractor shall take all responsibility for the work, and take all precautions for preventing injuries to persons and property on or about the work; shall bear all losses resulting to him on account of the amount or character of the work, or because the nature of the ground on which the work is done is different from what was estimated or expected, or on account of the weather, floods, elements or other cause; and he shall assume the defense of, and indemnify and save harmless, the Owner and its individual officers and agents, from all claims relating to labor and materials furnished for the work, to inventions, patents and patent rights used in doing the work, to injuries to any person or corporation received or sustained by or from the Contractor and his employees in doing the work, or in consequence of any improper materials, methods and implements or labor used therein; and to any act, omission or neglect of the Contractor and his employees therein.

B. It shall be the responsibility of the General Contractor to see that all personnel comply with Chapter IC-3, Specific Safety Requirements of the Industrial Commission of Ohio Relating to Construction, and the latest Federal Regulations of the Department of Labor, Bureau of Labor Standards, and the Occupational Safety and Health Act (OSHA).

C. The General Contractor shall provide and maintain guard lights for all work at all barricades, railings, obstructions in the streets, roads, or sidewalks, and at all trenches or pits. Remove such work when directed after necessity for same ceases.

1. The General Contractor is responsible for all required OSHA temporary protection and barricades necessary for the completion of his work.

2. Any temporary fencing and sidewalk barricades required will be provided by the General Contractor.

D. Temporary removal and reinstallation required for access is the responsibility of each Contractor requiring such access.

E. The General Contractor will be held responsible for all of his work and materials provided for by the Plans and Specifications until the work is completed and accepted. All Contractors shall:

1. Provide temporary protection for installed products. Control traffic in immediate area to minimize damage.

2. Prohibit traffic and storage on waterproofed and roofed surfaces and on lawn and landscaped areas.

3. Remove temporary materials, equipment, services, and construction prior to Substantial Completion inspection.

4. Clean and repair damage caused by installation or use of temporary facilities.

5. The General Contractor shall take necessary precautions to protect the finished work of all trades and shall be responsible for any negligence on his part.

F. Weather Protection:

1. All Contractors shall at all times provide protection against weather -- rain, wind, storms, frost, or heat -- so as to maintain his work, materials, apparatus, and fixtures free from injury or damage. <u>At the end of the day's work, all work likely to be damaged shall be covered</u>.

2. During cold weather, all contractors shall protect the work from damage. If low temperatures make it impossible to continue operations safely in spite of cold weather precautions, the Contractor shall cease work.

3. Any work damaged by failure to provide above protection shall be removed and replaced with new work at the responsible contractor's expense.

G. Dust Control and Partitions:

1. The General Contractor is responsible to completely control dust during the performance of his work, including any and all necessary measures such as dust enclosures, proper ventilation, etc. This also includes dust control during operations on the part of the Contractor in which services are provided by others. This cost is the responsibility of the General Contractor.

H. Noise and Odor Control:

1. Contractor shall minimize noise and odor as required. Contractor shall notify the Property 24 hours in advance of any construction activities that will create excessive noise or odors for the purpose of rescheduling Work or providing notifications.

1.14 FIRE REGULATIONS AND EXTINGUISHERS

A. Free access shall be maintained at all times from the street to fire hydrants and to outside connections for standpipes. Fire doors shall be installed and in operation at the earliest possible time.

B. The General Contractor is responsible for fire extinguishers and fire protection for all work, equipment, offices, sheds, etc., as required by OSHA regulations.

C. Each contractor shall appoint one of his personnel who is continually employed on the job site (such as the Superintendent) whose additional duty it will be to act as fire warden for the project. The fire warden shall institute and vigorously enforce a program of fire safety for the project.

D. Where existing exits occur, they shall be fully maintained at all times and shall be kept free from materials, equipment, or other obstructions.

E. Each contractor shall maintain fire protection equipment, institute fire prevention measures, and direct the prompt removal of all unnecessary combustible material and waste. Each Contractor shall be responsible for the correct and safe use of soldering coppers, extension lights, flammable liquids, welding and metal cutting apparatus, wax pots, or other open flame tools. This type of work shall be done only when properly supervised and with adequate fire extinguishing equipment available.

F. Combustible materials shall not be stored in the building.

G. The use of wood scaffolding will not be allowed. No part of the building where scaffolding is in place shall be used for the storage of flammable materials of any kind. Temporary structures of combustible material shall be located not less than 30 feet from the building.

H. No smoking or use of tobacco in any form shall be permitted within the building or adjacent areas.

I. Paints, varnishes, volatile oils, etc., shall be stored in metal lockers or metal boxes with self-closing covers. Gasoline and other volatile and flammable liquids shall be stored in metal barrels well away from other structures or other combustible materials.

J. Special precautions shall be taken to reduce fire hazards where electric or gas welding or cutting work is done and suitable fire extinguishing equipment shall be maintained near such operations.

1.15 RESTORATION

A. Where existing properties, streets, paving, curbs, etc., are removed or damaged as a result of work operations, the responsible Contractor shall restore the foregoing items to match the original or as required by local authorities.

1.16 WATER CONTROL

A. All Contractors shall provide, operate, and maintain pumps or other equipment necessary to drain his work. Keep excavation pits, trenches, and ditches including the entire subgrade free of any water under any circumstances that may arise.

1.17 REMOVAL

A. Remove temporary materials, equipment, services, and construction prior to Substantial Completion inspection.

B. Clean and repair damage caused by installation or use of temporary facilities.

1.18 HAZARDOUS MATERIALS

A. The Contractor shall comply with all laws concerning hazardous materials. Hazardous material shall be disposed in a legal manner. MSDS sheets for hazardous materials shall be filed at the Contractor's job site office and as otherwise required by law.

1.19 WAIVERS OF LIEN

A. During the course of construction, partial Waivers of Lien may be required prior to payment. The Affidavits and Waivers of Lien shall be submitted with each Application for Payment and shall consist of affidavits from the General Contractor, each subcontractor, each sub-subcontractor, and each material supplier.

B. By submitting an Application for Payment, the General Contractor attests to the accuracy of the amounts requested, represents that the work has been satisfactorily executed in compliance with the Contract Documents and that it is entitled to the amounts shown. By submitting the second or any subsequent Application for Payment, the Contractor attests that it has paid all just claims for labor, materials, equipment, subcontracts or other expenses represented by all previous Applications for Payment for which payment has been received from the Owner.

C. Furnishing of Affidavits and Waivers of Lien, in forms as approved and when required by the Owner, shall be a prerequisite to the issuance of all Certificates for Payment.

D. Prior to making final payment to the General Contractor, final Waivers of Lien shall be submitted from each material and equipment supplier, each subcontractor, and each sub-subcontractor employed by the Contractor, as well as from the General Contractor.

PART 2 PRODUCTS: NOT USED

PART 3 EXECUTION: NOT USED

END OF SECTION 01 35 00

SECTION 01 35 16

ALTERATION PROJECT PROCEDURES

PART 1 GENERAL

1.01 SUMMARY

A. Section Includes:

1. Procedural Requirements
2. Rehabilitation and Renovations of Existing Materials
3. Installation of Products Removed in Section 02 42 19

B. Related Sections

1. Section 01 31 00 - Project Management and Coordination
2. Section 01 35 00 - Special Project Procedures
3. Section 01 50 00 - Construction Facilities and Controls
4. Section 01 73 29 - Cutting and Patching
5. Section 02 41 19 - Selective Structure Demolition

PART 2 PRODUCTS

2.01 PRODUCTS FOR PATCHING AND EXTENDING WORK

A. New Materials: As specified in individual Sections.

B. Match existing products and work for patching and extending work.

C. Determine type and quality of existing products by inspection and any necessary testing, and workmanship by use of existing as a standard. Presence of a product, finish, or type of work, requires that patching, extending, or matching shall be performed as necessary to make the work complete and consistent with Specifications.

PART 3 EXECUTION

3.01 INSPECTION

A. Verify that demolition is complete and areas are ready for installation of new work.

B. Beginning of restoration work means acceptance of existing conditions.

3.02 PREPARATION

A. Cut, move, or remove items as necessary for access to alterations and renovations work; replace and restore at completion.

B. Remove unsuitable material not marked for salvage, such as rotted wood, rusted metals, and deteriorated masonry and concrete; replace materials as specified for finished work.

C. Remove debris and abandoned items from area and from concealed spaces.

D. Prepare surfaces and remove surface finishes to provide for proper installation of new work and new finishes.

E. Clean substrate surfaces prior to applying next material or substance.

F. Seal cracks or openings of substrate prior to applying next material or substance.

G. Apply any manufacturer's required or recommended substrate primer, sealer, or conditioner prior to applying any new material or substance in contact or bond.

3.03 INSTALLATION

A. Coordinate work of alterations and renovations to expedite completion.

B. Remove, cut, and patch work in a manner to minimize damage and to provide means of restoring products and finishes to specified condition.

C. Refinish visible existing surfaces to remain to specified condition for each material with a neat transition to adjacent new finishes.

D. Install products as specified in individual Sections.

3.04 TRANSITIONS

A. Where new work abuts or aligns with existing, make a smooth and even transition. Patched work shall match existing adjacent work in texture and appearance.

B. When finished surfaces are cut so that a smooth transition with new work is not possible, terminate existing surface along a straight line at a natural line of division as approved by Architect.

3.05 ADJUSTMENTS

A. Where removal results in adjacent surfaces forming a change of plane of ¼ inch or more occurs, submit recommendation for providing a smooth transition for Architect review.

3.06 REPAIR OF DAMAGED SURFACES

A. Patch or replace portions of existing surfaces to remain which are damaged, lifted, discolored, or showing other imperfections where noted on Drawings.

B. Repair substrate prior to patching finish.

3.07 FINISHES

A. Finish surfaces as specified in individual Sections.

B. Finish patches to produce uniform finish and texture over entire area. When finish cannot be matched, refinish entire surface to nearest intersections.

END OF SECTION 01 35 16

SECTION 01 42 19
REFERENCE STANDARDS

PART 1 GENERAL

1.01 SUMMARY

A. Section Includes:

1. Reference Standards

1.02 QUALITY ASSURANCE

A. Conflicting Requirements: Where compliance with two or more standards is specified and the standards establish different or conflicting requirements for minimum quantities or quality levels, comply with the most stringent requirement. Refer uncertainties and requirements that are different, but apparently equal, to the Architect for a decision before proceeding.

1. Minimum Quantity or Quality Levels: The quantity or quality level shown or specified shall be the minimum provided or performed. The actual installation may comply exactly with the minimum quantity or quality specified, or it may exceed the minimum with reasonable limits. To comply with these requirements, indicated numeric values are minimum or maximum, as appropriate, for the context of the requirements. Refer uncertainties to the Architect for a decision before proceeding.

1.03 INDUSTRY STANDARDS

A. Reference Standards

1. Conform with the provisions or standards referenced in the sections of the Specifications with the same force and effect as if the Standards referenced were bound or copied directly into the section, except that:

a. Conform with more stringent provisions when contained elsewhere in the Contract Documents; and

b. Conform with the more stringent provision when two or more Standards are referenced; and

c. Conform with the more stringent provision when the Standard referenced and the governing regulations differ unless the governing regulation require conformance to the less stringent provision without exception.

2. Submit for clarification and conform to the decision of the Architect when the Standard referenced:

a. Presents options which have not specifically been selected in the Contract Documents; or

b. Contain provisions which conflict with other provisions in the Contract Documents; or

c. It is uncertain or not clear which of differing provisions is the more stringent.

3. Conform to the provisions of the most recent issue of the Standard referenced as of the date of the Contract Documents.

B. Abbreviations and Acronyms of Organizations

1. Abbreviations and Names: Trade association names and titles of general standards are frequently abbreviated. Where abbreviations and acronyms are used in the Specifications or other Contract Documents, they mean the recognized name of the trade association, standards-producing organization, authorities having jurisdiction, or other entity applicable to the context of the text provision. Refer to Gale Research's "Encyclopedia of Associations" or Columbia Books' "National Trade and Professional Associations of the U.S.," which are available in most libraries.

2. The names, addresses, and telephone numbers given in the List of Organizations are subject to change and are believed to be, but are not assured to be, accurate and up to date as of the issue date of this Section.

3. List of Organizations: Certain Standards issued by the following organizations may be referenced in the Specifications. Copies may be obtained from the issuing organization.

AA	The Aluminum Association, Inc. 1525 Wilson Blvd, Suite 600 Rossyln, Arlington, VA 22209	(703) 358-2967 www.aluminum.org
AABC	Associated Air Balance Council 1518 K St., NW Washington, DC 20005	(202) 737-0202 www.aabchq.com
AAMA	American Architectural Manufacturer's Association 1827 Walden Office Sq., Suite 550 Schaumburg, IL 60173	(847) 303-5664 www.aamanet.org
AASHTO	American Association of State Highway and Transportation Officials 444 Capitol St., Suite 249 Washington, DC 20001	(202) 624-5800 www.transportation.org
AATCC	American Association of Textile Chemists and Colorists P O Box 12215 Research Triangle Park, NC 27709	(919) 549-8141 AATCC
ACI	American Concrete Institute 38800 Country Club Drive Fumington Hills, MI 48331	(248) 848-3700 www.aci-int.org
ACMA	American Composites Manufacturers Association 1010 North Glebe Rd, Suite 450 Arlington, VA 22201	(703) 525-0511 ACMA
ACPA	American Concrete Pipe Association 1303 West Walnut Hill Lane, Suite 305 Irving, TX 75038-3008	(972) 506-7216 www.concrete-pipe.org
ADC	Air Diffusion Council 1901 N. Roselle Road, Suite 800 Schaumburg, IL 60195	(847) 706-6750 www.flexibleduct.org/
AFPA	American Forest & Paper Association 1111 Nineteenth Street, NW, Suite 800 Washington, DC 20036	(800) 878-8878 AFPA
AF&PA	American Wood Council 1111 Nineteenth Street, NW, Suite 800 Washington, DC 20036	(202) 463-2766 AF&PA

AGA	American Gas Association 400 North Capitol St. NW, Suite 450 Washington, DC 20001	(202) 824-7000 www.aga.org
AGC	Associated General Contractors of America 2300 Wilson Blvd., Suite 400 Arlington, VA 22201	(703) 548-3118 AGC
AHA	American Hardboard Association 1210 W. Northwest Hwy Palatine, IL 60067-1897	(847) 934-8803 domensino.com/AHA
AHAM	Association of Home Appliance Manufacturers 1111 19th Street NW, Suite 402 Washington, DC 20036	(202) 872-5955 www.aham.org
AI	Asphalt Institute 2696 Research Park Dr. Lexington, KY 40511	(859) 288-4960 www.asphaltinstitute.org
AIA	The American Institute of Architects 1735 New York Ave., NW Washington, DC 20006-5292	(202) 626-7492 www.aia.org
AIA	American Insurance Association 2101 L Street NW, Suite 400 Washington, DC 20037	(202) 828-7100 www.aiadc.org
AIMCAL	Association of Industrial Metallizers, Coaters and Laminators 201 Springs Street Fort Mill, SC 29715	(803) 802-7820 AIMCAL
AISC	American Institute of Steel Construction One East Wacker Dr., Suite 700 Chicago, IL 60601-1802	(312) 670-2400 www.aisc.org
AISI	American Iron and Steel Institute 1140 Connecticut Avenue NW #705 Washington, DC 20036	(202) 452-7100 www.steel.org
ALI	Associated Laboratories, Inc. P.O. Box 152837 1323 Wall St. Dallas, TX 75215	(214) 565-0593
ALSO	American Lumber Standards Committee 19715 Waters Road Germantown, MD 20874	(301) 972-1700
AMCA	Air Movement and Control Association International, Inc. 30 W. University Dr. Arlington Heights, IL 60004-1893	(847) 394-0150 www.amca.org
ANSI	American National Standards Institute 25 West 43rd Street, 4th Floor New York, NY 10036	(212) 642-4900 www.ansi.org/
APA	APA-The Engineered Wood Association (Formerly: American Plywood Association) 7011 S. 19th Street Tacoma, WA 98466-5333	(253) 565-6600 www.apawood.org
APA	Architectural Precast Association	(239) 454-6989

	6710 Winkler Road Fort Myers, FL 33919	www.archprecast.org
AQMD	South Coast Air Quality Management District 21865 Copley Dr Diamond Bar, CA 91765	(909) 396-2000 AQMD
ARI	Air-Conditioning, Heating and Refrigeration Institute 2111 Wilson Blvd., Suite 500 Arlington, VA 22201	(703) 524-8800 www.ari.org
ASA	Acoustical Society of America 2 Huntington Quadrangle Melville, NYU 11747-4502	(516) 576-2360 asa.aip.org
ASC	Adhesive and Sealant Council 7101 Wisconsin Ave., Suite 990 Bethesda, MD 20814	(202) 452-1500 www.ascouncil.org
ASCE	American Society of Civil Engineers World Headquarters 1801 Alexander Bell Dr. Reston, VA 20191-4400	(800) 548-2723 (703) 295-6000 www.asce.org
ASHRAE	American Society of Heating, Refrigerating and Air-Conditioning Engineers 1791 Tullie Circle, NE Atlanta, GA 30329-2305	(800) 527-4723 (404) 636-8400 www.ashrae.org
ASLA	American Society of Landscape Architects 636 Eye Street NW Washington, DC 20001-3736	(202) 898-2444 www.asla.org
ASME	American Society of Mechanical Engineers Three Park Avenue New York, NY 10016-5990	(800) 434-2763 www.asme.org
ASPA	Turfgrass Producers International Formerly: American Sod Producers Association 2 East Main Street East Dundee, IL 60118	(847) 649-5555 ASPA
ASPE	American Society of Plumbing Engineers 8614 Catalpa Avenue, Suite 1007 Chicago, IL 60656-1116	(773) 693-2773 aspe.org
ASSE	American Society of Sanitary Engineering 901 Cantebury Road, Suite A Westlake, OH 44145	(440) 835-3040 www.asse-plumbing.org
ASTM	American Society for Testing and Materials 100 Barr Harbor Dr., PO Box C700 West Conshohocken, PA 19428-2959	(610) 832-9500 www.astm.org
AWCI	Association of the Wall and Ceiling Industry 513 West Broad Street, Suite 210 Falls Church, VA 22046	(703) 538-1600 AWCI
AWI	Architectural Woodwork Institute 46179 Westlake Drive, Suite 120 Potomac Falls, VA 20165	(571) 323-3636 www.awinet.org
AWPA	American Wood Protection Association	(205) 733-4077

	100 Chase Park South, Suite 116 Birmingham, AL 35244-1851	www.awpa.com
AWS	American Welding Society 550 NW Leleune Rd. Miami, FL 33126	(800) 443-9353 (305) 443-9353 www.aws.org/
AWWA	American Water Works Association 6666 W. Quincy Ave. Denver, CO 80235	(800) 926-7337 (303) 794-7711 www.awwa.org
BHMA	Builders Hardware Manufacturers Association 355 Lexington Ave., 15th Floor New York, NY 10017	(212) 297-2122 www.buildershardware.com
BIA	Brick Institute of America 1850 Centennial Park Dr., #301 Reston, VA 20191	(703) 620-0010 www.bia.org
CAGI	Compressed Air and Gas Institute 1300 Sumner Ave. Cleveland, OH 44115-2851	(216) 241-7333 www.cagi.org
CDA	Copper Development Association 260 Madison Avenue, 16th Floor New York, NY 10016	(212) 251-7200 CDA
CFFA	Chemical Fabrics and Film Association 1300 Sumner Avenue Cleveland, Ohio 44115-2851	(216) 241-7333 CFFA
CGA	Compressed Gas Association 4221 Walney Road, 5th Floor Chantilly, VA 20151	(703) 788-2700 www.cganet.com
CISCA	Ceilings & Interior Systems Construction Association 405 Illinois Avenue, Unit 2B St. Charles, IL 60174	(630) 584-1919 CISCA
CISPI	Cast Iron Soil Pipe Institute 5959 Shallowford Rd., Suite 419 Chattanooga, TN 37421	(423) 892-0137 www.cispi.org
CFLMI	Chain Link Fence Manufacturers Institute 10015 Old Columbia Road, Suite B-215 Columbia, MD 21046	(301) 596-2583 CLFMI
CPA/CWC	Composite Panel Association/Composite Wood Council 10465 Deerfield Avenue, Suite 306 Leesburg, VA 20176	(703) 724-1128 CPA/CWC
CPPA	Corrugated Polyethylene Pipe Association 432 N. Superior St. Toledo, OH 43604	(800) 510-2772 (419) 241-2221
CPSC	U.S. Consumer Product Safety Commission 4330 East West Highway Bethesda, MD 20814	(301) 504-7923 CPSC
CRI	Carpet and Rug Institute 730 College Drive Dalton, GA 30720	(706) 278-3176 www.carpet-rug.com

CRSI	Concrete Reinforcing Steel Institute 933 N. Plum Grove Rd. Schaumburg, IL 60173-4758	(847) 517-1200 (800) 328-6306 www.crsi.org
CSA	Canadian Standards Association 5060 Spectrum Way Mississauga, Ontario L4W 5N6 Canada	(416) 747-4000 CSA
CSI	Cast Stone Institute 813 Chestnut Street, PO Box 68 Lebanon, PA 17042	(717) 272-3744 CSI
CSSB	Cedar Shake & Shingle Bureau #2 – 7101 Horne Street Mission, BC V2V 7A2 Canada	(604) 820-7700 CSSB
CTIOA	Ceramic Tile Institute of America 12061 West Jefferson Blvd. Culver City, CA 90230-6219	(310) 574-7800 www.ctioa.org
DHI	Door and Hardware Institute (Formerly: National Builders Hardware Association) 14150 Newbrook Dr. Chantilly, VA20151	(703) 222-2010 www.dhi.org
DIPRA	Ductile Iron Pipe Research Association 245 Riverchase Pkwy East, Suite O Birmingham, AL 35244	(205) 402-8700 www.dipra.org
EIA/TIA	EIA/TIA Standards and Technology 2500 Wilson Blvd. Arlington, VA 22201	(703) 907-8024 www.eia.org
EIMA	EIFS Industry Members Association 3000 Corporate center Drive, #270 Morrow, GA 30260	(800) 294-3462 www.eima.com
EJMA	Expansion Joint Manufacturers Association 25 N. Broadway Tarrytown, NY 10591	(914) 332-0040 www.ejma.org
FCI	Fluid Controls Institute 1300 Sumner Ave. Cleveland, OH 441 15-2851	(216) 241-7333 FCI
FCICA	The Flooring Contractors Association 7439 Millwood Drive West Bloomfield, MI 48322	(248) 661-5015 www.fcica.com
FM	Factory Mutual Research Corporation 1151 Boston-Providence Turnpike P.O. Box 9102 Norwood, MA 02062-9102	(781) 762-4300 www.fmglobal.com
FMG	FM Global Factory Mutual Insurance Company 1301 Atwood Avenue P O Box 7500 Johnston, RI 02919	(401) 275-3000 FMG
FTC	Federal Trade Commission 600 Pennsylvania Ave., NW	(202) 326-2222 FTC

	Washington, DC 20580	
FSC	Forest Stewardship Council International Charles de Gaulle Str. 5 53113 Bonn Germany	49 (0) 228 367 66 0 FSC
GA	Gypsum Association 6525 Belcrest Road #480 Hyattsville, MD 20782	(301) 277-8686 www.gypsum.org
GANA	Glass Association of North America 2945 SW Wanamaker Drive, Suite A Topeka, KS 66614	(785) 271-0208 www.glasswebsite.com
GS	Green Seal, Inc. 1001 Connecticut Avenue, NW, Suite 827 Washington, DC 20036-5525	(202) 872-6400 GS
HI	Hydraulic Institute 6 Campus Drive, First Floor North Pusippuny, NJ 07054	(973) 267-9700 www.pumps.org
AHRI	Hydronics Institute (merged with AHRI 2008) (Division of Gas Appliance Manufacturers Association) 2111 Wilson Blvd., Suite 500 Arlington, VA 22201	(908) 464-8200 Hydronics Institute
HMA	Hardwood Manufacturers Association (Formerly: Southern Hardwood Lumber) Manufacturers Association) 400 Penn Center Blvd., Suite 530 Pittsburgh, PA 15235-5605	(800) 373-WOOD (9663) www.hardwood.org
HPVA	Hardwood Plywood and Veneer Association 1825 Michael Farraday Dr. Reston, VA 20190	(703) 435-2900 www.hpva.org
ICC	International Code Council 500 New Jersey Avenue, NW, 6th Floor Washington, DC 20001-2070	(888) 422-7233 ICC
ICC-ES	International Council Evaluation Service Inc. 5360 Workman Mill Road Whittier, CA 90601	(562) 699-0543 ICC-ES
ICEA	Insulated Cable Engineers Association, Inc. P.O. Box 1569 Carrollton, GA 30117	(770) 830-0369 www.icea.net
ICRI	International Concrete Repair Institute 3166 S. River Road, Suite 132 Des Plaines, IL 60018	(847) 827-0830 ICRI
IEEE	Institute of Electrical and Electronics Engineers 3 Park Avenue, 17th Floor New York, NY 10016	(800) 678-4333 (212) 419-7900 www.ieee.org
IESNA	Illuminating Engineering Society of North America 120 Wall St., 17th Floor New York, NY 10005-4001	(212) 248-5000 www.iesna.org
IGCC	Insulating Glass Certification Council, Inc.	(315) 646-2234

	P O Box 730 Sackets Harbor, NY 13685	IGCC
IGMA	Insulating Glass Manufacturers Alliance 27 N. Wacker Drive, Suite 365 Chicago, IL 60606-2800	(613) 233-1510 IGMA
IIDA	International Interior Design Association 222 Merchandise Mart, Suite 567 Chicago, IL 60654	(888) 799-4432 www.iida.com
ILI	Indiana Limestone Institute of America	ILI
INCE	Institute of Noise Control Engineering of the USA 9100 Purdue Road, Suite 200 Indianapolis, IN 46268	(317) 735-4063 www.inceusa.org
ISA	ISA - International Society for Measurement and Control 67 Alexander Dr. Research Triangle Park, NC 27709	(919) 549-8411 www.isa.org
ISO	International Organization for Standardization 1 ch. De la Voie-Creuse Case Postale 56 CH-1211 Geneva 20, Switzerland	+41 22 749 01 11 ISO
ISSFA	International Solid Surface Fabricators Association 910 W. State Street, Unit 1 Lehi, UT 84043	(877) 464-7732 ISFA
ITS	Intelligent Transportation Systems Research and Innovative Technology Administration (RITA) 1200 New Jersey Avenue, S.E Washington, DC 20590	(800) 853-1351 ITS
IWFA	International Window Film Association	(276) 666-4932 IWFA
AIST	Association for Iron & Steel Technology (Formerly: Iron and Steel Society) 186 Thorn Hill Road Warrendale, PA 15086-7512	(724) 814-3000 www.iss.org
KCMA	Kitchen Cabinet Manufacturers Association (Formerly: National Kitchen Cabinet Association) 1899 Preston White Dr. Reston, VA 22091-4326	(703) 264-1690 www.kcma.org
LGSI	Light Gage Structural Institute c/o Loseke Technologies, Inc. P.O. Box 560746 The Colony, TX 75056	(972) 625-4560 www.loseke.com/lgsi.html
LMA	Laminating Materials Association (Formerly: American Laminators Association) 116 Lawrence St. Hillsdale, NJ 07642-2730	
LPI	The Lightning Protection Institute P.O. Box 99 Maryville, MO 64468	(800) 488-6864 LPI

MBMA	Metal Building Manufacturer's Association 1300 Sumner Ave. Cleveland, OH 441158-2851	(216) 241-7333 www.mbma.com
MCAA	Mechanical Contractors Association of America 1385 Piccud Dr. Rockville, MD 20850	(301) 869-5800 www.mcaa.org
MFMA	Metal Framing Manufacturers Association 401 N. Michigan Ave. Chicago, IL 60611	(312) 644-6610 www.metalframingmfg.org
MIA	Marble Institute of America 28901 Clemens Road, Suite 100 Cleveland, OH 44145	(440) 250-9222 www.marble-institute.com
MIA	Masonry Institute of America 22815 Frampton Avenue Torrence, CA 90501	(800) 221-4000 www.masonryinstitute.org
MIHA	Material Handling Industry of America 8720 Red Oak Blvd, Suite 201 Charlotte, NC 28217-3992	(704) 676-1190 MIHA
ML/SFA	Metal Lath/Steel Framing Association (A Division of the NAAMM) 8 South Michigan Ave., Suite 1000 Chicago, IL 60603	(312) 456-5590
MPI	Master Painters Institute	(604) 298-7578 MPI
MSS	Manufacturers Standardization Society of the Valve and Fittings Industry 127 Park St., NE Vienna, VA 22180	(703) 281-6613 mss-hq.org
NAA	National Arborist Association P.O. Box 1094 Amherst, NH 03031-1094	(800) 733-2622 (603) 673-3311
NAAMM	National Association of Architectural Metal Manufacturers 800 Roosevelt Drive, Bldg C, Suite 312 Glen Ellyn, IL 60137	(630) 942-6591 www.naamm.org
NAIMA	North American Insulation Manufacturers Association (Formerly: Thermal Insulation Manufacturers Association) 44 Canal Center Plaza, Suite 310 Alexandria, VA 22314	(703) 684-0084 www.naima.org
NAPA	National Asphalt Pavement Association NAPA Building 5100 Forbes Blvd. Lanham, MD 20706-4413	(888) 468-6499 www.hotmix.org
NBFAA	Electronic Life Safety, Security & Systems Professionals (Formerly: National Burglar & Fire Alarm Association) 2300 Valley View Lane Suite 230 Irving, TX 75062	(888) 447-1689 NBFAA
NBGQA	National Building Granite Quarries Association Inc. 1220 L. Street, N.W., Suite 100-167 Washington, DC 20005	(800) 557-2848 NBGQA

NCAA	National Collegiate Athletic Association 700 W. Washington Street Indianapolis, IN 46206	(317) 917-6222 NCAA
NCMA	National Concrete Masonry Association 13750 Sunrise Valley Drive Herndon, VA 20171	(703) 713-1900 www.ncma.org
NCRMA	National Ready Mixed Concrete Association 900 Spring Street Silver Spring, MD 20910	(888) 846-7622 NRMCA
NCSPA	National Corrugated Steel Pipe Association 14070 Proton Road, Suite 100 LB9 Dallas, TX 75244	(972) 850-1907 www.ncspa.org
NEBB	National Environmental Balancing Bureau 8575 Grovemont Circle Gaithersburg, MD 20877-4121	(301) 977-3698 www.nebb.org
NECA	National Electrical Contractors Association 3 Bethesda Metro Center, Suite 1100 Bethesda, MD 20814-5372	(301) 657-3110 www.necanet.org
NEII	National Elevator Industry, Inc. P.O. Box 838 Salem, NY 12865-0838	(518) 854-3100 www.neii.org
NELMA	Northeastern Lumber Manufacturers Association 272 Tuttle Rd. P.O. Box 87A Cumberland Center, ME 04021	(207) 829-6901 www.nelma.org
NEMA	The Association of and Medical Imaging Equipment Manufacturers 1300 N 17th St., Suite 1752 Rosslyn, VA 22209	(703) 841-3200 www.nema.org
NEPA	The National Environmental Policy Act U.S. Environmental Protection Agency 1200 Pennsylvania Ave., NW Washington, D.C. 20460-0001	(202) 564-7157 NEPA
NFPA	National Fire Protection Association One Batterymarch Park P.O. Box 9101 Quincy, MA 02269-9101	(800) 344-3555 (617) 770 3000 http://www.nfpa.org
NFRC	National Fenestration Rating Council 6305 Ivy Lane, Suite 140 Greenbelt, MD 20770	(301) 589-1776 NFRC
NFSHSA	National Federation of State High School Association PO Box 690 Indianapolis, IN 46206	(317) 972-6900 NFSHSA
NFS	NSF International PO Box 130140 789 N. Dixboro Road Ann Arbor, MI 48113	(800) 673-6275 NSF
NFSI	National Floor Safety Institute	(817) 749-1700

	P.O. Box 92607 Southlake, TX 76092	NFSI
NHLA	National Hardwood Lumber Association P.O. Box 34518 Memphis, TN 38184-0518	(901) 377-1818 NHLA
NGA	National Glass Association 8200 Greensboro Drive, Suite 302 McLean, VA 22102-3881	(866) 342-5642 NGA
NLGA	National Lumber Grades Authority #302-960 Quayside Dr. New Westminster, BC V3M 6G2	(604) 524-2393 www.nlga.org
NPA	Composite Panel Association (Formerly: National Particleboard Association) 19465 Deerfield Avenue, Suite 306 Leesburg, VA 20176	(703) 724-1128 www.pbmdf.com
NPCA	National Paint and Coatings Association 1500 Rhode Island Ave., NW Washington, DC 20005-5597	(202) 462-6272 www.paint.org
NRCA	National Roofing Contractors Association O'Hare International Center 10255 W. Higgins Rd., Suite 600 Rosemont, IL 60018-5607	(847) 299-9070 www.nrca.net
NRMCA	National Ready Mixed Concrete Association 900 Spring St. Silver Spring, MD 20910	(301) 587-1400 www.nrmca.org
NSF	NSF International (Formerly: National Sanitation Foundation) P.O. Box 130140 Ann Arbor, MI 48113-0140	(734) 769-8010 www.nsf.org
NTMA	The National Terrazzo & Mosaic Association, Inc. 201 North Maple, Suite 208 Purcellville, VA 20132	(800) 323-9736 NTMA
NUSIG	National Uniform Seismic Installation Guidelines 12 Lahoma Ct. Alamo, CA 94526	(510) 946-0135
NWFA	National Wood Flooring Association 111 Chesterfield Industrial Boulevard Chesterfield, MO 63005	(800) 422-4556 NWFA
NWWDA	National Wood Window and Door Association (Formerly: National Woodwork Manuf. Association) 401 N. Michigan Avenue, Suite 2200 Chicago, IL 60611	(800) 223-2301 www.nwwda.org/
ODNR	Ohio Department of Natural Resources 2045 Morse Road, Building G Columbus, OH 43229-6693	(614) 265-6300 ODNR
PCA	Portland Cement Association 5420 Old Orchard Rd. Skokie, IL 60077-1083	(847) 966-6200 www.cement.org

PCI	Precast/Prestressed Concrete Institute 209 W. Jackson Blvd. #500 Chicago, IL 60606	(312) 786-0300 www.pci.org
PDCA	Painting and Decorating Contractors of America 1801 Park 270 Drive, Suite 220 St. Louis, MO 63146	(800) 332-7322 www.pdca.com
PDI	Plumbing and Drainage Institute 800 Turnpike St., Suite 300 North Andove, MA 01845	(800) 589-8956 www.pdionline.org
PEI	Porcelain Enamel Institute P.O. Box 90220 Norcross, GA 30010	(770) 676-9366 www.porcelainenamel.com
PPFA	Plastic Pipe and Fittings Association 800 Roosevelt Rd., Building C, Suite 312 Glen Ellyn, IL 60137-5833	(630) 858-6540 www.ppfahome.org
PPI	Plastic Pipe Institute (The Society of the Plastics Industry, Inc.) 105 Decker Court, Suite 825 Irving, TX 75062	(469) 499-1044 www.plasticpipe.org
RCSC	Research Council on Structural Connections	RCSC
RFCI	Resilient Floor Covering Institute 115 Broad Street, Suite 201 LaGrange, GA 30240	(706) 882-3833 www.rfci.com
RMA	Rubber Manufacturers Association 1400 K St., NW, Suite 900 Washington, DC 20005	(800) 220-7620 (202) 682-4800 www.rma.org
SAE	SAE International 400 Commonwealth Dr. Warrendale, PA 15096-0001 For publications: Call (412) 776-4970	(877) 606-7323 www.sae.org
SDI	Steel Door Institute 30200 Detroit Rd. Cleveland, OH 44145-1967	(440) 889-0010 www.steeldoor.org
SHLMA	Southern Hardwood Lumber Manufacturers Association (See HMA)	
SIGMA	Sealed Insulating Glass Manufacturers Association 401 N. Michigan Ave. Suite 2400 Chicago, IL 60611-4267	(312) 644-6610
SGCC	Safety Glazing Certification Council PO Box 730 Sackets Harbor, NY 13685	(315) 646-2234 SGCC
SJI	Steel Joist institute 196 Stonebridge Drive, Unit 1 Myrtle Beach, SC 29588	(843) 293-1995 www.steeljoist.org
SMA	Screen Manufacturers Association	SMA
SMACNA	Sheet Metal and Air Conditioning	(703) 803-2980

	Contractors' National Association, Inc. 4201 Lafayette Center Dr. P.O. Box 221230 Chantilly, VA 20151-1209	www.smacna.org
SMPTE	Society of Motion Picture and Television Engineers 3 Barker Ave., 5th Floor White Plains, NY 10601	(914) 761-1100 SMPTE
SPIB	Southern Pine Inspection Bureau P.O. Box 10915 Pensacola, FL 32524-0915	(850) 434-2611 www.spib.org
SPRI	Single Ply Roofing Industry 411 Waverly Oaks Road, 331B Waltham, MA 02452	(781) 647-7026 www.spri.org
SSPC	The Society for Protective Coatings 40 24th St., 6th Floor Pittsburgh, PA 15222-4643	(412) 281-2331 (877) 281-7772 www.sspc.org
SWRI	Sealant, Waterproofing and Restoration Institute 400 Admiral Blvd. Kansas City, MO 64106	(816) 472-7974 www.swrionline.org
TCIA	Tree Care Industry Association 136 Harvey Road, Suite 101 Londonderry, NH 03053	(800) 733-2622 TCIA
TCNA	Tile Council of North America, Inc. 100 Clemson Rescue Blvd. Anderson, SC 29625	(864) 646-8453 www.tileusa.com
TFS	Texas Forest Service John B. Connally Building, Suite 364 301 Tarrow Street College Station, TX 77840-7896	(979) 458-6606 Texas Forest Service (TFS)
TPI	Truss Plate Institute 218 N. Lee St, #312 Alexandria, VA 22314	(703) 683-1010 www.tpinst.org
TRI	Tile Roofing Institute 230 East Ohio St., Suite 400 Chicago, IL 60611	(312) 670-4177 Tile Roofing Institute (TRI)
UL	Underwriters Laboratories Inc. 2600 N.W. Lake Road Camas, WA 98607	(877) 854-3577 www.ul.com
USGBC	U.S. Green Building Council 2101 L Street, NW, Suite 500 Washington, DC 20037	(800) 795-1747 USGBC
VMMB	Volumetric Mixer Manufacturers Bureau 900 Spring Street Silver Spring, MD 20910	(301) 587-1400 VMMB
WA	Wallcoverings Association 401 N. Michigan Ave. Suite 2200 Chicago, IL 60611-4267	(312) 644-6610 www.wallcoverings.org
WCLIB	West Coast Lumber Inspection Bureau	(503) 639-0651

	P.O. Box 23145 Portland, OR 97281-3145	www.wclib.org
WCSC	Window Covering Safety Council 355 Lexington Avenue, Suite 1500 New York, NY 10017	(212) 297-2100 WCSC
WDMA	Window & Door Manufacturers Association 401 N. Michigan Avenue, Suite 220 Chicago, IL 60611	(800) 223-2301 WDMA
WHI	Warnock Hersey	WHI
WRCLA	Western Red Cedar Lumber Association 1501-700 West Pender Street Pender Place 1, Business Building Vancouver, B.C., Canada V6C 1G8	(604) 684-0266 WRCLA
WWPA	Western Wood Products Association 522 SW 5th Ave. Portland, OR 97204-2122	(503) 224-3930 www.wwpa.org

FEDERAL GOVERNMENT AGENCIES:

ADA	U.S. Department of Justice 950 Pennsylvania Avenue, NW Civil Rights Division Disability Rights Section – NYA Washington, D.C. 20530	(202) 307-0663 ADA
ADAAG	United States Access Board 1331 F Street, NW, Suite 1000 Washington, D.C. 20004-1111	(800) 872-2253 ADAAG
CFR	Code of Federal Regulations U.S. Government Printing Office Mail Stop: IDCC 732 N. Capitol Street, NW Washington, DC 20401	(866) 512-1800 CFR
CPSC	U.S. Consumer Product Safety Commission East West Towers 4330 East-West Hwy Bethesda, MD 20814	(301) 504-7906 www.cpsc.gov
DOC	U.S. Department of Commerce 1401 Constitution Ave., NW Washington, DC 20230	(202) 482-2000 www.commerce.gov
DOT	U.S. Department of Transportation 1200 New Jersey Avenue SE Washington, DC 20590	(202) 366-4000 www.dot.gov
EPA	U.S. Environmental Protection Agency Ariel Rios Building 1200 Pennsylvania Avenue, N.W. Washington, DC 20460	(202) 272-0167 EPA
FDA	U.S. Food and Drug Administration GMP Publications, Inc. P.O. Box 335 Medford, NJ 08055	(856) 810-7331 FDA

FHWA	Federal Highway Administration U.S. Department of Transportation 1200 New Jersey Ave., SE Washington, DC 20590	(202) 366-4000 FHWA
FS	General Services Administration Federal Supply Service FSS Product Acquisition Center Supply Standards Division (FLAS Arlington, VA 22202	(703) 605-2567 Federal Specifications (FS)
GSA	U.S. General Services Administration 1800 F Street NW Washington, DC 20405	(800) 488-3111 www.gsa.gov
HUD	U.S. Department of Housing and Urban Development 451 7th Street, S.W. Washington, DC 20410	(202) 708-1112 HUD
NIST	National Institute of Standards and Technology (U.S. Department of Commerce) 100 Bureau Dr., Stop 1070 Gaithersburg, MD 20899-1070	(301) 975-6487 www.nist.gov
NRMCA	National Ready Mix Concrete Association 900 Spring Street Silver Spring, MD 20910	(888) 846-7622 NRMCA
OSHA	Occupational Safety and Health Administration (U.S. Department of Labor) 200 Constitution Ave., NW Washington, DC 20210	(800) 321-6742 www.osha.gov
PS	Product Standard of NBS (U.S. Department of Commerce) Government Printing Office Washington, DC 20402	(202) 512-1800
USDA	U.S. Department of Agriculture 1400 Independence Ave., SW Washington, DC 20250	(202) 456-1111 www.usda.gov

PART 2 PRODUCTS
Not Used

PART 3 EXECUTION
Not Used

END OF SECTION 01 42 19

SECTION 01 45 00
QUALITY CONTROL

PART 1 GENERAL

1.01 SUMMARY

A. Section Includes:

1. References
2. Quality Assurance
   a. Testing Laboratory Qualifications
   b. Control of Installation
3. Tolerances
4. Inspection and Testing Laboratory Services
5. Manufacturers' Field Services and Reports

B. Related Sections:

1. Information Available to Bidders: Soil investigation data.
2. General Conditions: Inspections, testing, and approvals required by public authorities.
3. Section 01 33 00 - Submittals and Substitutions: Submission of manufacturers' instructions and certificates.
4. Section 01 77 00 – Closeout Procedures: Project Record Documents.
5. Individual Specification Sections: Inspections and tests required, and standards for testing.

1.02 REFERENCES

A. For Products or workmanship specified by association, trade, or other consensus standards, comply with requirements of the standard, except when more rigid requirements are specified or are required by applicable codes.

B. Conform to reference standard by date of issue current on date of Contract Documents, except where a specific date is established by code.

C. Obtain copies of standards where required by product specification sections.

D. The contractual relationship, duties, and responsibilities of the parties in Contract nor those of the Architect shall not be altered from the Contract Documents by mention or inference otherwise in any reference document.

E. ASTM International Publications:

1. C802 - "Practice for Conducting an Interlaboratory Test Program to Determine the Precision of Test Methods for Construction".
2. C1021 - "Practice for Laboratories Engaged in the Testing of Building Sealants".
3. C1077 - "Practice for Laboratories Testing Concrete and Concrete Aggregates for Use in Construction and Criteria for Laboratory Evaluation".
4. C1093 - "Practice for Accreditation of Testing Agencies for Unit Masonry".
5. D290 - "Recommended Practice for Bituminous Mixing Plant Inspection".
6. D3740 - "Practice for Evaluation of Agencies Engaged in Testing and/or Inspection of Soil and Rock as Used in Engineering Design and Construction".

7. D4561 - "Practice for Quality Control Systems for an Inspection and Testing Agency for Bituminous Paving Materials".

8. E329 - "Practice for Use in the Evaluation of Inspection and Testing Agencies as Used in Construction".

9. E543 - "Practice for Determining the Qualification of Nondestructive Testing Agencies".

10. E548 - "Practice for Preparation of Criteria for Use in the Evaluation of Testing Laboratories and Inspection Bodies".

11. E699 - "Practice for Criteria for Evaluation of Agencies Involved in Testing, Quality Assurance, and Evaluating Building Components in Accordance with Test Methods Promulgated by ASTM Committee E6".

1.03 SUBMITTALS

A. Before start of the Work, submit testing firm name, address, and telephone number and names of full time registered engineers, specialists, and responsible officer.

B. Submit copy of report of laboratory facilities inspection made by Materials Reference Laboratory of National Bureau of Standards during most recent inspection, with memorandum of remedies of any deficiencies reported by the inspection.

1.04 QUALITY ASSURANCE

A. Testing Laboratory Qualifications:

1. Comply with requirements of ASTM Publications C802, ASTM C1021, ASTM C1077, ASTM C1093, ASTM D290, ASTM D3740, ASTM D4561, ASTM E329, ASTM E543, ASTM E548, and ASTM E699.

2. Laboratory: Authorized to operate in State in which Project is located.

3. Laboratory Staff: Maintain a full time registered Engineer on staff to review services.

4. Testing Equipment: Calibrated at reasonable intervals with devices of an accuracy traceable to either National Bureau of Standards or accepted values of natural physical constants.

B. Control of Installation:

1. Monitor quality control over suppliers, manufacturers, Products, services, site conditions, and workmanship, to produce Work of specified quality.

2. Comply with manufacturers' instructions, including each step in sequence.

3. Should manufacturers' instructions conflict with Contract Documents, request clarification from Architect before proceeding.

4. Comply with specified standards as minimum quality for the Work except where more stringent tolerances, codes, or specified requirements indicate higher standards or more precise workmanship.

5. Perform work by persons qualified to produce workmanship of specified quality.

6. Secure products in place with positive anchorage devices designed and sized to withstand stresses, vibration, physical distortion, or disfigurement.

1.05 TOLERANCES

A. Monitor tolerance control of installed Products to produce acceptable Work. Do not permit tolerances to accumulate.

B. Comply with manufacturers' tolerances. Should manufacturers' tolerances conflict with Contract Documents, request clarification from the Architect before proceeding.

C. Adjust products to appropriate dimensions; position before securing Products in place.

1.06 INSPECTING AND TESTING LABORATORY SERVICES

A. Except as otherwise required in the Owner-Contractor Agreement, the Contractor shall appoint, employ, and pay for specified services of an independent firm to perform inspecting and testing, subject to approval of the Owner.

B. Employment of testing laboratory in no way relieves Contractor of obligation to perform Work in accordance with requirements of Contract Documents.

C. The testing firm will perform inspections, tests, and other services specified in individual Specification Sections and as required by the Architect and Owner.

D. Inspecting, testing, and source quality control may occur on or off the Project site.

E. Retesting required because of non-conformance to specified requirements shall be performed by the same testing firm on instructions by the Architect and Owner.

F. Laboratory Responsibilities:

1. Test samples of mixes submitted by Contractor.
2. Provide qualified personnel at site. Cooperate with Architect and Contractor in performance of services.
3. Perform specified inspecting, sampling, and testing of Products in accordance with specified standards.
4. Ascertain compliance of materials and mixes with requirements of Contract Documents.
5. Promptly notify Architect and Contractor of observed irregularities or non-conformance of Work or Products.
6. Perform additional inspection and tests required by the Architect.
7. Attend preconstruction meetings and progress meetings.

G. Laboratory Reports: After each inspection and test, promptly submit copies of laboratory report to the Architect and Contractor. Include the following:

1. Date issued
2. Project title and number
3. Name of inspector
4. Date and time of sampling or inspection
5. Identification of product and specifications section
6. Location in the Project
7. Type of inspection or test
8. Date of test
9. Results of tests
10. Conformance with Contract Documents
11. When requested by Architect, provide interpretation of test results

H. Limits on Testing Laboratory Authority:

1. Laboratory may not release, revoke, alter, or enlarge on requirements of Contract Documents.
2. Laboratory may not approve or accept any portion of the Work.
3. Laboratory may not assume any duties of Contractor.
4. Laboratory has no authority to stop the Work.

I. Contractor Responsibilities:

1. Deliver to laboratory at designated location, adequate samples of materials proposed to be used which require testing, along with proposed mix designs.
2. Cooperate with testing firm and personnel, and provide access to the Work. Furnish samples of materials, design mix, equipment, tools, storage, and assistance by incidental labor as requested.
3. Provide incidental labor and facilities:
   a. To provide access to Work to be tested.
   b. To obtain and handle samples at the site or at source of Products to be tested.
   c. To facilitate tests and inspections.
   d. To provide storage and curing of test samples.
4. Notify Architect and testing firm 24 hours prior to expected time for operations requiring services.
5. Make arrangements with testing firm and pay for additional samples and tests required for Contractor's use.
6. Notify laboratory sufficiently in advance of cancellation of required testing operations. Contractor shall be responsible to laboratory for changes due to failure to notify if requirements for testing are canceled.

1.07 MANUFACTURERS' FIELD SERVICES AND REPORTS

A. When specified in individual specification sections, require material or Product suppliers or manufacturers to provide qualified staff personnel to observe site conditions, conditions of surfaces and installation, quality of workmanship, start-up of equipment, test, adjust and balance of equipment and erection as applicable, and to initiate instructions when necessary.

B. Report observations and site decisions or instructions given to applicators or installers that are supplemental or contrary to manufacturers' written instructions.

C. Submit report in duplicate within 15 calendar days of observation to Architect for information.

PART 2 PRODUCTS

Not Used

PART 3 EXECUTION

Not Used

END OF SECTION 01 45 00

SECTION 01 50 00
TEMPORARY FACILITIES AND CONTROLS

PART 1 GENERAL

1.01 SUMMARY

A. Section Includes:

1. This Section specifies temporary services and facilities, including utilities, construction and support facilities, security and protection. Provide facilities ready for use. Maintain, expand and modify as needed. Remove when no longer needed, or when replaced by permanent facilities.

2. Work of this Section shall include, but not necessarily be limited to, the following:

a. Project/Site Conditions

b. Use Charges

c. Field Office and Storage Sheds

d. Temporary Sanitary Facilities

e. Temporary Fire Extinguishers

f. Temporary Water

g. Temporary Electric Power Service and Interior Lighting

h. Temporary Telephone Service and Facsimile Service

i. Temporary Storm and Sanitary Sewer

j. Temporary Heating, Cooling, and Ventilation

k. Temporary Paving

l. Project Identification

m. Temporary Exterior Lighting

n. Progress Cleaning and Waste Removal

o. Surface and Underground Water Control

p. Protection of Installed Work

1) Environmental Protection

2) Dust Control

3) Barriers, Barricades, Warning Signs, and Lights

q. Removal of Construction Facilities and Temporary Controls

B. Related Sections:

1. Section 00 72 00 - General Conditions for additional requirements.

2. Section 01 11 00 - Summary of Work

3. Section 01 35 00 - Special Project Procedures

4. Section 01 74 00 - Cleaning and Waste Management

5. Section 01 77 00 - Contract Closeout

6. Section 02 41 13 - Selective Site Demolition

1.02 QUALITY ASSURANCE

A. Regulations: Each Contractor shall comply with industry standards and with applicable laws and regulations of authorities having jurisdiction, including but not limited to:

1. Owner's Requirements
2. Building and Development Code Requirements
3. Health and Safety Regulations
4. Utility Company Regulations
5. Police, Fire Department, and Rescue Squad Rules
6. Environmental Protection Regulations
7. City of Stow Requirements and Regulations
8. City of Cuyahoga Falls Requirements and Regulations
9. U.S. Army Corps of Engineers

B. Standards: Comply with NFPA Code 241, "Building Construction and Demolition Operations", ANSI-A10 Series standards for "Safety Requirements for Construction and Demolition", and NECA Electrical Design Library "Temporary Electrical Facilities."

1. Refer to "Guidelines for Bid Conditions for Temporary Job Utilities and Services", prepared jointly by AGC and ASC for industry recommendations.
2. Trade Jurisdictions: Assigned responsibilities for installation and operation of temporary utilities are not intended to interfere with the normal application of trade regulations and union jurisdictions.
3. Electrical Service: Comply with NEMA, NECA, and UL standards and regulations for temporary electric service. Install service in compliance with National Electric Code (NFPA 70).

C. Inspections: Arrange for authorities having jurisdiction to inspect and test each temporary utility before use. Obtain required certifications and permits.

1.03 GENERAL

A. Any Contractor requiring one of the temporary services before it can be provided as specified, or whose requirements with respect to a particular service differ from the service specified, shall provide such service as suits his needs, at his own expense, and in a manner satisfactory to the Architect and Owner.

1.04 PROJECT/SITE CONDITIONS

A. Temporary Utilities: Prepare a schedule indicating dates of the implementation and termination of each temporary utility. At the earliest feasible time, when acceptable to the Owner, change over from use of the temporary service to use of the permanent service.

1. Temporary Use of Permanent Facilities: The installer of each permanent service or facility shall assume responsibility for its operation, maintenance and protection during its use as a construction service or facility prior to the Owner's acceptance, regardless of previously assigned responsibilities.

B. Conditions of Use: Keep temporary services and facilities clean and neat in appearance. Operate in a safe and efficient manner. Take necessary fire prevention measures. Do not overload facilities, or permit them to interfere with progress. Do not allow hazardous, dangerous, or unsanitary conditions, or public nuisances to develop or persist on the site.

1.05 USE CHARGES

A. General: Cost or use charges for temporary facilities are not chargeable to the Owner or the Architect. Contractor's cost or use charges for temporary services or facilities will not be accepted as a basis of claim for an adjustment in the Contract Sum or Contract Time.

B. Water Service: Water is to be extended from the closet water distribution system to a location to be determined by the General Contractor and coordinated with the Owner.

1. The Owner shall pay for all metered water reasonably used for construction purposes by all Contractors during the entire construction period.

C. Electric Power Service: The Owner shall pay electric power use charges for electricity reasonably used by all entities engaged in construction activities at the Project site.

D. Sewer Service Use Charges: The Owner shall pay sewer service use charges, if required, for sewer usage by all parties engaged in construction at the Project site. This use does not cover any tap-in fees required due to new construction.

E. Heating Fuel Charges: The General Contractor shall furnish and pay for all fuel required for temporary heating and ventilation, other than electric power use.

F. Other entities using temporary services and facilities include, but are not limited to:

1. Other Nonprime Contractors
2. The Owner's Work Forces and Separate Contractors
3. Occupants of the Project
4. The Architect
5. The Owner's Representative
6. Testing Agencies
7. Personnel of Government Agencies

PART 2 PRODUCTS

2.01 MATERIALS

A. General: Provide new materials; if acceptable to the Architect, undamaged previously used materials in serviceable condition may be used. Provide materials suitable for the use intended.

B. Tarpaulins: Provide waterproof, fire-resistant, UL labeled tarpaulins with flame-spread rating of 15 or less. For temporary enclosures, provide translucent nylon reinforced laminated polyethylene or polyvinyl chloride fire-retardant tarpaulins.

C. Water: Provide potable water approved by local health authorities.

2.02 EQUIPMENT

A. Water Hoses: provide 3/4" heavy-duty, abrasion-resistant, flexible rubber hoses 100 ft. long, with pressure rating greater than the maximum pressure of the water distribution system; provide adjustable shut-off nozzles at hose discharge.

B. Electrical Outlets: Provide properly configured NEMA polarized outlets to prevent insertion of 110-120 volt plugs into higher voltage outlets. Provide receptacle outlets equipped with ground-fault circuit interrupters, reset button and pilot light, for connection of power tools and equipment.

C. Electrical Power Cords: Provide grounded extension cords; use "hard-service" cords where exposed to abrasion and traffic. Provide waterproof connectors to connect separate lengths of electric cords, if single lengths will not reach areas where construction activities are in progress.

D. Lamps and Light Fixtures: Provide general service incandescent lamps of wattage required for adequate illumination. Provide guard cages or tempered glass enclosures, where exposed to breakage. Provide exterior fixtures where exposed to moisture.

E. Heating Units: Provide temporary heating units that have been tested and labeled by UL, FM, or another recognized trade association related to the type of fuel being consumed.

F. Temporary Field Office:

1. The General Contractor shall provide and maintain clean, temporary weather-tight offices at the site, in location as approved by the Owner, for the use of the General Contractor, his Subcontractors' agents, Owner's Representative, and the Architect; and, at which location he or his authorized agent shall be present, or to which either may be readily called at all times. While the work is in progress, copies of permits, approved shop drawings, and a complete set of Contract Drawings and Specifications marked up to date with any revisions, shall be kept at said office ready for use at all times.

   a. Provide sturdy furniture, drawing rack, and drawing display table.

2. All expenses in connection with the field office, including the installation cost, and use of heat, light, water, and janitor service shall be borne by the General Contractor.

3. Field office shall be maintained until final acceptance and then be removed by the Contractor, no later than 15 days after acceptance of Project unless the Architect or Owner orders earlier removal.

G. Temporary Storage Sheds: Each Subcontractor shall provide and maintain such additional offices, storage sheds, and other temporary buildings or trailers on the Project as required for his own use. Location of sheds and trailers shall be located where directed by the Owner.

H. Sanitary Facilities: Toilet rooms within the new or existing building shall not be used by construction personnel. Provide sanitary facilities that include temporary toilets, wash facilities and drinking water fixtures. Comply with regulations and health codes for the type, number, location, operation, and maintenance of fixtures. Install where facilities will best serve the Project. Provide toilet tissue, paper towels, paper cups, and similar disposable materials for each facility. Provide covered waste containers for used materials.

1. Toilets: Install self-contained single-occupant toilet units of the chemical, aerated recirculation, or combustion type, properly vented and fully enclosed with a glass fiber reinforced polyester shell or similar nonabsorbent material. Use of pit-type privies will not be permitted.

2. Wash Facilities: Install wash facilities supplied with potable water at convenient locations for personnel involved in handling materials that require wash-up. Dispose of drainage properly. Supply cleaning compounds.

3. Drinking Water Facilities: Provide containerized tap-dispenser bottled-water type drinking water units.

I. First Aid Supplies: Comply with governing regulations.

J. Fire Extinguishers: Provide hand-carried, portable UL-rated, class `A' fire extinguishers for temporary offices and similar spaces. In other locations, provide hand-carried, portable, UL-rated, class `ABC' dry chemical extinguishers, or a combination of extinguishers of NFPA recommended classes for the exposures.

1. Comply with NFPA 10 and 241 for classification, extinguishing agent, and size required by location and class of fire exposure.

PART 3 EXECUTION

3.01 INSTALLATION

A. Use qualified personnel for installation of temporary facilities. Locate facilities where they serve the Project adequately and result in minimum interference with performance of the work. Relocate and modify facilities as required.

B. Provide each facility ready for use when needed to avoid delay. Maintain and modify as required. Do not remove until facilities are not longer needed, or are replaced by authorized use of completed permanent facilities.

3.02 TEMPORARY UTILITY INSTALLATION

A. General: Engage the appropriate local utility company to install temporary service. Where the company provides only part of the service, provide the remainder with matching, compatible materials and equipment; comply with the company's recommendations.

1. If required, obtain easements to bring temporary utilities to the site, where the Owner's easements cannot be used for that purpose.

2. Arrange with the company and existing users for a time when service can be interrupted, where necessary, to make connections for temporary services.

3. Provide adequate capacity at each stage of construction. Prior to temporary utility availability, provide trucked-in services.

B. Water Service: Install water service connected to nearest system, and distribution piping of sizes and pressures adequate for construction until permanent water service is in use.

1. Sterilization: Sterilize temporary water piping prior to use.

C. Temporary Electric Power Service: Provide weatherproof, grounded electric power service and distribution system of sufficient size, capacity, and power characteristics during construction period. Include meters, transformers, overload protected disconnects, automatic ground-fault interrupters and main distribution switch gear.

1. Power Distribution System: Install wiring, overhead, and rise vertically where least exposed to damage. Where permitted, wiring circuits not exceeding 125 volts, AC 20 ampere rating, and lighting circuits may be nonmetallic sheathed cable where overhead and exposed for surveillance.

2. Temporary wiring is to be laid out, balanced, and sized so as to produce a voltage drop of no more than five percent at the extreme end of the line when operating at full load.

3. Temporary work shall be installed in such a manner as not to interfere with the permanent construction. If such interference does occur, it shall be the responsibility of the Contractor to make such changes as may be required to overcome the interference. The cost of these changes will be included as part of the contract price.

4. The electrical work for construction purposes shall conform to all Federal, State (Ohio Safety Code IC-3) Specific Safety Requirements as well as the requirements of the National Electric Code and National Electrical Safety Code. The Electrical Contractor shall obtain and pay for required applications, permits, and inspection pertaining to this work. This cost shall also be included in the Contractor's price.

5. All temporary facilities are to be maintained and kept in good operating condition. Maintenance personnel necessary to perform this work shall be provided in accordance with the requirements. Maintenance time will include normal working hours for all trades and start up and shut down overtime as required.

6. Protect installation against weather damage, the normal operations of other trades, Owner's personnel, and visitors to the site.

D. Temporary Lighting: Install and operate temporary lighting that will fulfill security and protection requirements, without operating the entire system, and will provide adequate illumination for construction operations and traffic conditions.

E. Temporary Telephones: Provide temporary telephone service for all personnel engaged in construction activities, throughout the construction period.

1. All local calls shall be paid for by the General Contractor.

2. All long distance and toll calls shall be paid for by the party making the call.

3. At each telephone, post a list of important telephone numbers.

F. Sewers and Drainage: If sewers are available, provide temporary connections to remove effluent that can be discharged lawfully. If sewers are not available or cannot be sued, provide drainage ditches, dry wells, stabilization ponds and similar facilities. If neither sewers nor drainage facilities can be lawfully used for discharge of effluent, provide containers to remove and dispose of effluent off the site in a lawful manner.

1. Filter out excessive amounts of soil, construction debris, chemicals, oils and similar contaminants that might clog sewers or pollute waterways before discharge.

2. Provide earthen embankments and similar barriers in and around excavations and subgrade construction, sufficient to prevent flooding by runoff of storm water from heavy rains.

3. Dewatering Facilities and Drains: For temporary drainage and dewatering operations not associated with construction, comply with requirements of applicable Division 33 Sections. Where feasible, utilize the same facilities. Maintain excavations and construction free of water.

3.03 TEMPORARY CONSTRUCTION AND SUPPORT FACILITIES INSTALLATION

A. Locate field offices, storage sheds, sanitary facilities and other temporary construction and support facilities for easy access in locations as approved by Architect and Owner.

1. Maintain temporary construction and support facilities until near Substantial Completion. Remove prior to Substantial Completion. Personnel remaining after Substantial Completion will be permitted to use permanent facilities, under conditions acceptable to the Owner.

B. Temporary Heat: Provide temporary heat required by construction activities, for curing or drying of completed installations or protection of installed construction from adverse effects of low temperatures or high humidity. Select safe equipment that will not have a harmful effect on completed installations or elements being installed. Coordinate ventilation requirements to produce the ambient condition required and minimize consumption of energy.

C. Temporary Paving: The General Contractor shall construct and maintain temporary roads and paving to adequately support the indicated loading and to withstand exposure to traffic during the construction period. Locate temporary paving for roads, storage areas, and parking, where the same permanent facilities will be located. Review proposed modifications to permanent paving with Architect and Owner.

1. Paving:

a. Coordinate development of temporary paving with subgrade grading, compaction, installation, and stabilization of sub-base, and installation of base and finish courses of permanent paving.

b. Install temporary paving to minimize the need to rework the installations and result in permanent roads and paved areas that are without damage or deterioration when occupied by the Owner.

c. Delay installation of the final course of permanent asphalt concrete paving until immediately before Substantial Completion. Coordinate with weather conditions to avoid unsatisfactory results.

d. Extend temporary paving in and around the construction area as necessary to accommodate delivery and storage of materials, equipment usage, administration, and supervision.

D. Cold Weather Protection:

1. The General Contractor shall provide any necessary cold weather protection (enclosure, temporary heat, fuel, straw, etc.) to continue with the Work so as not to delay the Project. This includes any necessary protection of excavations to prevent freezing.

E. Project Identification and Temporary Signs: Prepare Project identification and other signs of the size indicated; install signs where indicated to inform the public and persons seeking entrance to the Project. Support on posts or framing of preservative treated wood or steel. Do not permit installation of unauthorized signs.

1. Temporary Signs: Prepare signs to provide directional information to construction personnel and visitors.

F. Temporary Exterior Lighting: Install exterior yard and sign lights so that signs are visible when work is being performed.

G. Collection and Disposal of Waste: The General Contractor shall be responsible to collect waste from construction areas and elsewhere daily. Comply with requirements of NFPA 241 for removal of combustible waste material and debris. Enforce requirements strictly. Do not hold materials more than seven (7) days during normal weather or 3 days when the temperature is expected to rise above 80 degrees F. (27 degrees C.). Handle hazardous, dangerous, or unsanitary waste materials separately from other waste by containerizing properly. Dispose of material in a lawful manner.

1. Refer to Sections 01 11 00 Summary of Work, 01 74 00 Cleaning and Waste Management and 02 41 13 Selective Site Demolition for additional requirements.

3.04 WATER CONTROL

A. The General Contractor shall provide, operate and maintain pumps or other equipment necessary to drain their work and keep excavation pits, trenches, and ditches including the entire sub-grade free of water under any circumstances that may arise.

B. Surface and Underground Water Control: Grade site to drain. Maintain excavations free of water. Provide, operate, and maintain pumping equipment. Protect site from puddling or running water. Provide water barriers as required to protect site from soil erosion. Provide dewatering of site as required.

3.05 SNOW REMOVAL

A. The General Contractor is responsible for snow and ice removal in their own work areas and shall provide same as required so as not to delay the Project.

B. The Contractor shall provide and pay for necessary snow removal as may be required for the completion of any slabs. Calcium Chloride will not be permitted for snow melting on any building slab or material.

3.06 SECURITY AND PROTECTION FACILITIES INSTALLATION:

A. Enclosure Fence: At Contractor's option, when excavation begins, install an enclosure fence to enclose the entire work area or a portion determined to accommodate construction operations, as approved by the Owner and Architect.

B. Environmental Protection: Operate temporary facilities and conduct construction by methods that comply with environmental regulations, and minimize the possibility that air, waterways, and subsoil might be contaminated or polluted. Avoid use of tools and equipment which produce harmful noise. Restrict use of noise making tools and equipment to hours that will minimize complaints.

C. Temporary Police: Whenever Police are required for traffic coordination, etc., the responsibility for providing these services and paying the Police shall be that of the responsible General Contractor.

3.07 OPERATION

A. Enforce strict discipline in use of temporary facilities. Limit availability to intended use to minimize abuse. Maintain facilities in good operating condition until removal.

B. Protect from damage by freezing temperatures and the elements.

1. Maintain operation of enclosures, heating, cooling, humidity control, ventilation, and similar facilities on a 24-hour day basis to achieve indicated results and to avoid damage.

2. Prevent piping from freezing. Maintain markers for underground lines. Protect from damage during excavation operations.

3.08 TERMINATION AND REMOVAL

A. Remove each facility when the need has ended, or has been replaced by a permanent facility, or no later than Substantial Completion. Complete or restore construction delayed because of interference with the facility. Repair damaged Work, clean exposed surfaces, and replace construction that cannot be satisfactorily repaired.

B. Temporary facilities are property of the Contractor.

C. Remove paving that is not acceptable for integration into permanent paving. Where the area is intended for landscape development, remove soil and fill that does not comply with requirements. Remove materials contaminated with road oil, asphalt and other petrochemical compounds, and other substances that might impair growth of plant materials. Repair or replace street paving, curbs, and sidewalks at the temporary entrances.

D. At Substantial Completion, renovate permanent facilities used during the construction period back to preconstruction operation.

3.09 INSTALLATION

A. Use qualified personnel for installation of temporary facilities. Locate facilities where they serve the Project adequately and result in minimum interference with performance of construction activities. Relocate and modify facilities as required.

B. Provide each facility ready for use when needed to avoid delay. Maintain and modify as required. Do not remove until facilities are no longer needed, or are replaced by authorized use of completed permanent facilities.

END OF SECTION 01 50 00

SECTION 01 56 16
DUST BARRIERS

PART 1 GENERAL

1.01 SUMMARY

A. Section Includes:

1. Temporary Dust and Enclosure Protection Partitions.

B. Related Sections

1. Section 01 35 00 - Special Project Procedures
2. Section 01 35 16 - Alteration Project Procedures
3. Section 02 41 19 - Selective Structure Demolition

1.02 REFERENCES

A. The American Society of Mechanical Engineers (ASME) Publications:

1. B18.2.1 "Square and Hex Bolts and Screws, Inch Series"
2. B18.6.1 "Wood Screws (Inch Series)"

B. ASTM International (ASTM) Publications: (Former American Society for Testing and Materials)

1. A307 "Standard Specification for Carbon Steel Bolts and Studs, 60 000 PSI Tensile Strength"
2. A563 "Standard Specification for Carbon and Alloy Steel Nuts"
3. C645 "Standard Specification for Nonstructural Steel Framing Members"
4. F568M-07 "Standard Specification for Carbon and Alloy Steel Externally Threaded Metric Fasteners"

C. American Wood-Preservers's Association (AWPA) Publications:

1. C20 "Structural Lumber - Fire-Retardant Treatment by Pressure Process"
2. C27 "Plywood - Fire-Retardant Treatment by Pressure Process"

D. CABO NER-272.

E. Timber Products Inspection, Inc.

F. Underwriters Laboratories, Inc. (UL)

G. US General Services Administration Federal Specifications (FS) Publications:

1. FS FF-N-105.

1.03 DEFINITIONS

A. The Contract Drawings delineate the type and extent of the Work for this Project.

1.04 PROJECT CONDITIONS

A. Occupancy: The Owner will be continuously occupying areas of building immediately adjacent to areas of where temporary barriers are to be erected. Perform installation of barrier work in manner that will minimize need for disruption of the Owner's normal operations.

B. Maintain access to existing walkways, corridors, or other occupied or used facilities without written permission from authorities having jurisdiction.

C. Protections:

1. Protect from damage existing finish work that is to remain in place and becomes exposed during construction of barriers.
2. Construct temporary insulated solid dustproof partitions where required to separate areas where noisy or extensive dirt or dust operations are performed. Equip partitions with dustproof doors and security locks if required.
3. Remove protections at completion of work.

PART 2 PRODUCTS

2.01 TEMPORARY DUST AND PROTECTION PARTITIONS

A. Dust partition shall be constructed as described within the Contract Drawings and shall be provided in all locations necessary and as directed by the Construction Manager, or as required for protection of existing adjacent finished surfaces, new construction, furniture, etc. Partitions and enclosures shall be erected prior to commencing demolition or alteration work and shall be removed as soon as the work is complete.

2.02 DUST PROTECTION MATERIALS

A. Wood Studs/ Framing:

1. Provide fire-retardant framing of the following grade and species:
   a. Grade: Construction.
   b. Species: Eastern softwoods; NELMA.
   c. Species: Spruce-pine-fir south; NELMA.
   d. Species: Hem-fir north; NLGA.
   e. Species: Spruce-pine-fir north; NLGA.
   f. Species: Northern species; NLGA.
   g. Species: Hem-fir; WCLIB or WWPA.
   h. Species: Spruce-pine-fir south; WCLIB or WWPA.
   i. Species: Western woods; WCLIB or WWPA.
   j. Species: Any species above. Exception: Southern (yellow) pine is not permitted.
2. Size and strength suitable for application.
3. Fire-Retardant Treatment: Pressure impregnate lumber and plywood with fire-retardant chemical to comply with AWPA C20 (lumber) and C27 (Plywood), respectively, for treatment type indicated below. Identify fire-retardant treated wood lumber with appropriate classification marking of Underwriters Laboratories, Inc. (UL), U.S. Testing, Timber Products Inspection, Inc., or another testing and inspecting agency acceptable to authorities having jurisdiction.
   a. Interior Type A: For interior locations, use chemical formulation that produces treated lumber and plywood with the following properties under conditions present after installation:
   b. Bending strength, stiffness, and fastener-holding capacities are not reduced below values published by manufacturer of chemical formulation under elevated temperature and humidity conditions simulating installed conditions when tested by a qualified independent testing agency.
   c. No form of degradation occurs due to acid hydrolysis or other causes related to treatment.
   d. Contact with treated wood does not promote corrosion of metal fasteners.

B. Metal Studs:

1. Steel Studs and Runners: ASTM C 645, with flange edges of studs bent back 90 degrees and doubled over to form 3/16" wide minimum lip (return) and complying with the following requirements for minimum thickness of base (uncoated) metal and for depth:

   a. Thickness: Minimum 0.027" (22 gage), unless otherwise indicated.

   b. Depth: 3-5/8", unless otherwise indicated.

C. Fire Retardant Plastic Sheeting

1. Minimum allowable barrier material.

D. Reinforced / Fire Retardant / Fire Retardant / Anti-Static Plastic Sheeting

1. Required only for large spans or when material will be in place for an extended period of time.

E. Fire Retardant Painted or Fire Treated Plywood:

1. Provide fire-retardant-treated plywood panels with grade, C-D Plugged Exposure 1, in thickness indicated or, if not otherwise indicated, not less than ½" thick.

F. Fasteners

1. Nails, Wire, Brads, and Staples: FS FF-N-105.

2. Power-Driven Fasteners: CABO NER-272.

3. Wood Screws: ASME B18.6.1.

4. Lag Bolts: ASME B18.2.1. (ASME B18.2.3.8M)

5. Bolts: Steel bolts complying with ASTM A307, Grade A (ASTM F568, Property Class 4.6); with ASTM A563 (ASTM A563M) hex nuts and, where indicated, flat washers.

2.03 TEMPORARY ENCLOSURE PROTECTION MATERIALS

A. Metal Stud Framing:

   a. Manufacturers: Subject to compliance with requirements, provide products by one of the following:

      1) Dietrich Metal Framing; a Worthington Industries Company.

      2) MarinoWare, a division of Ware Industries.

      3) SCAFCO Corporation

      4) The Steel Network, Inc.

2. Steel Stud Framing: Manufacturer's standard C-shaped steel studs, of web depths indicated, punched, with stiffened flanges, and as follows:

   a. Minimum Base-Metal Thickness: 0.0538 inch

   b. Flange Width: 1-5/8 inches

   c. Depth: 3-5/8", unless otherwise indicated.

3. Steel Track: Manufacturer's standard U-shaped steel track, of web depths indicated, unpunched, with unstiffened flanges, and as follows:

4. Steel Sheet: ASTM A 1003 Structural Grade, Type H, metallic coated, of grade and coating weight as follows:

   a. Grade: ST33H

   b. Coating: G60 (Z180), A60 (ZF180), or equivalent.

B. Fire Retardant Plastic Sheeting

1. Minimum allowable barrier material.

C. Reinforced / Fire Retardant / Fire Retardant / Anti-Static Plastic Sheeting

1. Required only for large spans or when material will be in place for an extended period of time.

D. Fire Retardant Treated Plywood:

1. Sheathing 3/4 inch fire retardant treated plywood 8'-0" high vertically. Joints shall occur at framing. Provide horizontal framing where necessary to comply with this requirement

E. Insulation: 3-1/2 Unfaced Glass Fiber Batt Insulation:

1. ASTM C665, Type I (blankets without membrane facing); consisting of fibers; with maximum flame-spread and smoke-developed indexes of 25 and 50, respectively; passing ASTM E136 for combustion characteristics.

F. Air-Infiltration Barrier:

1. Air retarder complying with ASTM E1677; made from polyolefins; either cross-laminated films, woven strands, or spunbonded fibers; coated or uncoated; with or without perforations to transmit water vapor but not liquid water; and as follows:

a. Minimum Thickness: 3 mils.

b. Minimum Water-Vapor Transmission: 10 perms when tested according to ASTM E96, Procedure A.

c. Maximum Flame Spread: 25 per ASTM E84.

d. Minimum Allowable Exposure Time: 3 months.

e. Membrane shall be free from holes and breaks other than those created by fasteners and construction system due to attachment.

f. Building Wrap Tape: Pressure-sensitive plastic tape recommended by building wrap manufacturer for sealing joints and penetrations in building wrap.

2.04 TEMPORARY PLASTIC SHEETING DUST PARTITIONS

A. Partitions in all cases shall be secured against the ceiling construction above and the wall construction by 3-5/8" metal studs or minimum 2" x 4" fire rated wood studs and gasketed. Dust partition shall extend from floor slab to ceiling slab above.

B. Provide perimeter wood or metal framing covering the full opening. The wood or metal framing shall be gasketed, using a 1" X 3" flexible compressive neoprene or similar material between framing and adjacent construction.

C. Overlap joints a minimum of 12 inches and tape to provide a dust tight enclosure. Tape (duct or masking) entire perimeter, around any penetrations and at all seams and joints in sheathing materials.

D. Plastic sheeting material shall be fire retardant. Provide extra length in all cases so that excess material may rest on the floor and be weighted down with minimum 2" X 4" fire retardant wood planks or other acceptable means to ensure a dust tight enclosure is maintained. It may be advantageous to provide considerable excess material so that the partition may be varied to allow access around existing equipment, items remaining in place, new items being installed, etc. without danger of material separating from the floor.

E. Partitions shall be maintained in good working order at all times until removal.

F. Plastic sheeting shall not be used in any areas where flame tools are in use.

G. Self adhesive foam tape can be used to seal the perimeter of dust walls against smooth building surfaces to avoid damage to building finishes in areas which cannot be restored.

H. Partitions shall be provided with doors as required for access of work, equipement, and debris. Provide proper wood trim and full contact stops. Gasket the head and jamb with neoprene or similar compressive gasket and provide bottom sweep. Doors shall be hung with adequate hinges and equipped with latch sets.

1. Aluminum storm doors will be an acceptable alternative.

I. To minimize disturbance of the Owner's operation, components for the dust partition shall be pre-measured and precut.

J. Partitions shall be maintained in good working order at all times until removal.

2.05 TEMPORARY ENCLOSURE PROTECTION

A. Provide temporary weather tight dust barrier/enclosure protection at areas indicated on the construction drawings.

1. Enclosure protection shall be constructed of metal studs spaced not more than 16 inches on center, with continuous top and bottom plates. Provide intermediate reinforcing necessary to maintain a rigid partition free from movement. Provide partition with unfaced batt insulation.

a. Interior Face: Apply one layer 5/8" type-X gypsum board over plastic sheeting applied to studs the full length and height of the partition: Overlap joints and tape to provide an airtight enclosure.

b. Exterior Face: Provide air infiltration barrier, applied to face of fire retardant treated plywood sheathing.

1) Provide metal flashing, trim and sealant at joints as indicated on drawings to make water tight.

PART 3 EXECUTION

3.01 PREPARATION

A. Cover and protect furniture, equipment and fixtures to remain from soiling or damage when demolition work is performed in rooms or areas from which such items have not been removed.

B. Erect and maintain dust-proof partitions and closures as required to prevent spread of dust or fumes to occupied portions of the building.

1. Provide weatherproof closures for exterior openings resulting from demolition work.

3.02 PLASTIC SHEETING PARTITIONS

A. Partitions in all cases shall be secured against the ceiling construction above and the wall construction by 3-5/8" metal studs or minimum 2" x 4" fire rated wood studs and gasketed. Dust partition shall extend from floor slab to ceiling slab above.

B. Provide perimeter wood or metal framing covering the full opening. The wood or metal framing shall be gasketed, using a 1" X 3" flexible compressive neoprene or similar material between framing and adjacent construction.

C. Overlap joints a minimum of 12 inches and tape to provide a dust tight enclosure. Tape (duct or masking) entire perimeter, around any penetrations and at all seams and joints in sheathing materials.

D. Plastic sheeting material shall be fire retardant. Provide extra length in all cases so that excess material may rest on the floor and be weighted down with minimum 2" X 4" fire retardant wood planks or other acceptable means to ensure a dust tight enclosure is maintained. It may be advantageous to provide considerable excess material so that the partition may be varied to allow access around existing equipment, items remaining in place, new items being installed, etc. without danger of material separating from the floor.

E. Partitions shall be maintained in good working order at all times until removal.

F. Plastic sheeting shall not be used in any areas where flame tools are in use.

G. Self adhesive foam tape can be used to seal the perimeter of dust walls against smooth building surfaces to avoid damage to building finishes in areas which cannot be restored.

H. Partitions shall be provided with doors as required for access of work, equipement, and debris. Provide proper wood trim and full contact stops. Gasket the head and jamb with neoprene or similar compressive gasket and provide bottom sweep. Doors shall be hung with adequate hinges and equipped with latch sets.

1. Aluminum storm doors will be an acceptable alternative.

I. To minimize disturbance of the Owner's operation, components for the dust partition shall be pre-measured and precut.

J. Partitions shall be maintained in good working order at all times until removal.

3.03 PLYWOOD DUST PARTITION

A. Provide dust partition as described below in areas as indicated on the construction drawings.

1. Maintain maximum possible separation from items / surfaces to be protected.

B. Dust partition shall be constructed of minimum 2" X 4" wood studs spaced not more than 24 inches on center vertically, with continuous top and bottom plates. Provide intermediate reinforcing necessary to maintain a rigid partition free from movement. Provide double stud at door openings.

C. Apply plastic sheeting to studs the full length and height of the partition (refer to dust protection notes). Overlap joints and tape to provide an airtight enclosure.

D. Partition shall then be faced with 1/2 inch plywood 8'-0" high vertically. Joints shall occur at framing. Provide horizontal framing where necessary to comply with this requirement. Tape all joints.

E. Partitions shall be provided with doors as shown and as required for access of equipment and debris. Provide proper wood trim and full contact stops. Gasket the head and jamb with neoprene or similar compressive gasket and provide bottom sweep. Doors shall be hung with adequate hinges and equipped with latch sets.

1. Aluminum storm doors will be an acceptable alternative.

F. To minimize disturbance of the Owner's operation, components for the dust partition shall be pre-measured and precut.

G. Partitions shall be maintained in good working order at all times until removal.

3.04 GYPSUM WALLBOARD TEMPORARY PARTITIONS

A. Partitions in all cases shall be secured against the ceiling construction above and the wall construction by 3-5/8" metal studs or minimum 2" x 4" wood studs and gasketed. Dust partition shall extend from floor slab to ceiling slab above.

B. Provide perimeter wood or metal framing covering the full opening. The wood or metal framing shall be gasketed, using a 1" X 3" flexible compressive neoprene or similar material between framing and adjacent construction.

C. Dust partition shall be constructed of minimum 2" X 4" fire-retardant wood studs spaced not more than 24 inches on center vertically, with continuous top and bottom plates. Provide intermediate reinforcing necessary to maintain a rigid partition free from movement. Provide double stud at door openings.

D. Apply plastic sheeting to studs the full length and height of the partition (refer to dust protection notes). Overlap joints and tape to provide an airtight enclosure.

E. Partitions shall then be faced on occupied side with painted 5/8-inch gypsum wallboard, and fire-retardant plywood on construction side. Gypsum wallboard joints shall be taped. Joints shall occur at framing. Provide horizontal framing where necessary to comply with this requirement.

1. Insulate partitions to provide noise protection to occupied areas.

F. Partitions shall be provided with doors as shown and as required for access of equipment and debris. Provide proper wood trim and full contact stops. Gasket the head and jamb with neoprene or similar compressive gasket and provide bottom sweep. Doors shall be hung with adequate hinges and equipped with latch sets.

1. Aluminum storm doors will be an acceptable alternative.

G. To minimize disturbance of the Owner's operation, components for the dust partition shall be pre-measured and precut.

H. Partitions shall be maintained in good working order at all times until removal.

3.05 PROTECTION OF FINISHED ROOFS

A. Any work on the roof must involve the protection of surrounding roof work area as well as walk ways to the work areas. This protection, <u>at minimum</u>, shall be 2 inch thick rigid "Styrofoam" by Dow, or approved substitution, covered with one layer of 5/8 inch plywood. Surfaces must be properly ballasted.

B. Set the layer of foam board onto the roof and butt tight. Tape joints to retain insulation in place. Lay plywood over the entire area. Stagger joints in the layer of insulation and fasten plywood at corners. Ballast plywood appropriately.

C. At completion of work completely remove protection. Restore roof to its original conditions acceptable to the Owner.

3.06 CLEAN-UP AND REPAIR

A. Upon completion of work, remove tools, equipment and demolished materials from site. Remove protections and leave interior areas broom clean.

END OF SECTION 01 56 16

SECTION 01 60 00
PRODUCT REQUIREMENTS

PART 1 GENERAL

1.01 SUMMARY

A. Section Includes:

1. Products
2. Transportation and Handling
3. Storage and Protection
4. General Product Requirements
5. Owner Supplied Materials

B. Related Sections:

1. Section 01 11 00 - Summary of Work
2. Section 01 25 00 – Substitution Procedures
3. Section 01 33 00 – Submittal Procedures
4. Section 01 45 00 - Quality Control

1.02 DEFINITIONS

A. Products: Items purchased for incorporating into the Work, whether purchased for Project or taken from previously purchased stock. The term “product” includes the terms “material,” “equipment,” “system,” and terms of similar intent.

1. Named Products: Items identified by manufacturer’s product name, including make or model number or other designation shown or listed in manufacturer’s published product literature, that are current as of date of the Contract Documents.
2. Basis-of-Design Product Specification: A specification in which a specific manufacturer's product is named and accompanied by the words "basis-of-design product," including make or model number or other designation, to establish the significant qualities related to type, function, dimension, in-service performance, physical properties, appearance, and other characteristics for purposes of evaluating comparable products of additional manufacturers named in the specification.

1.03 QUALITY ASSURANCE

A. Do not use materials and equipment removed from existing premises, except as specifically permitted by the Contract Documents.

B. Provide interchangeable components of the same manufacturer, for components being replaced.

C. Compatibility of Options: If Contractor is given the option of selecting between two or more products for use on Project, product selected shall be compatible with products previously selected, even if previously selected products were also options.

1.04 PRODUCT DELIVERY, STORAGE, AND HANDLING

A. Deliver, store, and handle products using means and methods that will prevent damage, deterioration, and loss, including theft. Comply with manufacturer’s written instructions.

B. Delivery and Handling:

1. Schedule delivery to minimize long-term storage at Project site and to prevent overcrowding of construction spaces.

2. Coordinate delivery with installation time to ensure minimum holding time for items that are flammable, hazardous, easily damaged, or sensitive to deterioration, theft, and other losses.

3. Deliver products to Project site in an undamaged condition in manufacturer's original sealed container or other packaging system, complete with labels and instructions for handling, storing, unpacking, protecting, and installing.

4. Inspect products on delivery to ensure compliance with the Contract Documents and to ensure that products are undamaged and properly protected.

C. Storage:

1. Store products to allow for inspection and measurement of quantity or counting of units.

2. Store materials in a manner that will not endanger Project structure.

3. Store products that are subject to damage by the elements under cover in a weathertight enclosure above ground, with ventilation adequate to prevent condensation.

4. Store cementitious products and materials on elevated platforms.

5. Store foam plastic from exposure to sunlight, except to extent necessary for period of installation and concealment.

6. Comply with product manufacturer's written instructions for temperature, humidity, ventilation, and weather-protection requirements for storage.

7. Protect stored products from damage and liquids from freezing.

8. Provide a secure location and enclosure at Project site for storage of materials and equipment by Owner's construction forces. Coordinate location with Owner.

1.05 OWNER SUPPLIED MATERIALS

A. Refer to Section 01 11 00 "Summary of Work" and the Drawings for Owner supplied work and materials.

B. The Contractor shall coordinate and take delivery on-site of all Owner furnished materials to be installed by Contractor.

1. Upon accepted receipt, Contract shall be entirely responsible for quantity, theft or damage.

C. Contractor to provide to Architect appropriate quantities for installation indicated, including spare materials, for Owner furnished, Contractor installed items, including FFE items.

1.06 PRODUCT WARRANTIES

A. Warranties specified in other Sections shall be in addition to, and run concurrent with, other warranties required by the Contract Documents. Manufacturer's disclaimers and limitations on product warranties do not relieve Contractor of obligations under requirements of the Contract Documents.

1. Manufacturer's Warranty: Written warranty furnished by individual manufacturer for a particular product and specifically endorsed by manufacturer to Owner.

2. Special Warranty: Written warranty required by the Contract Documents to provide specific rights for Owner.

PART 2 PRODUCTS

2.01 GENERAL PRODUCT REQUIREMENTS:

A. Provide products that comply with the Contract Documents, that are undamaged and, unless otherwise indicated, that are new at time of installation.

1. Provide products complete with accessories, trim, finish, fasteners, and other items needed for a complete installation and indicated use and effect.
2. Where products are accompanied by the term "as selected," Architect will make selection.
3. Where products are accompanied by the term "match sample," sample to be matched is Architect's.
4. Descriptive, performance, and reference standard requirements in the Specifications establish "salient characteristics" of products.

B. Proprietary Specification Requirements: Where Specifications name only a single product or manufacturer. No substitutions will be permitted.

C. Semi-Proprietary Specification Requirements: Where Specifications name one or more products or manufacturers, provide on the of the products indicated. No substitutions will be permitted.

D. Semi-Open Proprietary Specification Requirements: Where Specifications name one or more products or manufacturers, provide one of the products indicated.

1. Where Specifications specify products or manufacturers by name, accompanied by the term "Approved Substitution", the Architect will allow products as substitutions only after complying with the requirements of the General Conditions and Section 01 25 00 "Substitution Procedures".

PART 3 EXECUTION

Not Used

END OF SECTION 01 60 00

SECTION 01 71 23
FIELD ENGINEERING

PART 1 GENERAL

1.01 SUMMARY

A. Section Includes:

1. Quality Assurance
2. Submittals
3. Project Record Documents
4. Survey Requirements
5. Examination
6. Survey Reference Points

B. Related Sections:

1. General Conditions: Basic site engineering requirements.
2. Section 01 77 00 - Contract Closeout: Project Record Documents.

1.02 QUALITY ASSURANCE

A. Employ a Land Surveyor or Engineer registered in the State where project is located and acceptable to the Owner and Architect, to perform survey work of this section.

B. Submit evidence of Surveyor's or Engineer's Errors and Omissions insurance coverage in the form of an Insurance Certificate.

1.03 SUBMITTALS

A. Submit a copy of registered site drawing and a certificate signed by the Land Surveyor or Engineer, that the elevations and locations of the Work are in conformance with Contract Documents.

B. On request, submit documentation verifying accuracy of survey work.

1.04 PROJECT RECORD DOCUMENTS

A. Maintain a complete and accurate log of control and survey work as it progresses.

B. On completion of foundation walls and major site improvements, prepare a certified survey illustrating dimensions, locations, angles, and elevations of construction and site work.

1.05 SURVEY REQUIREMENTS

A. Provide field engineering services. Utilize recognized engineering survey practices.

B. Establish a minimum of two permanent bench marks on site, referenced to established control points. Record locations, with horizontal and vertical data, on project record documents.

C. Submit Project Record Documents under provisions of Section 01 78 39.

D. Establish elevations, lines and levels. Locate and lay out by instrumentation and similar appropriate means.

E. Periodically verify layouts by same means

PART 2 PRODUCTS

Not Used

PART 3 EXECUTION

3.01 EXAMINATION

A. Verify locations of survey control points prior to starting work. Verify set-backs and easements, confirm drawing dimensions and elevations.

B. Promptly notify Architect of any discrepancies discovered.

3.02 SURVEY REFERENCE POINTS

A. Contractor to locate and protect survey control and reference points.

B. Protect survey control points prior to starting site work; preserve permanent reference points during construction.

C. Promptly report to Architect the loss or destruction of any reference point or relocation required because of changes in grades or other reasons.

D. Replace dislocated survey control points based on original survey control. Make no changes without prior written notice to Architect.

END OF SECTION 01 71 23

SECTION 01 73 29

CUTTING AND PATCHING

PART 1 GENERAL

1.01 SUMMARY

A. Section Includes:

1. Administrative and Procedural Requirements for Cutting and Patching

B. Related Sections:

1. Refer to General Conditions Division 01 and other Sections of these Specifications, including Divisions 21 to 28, for specific requirements and limitations applicable to cutting and patching individual parts of the work.
2. Section 01 35 16 Alteration Project Procedures.
3. Section 02 41 19 - Selective Structure Demolition.

1.02 CUTTING AND PATCHING PROPOSAL

A. Where approval of procedures is required before proceeding, submit a proposal describing procedures in advance of the time cutting and patching will be performed. Include the following information, as applicable:

1. Describe the extent of cutting and patching required and how it is to be performed. Indicate why it cannot be avoided.
2. Describe anticipated results, include changes to structural elements and operating components and changes in the building's appearance and other visual elements.
3. List products to be used and entities that will perform work.
4. Indicate dates when cutting and patching is to be performed.
5. List utilities that will be disturbed, including those that will be relocated and those that will be temporarily out-of service. Indicate how long service will be disrupted.
6. Approval by the Architect to proceed does not waive the Architect's right to later require complete removal and replacement of work found to be unsatisfactory.

1.03 CUTTING AND PATCHING WORK

A. Do not cut and patch structural elements, high voltage, water or steam lines in a manner that would reduce the load-carrying capacity or load deflection ratio or cause disruption of service to the building. Obtain approval of the cutting and patching proposal before cutting and patching structural elements.

1.04 OPERATIONAL AND SAFETY LIMITATIONS

A. Do not cut and patch operating elements or safety components in a manner that would reduce their capacity to perform as intended, or would increase maintenance, or decrease operational life or safety. Obtain approval of the cutting and patching proposal before cutting and patching operating elements or safety related systems.

1.05 VISUAL REQUIREMENTS

A. Do not cut and patch construction exposed on the exterior or in occupied spaces in a manner that would reduce the building's aesthetic qualities or result in visual evidence of cutting and patching. Remove and replace Work cut and patched in a visually unsatisfactory manner.

PART 2 PRODUCTS

2.01 MATERIALS

A. Use materials identical to existing materials. If identical materials are not available or cannot be used where exposed surfaces are involved, use materials that match existing adjacent surfaces to the fullest extent possible. Use materials whose performance will equal or surpass that of existing materials.

PART 3 EXECUTION

3.01 EXAMINATION

A. Before cutting, examine surfaces to be cut and patched and conditions under which cutting and patching is to be performed. Take corrective action before proceeding if unsafe or unsatisfactory conditions are encountered.

3.02 PREPARATION

A. Provide temporary support of work to be cut.

3.03 CLEANING

A. Thoroughly clean areas and spaces where cutting and patching is performed or used as access. Remove paint, mortar, oils, putty and similar items. Thoroughly clean piping, conduit, and similar features before painting or finishing is applied. Restore damaged pipe covering to its original condition.

3.04 PROTECTION

A. Protect existing construction during cutting and patching to prevent damage. Provide protection from adverse weather conditions for portions that might be exposed during cutting and patching operations.

1. Avoid interference with use of adjoining areas or interruption of free passage to adjoining areas.
2. Take all precautions to avoid cutting existing pipe, conduit, or ductwork serving the building, but scheduled to be removed, or relocated until provisions have been made to bypass them.
3. Provide temporary support of Work to be cut.

3.05 PERFORMANCE

A. Employ skilled workmen to perform cutting and patching. Proceed with cutting and patching at the earliest feasible time and complete without delay.

B. Cut existing construction to provide for the installation of other components or the performance of other construction activities and the subsequent fitting and patching required to restore surfaces to their original condition.

3.06 CUTTING

A. Cut existing construction using methods least likely to damage elements to be retained or adjoining construction. Where possible, review procedures with the original installer. Comply with the original installer's recommendations.

B. All cutting of areas shall be by Contractor requiring cutting, except where noted otherwise in the Specifications and/or Drawings.

C. Where cutting is required, use hand or small power tools designed for sawing or grinding, not hammering and chopping. Cut holes and slots to size required with minimum disturbance of adjacent surfaces. Temporarily cover openings when not in use. To avoid marring existing finished surfaces, cut or drill from the exposed or finished side into concealed surfaces.

D. Comply with requirements of applicable sections of Division 02 where cutting and patching requires excavating and backfilling.

E. Cut through concrete and masonry using a cutting machine such as a carborundum saw or diamond core drill.

3.07 PATCHING

A. Patch with durable seams that are as invisible as possible. Comply with specified tolerances.

B. All patching shall be by Contractor doing cutting work and shall be performed by trade who would customarily be performing that type of work.

A. Restore exposed finishes of patched areas and extend finish restoration into retained adjoining construction in a manner that will eliminate evidence of patching and refinishing.

1. Where patching occurs in a smooth painted surface, extend final paint coat over entire unbroken surface containing the patch, after the patched area has received primer and second coat.

2. Patching shall include painting of surface in areas not scheduled for new paint. Paint shall be extended to nearest corner or other termination point as acceptable to the Architect.

3.08 CLEANING

A. Thoroughly clean areas and spaces where cutting and patching is performed or used as access. Remove paint, mortar, oils, putty and similar items. Thoroughly clean piping, conduit and similar features before painting or finishing is applied. Restore damaged pipe covering to its original condition.

END OF SECTION 01 73 29

SECTION 01 74 00

CLEANING AND WASTE MANAGEMENT

PART 1 GENERAL

1.01 SUMMARY

A. Section Includes:

1. Throughout all phases and items of the construction period, maintain the building and site in a standard of cleanliness as described in this Section.

B. Related Sections:

1. Section 01 11 00 Summary of Work
2. Section 02 41 13 Selective Site Demolition
3. In addition to standards described in this Section, comply with all requirements for cleaning-up as described in various other Sections of these Specifications.

1.02 QUALITY ASSURANCE

A. Inspection: Conduct daily inspection, and more often if necessary, to verify that requirements of cleanliness are being met

B. Codes and Standards: In addition to the standards described in this Section, comply with all pertinent requirements of Governmental agencies having jurisdiction.

C. Disposal of volatile fluid wastes (such as mineral spirits, oil, or paint thinner) in storm or sanitary sewer systems or into streams or waterways is not permitted.

D. Separate recyclable demolished materials from other demolished materials to the maximum extent possible. Separate recyclable materials by type. Refer to Section 02 41 13.

PART 2 PRODUCTS

2.01 CLEANING MATERIALS AND EQUIPMENT

A. Provide all required personnel, equipment, and materials needed to maintain the specified standard of cleanliness.

2.02 COMPATIBILITY

A. Use only the cleaning materials and equipment which are compatible with the surface being cleaned, as recommended by the manufacturer of the material or as approved by the Owner's Representative.

PART 3 EXECUTION

3.01 PROGRESS CLEANING

A. General: Clean Project site and work areas daily, including common areas. Coordinate progress cleaning for joint-use areas where more than one installer has worked. Enforce requirements strictly. Dispose of materials lawfully.

1. Comply with requirements in NFPA 241 for removal of combustible waste materials and debris.
2. Do not hold materials more than 7 days during normal weather or 3 days if the temperature is expected to rise above 80 deg F.
3. Containerize hazardous and unsanitary waste materials separately from other waste. Mark containers appropriately and dispose of legally, according to regulations.

B. Site: Maintain Project site free of waste materials and debris.

C. Work Areas: Clean areas where work is in progress to the level of cleanliness necessary for proper execution of the Work.

1. Remove liquid spills promptly.

2. Where dust would impair proper execution of the Work, broom-clean or vacuum the entire work area, as appropriate.

D. Installed Work: Keep installed work clean. Clean installed surfaces according to written instructions of manufacturer or fabricator of product installed, using only cleaning materials specifically recommended. If specific cleaning materials are not recommended, use cleaning materials that are not hazardous to health or property and that will not damage exposed surfaces.

E. Concealed Spaces: Remove debris from concealed spaces before enclosing the space.

F. Exposed Surfaces in Finished Areas: Clean exposed surfaces and protect as necessary to ensure freedom from damage and deterioration at time of Substantial Completion.

G. Waste Disposal: Burying or burning waste materials on-site will not be permitted. Washing waste materials down sewers or into waterways will not be permitted.

H. During handling and installation, clean and protect construction in progress and adjoining materials already in place. Apply protective covering where required to ensure protection from damage or deterioration at Substantial Completion.

I. Clean and provide maintenance on completed construction as frequently as necessary through the remainder of the construction period. Adjust and lubricate operable components to ensure operability without damaging effects.

J. Limiting Exposures: Supervise construction operations to assure that no part of the construction, completed or in progress, is subject to harmful, dangerous, damaging, or otherwise deleterious exposure during the construction period.

1. As required preparatory to installation of succeeding materials, clean the structures or pertinent portions thereof to the degree of cleanliness recommended by the manufacturer of the succeeding material, using all equipment and materials required to achieve the required cleanliness.

3.02 FINAL CLEANING

A. General: Provide final cleaning. Conduct cleaning and waste-removal operations to comply with local laws and ordinances and Federal and local environmental and antipollution regulations.

B. Cleaning: Employ experienced workers or professional cleaners for final cleaning.

C. Definition: Except as otherwise specifically provided, "Clean" (for the purpose of this Article) shall be interpreted as meaning the level of cleanliness generally provided by commercial building maintenance Subcontractors using commercial quality building maintenance equipment and materials.

D. Preparation: Prior to completion of the work, remove from the Project site all tools, temporary structures, surplus materials, equipment, scrap, debris, and waste.

1. Complete the following cleaning operations before requesting inspection for certification of Substantial Completion for entire Project or for a portion of the Project:

a. Clean Project site, yard, and grounds, in areas disturbed by construction activities, including landscape development areas, of rubbish, waste material, litter, and other foreign substances.

b. Sweep paved areas broom clean. Remove petrochemical spills, stains, and other foreign deposits.

c. Rake grounds that are neither planted nor paved to a smooth, even-textured surface.

d. Remove snow and ice to provide safe access to building.

e. Clean exposed exterior hard-surfaced finishes to a dirt-free condition, free of stains, films, and similar foreign substances. Avoid disturbing natural weathering of exterior surfaces. Restore reflective surfaces to their original condition.

f. Clean areas traversed by construction personnel.

g. Clean the site, including landscape development areas, of rubbish, litter, and other foreign substances. Sweep paved areas broom clean. Remove stains, spills, and other foreign deposits.

h. Touch up and otherwise repair and restore marred, exposed finishes and surfaces. Replace finishes and surfaces that cannot be satisfactorily repaired or restored or that already show evidence of repair or restoration.

i. Wipe surfaces of mechanical and electrical equipment and similar equipment. Remove excess lubrication, paint and mortar droppings, and other foreign substances.

j. Replace parts subject to unusual operating conditions.

k. Clean all electrical panels.

l. Clean light fixtures, lamps, globes, and reflectors to function with full efficiency. Replace burned-out bulbs, and those noticeably dimmed by hours of use, and defective and noisy starters in fluorescent and mercury vapor fixtures to comply with requirements for new fixtures.

m. Leave Project clean and ready for occupancy.

E. Comply with safety standards for cleaning. Do not burn waste materials. Do not bury debris or excess materials on Owner's property. Do not discharge volatile, harmful, or dangerous materials into drainage systems. Remove waste materials from Project site and dispose of lawfully.

F. Maintain cleaning until the Site, or portion thereof, is accepted by the Owner.

G. Timing: Schedule final cleaning as approved by the Owner's Representative to enable the Owner to accept a completely clean Project.

END OF SECTION 01 74 00

SECTION 01 77 00
CLOSEOUT PROCEDURES

PART 1 GENERAL

1.01 SUMMARY

A. Section Includes:

1. Closeout Procedures
2. Inspection Procedures

B. Related Sections:

1. Division 01 Sections - General Requirements
2. Section 01 74 00 - Cleaning and Waste Management
3. Section 01 78 39 - Project Record Documents

1.02 DEFINITIONS:

A. Closeout is hereby defined to include general requirements near end of Contract Time, in preparation for final acceptance, Final Payment, normal termination of Contract, occupancy by the Owner, and similar actions evidencing completion of the work. Specific requirements for individual units of work are specified in Sections of Divisions 02 through 33 and indicated on the Drawings. Time of closeout is directly related to "Substantial Completion" and, therefore, may be either a single time period for entire work or a series of time periods for individual parts of the work which have been certified as substantially complete at different dates. That time variation (if any) shall be applicable to other provisions of this Section.

1.03 PREREQUISITES TO SUBSTANTIAL COMPLETION

A. General: Prior to requesting Architect's inspection for certification of Substantial Completion (for either entire work or portions thereof), the Contractor shall complete the following and list known exceptions in request:

1. In progress payment request, coincident with or first following date claimed, show either 100 percent completion for portion of work claimed as "substantially complete", or list incomplete items, value of incompletion, and reason for being incomplete.
2. Include supporting documentation for completion as indicated in these Contract Documents.
3. Submit a statement showing accounting of changes to Contract Sum.
4. Prepare, submit, and complete a Punch List in accordance with General Conditions. This must be completed before the Architect will schedule inspection.
5. Advise the Owner of pending insurance changeover requirements.
6. Submit specific warranties, workmanship/maintenance bonds, maintenance agreements, final certifications, and similar Documents.
7. Obtain and submit releases enabling the Owner's full and unrestricted use of the work and access to services and utilities including, where required, Occupancy Permits, Operating Certificates, Waivers of Lien, and similar releases.
8. Submit record drawings, maintenance manuals, and similar final record information.
9. Deliver tools, spare parts, extra material stocks, and similar physical items to the Owner.
10. Discontinue (or change over) and remove from Project site, temporary facilities and services, along with construction tools and facilities, mock-ups, and similar elements.

11. Complete final cleaning-up requirements, including touch-up painting of marred surfaces.

12. Touch-up and otherwise repair and restore marred, exposed finishes.

1.04 INSPECTION PROCEDURES

A. Upon receipt of Contractor's request, the Owner's representative will either proceed with inspection or advise Contractor of prerequisites not fulfilled. Following initial inspection, the Architect will either prepare certificate of substantial completion, or advise Contractor of work which must be performed prior to issuance of certificate, and repeat inspection when requested and assured that work has been substantially completed. Results of completed inspection will form initial "Punch-List" for final acceptance.

1.05 PREREQUISITES TO FINAL ACCEPTANCE

A. General: Prior to requesting Architect's final inspection for certification of final acceptance and Final Payment, as required by General Conditions, complete the following and list known exceptions (if any) in request:

1. Submit Final Payment Request with final releases, Waivers of Liens, and supporting documentation not previously submitted and accepted. Include Certificates of Insurance for products and completed operations where required.

2. Submit updated final statement, accounting for additional (final) changes to Contract Sum.

3. Submit certified copy of Architect's final Punch-List of itemized work to be completed or corrected, stating that each item has been completed or otherwise resolved for acceptance, endorsed, and dated by Architect.

4. Submit consent of surety.

5. Revise and resubmit evidence of final, continuing insurance coverage complying with insurance requirements.

1.06 REINSPECTION PROCEDURE

A. Upon receipt of the General Contractor's notice that the work has been completed, including Punch-List items resulting from earlier inspections, and excepting incomplete items delayed because of acceptable circumstances, Architect will reinspect the work. Upon completion of reinspection, Architect will either prepare Certificate of Final Acceptance or advise Contractor of work not completed or obligation not fulfilled as required for final acceptance. If necessary, procedure will be repeated.

1.07 RECORD DOCUMENT SUBMITTALS

A. General: Specific requirements for record documents are indicated in individual Sections of the Specifications. Other requirements are indicated in General Conditions. General submittal requirements are indicated in "Submittals" Sections. Do not use record documents for construction purposes. Protect from deterioration and loss in secure, fire-resistive location. Provide access to record documents for Architect's reference during normal working hours.

B. Record Drawings: Contractor shall maintain in white-print set (blue-line or black-line) Contract Drawings and shop drawings in clean, undamaged condition, with mark-up of actual installations varying substantially from the work as originally shown. Mark whichever Drawing is most capable of showing "field" condition fully and accurately. However, where shop drawings are used for mark-up, record a cross-reference at corresponding location on working Drawings. Mark with red erasable pencil and, where feasible, use other colors to distinguish between variations in separate categories of work. Mark-up new information which is

recognized to be of importance to the Owner, but was, for some reason, not shown on either Contract Drawings or Shop Drawings. Give particular attention to concealed work that would be difficult to measure and record at a later date. Note related change order numbers where applicable. Organize record drawing sheets into manageable sets, bind with durable paper cover sheets, and print suitable titles, dates, and other identification on cover of each set.

C. Record Specifications: The Contractor shall maintain one copy of Specifications, including Addenda, Change Orders, and similar modifications issued in printed form during construction, and mark-up variations (of substance) in actual work in comparison with text of Specifications and modifications as issued. Give particular attention to substitutions, selection of option, and similar information on work where it is concealed or cannot otherwise be readily discerned at a later date by direct observation. Note related record drawing information and product data, where applicable. Upon completion of mark-up, submit to Architect for the Owner's records.

D. Maintenance Manuals: Organize maintenance-and-operating manual information into suitable sets of manageable size and bind into individual binders properly identified and indexed (thumb-tabbed). Include emergency instructions, spare parts listing, copies of warranties, wiring diagrams, recommended "turn-around" cycles, inspection procedures, shop drawings, product data, and similar applicable information. Bind each manual of each set in a heavy-duty three-ring vinyl-covered binder, and include pocket folders for folded sheet information. Mark identification on both front and spine of each binder.

1. Submit four (4) complete copies of each manual to the Architect for approval.

PART 2 PRODUCTS

Not Used

PART 3 EXECUTION

3.01 CLOSEOUT PROCEDURES

A. General Operating/Maintenance Instruction: The Contractor shall arrange for each installer of work requiring continuing maintenance to meet with Owner personnel at proper site to provide basic instruction needed for proper maintenance of entire work. Include instructions by manufacturer's representatives where installers are not expert in the required procedures. Review maintenance manuals, record documentation, tools, spare parts and materials, identification system, hazards, cleaning, and similar procedures and facilities. Review maintenance and operations in relation with applicable warranties, agreements to maintain, bonds, and similar continuing commitments.

3.02 FINAL CLEANING

A. General: Special cleaning for specific units of work is specified in sections of Divisions 02 through 33. General cleaning during progress of work is specified in General Conditions and as temporary services in "Special Conditions" Section of this Division. Provide final cleaning of the work, at time indicated, consisting of cleaning each surface or unit of work to normal "clean" condition expected for a first-class building cleaning and maintenance program. Comply with manufacturer's instructions for cleaning operations.

1. Where extra materials of value remain after completion of associated work and have become the Owner's property, dispose of these to the Owner's best advantage as directed.

B. Refer to Section 01 74 00 of these Specifications for additional cleaning requirements.

END OF SECTION 01 77 00

SECTION 01 78 23

OPERATING AND MAINTENANCE DATA

PART 1 GENERAL

1.01 SUMMARY

A. Section Includes:

1. This Section specifies the administrative requirements, procedural obligations, terms and conditions and general requirements related to the preparation and submittal of instruction manuals covering the materials installed, care, preservation and maintenance of products, finishes, equipment and systems.

B. Related Sections:

1. Special operating and maintenance data requirements for specific equipment or building operating systems are included in the appropriate Specifications Sections of Divisions 02 through 33.

2. Preparation of Shop Drawings and Product Data are included in Specification Section 01 33 00, "Submittals and Substitutions".

3. General requirements for submittal of Project Record Documents are included in Section 01 78 39, "Project Record Documents"

1.02 SUBMITTALS

A. Submittal Schedule: Comply with the following schedule for submittal of operating and maintenance manuals:

1. Submit two (2) copies of the first and subsequent drafts of each manual for review. Include a complete index and table of contents for each volume. One (1) copy will be returned within 45 days of receipt with comments. The first draft shall be at least 95% complete. Provide four (4) copies of FINAL manuals prior to commencement of training; these manuals shall be utilized as instructional text during the building orientation and training processes.

B. Form of Submittal: Manuals should be prepared in the form of an instructional manual for use by the Owner's operating personnel. The information should be bound as follows:

1. Binders: For each manual, provide heavy-gauge, commercial quality, vinyl hanging VUE presentation binders in 3" capacity sized to receive 8-1/2" by 11" paper. Binder color shall be white.

a. Identify each binder on the spine with the typed or printed title "OPERATION AND MAINTENANCE MANUAL", project name and subject matter covered.

b. Indicate the volume number for multiple volume sets of manuals.

2. Dividers: Manual contents shall be organized and divided by specification divisions using index maker dividers.

3. Protective Plastic Jackets: Provide protective transparent plastic jackets designed to enclose diagnostic software for computerized electronic equipment.

4. Text Material: Where written material is required as part of the manual, use the manufacturer's standard printed material.

5. Drawings: Where drawings or diagrams are required as part of the manual, provide protective plastic jackets for the drawings and bind in with the text.

a. Where oversize drawings are necessary, fold the drawings to the same size as the text pages and use as a foldout.

b. If drawings are too large to be used practically as a foldout, place the drawing, neatly folded, in the front or rear pocket of the binder. Insert a typewritten page indicating the drawing title, description of contents and drawing location at the appropriate location in the manual.

1.03 GENERAL MANUAL CONTENT

A. In each manual, include information specified in the individual Specification Section and the following information for each major component of building equipment and its controls:

1. General system or equipment description.
2. Design factors and assumptions.
3. Copies of approved shop drawings, product data, installation instructions and setup/calibration procedures.
4. Load and performance testing reports including equipment and system startup/performance documentation.
5. Fire/flame spread test certificates.
6. System or equipment identification, including:
   a. Name of manufacturer
   b. Model number
   c. Serial number
7. Standard operating instructions.
8. Emergency operating instructions.
9. Wiring diagrams including color coding, labeling and terminal designations.
10. Inspection and test procedures.
11. Detailed preventative maintenance procedures, frequencies and special tool requirements.
12. Operator trouble-shooting guide.
13. Precautions against improper use and maintenance.
14. Copies of warranties, including extended warranty options.
15. General owners operating/service manual.
16. Factory service manuals, including repair instructions and illustrated parts listing.
17. Electronic copies of operating system software (3.5 in. diskettes or CD-ROM).
18. Material safety data sheets.
19. Sources of required maintenance materials repair/replacement parts and related services.
20. Copies of inspections and certifications by governing authorities.

B. Manual Index: Organize each manual into separate Sections for each piece of related equipment. As a minimum each manual shall contain a title page, a table of contents, copies of Product Data, supplemented by drawings and written text, and copies of each warranty, bond and service contract proposal.

C. Title Page: Provide a title page as the first sheet of each manual. Provide the following information.

1. Subject matter covered by the manual.

2. Name and number of the Contract.

3. Date of submittal.

4. Name, address, and telephone number of the Contractor and Subcontractor.

5. Name and address of the Architect/Engineer.

6. Cross reference to related systems in other operating and maintenance manuals.

D. General Table of Contents: After the Title Page, include a typewritten table of contents for each volume (Divisions 02 through 33 inclusive), arranged according to the specification format.

E. General Information: Provide a general information Section immediately following the Table of Contents, listing by Specification Section each major product included in the manual, identified by product name. Under each product, list the name, address, telephone number, and point of contact of the Subcontractor or installer, and the maintenance contractor. Clearly delineate the extent of responsibility of each of these entities. In addition, list a local source for replacement parts and equipment.

F. Product Data: Where manufacturer's standard printed data is included in the manuals, include only sheets that are pertinent to the part or product installed. Mark each sheet to identify each part or product included in the installation. Where more than one item in a tabular format is included, identify each item, using appropriate references from the Contract Documents. Identify data that is applicable to the installation and delete references to information that is not applicable.

1. Manufacturer's Data: Provide complete information on architectural products, including the following, as applicable:

   a. Manufacturer's Catalog Number

   b. Size

   c. Material Composition

   d. Color

   e. Texture

   f. Re-ordering Information for Specially Manufactured Products

2. Care and Maintenance Instructions: Provide information on care and maintenance, including manufacturer's recommendations for types of cleaning agents to be used and methods of cleaning. Provide information regarding cleaning agents and methods that could prove detrimental to the product. Include manufacturer's recommended schedule for cleaning and maintenance.

3. Color Schedules: Provide information showing manufacturer's color name and catalog number for all exposed finishes, including paint, carpet, wallcoverings, and other finish materials.

4. Moisture-Protection and Weather-Exposed Products: Provide complete manufacturer's data with instructions on inspection, maintenance and repair of products exposed to the weather or designed for moisture-protection purposes.

   a. Manufacturer's Data: Provide manufacturer's data giving detailed information, including the following, as applicable:

      1) Applicable standards

      2) Chemical composition

      3) Installation details

      4) Inspection procedures

5) Maintenance information

6) Repair procedures

G. Equipment and Systems: Provide the following information for each piece of equipment, each building operating system, and each electric or electronic system.

1. Description: Provide a complete description of each unit and related component parts, including the following:

   a. Equipment or system function

   b. Operating characteristics

   c. Limiting conditions

   d. Performance curves

   e. Engineering data and tests

   f. Complete nomenclatures and number of replacement parts

2. Manufacturer's Information: For each manufacturer of a component part or piece of equipment, provide the following:

   a. Printed operating and maintenance instructions.

   b. Assembly drawings and diagrams required for maintenance.

   c. Recommended parts inventory listing.

3. Provide information detailing essential maintenance procedures, including the following:

   a. Routine operations

   b. Trouble-shooting guide

   c. Disassembly, repair and reassembly

   d. Alignment, adjusting and checking

4. Operating Procedures: Provide information on equipment and system operating procedures, including the following:

   a. Start-up procedures

   b. Equipment or system break-in

   c. Routine and normal operating instructions

   d. Regulation and control procedures

   e. Instructions on stopping

   f. Shut-down and emergency instructions

   g. Day and night operating instructions

   h. Summer and winter operating instructions

   i. Required sequences for pneumatic, electric, electronic or direct digital control systems

   j. Special operating instructions

5. Servicing Schedule: Provide a schedule of routine servicing and lubrication requirements, including a list of required lubricants for equipment with moving parts.

6. Controls: Provide a comprehensive description of the sequence of operation and as-installed control diagrams by the control manufacturer for systems requiring controls.

7. Drawings: Provide copies of each Contractor/Subcontractor set of coordination drawings.

8. Valve Tags: Provide charts of valve tag numbers with the room number location and function of each valve. Valve tag locations shall be clearly indicated on the set of record "As-Built" drawings.

9. Circuit Directories: For electric and electronic systems, provide complete circuit directories of panelboards, including the following:

   a. Electric power

   b. Lighting

   c. Communications

   d. Fire Alarm

H. Written Test: Where manufacturer's standard printed data is not available, and information is necessary for proper operation and maintenance of equipment or systems, or it is necessary to provide additional information to supplement data included in the manual, prepare written text to provide necessary information. Organize the text in a consistent format under separate headings for different procedures. Where necessary, provide a logical sequence of instruction for each operating or maintenance procedure.

I. Drawings: Provide specially prepared drawings where necessary to supplement manufacturer's printed data to illustrate the relationship of component parts of equipment or systems, or to provide control or flow diagrams. Coordinate these drawings with information contained in Project Record Drawings to assure correct illustration of the completed installation. Do not use original Project Record Documents as part of the Operating and Maintenance Manuals.

J. Warranties, Bonds, and Service Contracts: Provide a photocopy of each warranty, bond, or service contract in the appropriate manual for the information of the Owner's operating personnel. Provide written data outlining procedures to be followed in the event of product failure including the return policies/procedures. List circumstances and conditions that would affect validly of the warranty or bond. Commencement and expiration dates shall be clearly indicated.

K. Provide complete information in the manual on products specified in Divisions 02 through 33.

1.04 TRAINING OF OPERATING AND MAINTENANCE PERSONNEL

A. Prior to final inspection, instruct the hotel personnel in operation, adjustment, and maintenance of products, equipment and systems.

   1. Use operation and maintenance manuals for each piece of equipment or system as the basis of instruction. Review contents in detail to explain all aspects of operation and maintenance.

   2. Refer to Specification Section 01 79 00, "Training", for detailed training requirements

1.05 OPERATING AND MAINTENANCE MANUALS

A. Submit copies of each manual, in the form specified, to the Architect for distribution.

   1. Refer to individual Specification Sections and other paragraphs within this Section for additional requirements.

B. Manuals should be organized into separate and distinct volumes (binders) as described hereafter:

   1. "SITE WORK"

      a. Asphalt Concrete Pavement

      b. Tack and Prime Coat

c. Concrete Curbs and Sidewalks
d. Pavement Markings
e. Guide Rail
f. Termite Control
g. Traffic Signage

2. "SITE WORK UTILITIES"
   a. Water and Sanitary Sewer Facilities
   b. Drainage Structures
   c. Underdrains
   d. Electrical Power Service
   e. Gas Utility
3. "LANDSCAPE AND SITE IMPROVEMENTS"
   a. Soil Preparation and Seeding
   b. Trees, Plants, and Ground Cover
   c. Site and Street Furnishings
4. "BUILDINGS AND STRUCTURES"
   a. Concrete
   b. Unit Masonry
   c. Metals
   d. Woods and Plastics
   e. Thermal and Moisture Protection
   f. Doors and Windows
   g. Finishes
   h. Specialties
   i. Fixtures, Furnishings, and Equipment
5. "WAYFINDING"
   a. Exterior Signage
6. "HYDRAULIC ELEVATORS"
7. "MECHANICAL, HVAC"
   a. Basic Materials and Methods
   b. Piping and Specialties
   c. Insulation
   d. Pumping
   e. Refrigeration
   f. Air Handling and Distribution
   g. Automatic Temperature Control
   h. Testing/Adjusting/Balancing

8. "MECHANICAL, PLUMBING"
    a. Basic Materials and Methods
    b. Piping and Specialties
    c. Insulation
    d. Fixtures/Trim/Accessories
    e. Water Heaters
    f. In-Line Circulating Pumps
    g. Water Softening Equipment
9. "FIRE SPRINKLERS"
    a. Basic Materials and Methods
    b. Standpipe and Hose Systems
    c. Fire Pumps
    d. Dry Pipe Sprinkler Systems
    e. Wet Pipe Sprinkler Systems
10. "ELECTRICAL"
    a. Basic Materials and Methods
    b. Service and Distribution
        1) Service Entrance
        2) Switchboards
        3) Disconnects
        4) Grounding
        5) Transformers
        6) Panelboards
        7) Overcurrent Protective Devices
        8) Contactors
        9) Voltage Surge Suppression
        10) Heat Tracing
    c. Lighting
        1) Interior and Exterior Luminaries, Lamps and Accessories
        2) Emergency Lighting
        3) Lighting Control Equipment
11. "SOUND SYSTEMS"
12. "COMMUNICATIONS"
    a. Voice and Data
    b. Television Distribution System
    c. Security Intercom System
13. "FIRE ALARM SYSTEM"

1.06 MAINTENANCE OF DOCUMENTS AND SAMPLES

A. Store Record Documents and Samples in the field office apart from Contract Documents used for construction. Do not permit Project Record Documents to be used for construction purposes. Maintain Record Documents in good order and in a clean, dry, legible condition. Make Documents and Samples available at all times for inspection by the Owner's Representative or Architect.

PART 2 PRODUCTS

Not Used

PART 3 EXECUTION

Not Used

END OF SECTION 01 78 23

SECTION 01 78 36

WARRANTIES

PART 1 GENERAL

1.01 SUMMARY

A. Section Includes:

1. This Section specifies general administrative and procedural requirements for warranties, guarantees, and bonds required by the Contract Documents, including manufacturers' standard warranties on products and special warranties. Warranties required by the Specifications, Divisions 02 through 33, shall not deprive the Owner of other rights the Owner may have under other provisions of the Contract Documents and shall be in addition to other warranties made by the Contractor under the Contract Documents.

2. Disclaimers and Limitations: Manufacturer's disclaimers and limitations on product warranties do not relieve the Contractor of the warranty on the Work that incorporates the products, nor does it relieve suppliers, manufacturers, and Subcontractors required to countersign special warranties with the Contractor.

B. Related Sections:

1. Additional requirements as specified in General Conditions.

2. General closeout requirements are included in Section 01 77 00 Contract Closeout.

3. Warranties, including requirements for certifications for the work and products and installation that are specified to be warranted, are stated in the individual Specification Sections of Divisions 02 through 33.

4. Specific certification requirements and other commitments and agreements for continuing services to the Owner are specified elsewhere in the Contract Documents.

1.02 DEFINITIONS

A. Categories of Specific Warranties: Warranties on the work are in several categories, including those of General Conditions, and including (but not necessarily limited to) the following specific categories related to individual units of work specified in sections of Divisions 02 through 33 of these Specifications.

1. Special Project Warranty (Guarantee): A warranty specifically written and signed by Contractor for a defined portion of the Work and, where required, countersigned by Subcontractor, installer, manufacturer, or other entity engaged by Contractor.

2. Specified Product Warranty: A warranty which is required by Contract Documents, to be provided for a manufactured product incorporated into the Work, regardless of whether manufacturer has published a similar warranty without regard for specific incorporation of product into the Work, or has written and executed a special project warranty as a direct result of Contract Documents requirements.

3. Coincidental Product Warranty: A warranty which is not specifically required by Contract Documents (other than as specified in this Section), but which is available on a product incorporated into the work by virtue of the fact that manufacturer of product has published warranty in connection with purchases and uses of product without regard for specific applications, except as otherwise limited by terms of warranty.

1.03 SUBMITTALS

A. If the date of Substantial Completion designates a commencement date for warranties other than the proposed date of Substantial Completion for the Work, or a designated portion of the Work, the Contractor shall submit written warranties upon request of the Owner, in accordance with this Section.

B. When a designated portion of the Work is completed and occupied or used by the Owner, by separate agreement with the Contractor during the construction period, properly executed warranties should be submitted to the Owner within 15 days of completion of that designated portion of the Work.

C. When a special warranty is required to be executed by the Contractor, or the Contractor and a Subcontractor, supplier or manufacturer, a written document should be prepared which contains appropriate terms and identification, ready for execution by the required parties. Draft copies should be submitted for approval prior to final execution.

D. Refer to individual Sections of Divisions 02 through 33 for specific content requirements, and particular requirements for submittal of special warranties.

E. Final Form of Submittal: Prior to certification for Substantial Completion, compile two original copies of each approved warranty and bond properly executed by the Contractor, or by the Contractor, Subcontractor, supplier, or manufacturer. Organize the warranty documents into an orderly sequence based on the table of contents of the Specifications.

1. Bind warranties and bonds in heavy-duty, commercial quality, durable 3-ring vinyl covered loose-leaf binders.

F. Provide additional photocopies of each warranty for inclusion in the appropriate volume of the Operating and Maintenance Manuals.

1.04 QUALITY ASSURANCE

A. Disclaimers and Limitations: Manufacturer's disclaimers and limitations on product warranties do not relieve the Contractor of the warranty on the Work that incorporates the products. Manufacturer's disclaimers and limitations on product warranties do not relieve suppliers, manufacturers, and Subcontractors required to countersign special warranties with the Contractor.

1.05 WARRANTY REQUIREMENTS

A. Conform to General Conditions, Article 37, and the following:

1. Related Damages and Losses: When correcting warranted Work that has failed, remove and replace other Work that has been damaged as a result of such failure or that must be removed and replaced to provide access for correction of warranted Work.

2. Reinstatement of Warranty: When Work covered by a warranty has failed and been corrected by replacement or rebuilding, reinstate the warranty by written endorsement. The reinstated warranty shall be equal to the original warranty with date of revised warranty beginning from date of repair.

3. Replacement Cost: Upon determination that Work covered by a warranty has failed, replace or rebuild the Work to an acceptable condition complying with requirements of Contract Documents. The Contractor is responsible for the cost of replacing or rebuilding defective Work regardless of whether the Owner has benefited from use of the Work through a portion of its anticipated useful service life.

B. Owner's Recourse: Written warranties made to the Owner are in addition to implied warranties, and shall not limit the duties, obligations, right and remedies otherwise available under the law, nor shall warranty periods be interpreted as limitations on time in which the Owner can enforce such other duties, obligations, rights, or remedies.

C. Rejection of Warranties: The Owner reserves the right to reject warranties and to limit selections to products with warranties not in conflict with requirements of the Contract Documents.

D. The Owner reserves the right to refuse to accept Work for the Project where a special warranty, certification, or similar commitment is required on such Work or part of the Work, until evidence is presented that entities required to countersign such commitments are willing to do so.

E. In the event that the Owner or any of its agents takes possession of the Work or any portion thereof, pursuant to the Contract Provisions, warranties shall not start until such work, or portions thereof, are separately and finally accepted. Warranty coverage for system components shall not become effective until the Owner makes final acceptance of the system or a separate portion of the system containing the component. All affected warranties shall continue in force for a period of at least one (1) year from the date of final acceptance of the work or any portion thereof.

PART 2 PRODUCTS

Not Used

PART 3 EXECUTION

Not Used

END OF SECTION 01 78 36

SECTION 01 78 39
PROJECT RECORD DOCUMENTS

PART 1 GENERAL

1.01 SUMMARY

A. This Section specifies administrative and procedural requirements for Project Record Documents to be prepared and submitted by the General Contractor and subcontractors.

B. Project Record Documents required include:

1. Marked-up Copies of Contract Drawings
2. Marked-up Copies of Final Conforming Shop Drawings
3. Newly Prepared Drawings
4. Marked-up Copies of Specifications, Addenda, and Change Orders
5. Marked-up Final Conforming Product Data Submittals
6. Record Samples
7. Field Records for Variable and Concealed Conditions
8. Record Information on Work that is Recorded only Schematically
9. Operating and Maintenance Manuals for Work by General Contractor and subcontractors
10. Instruction Manuals Covering the Care, Preservation and Maintenance of Architectural Products and Finishes
11. Schedule of Finishes and Colors of Architectural Products
12. Warranties and Guarantees for Products Provided by General Contractor and subcontractors

C. Related Sections:

1. Specific record copy requirements that expand requirements of this Section are included in the individual Sections of Divisions 02 through 33.
2. Section 01 77 00 - Closeout Procedures: For general Project closeout requirements.
3. Section 01 33 00 - Submittals and Substitutions: For general requirements for submittal of Shop Drawings, Product Data and Project Record Documents.

1.02 SUBMITTALS

A. Submittal Schedule: Comply with the following schedule for submittal of operating and maintenance manuals:

1. Before Substantial Completion, when each installation that requires submittal of operating and maintenance manuals is nominally complete, submit two draft copies of each manual to the Architect for review. Include a complete index or table of contents of each manual.
2. After final inspection, make corrections or modifications to comply with the Architect's comments. Submit the specified number of copies of each approved manual to the Architect within fifteen days of receipt of the Architect's comments.

B. Form of Submittal: Prepare operating and maintenance manuals in the form of an instructional manual for use by the Owner's operating personnel. Organize into suitable sets of manageable size. Where possible, assemble instructions for similar equipment into a single binder.

1. Four (4) copies of manuals will be required.

3. Color Schedules: Provide information showing manufacturer's color name and catalog number for all exposed finishes, including paint, carpet, wallcoverings, and other finish materials.

D. Organize maintenance-and-operating manual information into suitable sets of manageable size, and bind into individual binders properly identified and indesed (thumb-tabbed). Include emergency instructions, spare parts listing, copies of warranties, wiring diagrams, recommended "turn-around" cycles, inspection procedures, shop drawings, product data, and similar applicable information. Bind each manual at each set in a heavy-duty two- or three-ring vinyl-covered binder, and include pocket folders for folded sheet information. Mark identification on both front and spine of each binder.

1.04 RECORD DRAWINGS

A. General: Refer to Section 01 77 00 for requirements.

B. Responsibility for Markup: Where feasible, the individual or entity who obtained record data, whether the individual or entity is the installer, Subcontractor, or similar entity, is required to prepare the mark-up on Record Drawings.

C. At time of Substantial Completion, submit record drawings to Architect for Owner's records. Organize into sets, bind and label sets for Owner's continued use.

1.05 RECORD SPECIFICATIONS

A. General: Refer to Section 01 77 00 for requirements.

B. The Contractor is responsible for marking-up Sections that contain its own Work.

1. The Contractor for General Construction is responsible for submitting the complete set of record Specifications as specified.

1.06 RECORD PRODUCT DATA

A. During the construction period, maintain one copy of each Product Data submittal for Project Record Document purposes.

1. Mark Product Data to indicate the actual product installation where installation varies substantially from that indicated in Product Data submitted. Include significant changes in the product delivered to the site and changes in manufacturer's instructions and recommendations for installation.

2. Give particular attention to information on concealed products and installations that cannot be readily identified and recorded later.

3. Note related Change Orders and mark-up of record drawings, where applicable.

4. Upon completion of mark-up, submit a complete set of record product data to the Architect for the Owner's records.

5. Where record Product Data is required as part of maintenance manuals, submit marked-up Product Data as an insert in the manual instead of submittal as record Product Data.

1.07 RECORD SAMPLE SUBMITTAL

A. Immediately prior to date of Substantial Completion, the Contractor shall meet with the Architect and, if desired, the Owner's personnel at the site to determine which of the samples maintained during the construction period shall be transmitted to the Owner for record purposes. Comply with the Architect's instructions for packaging, identification marking, and delivery to Owner's sample storage space. Dispose of other samples in manner specified for disposal of surplus and waste materials.

SECTION 01 78 43
SPARE PARTS

PART 1 GENERAL

1.01 SUMMARY

A. Section Includes:

1. Spare Parts and Materials

B. Related Sections:

1. Refer to individual sections for items listed herein, as well as other requirements.

PART 2 PRODUCTS

2.01 EXTRA MATERIALS - GENERAL

A. At the time of building acceptance, deliver to the Owner the following extra materials. Deliver in original unopened cartons or containers (except paint) with each item properly identified.

2.02 SEALANT - 07 92 00

A. Furnish extra sealant materials from same production run as the materials applied in the quantities described below. Package materials in unopened, factory-sealed containers with labels describing contents.

1. Quantity: Furnish one unused tube of each type and color of exterior sealant applied.

2.03 ACOUSTIC TILE CEILINGS - 09 51 23

A. Replacement stock amounting to one full box (minimum 12 tiles) of each type.

2.04 RESILIENT FLOORING - 09 65 00

A. Furnish extra materials matching products installed as described below, packaged with protective covering for storage and identified with labels clearly describing contents.

1. Furnish not less than one box of each class, wearing surface, color, pattern, and size of resilient floor tile installed.

2.05 PAINT AND HIGH PERFORMANCE COATINGS - 09 90 00 / 09 60 00

A. Furnish extra paint materials from the same production run as the materials applied in the quantities described below. Package paint materials in unopened, factory-sealed containers for storage.

1. Quantity: Furnish the Owner with two gallons of each material and color applied in addition to any leftover amounts.

2. All cans shall be labeled with Finish Index number.

2.06 PLUMBING FIXTURES - 22 40 00

A. Shower Heads: One units of each type.

B. Faucet Sets: One complete set.

C. Toilet Seats: Furnish quantity of identical units not less than 1 of each type installed.

2.07 PLUMBING SPECIALTIES - 22 40 00.01

A. Operating key handles: Furnish one extra for each key-operated hose bibb and hydrant installed.

2.08 DUCT ACCESSORIES - 23 33 00

A. Fusible Links: Furnish quantity equal to 1 of each type installed.

2.09 POWER VENTILATORS (23 34 23)

A. Furnish one set of belts for each belt-driven fan that match products installed, are packaged with protective covering for storage, and are identified with labels clearly describing contents.

2.10 ENCLOSED CONTROLLERS - 26 29 13

A. Furnish extra materials described below that match products installed, are packaged with protective covering for storage, and are identified with labels describing contents:

1. Spare Fuses and Incandescent Indicating Lamps: Furnish one set of three for each kind.

2.11 INTERIOR LIGHTING 26 51 00

A. Furnish extra materials described below that match products installed and that are packaged with protective covering for storage and identified with labels describing contents:

1. Lamps: Two of each rating installed of the following types (Refer the Light Fixture Schedule located in the Appendix):

a. Incandescent

b. Fluorescent

c. Compact Fluorescent

d. Metal Halide

2.12 EXTERIOR LIGHTING - 26 56 00

A. Furnish extra materials described below that are packaged with protective covering for storage and identified with labels describing contents.

1. Lamps: Two of each rating installed of the following types (Refer the Light Fixture Schedule located in the Appendix):

a. Incandescent.

b. Fluorescent

c. Compact Fluorescent

d. Metal Halide

PART 3 EXECUTION

Not Used

END OF SECTION 01 78 43

SECTION 01 79 00

DEMONSTRATION AND TRAINING

PART 1 GENERAL

1.01 SUMMARY

A. Section Includes:

1. This Section specifies the administrative requirements, procedural obligations, terms and conditions and training requirements related to instructing the facility engineering personnel in the proper care, preservation, operations and maintenance of materials, finishes, equipment and systems.

   a. Preparation and submittal of instructor qualifications, training schedules, and agendas for various building materials, components, systems and equipment.

   b. Instruction of the Owner's personnel and adjunct organizations in the proper operation and maintenance of all building materials, components, systems and equipment.

B. Related Sections:

1. Special operating and maintenance data requirements for specific equipment or building operating systems are included in the appropriate Specification Sections of Divisions 02 through 33.

2. Preparation of Shop Drawings and Product Data are included in Specification Section 01 33 00, Submittals and Substitutions.

3. General closeout requirements are included in Specification Section 01 77 00. Contract Closeout.

4. General requirements for submittal of Project Record Documents are included in Section 01 78 39, Project Record Documents.

5. Additional training requirements for building systems and/or equipment are delineated in the appropriate Specification Sections, Divisions 02 through 33.

6. Where training manuals include information on work installed by the Contractor and their Subcontractors, the Contractor shall be responsible for the preparation of the manuals, including collection, collation and binding of the material and submittal of data as specified.

1.02 QUALITY ASSURANCE

A. The status of training deliverables shall be an integral part of the Contractor's coordination process. The Contractor shall meet with the Owner as required, to discuss progress-to-date, deficiencies and non-compliance issues.

1.03 TRAINING MANUALS

A. The completed FINAL VERSION of the approved Operation & Maintenance Manuals and the redlined set of the record "as-built" drawings shall be used as the basis of instruction. The Contractor is not responsible for providing additional copies of these documents for training purposes.

1.04 TRAINING HOURS

A. Training shall be conducted during normal working hours. All training shall be completed prior to the public opening of the hotel property.

PART 2 PRODUCTS

Not Used

PART 3 EXECUTION

3.01 TRAINING OF FACILITY ENGINEERING, OPERATING AND MAINTENANCE PERSONNEL

A. Instruct the hotel's personnel in operation, adjustment, and maintenance of all materials, components, equipment and systems.

1. Use the Operation and Maintenance Manuals and the Record "As-Built" Drawings for each piece of equipment or system as the basis of instruction. Review contents in detail to explain all aspects of installation, care and preservation, operation, preventive maintenance, service, and replacement.

2. The detailed review of the materials, components, systems and equipment shall include as minimum the following items:

a. Materials, components, systems and equipment

b. Safety precautions and procedures

c. Installation

d. Operational features and functions

e. Operational testing and diagnostics

f. Preventive and predictive maintenance

g. Service: Repair and replacement

h. Operation and Maintenance manual content

i. Commissioning: Testing, adjusting, calibration and balancing

j. Contractor furnished spare parts and extra materials

k. Recommended "spare parts" inventory not furnished by Contractor

l. Specialty tool requirements

m. Lubricants

n. Fuels

o. Identification systems

p. Automatic/manual control systems

q. Hazards/Material Safety Data Sheets

r. Cleaning

s. Procurement of replacement parts

t. Warranty reviews including terms and conditions, points of contact, return material procedures, effective date, extended warranty options

u. Maintenance agreements and similar continuing commitments

v. Record "As-Built" Drawings

3. As part of the operations portion of the training session, demonstrate all operational features and functions.

4. Refer to other specification Sections for additional training requirements associated with engineering, operating and maintenance of various systems/equipment.

B. Provide a combination of classroom, field and factory training classes which includes as a minimum the following curricula requirements as indicated hereafter:

1. SITE WORK UTILITIES: one 1-hour class

a. Water, Storm, and Sanitary Sewer Facilities
b. Drainage Structures
c. Underdrains
d. Electrical Power Service
e. Gas Utilities

2. BUILDINGS AND STRUCTURES: one 1-hour class
   a. Concrete
   b. Unit Masonry
   c. Metals
   d. Woods and Plastics
   e. Thermal and Moisture Protection
   f. Doors and Windows
   g. Finishes
   h. Specialties
   i. Fixtures, Furnishings and Equipment
3. MECHANICAL, HVAC: one 1-hour class
   a. Basic Materials and Methods
   b. Piping and Specialties
   c. Insulation
   d. Pumping
   e. Refrigeration
   f. Air Handling and Distribution
   g. Pool Dehumidification
   h. Automatic Temperature Controls
   i. Testing/Adjusting/Balancing
4. MECHANICAL, PLUMBING: one 1-hour class
   a. Basic Materials and Methods
   b. Piping and Specialties
   c. Insulation
   d. Pumping
   e. Fixtures, Trim and Accessories
   f. Domestic Water Heaters
   g. Water Softening
5. ELECTRICAL: one 1-hour class
   a. Basic Materials and Methods
   b. Service and Distribution
   c. Service Entrance

d. Switchboards
e. Disconnects
f. Grounding
g. Transformers
h. Panelboards
i. Overcurrent Protective Devices
j. Contactors
k. Voltage Surge Suppression
l. Testing
m. Lighting
n. Interior and Exterior Luminaries, Lamps and Accessories
o. Emergency Lighting
p. Heat Tracing

6. COMMUNICATION: one 1-hour class
   a. Voice and Data
   b. Television Distribution System
   c. Security Intercom System

END OF SECTION 01 79 00

SECTION 02 41 19

SELECTIVE STRUCTURE DEMOLITION

PART 1 GENERAL

1.01 SUMMARY

A. Section Includes:

1. Demolition and removal of selected portions of building or structure.
2. Demolition and removal of selected site elements.
3. Salvage of existing items to be reused or recycled.
4. Extent of selective demolition work is indicated on Drawings.
5. Removal of Work Specified Elsewhere:

B. Related Work Specified Elsewhere:

1. Cutting non-structural concrete floors and masonry walls for underground piping and ducts, and for above grade piping, ducts, and conduit is included with the work of the respective Mechanical and Electrical Divisions 22, 23 and 26 (Divisions 15 & 16) Specification Sections, unless noted otherwise on the Drawings or in the Specifications.
2. Remodeling construction work and patching is included within the respective Sections of Specifications, including removal of materials for reuse and incorporated into remodeling or new construction.
3. Relocation of pipes, conduits, ducts, other mechanical and electrical work are specified by respective trades.

C. Related Sections:

1. Section 01 11 00 - Summary of Work
2. Section 01 35 16 - Alteration Project Procedures
3. Section 01 50 00 – Temporary Facilities and Controls
4. Section 01 56 16 - Dust Barriers
5. Section 01 73 29 - Cutting and Patching

1.02 REFERENCES

A. American National Standards Institute (ANSI) Publications:

1. A10.6 "Safety Requirements for Demolition"

B. National Fire Protection Association (NFPA) Publications:

1. NFPA 241: "Standard for Safeguarding Construction, Alteration, and Demolition Operations, 2004 Edition"

C. Environmental Protection Agency (EPA)

1. EPA notification regulations

D. Resilient Floor Covering Institute (RFCI)

1. "Recommended Work Practices for the Removal of Resilient Floor Coverings" and Addendum.

1.03 DEFINITIONS

A. Remove: Detach items from existing construction and legally dispose of them off-site, unless indicated to be removed and salvaged or removed and reinstalled.

B. Remove and Salvage: Items indicated to be removed and salvaged remain the Owner's property. Detach, clean, and pack or crate items to protect against damage. Identify contents of containers and deliver to Owner's designated storage area.

C. Remove and Reinstall: Detach items indicated; clean, service, and otherwise prepare them for reuse; store and protect against damage. Reinstall items in the same locations or in locations indicated.

D. Existing to Remain: Protect construction indicated to remain against damage and soiling during selective demolition. When permitted by the Architect and Owner's Representative, items may be removed to a suitable, protected storage location during selective demolition and then cleaned and reinstalled in their original locations.

1.04 SUBMITTALS

A. General: Submit the following in accordance with Conditions of Contract and Division 01 Specification Sections:

B. Schedule: Submit schedule indicating proposed methods and sequence of operations for selective demolition work to the Architect and Owner's Representative for review prior to commencement of work. Include coordination for shut-off, capping, and continuation of utility services as required, together with details for dust and noise control protection.

1. Coordinate with the Owner's continuing occupation of portions of existing building, and surrounding facilities.

C. Inventory: After selective demolition is complete, submit a list of items that have been removed and salvaged.

D. Pre-demolition Photographs: Show existing conditions of adjoining construction and site improvements, including finish surfaces that might be misconstrued as damage caused by selective demolition operations.

1.05 QUALITY ASSURANCE

A. In addition to complying with all pertinent codes, each Contractor will also comply with the requirements of those insurance carriers providing coverage for the existing building and this work.

1. Comply with governing EPA notification regulations before beginning selective demolition. Comply with hauling disposal regulations of authorities having jurisdiction.

2. Comply with ANSI A10.6 and NFPA 241.

B. Contractor shall provide methods to ensure pollution control during the demolition period.

C. If unanticipated mechanical, electrical, or structural elements which conflict with intended function or design are encountered, investigate and measure both nature and extent of the conflict. Submit report to Architect in written, accurate detail. Pending receipt of directive from Architect, rearrange selective demolition schedule as necessary to continue overall job progress without delay.

1.06 PROJECT CONDITIONS

A. Owner will occupy portions of building immediately adjacent to selective demolition area. Conduct selective demolition so Owner's operations will not be disrupted.

B. Provide minimum of 72 hours advance notice to the Architect and Owner's Representative of demolition activities that will severely impact upon the Owner's normal operations.

C. Condition of Structures: The Owner assumes no responsibility for actual condition of items or structures to be demolished.

D. Partial Demolition and Removal: Items indicated to be removed but of salvageable value to Contractor may be removed from structure as work progresses unless indicated otherwise. Transport salvaged items from site as they are removed.

1. Under no circumstances will any persons connected with this Project use any adjacent property outside the property limits for the purpose of storing or selling demolition materials.

E. Protections: Provide temporary barricades and other forms of protection as required to protect the Owner's personnel and general public from injury due to selective demolition work.

1. Provide protective measures as required to provide free and safe passage of the Owner's personnel and general public to and from work area at all times.

2. Provide interior and exterior shoring, bracing, or support to prevent movement, settlement, or collapse of structure or element to be demolished and adjacent facilities or work to remain.

3. Protect from damage existing finish work that is to remain in place and becomes exposed during demolition operations.

4. Protect floors with suitable coverings when necessary. Use rubber-tired vehicles for conveying materials in building.

5. Provide temporary weather protection during interval between demolition and removal of existing construction on exterior surfaces, and installation of new construction to insure that no water leakage or damage occurs to structure or interior areas of existing building.

6. Temporary Fire Protection: There shall be one fire extinguisher for Class A fires, 2-1/1 gallon size, within 20 feet of any demolition work. All combustible waste removed continuously. No smoking allowed. No device above 180 degrees F. allowed.

7. Remove protections at completion of work.

8. Refer to Section 01 56 16 for additional Dust Barrier requirements.

F. Damages: Promptly repair damages caused to adjacent facilities by demolition work at no cost to the Building Owner or Tenant.

1.07 TRAFFIC

A. Conduct selective demolition operations and debris removal in a manner to ensure minimum interference with roads, streets, walks, and other adjacent occupied or used facilities.

B. Do not close, block or otherwise obstruct streets, walks or other occupied or used facilities without written permission from Owner and other authorities having jurisdiction. Provide alternate routes around closed or obstructed traffic ways if required by the Owner and other governing regulations.

1.08 EXPLOSIVES

A. Use of explosives will not be permitted.

1.09 UTILITY SERVICES

A. Maintain existing utilities indicated to remain, keep in service, and protect against damage during demolition operations.

B. Do not interrupt existing utilities serving occupied or used facilities, except when authorized in writing by the Owner's Representative. Provide temporary services during interruptions to existing utilities, as acceptable to the Owner's Representative.

1.10 ENVIRONMENTAL CONTROLS

A. Use temporary enclosures, and other suitable methods to limit dust and dirt rising and scattering in air to lowest practical level. Comply with governing regulations pertaining to environmental protection.

B. Do not use water when it may create hazardous or objectionable conditions such as ice, flooding, and pollution. Any water damage to portions of building to remain shall be repaired to original condition at not cost to the Owner.

PART 2 PRODUCTS

2.01 TEMPORARY DUST AND PROTECTION PARTITIONS

A. Dust partitions and Protection Partitions shall be constructed as described within the Contract Drawings and shall be provided in all locations necessary and as directed by the Owner, or as required for protection of existing adjacent finished surfaces, new construction, furniture, etc. Partitions and enclosures shall be erected prior to commencing demolition or alteration work and shall be removed as soon as the work is complete.

1. Refer to Section 01 56 16 for additional Dust Barrier requirements.

2.02 PROTECTION OF FINISHED ROOFS

A. Any work on the roof must involve the protection of surrounding roof work area as well as walk ways to the work areas. This protection, at minimum, shall be 2 inch thick rigid "Styrofoam" by Dow, covered with one layer of 5/8 inch plywood. Surfaces must be properly ballasted. See Drawings for additional details on protection of these items.

B. Set the layer of foam board onto the roof and butt tight. Tape joints to retain insulation in place. Lay plywood over the entire area. Stagger joints in the layer of insulation and fasten plywood at corners. Ballast plywood appropriately.

C. At completion of work completely remove protection. Restore roof to its original conditions acceptable to the Architect.

PART 3 EXECUTION

3.01 EXAMINATION

A. Prior to commencement of selective demolition work, inspect areas in which work will be performed. Photograph existing conditions to structure surfaces, equipment or to surrounding properties which could be misconstrued as damage resulting from selective demolition work; file with the Architect prior to starting work.

B. Verify that utilities have been disconnected and capped.

C. When unanticipated mechanical, electrical, or structural elements that conflict with intended function or design are encountered, investigate and measure the nature and extent of conflict. Promptly submit a written report to Architect.

3.02 PREPARATION

A. Provide interior and exterior shoring, bracing, or support to prevent movement, settlement or collapse of structures to be demolished and adjacent facilities to remain.

1. Cease operations and notify the Architect immediately if safety of structure appears to be endangered. Take precautions to support structure until determination is made for continuing operations.

B. Conduct selective demolition and debris-removal operations to ensure minimum interference with roads, streets, walks, walkways, and other adjacent occupied and used facilities.

1. Do not close or obstruct streets, walks, walkways, or other adjacent occupied or used facilities without permission from Owner and authorities having jurisdiction. Provide alternate routes around closed or obstructed traffic ways if required by governing regulations.

C. Cover and protect equipment and fixtures to remain from soiling or damage when demolition work is performed in rooms or areas from which such items have not been removed.

D. Erect and maintain dust-proof partitions and closures as required to prevent spread of dust or fumes to occupied portions of the building.

1. Where selective demolition occurs immediately adjacent to occupied portions of the building, construct dust-proof partitions of minimum 4" fire-retardant treated wood studs,

or metal studs, with self-extinguishing, low flame spread, reinforced plastic sheeting, or fire-retardant plywood.

a. Material identification labels must be printed on sheeting and fire-retardant treated wood markings must be visible.

2. Provide weatherproof closures for exterior openings resulting from demolition work.

E. Locate, identify, stub off and disconnect utility services that are not indicated to remain.

1. Provide by-pass connections as necessary to maintain continuity of service to occupied areas of building. Provide a minimum of two weeks advance notice to the Owner if shut-down of service is necessary during change-over.

F. Drain, purge, or otherwise remove, collect, and dispose of chemicals, gases, explosives, acids, flammables, or other dangerous materials before proceeding with selective demolition operations.

3.03 DEMOLITION

A. Perform selective demolition work in a systematic manner. Use such methods as required to complete work indicated on Drawings in accordance with demolition schedule and governing regulations.

1. Demolish concrete and masonry in small sections. Cut concrete and masonry at junctures with construction to remain using power-driven masonry saw or hand tools; do not use power-driven impact tools.

2. Locate demolition equipment throughout structure and promptly remove debris to avoid imposing excessive loads on supporting walls, floors or framing.

3. Provide services for effective air and water pollution controls as required by local authorities having jurisdiction.

4. For interior slabs on grade, use removal methods that will not crack or structurally disturb adjacent slabs or partitions. Use power saw where possible.

5. Completely fill below-grade areas and voids resulting from demolition work. Provide fill consisting of approved compacted material.

6. Remove floor coverings and adhesive according to recommendations of the Resilient Floor Covering Institute's (RFCI) "Recommended Work Practices for the Removal of Resilient Floor Coverings" and Addendum.

a. Remove residual adhesive and prepare substrate for new floor coverings by one of the methods recommended by RFCI and approved by manufacturer of new floor coverings.

7. Neatly cut openings and holes plumb, square and true to dimensions required. Use cutting methods least likely to damage construction to remain or adjoining construction. Temporarily cover openings to remain.

8. Maintain adequate ventilation when using cutting torches.

9. Air-Conditioning Equipment: Remove equipment without releasing refrigerants.

a. Refer to Division 23 HVAC for additional requirements.

B. Existing Items to Remain: Protect construction indicated to remain against damage and soiling during selective demolition. When permitted by the Owner, items may be removed to a suitable, protected storage location during selective demolition and cleaned and reinstalled in their original locations after selective demolition operations are complete.

3.04 POLLUTION CONTROLS

A. Use temporary enclosures, and other suitable methods to limit the spread of dust and dirt. Comply with governing environmental protection regulations.

1. Do not use water when it may damage existing construction or create hazardous or objectionable conditions, such as ice, flooding, and pollution.

B. Remove and transport debris in a manner that will prevent spillage on adjacent surfaces and areas.

1. Remove debris from elevated portions of building by chute, hoist, or other device that will convey debris to grade level.

C. Clean adjacent areas, structures and improvements of dust, dirt, and debris caused by selective demolition operations. Return adjacent areas to condition existing before start of selective demolition.

3.05 SALVAGE MATERIALS

A. All demolished material shall first be offered to the Owner. If not desired by the Owner, materials shall become Contractor's property to be removed from site and disposed of by the Contractor at the Contractor's expense unless noted otherwise on the Drawings.

3.06 REMOVED AND REINSTALLED MATERIALS

A. Clean and repair items to functional condition adequate for intended reuse. Paint equipment to match new equipment.

B. Pack or crate items after cleaning and repairing. Identify contents of containers.

C. Protect items from damage during transport and storage.

D. Reinstall items in locations indicated. Comply with installation requirements for new materials and equipment. Provide connections, supports, and miscellaneous materials necessary to make item functional for use indicated.

3.07 RECYCLING DEMOLISHED MATERIALS

A. General: Separate recyclable demolished materials from other demolished materials to the maximum extent possible. Separate recyclable materials by type.

1. Stockpile materials to be reused away from demolition area. Store components off the ground and protect from the weather.

2. Transport recyclable materials off Owner's property and legally dispose of them.

B. Recycling Incentives: Revenues, savings, rebates, tax credits, and other incentives received for recycling demolition materials shall accrue to Contractor.

C. Concrete: Remove reinforcement and other metals from concrete and sort with other metals.

1. Crush concrete and transport material off Owner's site for reuse or disposal.

D. Masonry: Remove metal reinforcement, anchors, and ties from masonry and sort with other metals. Clean and stack undamaged, whole masonry units on wood pallets for reuse or delivery to Owner as directed.

E. Metals: Separate metals by type.

3.08 DISPOSAL OF DEMOLISHED MATERIALS

A. Except for items or materials indicated to be recycled, reused, salvaged, reinstalled, or otherwise indicated to remain Owner's property, remove debris, rubbish and other materials resulting from demolition operations from building site as soon as possible. Storage of this material will not be permitted on the site. Transport and legally dispose of materials off site, without spillage on public streets.

1. Do not allow demolished materials to accumulate on-site.

2. Vehicles: To prevent littering of streets, cover open vehicles carrying debris from the building site.

3. If hazardous materials are encountered during demolition operations, comply with applicable regulations, laws, and ordinances concerning removal, handling and protection against exposure or environmental pollution.

4. Burning of removed materials is not permitted on Project site.

3.09 CLEAN-UP AND REPAIR

A. Upon completion of demolition work, remove tools, equipment and demolished materials from site. Remove protections and leave interior areas broom clean.

B. Repair demolition performed in excess of that required. Return structures and surfaces to remain to condition existing prior to commencement of selective demolition work. Repair adjacent construction or surfaces soiled or damaged by selective demolition work.

C. Where repairs to existing surfaces are required, patch to produce surfaces suitable for new construction as indicated on the Drawings.

D. Refer to Division 01 Sections for Cutting and Patching, Temporary Facilities and Controls and Cleaning and Waste Management, for additional requirements.

END OF SECTION 02 41 19

SECTION 03 30 00
CAST-IN-PLACE CONCRETE

PART 1 GENERAL

1.01 RELATED DOCUMENTS

A. Drawings and general provisions of the Contract, including General and Supplementary Conditions and Division 01 Specification Sections, apply to this Section.

1.02 SUMMARY

A. Section includes cast-in-place concrete, including formwork, reinforcement, concrete materials, mixture design, placement procedures, and finishes, for the following:

1. Footings.
2. Foundation walls.
3. Slabs-on-grade.

1.03 DEFINITIONS

A. Cementitious Materials: Portland cement alone or in combination with one of the following: fly ash or ground granulated blast-furnace slag; subject to compliance with requirements.

1.04 SUBMITTALS

A. Product Data: For each type of product indicated.

B. Design Mixtures: For each concrete mixture. Submit alternate design mixtures when characteristics of materials, Project conditions, weather, test results, or other circumstances warrant adjustments.

1. Indicate amounts of mixing water to be withheld for later addition at Project site.

C. Steel Reinforcement Shop Drawings: Placing drawings that detail fabrication, bending, and placement. Include bar sizes, lengths, material, grade, bar schedules, stirrup spacing, bent bar diagrams, bar arrangement, splices and laps, mechanical connections, tie spacing, hoop spacing, and supports for concrete reinforcement. Detailing shall conform to ACI 315-99 Details and Detailing of Concrete Reinforcement.

D. Formwork Shop Drawings: Prepared by or under the supervision of a qualified professional engineer detailing fabrication, assembly, and support of formwork.

1. Shoring and Reshoring: Indicate proposed schedule and sequence of stripping formwork, shoring removal, and reshoring installation and removal.

E. Construction Joint Layout: Indicate proposed construction joints required to construct the structure.

1. Location of construction joints is subject to approval of the Architect.

F. Material Certificates: For each of the following, signed by manufacturers:

1. Cementitious materials.
2. Admixtures.
3. Steel reinforcement and accessories.
4. Fiber reinforcement.
5. Waterstops.
6. Curing compounds.
7. Bonding agents.

8. Vapor retarders.

9. Integrally Colored Concrete for concrete slabs.

10. Decorative Concrete Clear Sealer.

G. Material Test Reports: For the following, from a qualified testing agency, indicating compliance with requirements:

1. Aggregates.

H. Floor surface flatness and levelness measurements indicating compliance with specified tolerances.

I. Field quality-control reports.

J. Integrally Colored Concrete Mockup:

1. Provide under provisions of Division 1 Section "Quality Control."

2. At location on Project selected by Architect, place and finish 10 feet by 10 feet area.

3. For accurate color, the quantity of concrete mixed to produce the sample should not be less than 3 cubic yards (or not less than 1/3 the capacity of the mixing drum on the ready mix truck) and should always be in full cubic yard increments. Excess material shall be discarded according to local regulations.

4. Construct mockup using processes and techniques intended for use on permanent work including curing procedures. Include samples of control, construction, and expansion joints in sample panels. Mockup shall be produced by the individual workers who will perform the work for the Project.

5. Retain samples of cements, sands, aggregates and color additives used in mockup for comparison with materials used in remaining work.

6. Accepted mockup provides visual standard for work of Section.

7. Mockup shall remain through completion of work for use as a quality standard for finished work.

1.05 QUALITY ASSURANCE

A. Manufacturer Qualifications: A firm experienced in manufacturing ready-mixed concrete products and that complies with ASTM C 94/C 94M requirements for production facilities and equipment.

B. Testing Agency Qualifications: An independent agency shall be retained by the owner, shall be acceptable to authorities having jurisdiction, and shall be qualified according to ASTM C 1077 and ASTM E 329 for testing indicated. See section 3.12 for further testing and inspection requirements.

1. Personnel conducting field tests shall be qualified as ACI Concrete Field Testing Technician, Grade 1, according to ACI CP-1 or an equivalent certification program.

2. Personnel performing laboratory tests shall be ACI-certified Concrete Strength Testing Technician and Concrete Laboratory Testing Technician - Grade I. Testing Agency laboratory supervisor shall be an ACI-certified Concrete Laboratory Testing Technician - Grade II.

C. Source Limitations: Obtain each type or class of cementitious material of the same brand from the same manufacturer's plant, obtain aggregate from single source, and obtain admixtures from single source from single manufacturer.

D. Welding Qualifications: Qualify procedures and personnel according to AWS D1.4/D 1.4M, "Structural Welding Code - Reinforcing Steel."

E. ACI Publications: Comply with the following unless modified by requirements in the Contract Documents:

1. ACI 301, "Specifications for Structural Concrete," Sections 1 through 5.

2. ACI 117, "Specifications for Tolerances for Concrete Construction and Materials."

F. Preinstallation Conference: Conduct conference at Project site.

1. Before submitting design mixtures, review concrete design mixture and examine procedures for ensuring quality of concrete materials. Require representatives of each entity directly concerned with cast-in-place concrete to attend, including the following:

a. Contractor's superintendent.

b. Independent testing agency responsible for concrete design mixtures.

c. Ready-mix concrete manufacturer.

d. Concrete subcontractor.

e. Special concrete finish subcontractor (if applicable).

2. Review special inspection and testing and inspecting agency procedures for field quality control, concrete finishes and finishing, cold- and hot-weather concreting procedures, curing procedures, construction contraction and isolation joints, and joint-filler strips, semirigid joint fillers, forms and form removal limitations, shoring and reshoring procedures, vapor-retarder installation, anchor rod and anchorage device installation tolerances, steel reinforcement installation, floor and slab flatness and levelness measurement, concrete repair procedures, and concrete protection.

1.06 PROJECT CONDITIONS

A. Integrally Colored Concrete Environmental Requirements:

1. Schedule placement to minimize exposure to wind and hot sun before curing materials are applied.

2. avoid placing concrete if rain, snow, or frost is forecast within 24-hours. Protect fresh concrete from moisture and freezing.

3. Comply with professional practices described in ACI 305R and ACI 306R.

1.07 DELIVERY, STORAGE, AND HANDLING

A. Steel Reinforcement: Deliver, store, and handle steel reinforcement to prevent bending and damage.

B. Waterstops: Store waterstops under cover to protect from moisture, sunlight, dirt, oil, and other contaminants.

PART 2 PRODUCTS

2.01 FORM-FACING MATERIALS

A. General: Formwork and accessories shall conform to ACI 301, Section 2.

B. Contractor shall discuss with Architect forms that will be used for exposed finished concrete within finished spaces. Mock-ups may be requested by the Architect.

C. Smooth-Formed Finished Concrete: Form-facing panels that will provide continuous, true, and smooth concrete surfaces. Furnish in largest practicable sizes to minimize number of joints.

1. Plywood, metal, or other approved panel materials.

D. Rough-Formed Finished Concrete: Plywood, lumber, metal, or another approved material. Provide lumber dressed on at least two edges and one side for tight fit.

E. Void Forms: Biodegradable paper surface, treated for moisture resistance, structurally sufficient to support weight of plastic concrete and other superimposed loads.

F. Chamfer Strips: Wood, metal, PVC, or rubber strips, 3/4 by 3/4 inch, minimum.

G. Form-Release Agent: Commercially formulated form-release agent that will not bond with, stain, or adversely affect concrete surfaces and will not impair subsequent treatments of concrete surfaces.

1. Formulate form-release agent with rust inhibitor for steel form-facing materials.

H. Form Ties: Factory-fabricated, removable or snap-off metal or glass-fiber-reinforced plastic form ties designed to resist lateral pressure of fresh concrete on forms and to prevent spalling of concrete on removal.

2.02 STEEL REINFORCEMENT

A. Reinforcing Bars: ASTM A 615/A 615M, Grade 60, deformed.

B. Low-Alloy-Steel Reinforcing Bars (weldable): ASTM A 706/A 706M, deformed.

C. Plain-Steel Welded Wire Reinforcement: ASTM A 185, plain, fabricated from as-drawn steel wire into flat sheets.

2.03 REINFORCEMENT ACCESSORIES

A. Epoxy Repair Coating: Liquid, two-part, epoxy repair coating; compatible with epoxy coating on reinforcement and complying with ASTM A 775.

B. Bar Supports: Bolsters, chairs, spacers, and other devices for spacing, supporting, and fastening reinforcing bars and welded wire reinforcement in place. Manufacture bar supports from steel wire, plastic, or precast concrete according to CRSI's "Manual of Standard Practice," of greater compressive strength than concrete and as follows:

1. For concrete surfaces exposed to view where legs of wire bar supports contact forms, use CRSI Class 1 plastic-protected steel wire or CRSI Class 2 stainless-steel bar supports.

2. For epoxy-coated reinforcement, use epoxy-coated or other dielectric-polymer-coated wire bar supports.

2.04 CONCRETE MATERIALS

A. Cementitious Material: Use the following cementitious materials, of the same type, brand, and source, throughout Project:

1. Portland Cement: ASTM C 150, Type I or Type III.

a. Fly Ash: ASTM C 618, Class F or C].

b. Ground Granulated Blast-Furnace Slag: ASTM C 989, Grade 100 or 120.

B. Normal-Weight Aggregates: ASTM C 33, coarse aggregate or better, graded. Provide aggregates from a single source.

1. Maximum Coarse-Aggregate Size: as indicated on the drawings.

2. Fine Aggregate: Free of materials with deleterious reactivity to alkali in cement.

C. Lightweight Aggregate: ASTM C 330, 1-inch nominal maximum aggregate size.

D. Water: ASTM C 94 and potable.

2.05 ADMIXTURES

A. Air-Entraining Admixture: ASTM C 260.

B. Chemical Admixtures: Provide admixtures certified by manufacturer to be compatible with other admixtures and that will not contribute water-soluble chloride ions exceeding those

permitted in hardened concrete. Do not use calcium chloride or admixtures containing calcium chloride.

1. Water-Reducing Admixture: ASTM C 494, Type A.
2. Retarding Admixture: ASTM C 494, Type B.
3. Water-Reducing and Retarding Admixture: ASTM C 494, Type D.
4. High-Range, Water-Reducing Admixture: ASTM C 494, Type F.
5. High-Range, Water-Reducing and Retarding Admixture: ASTM C 494, Type G.
6. Plasticizing and Retarding Admixture: ASTM C 1017, Type II.

C. Set-Accelerating Corrosion-Inhibiting Admixture (for parking structures exposed to de-icers): Commercially formulated, anodic inhibitor or mixed cathodic and anodic inhibitor; capable of forming a protective barrier and minimizing chloride reactions with steel reinforcement in concrete and complying with ASTM C 494/C 494M, Type C.

1. Products: Subject to compliance with requirements, available products that may be incorporated into the Work include, but are not limited to, the following:
   a. Axim Italcementi Group, Inc.; CATEXOL CN-CI.
   b. BASF Construction Chemicals - Building Systems; Rheocrete CNI.
   c. Euclid Chemical Company (The), an RPM company; ARRMATECT EUCON BCN EUCON CIA.
   d. Grace Construction Products, W. R. Grace & Co.; DCI.
   e. Sika Corporation; Sika CNI.

D. Non-Set-Accelerating Corrosion-Inhibiting Admixture (for parking structures exposed to de-icers): Commercially formulated, non-set-accelerating, anodic inhibitor or mixed cathodic and anodic inhibitor; capable of forming a protective barrier and minimizing chloride reactions with steel reinforcement in concrete.

1. Products: Subject to compliance with requirements, available products that may be incorporated into the Work include, but are not limited to, the following:
   a. BASF Construction Chemicals - Building Systems; Rheocrete 222+.
   b. Cortec Corporation; MCI- 2000 2005NS.
   c. Grace Construction Products, W. R. Grace & Co.; DCI-S.
   d. Sika Corporation; FerroGard 901.

E. Color Pigment: ASTM C 979, synthetic mineral-oxide pigments or colored water-reducing admixtures; color stable, free of carbon black, nonfading, and resistant to lime and other alkalis.

1. Colored admixture shall conform to the requirements of ACI 303.1, ASTM C979, ASTM C494 and ASSHTO M194.

F. Approved Manufacturers: Subject to compliance with requirements, provide products by one of the following available manufacturers offering products that may be incorporated into the Work include, but are not limited to the following:

1. Colorcrete by Increte Systems.

G. Basis-of-Design Product:

1. Subject to compliance with requirements provide product by one of the following:
   a. "Color-Crete Powder Integral color admixture"; by Increte (800-752-4626)

b. Approved Substitution.

2. Admixture shall be colored, water-reducing, admixture containing no calcium chloride with coloring agents that are limeproof and ultra-violet resistant.

3. Color: As indicated on Interior Finish Schedule on Drawings.

4. Add color pigment to concrete mixture according to manufacturer's written instructions and to result in hardened concrete color consistent with approved mockup.

2.06 WATERSTOPS

A. Flexible Rubber Waterstops: CE CRD-C 513, for embedding in concrete to prevent passage of fluids through joints. Factory fabricate corners, intersections, and directional changes.

1. Profile: Dumbbell without center bulb.

2. Dimensions: 9 inches by 3/8 inch thick; nontapered.

2.07 VAPOR RETARDERS

A. Refer to Dampproofing and Waterproofing Section 07 10 00 for Under-Slab Vapor Retarder materials.

2.08 CURING MATERIALS

A. General: As per ACI 301, Section 5, Article 5.2, with selections and supplements as specified herein.

B. Moisture-Retaining Cover: ASTM C 171, polyethylene film or white burlap-polyethylene sheet.

C. Water: Potable.

D. Clear, Waterborne, Membrane-Forming Curing Compound: ASTM C 309, Type 1 D, Class B, dissipating (sodium silicate type not permitted) having a fugitive dye to facilitate visual check of coverage.

2.09 RELATED MATERIALS

A. Premolded Joint Filler: Expansion and Isolation Joint Filler Strips: ASTM D 1751, asphalt-saturated cellulosic fiber or ASTM D 1752, cork or self-expanding cork. ½" thick x full depth of slab.

B. Bonding Agent: ASTM C 1059, Type II, non-redispersible, acrylic emulsion or styrene butadiene.

C. Dovetail Anchor Slots: Hot-dip galvanized-steel sheet, not less than 0.034 inch thick, with bent tab anchors. Temporarily fill or cover face opening of slots to prevent intrusion of concrete or debris.

2.10 CONCRETE MIXTURES, GENERAL

A. Prepare design mixtures for each type and strength of concrete, proportioned on the basis of laboratory trial mixture or field test data, or both, according to ACI 301.

1. Use a qualified independent testing agency for preparing and reporting proposed mixture designs based on laboratory trial mixtures.

B. All lightweight concrete shall conform to ACI 211.2-98 and shall meet the unit weight requirements of the specified UL classification (as stated on the Architectural drawings).

C. Cementitious Materials: Use fly ash or ground granulated blast-furnace slag to reduce the total amount of portland cement, which would otherwise be used. Limit percentage, by weight, of cementitious materials other than portland cement in concrete as follows:

1. Fly Ash: 20 percent.

2. Ground Granulated Blast-Furnace Slag: 15 percent.

3. Flyash shall not be used in combination with GGBFS.

D. Limit water-soluble, chloride-ion content in hardened concrete to 0.15 percent by weight of cement.

E. Admixtures: Use admixtures according to manufacturer's written instructions.

1. Use water-reducing and high-range water-reducing admixture in concrete, as required, for placement and workability.

2. Use water-reducing and retarding admixture when required by high temperatures, low humidity, or other adverse placement conditions.

3. Use water-reducing admixture in pumped concrete, parking structure slabs and concrete with a water-cementitious materials ratio below 0.50.

4. Use corrosion-inhibiting admixture in parking structure concrete mixtures where indicated.

2.11 FABRICATING REINFORCEMENT

A. General: Reinforcement shall conform to ACI 301, Section 3.

B. Fabricate steel reinforcement according to CRSI's "Manual of Standard Practice."

2.12 CONCRETE MIXING

A. Ready-Mixed Concrete: Measure, batch, mix, and deliver concrete according to ASTM C 94 and furnish batch ticket information.

1. When air temperature is between 85 and 90 deg F, reduce mixing and delivery time from 1-1/2 hours to 75 minutes; when air temperature is above 90 deg F, reduce mixing and delivery time to 60 minutes.

2.13 CONCRETE FLOOR STRIPPER

A. Concrete floor stripper for concrete flooring to receive clear sealer to be used in the following applications:

1. Clean and prep existing concrete flooring

2. Strip concrete curing compound from new cast-in-place concrete flooring.

B. Approved manufacturers

1. "Euco Clean and Strip"; by Euclid Chemical Co., An RPM Company; (800-321-7628)

2. No Substitutions.

2.14 DECORATIVE CONCRETE CLEAR SEALER

A. New and existing interior decorative concrete clear sealer.

B. Approved manufacturers:

1. "euco diamond hard liquid densifier and sealer"; by Euclid chemical co., an rpm company; (800-321-7628)

2. No substitutions

C. Materials

1. Type Clear, water-based, blend of siliconate polymers.

2. Ultraviolet Resistant

3. Non-yellowing

4. V.O.C. 0 g/l. Meets V.O.C. contents in accordance with EPA 40 CFR Part 59 Table 1 subpart D for Concrete Protective Coatings with a maximum V.O.C. content of 400 g/l.

PART 3 EXECUTION

3.01 FORMWORK

A. Design, erect, shore, brace, and maintain formwork, according to ACI 301, to support vertical, lateral, static, and dynamic loads, and construction loads that might be applied, until structure can support such loads.

B. Construct formwork so concrete members and structures are of size, shape, alignment, elevation, and position indicated, within tolerance limits of ACI 117.

C. Limit concrete surface irregularities, designated by ACI 347 as abrupt or gradual, as follows:

1. Class A, 1/8 inch for smooth-formed finished surfaces exposed to view.

2. Class B, 1/4 inch for rough-formed finished surfaces intended to receive plaster, stucco or wainscoating.

3. Class C, ½ inch for permanently exposed surfaces where finishes are not specified

D. Construct forms tight enough to prevent loss of concrete mortar.

E. Fabricate forms for easy removal without hammering or prying against concrete surfaces.

F. All exterior corners and edges of permanently exposed concrete shall be chamfered where shown on the drawings.

3.02 EMBEDDED ITEMS

A. Place and secure anchorage devices and other embedded items required for adjoining work that is attached to or supported by cast-in-place concrete. Use setting drawings, templates, diagrams, instructions, and directions furnished with items to be embedded.

1. Install anchor rods, accurately located, to elevations required and complying with tolerances in Section 7.5 of AISC's "Code of Standard Practice for Steel Buildings and Bridges."

2. Install reglets to receive waterproofing and to receive through-wall flashings in outer face of concrete frame at exterior walls, where flashing is shown at lintels, shelf angles, and other conditions.

3. Install dovetail anchor slots in concrete structures as indicated.

3.03 STEEL REINFORCEMENT

A. General: Reinforcement shall conform to ACI 301, and shall comply with CRSI's "Manual of Standard Practice" for placing reinforcement.

1. Do not cut or puncture vapor retarder. Repair damage and reseal vapor retarder before placing concrete.

B. Clean reinforcement of loose rust and mill scale, earth, ice, and other foreign materials that would reduce bond to concrete.

C. Accurately position, support, and secure reinforcement against displacement. Locate and support reinforcement with bar supports to maintain minimum concrete cover. Do not tack weld crossing reinforcing bars.

1. Weld reinforcing bars according to AWS D1.4, where indicated.

D. Set wire ties with ends directed into concrete, not toward exposed concrete surfaces.

E. Install welded wire reinforcement in longest practicable lengths on bar supports spaced to minimize sagging. Lap edges and ends of adjoining sheets at least one mesh spacing. Offset laps of adjoining sheet widths to prevent continuous laps in either direction. Lace overlaps with wire.

F. Epoxy-Coated Reinforcement: Repair cut and damaged epoxy coatings with epoxy repair coating according to ASTM D 3963. Use epoxy-coated steel wire ties to fasten epoxy-coated steel reinforcement.

3.04 JOINTS

A. General: Joints shall conform to ACI 301, Section 5. Construct joints true to line with faces perpendicular to surface plane of concrete.

B. Construction Joints: Install so strength and appearance of concrete are not impaired, at locations indicated or as approved by Architect.

1. Place joints perpendicular to main reinforcement. Continue reinforcement across construction joints unless otherwise indicated. Do not continue reinforcement through sides of strip placements of floors and slabs.

2. Form keyed joints as indicated. Embed keys at least 1-1/2 inches into concrete.

3. Locate joints for beams, slabs, joists, and girders in the middle third of spans. Offset joints in girders a minimum distance of twice the beam width from a beam-girder intersection.

4. Locate horizontal joints in walls and columns at underside of floors, slabs, beams, and girders and at the top of footings or floor slabs, unless noted otherwise on the drawings.

5. Space vertical joints in walls at 60 ft. maximum. Locate joints beside piers integral with walls, near corners, and in concealed locations where possible.

6. Use a bonding agent at locations where fresh concrete is placed against hardened or partially hardened concrete surfaces.

C. Contraction Joints in Slabs-on-Grade: Form weakened-plane contraction joints, sectioning concrete into areas as indicated. Construct contraction joints for a depth as shown in the drawing details.

1. Sawed Joints: Form control joints with power saws equipped with shatterproof abrasive or diamond-rimmed blades. Cut 1/8-inch-wide joints into concrete when cutting action will not tear, abrade, or otherwise damage surface and before concrete develops random contraction cracks (0-2 hours after the final finish at each joint location) using the early-entry dry-out process per ACI 302.1R. The saw shall employ the use of a skid plate to prevent spalling and raveling of the slab.

3.05 WATERSTOPS

A. Flexible Waterstops: Install in construction joints and at other joints indicated to form a continuous diaphragm. Install in longest lengths practicable. Support and protect exposed waterstops during progress of the Work. Field fabricate joints in waterstops according to manufacturer's written instructions.

3.06 CONCRETE PLACEMENT

A. General: As per ACI 301, Section 5, except as noted.

B. Before placing concrete, verify that installation of formwork, reinforcement, and embedded items is complete and that required inspections have been performed, including cleaning of reinforcing steel and forms.

C. Do not add water to concrete during delivery, at Project site, or during placement unless approved by Engineer.

D. Cold-Weather Placement: Comply with ACI 306.1 and as follows. Protect concrete work from physical damage or reduced strength that could be caused by frost, freezing actions, or low temperatures.

1. When average high and low temperature is expected to fall below 40 deg F for three successive days, maintain delivered concrete mixture temperature within the temperature range required by ACI 301.

2. Do not use frozen materials or materials containing ice or snow. Do not place concrete on frozen subgrade or on subgrade containing frozen materials.

3. Do not use calcium chloride, salt, or other materials containing antifreeze agents or chemical accelerators unless otherwise specified and approved in mixture designs.

E. Hot-Weather Placement: Comply with ACI 301 and as follows:

1. Maintain concrete temperature below 90 deg F at time of placement. Chilled mixing water or chopped ice may be used to control temperature, provided water equivalent of ice is calculated to total amount of mixing water. Using liquid nitrogen to cool concrete is Contractor's option.

2. Fog-spray forms, steel reinforcement, and subgrade just before placing concrete. Keep subgrade uniformly moist without standing water, soft spots, or dry areas.

3.07 FINISHING FORMED SURFACES

A. General: As per ACI 301, Section 5, Article 5.3.3, with selections as follows:

B. Rough-Formed Finish: As-cast concrete texture imparted by form-facing material with tie holes and defects repaired and patched. Remove fins and other projections that exceed specified limits on formed-surface irregularities.

1. Apply to concrete surfaces not exposed to public view.

C. Smooth-Formed Finish: As-cast concrete texture imparted by form-facing material, arranged in an orderly and symmetrical manner with a minimum of seams. Repair and patch tie holes and defects. Remove fins and other projections that exceed specified limits on formed-surface irregularities.

1. Apply to concrete surfaces exposed to public view, to receive a rubbed finish, to be covered with a coating or covering material applied directly to concrete such as waterproofing, dampproofing, painting or other similar systems.

D. Rubbed Finish: Apply the following to smooth-formed finished as-cast concrete exposed to public view, except when smooth formed finish for exposed overhead surfaces, whether or not painted.

1. Smooth-Rubbed Finish: Not later than one day after form removal, moisten concrete surfaces and rub with carborundum brick or another abrasive until producing a uniform color and texture. Do not apply cement grout other than that created by the rubbing process.

3.08 FINISHING FLOORS AND SLABS

A. General: Comply with ACI 302.1R recommendations for screeding, restraightening, and finishing operations for concrete surfaces. Do not wet concrete surfaces.

B. Scratch Finish: While still plastic, texture concrete surface that has been screeded and bull-floated or darbied. Use stiff brushes, brooms, or rakes to produce a profile amplitude of 1/4 inch in one direction.

1. Apply scratch finish to surfaces indicated on the architectural drawings to receive concrete floor toppings.

C. Float Finish: Consolidate surface with power-driven floats or by hand floating if area is small or inaccessible to power driven floats. Restraighten, cut down high spots, and fill low spots. Repeat float passes and restraightening until surface is left with a uniform, smooth, granular texture.

1. Apply float finish to surfaces to receive trowel finish and to be covered with fluid-applied or sheet waterproofing, built-up or membrane roofing, or sand-bed terrazzo.

D. Trowel Finish: After applying float finish, apply first troweling and consolidate concrete by hand or power-driven trowel. Continue troweling passes and restraighten until surface is free of trowel marks and uniform in texture and appearance. Grind smooth any surface defects that would telegraph through applied coatings or floor coverings.

1. Apply a trowel finish to surfaces exposed to view or to be covered with resilient flooring, carpet, ceramic or quarry tile set over a cleavage membrane, paint, or another thin-film-finish coating system.

2. For floors greater than 10,000 sf, finish surfaces to the following tolerances, according to ASTM E 1155 , for a randomly trafficked floor surface:

a. Specified overall values of flatness, F(F) 25; and of levelness, F(L) 20; with minimum local values of flatness, F(F) 17; and of levelness, F(L) 15; for carpeted slabs-on-grade.

b. Specified overall values of flatness, F(F) 35; and of levelness, F(L) 25; with minimum local values of flatness, F(F) 24; and of levelness, F(L) 17; for slabs-on-grade with thin floor coverings.

c. Specified overall values of flatness, F(F) 30; and of levelness, F(L) 20; with minimum local values of flatness, F(F) 24; and of levelness, F(L) 15; for suspended slabs. (F(L) measured with shored floors only.)

d. Specified overall values of flatness, F(F) 45; and of levelness, F(L) 35; with minimum local values of flatness, F(F) 30; and of levelness, F(L) 24; for very flat floors for ice rink, roller rink, etc.

3. For floors less than or equal to 10,000 sf, finish and measure surface so gap at any point between concrete surface and an unleveled, freestanding, 10-ft.- long straightedge resting on two high spots and placed anywhere on the surface does not exceed 1/8 inch .

E. Trowel and Fine-Broom Finish: Apply a first trowel finish to surfaces indicated on the architectural drawings where ceramic or quarry tile is to be installed by either thickset or thin-set method. While concrete is still plastic, slightly scarify surface with a fine broom.

1. Comply with flatness and levelness tolerances for trowel-finished floor surfaces.

F. Broom Finish: Apply a broom finish to exterior concrete platforms, steps, ramps, and elsewhere as indicated.

1. Immediately after float finishing, slightly roughen trafficked surface by brooming with fiber-bristle broom perpendicular to main traffic route. Coordinate required final finish with Architect before application.

3.09 MISCELLANEOUS CONCRETE ITEMS

A. Filling In: Fill in holes and openings left in concrete structures after work of other trades is in place unless otherwise indicated. Mix, place, and cure concrete, as specified, to blend with in-place construction. Provide other miscellaneous concrete filling indicated or required to complete the Work.

B. Steel Pan Stairs: Provide concrete fill for steel pan stair treads, landings, and associated items. Cast-in inserts and accessories as shown on Drawings. Screed, tamp, and trowel finish concrete surfaces.

3.10 CONCRETE PROTECTING AND CURING

A. General: Protect freshly placed concrete from premature drying and excessive cold or hot temperatures. Comply with ACI 306.1 for cold-weather protection and ACI 301 for hot-weather protection during curing.

B. Evaporation Retarder: Apply evaporation retarder to unformed concrete surfaces if hot, dry, or windy conditions cause moisture loss approaching 0.2 lb/sq. ft. x h before and during finishing operations. Apply according to manufacturer's written instructions after placing, screeding, and bull floating or darbying concrete, but before float finishing.

C. Formed Surfaces: Cure formed concrete surfaces, including underside of beams, supported slabs, and other similar surfaces. If forms remain during curing period, moist cure after loosening forms. If removing forms before end of curing period, continue curing for the remainder of the curing period.

D. Unformed Surfaces: Begin curing immediately after finishing concrete. Cure unformed surfaces, including floors and slabs, concrete floor toppings, and other surfaces.

E. Cure concrete according to ACI 308.1, by one or a combination of the following methods:

1. Moisture Curing: Keep surfaces continuously moist for not less than seven days with the following materials:

   a. Water.

   b. Continuous water-fog spray.

   c. Absorptive cover, water saturated, and kept continuously wet. Cover concrete surfaces and edges with 12-inch lap over adjacent absorptive covers.

2. Moisture-Retaining-Cover Curing: Cover concrete surfaces with moisture-retaining cover for curing concrete, placed in widest practicable width, with sides and ends lapped at least 12 inches, and sealed by waterproof tape or adhesive. Cure for not less than seven days. Immediately repair any holes or tears during curing period using cover material and waterproof tape.

   a. Moisture cure or use moisture-retaining covers to cure concrete surfaces to receive floor coverings.

   b. Moisture cure or use moisture-retaining covers to cure concrete surfaces to receive penetrating liquid floor treatments.

   c. Cure concrete surfaces to receive floor coverings with either a moisture-retaining cover or a curing compound that the manufacturer certifies will not interfere with bonding of floor covering used on Project.

3. Curing and Sealing Compound: Apply uniformly to floors and slabs indicated in a continuous operation by power spray or roller according to manufacturer's written instructions. Recoat areas subjected to heavy rainfall within three hours after initial application. Repeat process 24 hours later and apply a second coat. Maintain continuity of coating and repair damage during curing period.

F. Integrally Colored Concrete: Apply curing compound for integrally colored concrete according to manufacturer's instructions using manufacturer's recommended application techniques. Apply curing compound at consistent time for each pour to maintain close color consistency.

1. Curing compound shall be same color as the colored concrete and supplied by same manufacturer of the colored admixture.

2. Precautions shall be taken in hot weather to prevent plastic cracking resulting from excessively rapid drying at surface as described in CIP 5 Plastic Shrinkage Cracking published by the National Ready Mixed Concrete Associations.

3. Do not cover concrete with plastic sheeting.

3.11 CONCRETE SURFACE REPAIRS

A. Defective Concrete: Repair and patch defective areas when approved by Architect. Remove and replace concrete that cannot be repaired and patched to Architect's approval.

B. Patching Mortar: Mix dry-pack patching mortar, consisting of one part portland cement to two and one-half parts fine aggregate passing a No. 16 sieve, using only enough water for handling and placing.

C. Repairing Formed Surfaces: Surface defects include color and texture irregularities, cracks, spalls, air bubbles, honeycombs, rock pockets, fins and other projections on the surface, and stains and other discolorations that cannot be removed by cleaning.

1. Immediately after form removal, cut out honeycombs, rock pockets, and voids more than 1/2 inch in any dimension to solid concrete. Limit cut depth to 3/4 inch. Make edges of cuts perpendicular to concrete surface. Clean, dampen with water, and brush-coat holes and voids with bonding agent. Fill and compact with patching mortar before bonding agent has dried. Fill form-tie voids with patching mortar or cone plugs secured in place with bonding agent.

2. Repair defects on surfaces exposed to view by blending white portland cement and standard portland cement so that, when dry, patching mortar will match surrounding color. Patch a test area at inconspicuous locations to verify mixture and color match before proceeding with patching. Compact mortar in place and strike off slightly higher than surrounding surface.

3. Repair defects on concealed formed surfaces that affect concrete's durability and structural performance as determined by Architect.

D. Repairing Unformed Surfaces: Test unformed surfaces, such as floors and slabs, for finish and verify surface tolerances specified for each surface. Correct low and high areas. Test surfaces sloped to drain for trueness of slope and smoothness; use a sloped template.

1. Repair finished surfaces containing defects. Surface defects include spalls, popouts, honeycombs, rock pockets, crazing and cracks in excess of 0.01 inch wide or that penetrate to reinforcement or completely through unreinforced sections regardless of width, and other objectionable conditions.

2. After concrete has cured at least 14 days, correct high areas by grinding.

3. Correct localized low areas during or immediately after completing surface finishing operations by cutting out low areas and replacing with patching mortar. Finish repaired areas to blend into adjacent concrete.

4. Correct other low areas scheduled to receive floor coverings with a repair underlayment. Prepare, mix, and apply repair underlayment and primer according to manufacturer's written instructions to produce a smooth, uniform, plane, and level surface. Feather edges to match adjacent floor elevations.

5. Repair defective areas, except random cracks and single holes 1 inch or less in diameter, by cutting out and replacing with fresh concrete. Remove defective areas with clean, square cuts and expose steel reinforcement with at least a 3/4-inch clearance all around. Dampen concrete surfaces in contact with patching concrete and apply bonding agent. Mix patching concrete of same materials and mixture as original concrete except without coarse aggregate. Place, compact, and finish to blend with adjacent finished concrete. Cure in same manner as adjacent concrete.

6. Repair random cracks and single holes 1 inch or less in diameter with patching mortar. Groove top of cracks and cut out holes to sound concrete and clean off dust, dirt, and loose particles. Dampen cleaned concrete surfaces and apply bonding agent. Place patching mortar before bonding agent has dried. Compact patching mortar and finish to match adjacent concrete. Keep patched area continuously moist for at least 72 hours.

E. Perform structural repairs of concrete, subject to Architect's approval, using epoxy adhesive and patching mortar.

F. Repair materials and installation not specified above may be used, subject to Architect's approval.

3.12 FIELD QUALITY CONTROL

A. Testing and Inspecting: Owner will engage a special inspector and qualified testing and inspecting agency to perform field tests and inspections and prepare test reports. See Section 1.5, B for further qualifications.

B. Concrete testing shall be in accordance with ACI 301, Section 1, Article 1.6 except as noted herein.

C. Required special inspection and verification as outlined in IBC Table 1704.4.

1. Steel reinforcement and placement.

2. Steel reinforcement welding.

3. Embedded bolts and studs to be installed in concrete prior to concrete placement.

4. Verification of use of required design mixture.

5. At the time concrete is sampled for test cylinders, perform slump and air content tests and temperature of concrete.

6. Concrete placement, including conveying and depositing.

7. Curing procedures and maintenance of curing temperature.

8. Verification of concrete strength before removal of shores and forms from beams and slabs.

9. Verification of concrete strength prior to stressing of post-tensioned tendons.

D. Concrete Tests: Testing of composite samples of fresh concrete obtained according to ASTM C 172 shall be performed according to the following requirements:

1. Testing Frequency: Obtain one composite sample for each day's pour of each concrete mixture exceeding 10 cu. yd., but less than 25 cu. yd., plus one set for each additional 50 cu. yd. or fraction thereof, unless authorized otherwise by the engineer.

a. When frequency of testing will provide fewer than five compressive-strength tests for each concrete mixture, testing shall be conducted from at least five randomly selected batches or from each batch if fewer than five are used.

2. All samples shall be taken after any addition of water at the job site is complete. When pumping or pneumatic equipment is used, samples shall be taken at discharge end. This is for both cylinders and slump tests.

3. Slump: ASTM C 143; one test at point of placement for each composite sample, but not less than one test for each day's pour of each concrete mixture. Perform additional tests when concrete consistency appears to change.

4. Air Content: ASTM C 231, pressure method, for normal-weight concrete; ASTM C 173, volumetric method, for structural lightweight concrete; one test for each composite sample, but not less than one test for each day's pour of each concrete mixture.

a. Air content tests shall be made on all concrete whether the concrete is designated as air-entrained or not.

b. Additional air contents tests, for concrete specified as air-entrained, shall be made when any of the following conditions occur:

1) A change in appearance or consistency of concrete.

2) Possible reduction of air content due to time delays of truck and/or hot weather.

3) When air temperature is over 80 deg F, check each truck load.

c. Inform Engineer immediately of any slump and/or air content tests that do not meet these specifications. If strength, durability or aesthetics of the structure would be impaired, that concrete shall not be used.

5. Concrete Temperature: ASTM C 1064; one test hourly when air temperature is 40 deg F and below and when 80 deg F and above, and one test for each composite sample.

6. Compression Test Specimens: ASTM C 31.

a. Cast and laboratory cure four standard cylinder specimens for each composite sample.

7. Compressive-Strength Tests: ASTM C 39; test one laboratory-cured specimen at 7 days (2days for post tensioned concrete) and one set of two specimens at 28 days. Retain one cylinder for possible 56 day test if required.

a. The 28-day compressive-strength test shall be the average compressive strength from a set of two specimens obtained from same composite sample and tested at age indicated.

8. When strength of field-cured cylinders is less than 85 percent of companion laboratory-cured cylinders, Contractor shall evaluate operations and provide corrective procedures for protecting and curing in-place concrete.

9. Strength of each concrete mixture will be satisfactory if every average of any three consecutive compressive-strength tests equals or exceeds specified compressive strength and no compressive-strength test value falls below specified compressive strength by more than 500 psi.

10. Test results shall be reported in writing to the Structural Engineer, Architect, concrete manufacturer, and Contractor within 48 hours of testing. Reports of compressive-strength tests shall contain Project identification name and number, date of concrete placement, name of concrete testing and inspecting agency, location of concrete batch in Work, design compressive strength at 28 days, concrete mixture proportions and materials, compressive breaking strength, and type of break for both 7- and 28-day tests.

11. Verbal information on any concrete not meeting these specifications shall be communicated to the engineer immediately by phone.

12. Nondestructive Testing: Impact hammer, sonoscope, or other nondestructive device may be permitted by Architect but will not be used as sole basis for approval or rejection of concrete.

13. Additional Tests: Testing and inspecting agency shall make additional tests of concrete when test results indicate that slump, air entrainment, compressive strengths, or other requirements have not been met, as directed by Architect. Testing and inspecting agency may conduct tests to determine adequacy of concrete by cored cylinders complying with ASTM C 42 by other methods as directed by Architect.

14. Additional testing and inspecting, at Contractor's expense, will be performed to determine compliance of replaced or additional work with specified requirements.

15. Correct deficiencies in the Work that test reports and inspections indicate do not comply with the Contract Documents.

E. Measure floor and slab flatness and levelness according to ASTM E 1155 within **[48]** hours of finishing.

END OF SECTION 03 30 00

SECTION 04 20 00
UNIT MASONRY

PART 1 GENERAL

1.01 SUMMARY

A. Section Includes:

1. Types of masonry work required include:

a. Standard Concrete Masonry Units at Interior

b. Standard Face Brick

c. Special Masonry Shapes

d. Mortar and Grout

e. Reinforcing Steel

f. Masonry Joint Reinforcement

g. Required Masonry Ties and Anchors

B. Related Sections:

1. Section 07 19 00 – Water Repellents

2. Section 07 20 00 - Thermal Protection for insulation materials used in masonry cavity walls

3. Section 07 62 00 - Sheet Metal Flashing and Trim

4. Section 07 92 00 - Joint Sealants

5. Section 09 90 00 – Painting for interior CMU walls to be painted

C. Products installed, but not furnished, under this Section include the following:

1. Steel Lintels for unit masonry, furnished under Section 05 50 00 - Metal Fabrications.

2. Hollow-metal frames in unit masonry openings, furnished under Section 08 11 13 Hollow Metal Doors and Frames.

1.02 REFERENCES

A. ASTM International Publications:

1. A82 "Standard Specification for Steel Wire, Plain, for Concrete Reinforcement"

2. A185 "Standard Specification for Steel Welded Wire Reinforcement, Plain, for Concrete"

3. A307 "Standard Specification for Carbon Steel Bolts and Studs, 60 000 PSI Tensile Strength"

4. A496 "Standard Specification for Steel Wire, Deformed, for Concrete Reinforcement"

5. A497 "Standard Specification for Steel Welded Wire Reinforcement, Deformed, for Concrete"

6. A615 "Standard Specification for Deformed and Plain Billet-Steel Bars for Concrete Reinforcement"

7. A951 "Standard Specification for Masonry Joint Reinforcement"

8. C90 "Standard Specification for Loadbearing Concrete Masonry Units"

9. C140 "Test Methods of Sampling and Testing Concrete Masonry Units and Related Units"

10. C144 "Standard Specification for Aggregate for Masonry Mortar"
11. C216 "Standard Specification for Facing Brick (Solid Masonry Units Made from Clay or Shale)"
12. C270 "Standard Specification for Mortar for Unit Masonry"
13. C404 "Standard Specification for Aggregates for Masonry Grout"
14. C476 "Standard Specification for Grout for Masonry"
15. C641 "Standard Test Methods for Mastics and Coatings Used With Thermal Insulation"
16. C1314 "Standard Test Method for Compressive Strength of Masonry Prisms"
17. D226 "Standard Specification for Asphalt-Saturated Organic Felt Used in Roofing and Waterproofing"
18. D2287 "Standard Specification for Nonrigid Vinyl Chloride Polymer and Copolymer Molding and Extrusion Compounds"
19. E119 "Standard Test Methods for Fire Tests of Building Construction and Materials"
20. E514 "Test Method for Water Penetration and Leakage through Masonry"

B. Joint American Concrete Institute (ACI) / American Society of Civil Engineers (ASCE) / The Masonry Society (TMS) Publications:

1. ACI 530-1/ASCE 6/TMS 602 "Specification for Masonry Structures"
2. ACI 530/ASCE 5/TMS 402 "Building Code Requirements for Masonry Structures"

C. National Concrete Masonry Association (NCMA) Publications:

1. "Tek" Bulletins

1.03 PERFORMANCE REQUIREMENTS

A. Provide unit masonry that develops the following net-area compressive strengths at 28 days. Determine compressive strength of masonry from net-area compressive strengths of masonry units and mortar types according to Tables 1 and 2 in ACI 530.1/ASCE 6/TMS 602.

B. Determine net-area compressive strength of masonry by testing masonry prisms according to ASTM C1314.

C. Fire Resistance Ratings: Where indicated, provide materials and construction which are identical to those of assemblies with fire-resistance ratings determined by testing in compliance with ASTM E119 by a recognized testing and inspecting organization, by equivalent concrete masonry thickness, or by another means, as acceptable to authorities having jurisdiction.

1.04 SUBMITTALS

A. General: Submit the following in accordance with Conditions of Contract and Division 01 Specification Sections:

1. Product Data: Submit manufacturer's product data for each type of masonry unit, accessory, and other manufactured products, including certifications that each type complies with specified requirements.
2. Samples for Initial Selection: For the following:
   a. Unit masonry samples in small-scale form showing the full range of colors and textures available for each different exposed masonry unit required.
   b. Colored mortar Samples showing the full range of colors available.

B. Cold-Weather Procedures: Detailed description of methods, materials, and equipment to be used to comply with cold-weather requirements.

1.05 QUALITY ASSURANCE

A. Unit Masonry Standard: Comply with ACI 530.1/ASCE 6/TMS 602, "Specifications for Masonry Structures", except as otherwise indicated.

1. Revise ACI 530.1/ASCE 6 to exclude Sections 1.5; Parts 1.6-A.1.b and 1.6-A.1.c; an d Part 3.3-E.

B. Fire Resistance Ratings: Where indicated, provide materials and construction which are identical to those of assemblies with fire-resistance ratings determined by testing in compliance with ASTM E119 by a recognized testing and inspecting organization, by equivalent concrete masonry thickness, or by another means, as acceptable to authority having jurisdiction.

C. Single Source Responsibility for Masonry Units: Obtain exposed masonry units of uniform texture and color, or a uniform blend within the ranges accepted for these characteristics, through one source from a single manufacturer for each different product required for each continuous surface or visually related surfaces.

D. Single Source Responsibility for Mortar Materials: Obtain mortar ingredients of uniform quality, including color for exposed masonry, from one manufacturer for each cementitious component and from one source and producer for each aggregate.

1.06 DELIVERY, STORAGE, AND HANDLING

A. Deliver masonry materials to project in undamaged condition.

B. Store masonry units on elevated platforms in a dry location. If units are not stored in an enclosed location, cover tops and sides of stacks with waterproof sheeting, securely tied. If units become wet, do not install until they are dry.

C. Store cementitious materials on elevated platforms, under cover, and in a dry location. Do not use cementitious materials that have become damp.

D. Store aggregates where grading and other required characteristics can be maintained, and contamination avoided.

E. Store masonry accessories, including metal items, to prevent deterioration by corrosion and accumulation of dirt.

F. Ground Faced Masonry Units shall be delivered to the jobsite on banded wood pallets. Each exposed face shall be protected by a plastic protective layer. Each edge of a cube shall be protected by a pre-molded edge protector. Each cube shall be protected by a clear plastic wrap. Pallets shall be stored in single stacks on level ground and covered with waterproof cover. Units must be handled carefully to avoid breakage and damage to the finished surfaces.

G. Deliver preblended, dry mortar mix in moisture-resistant containers designed for lifting and emptying into dispensing silo. Store preblended, dry mortar mix in delivery containers on elevated platforms, under cover, and in a dry location or in a metal dispensing silo with weatherproof cover.

1.07 PROJECT/SITE CONDITIONS

A. Protection of Work: During construction, cover tops of walls, projections, and sills with waterproof sheeting at end of each day's work. Cover partially completed masonry when construction is not in progress.

1. Extend cover a minimum of 24 inches down both sides and hold cover securely in place.

2. Where one wythe of multi-wythe masonry walls is completed in advance of other wythes, secure cover a minimum of 24 inches down face next to unconstructed wythe and hold cover in place.

B. Do not apply uniform roof loading for at least 12 hours after building masonry walls or columns.

C. Do not apply uniform roof or floor loading until the masonry has cured to the extent that it will safely support the intended load, a minimum of 12 hours after building masonry walls or columns.

D. Do not apply concentrated loads until the masonry has cured to the extent that it will safely support the intended load, a minimum of 3 days after building masonry walls or columns.

E. Staining: Prevent grout, mortar, and soil from staining the face of masonry to be left exposed or painted. Immediately remove grout, mortar, and soil that come in contact with such masonry.

1. Protect base of walls from rain-splashed mud and from mortar splatter by means of coverings spread on ground and over wall surface.

2. Protect surfaces of window and door frames, as well as similar products with painted and integral finishes, from mortar droppings.

1.08 COLD AND HOT WEATHER PROTECTION

A. Cold-Weather Requirements: Do not use frozen materials or materials mixed or coated with ice or frost. Do not build on frozen subgrade or setting beds. Remove and replace unit masonry damaged by frost or by freezing conditions. Comply with cold weather construction requirements contained in ACI 530.1/ASCE 6/TMS 602.

B. Remove masonry damaged by freezing conditions.

C. Cold Weather Construction: When the ambient temperature is within the limits indicated, use the following procedures:

1. 40 to 32 deg F: Heat mixing water or sand to produce mortar temperatures between 40 and 120 deg F.

2. 32 to 25 deg F: Heat mixing water and sand to produce mortar temperatures between 40 and 120 deg F. Heat grout materials to produce grout temperatures between 40 and 120 deg F. Maintain mortar and grout above freezing until used in masonry.

3. 25 to 20 deg F: Heat mixing water and sand to produce mortar temperatures between 40 and 120 deg F. Heat grout materials to produce grout temperatures between 40 and 120 deg F. Maintain mortar and grout above freezing until used in masonry. Heat masonry units to 40 deg F if grouting. Use heat on both sides of walls under construction.

4. 20 deg F and Below: Heat mixing water and sand to produce mortar temperatures between 40 and 120 deg F. Heat grout materials to produce grout temperatures between 40 and 120 deg F. Maintain mortar and grout above freezing until used in masonry. Heat masonry units to 40 deg F. Provide enclosures and use heat on both sides of walls under construction to maintain temperatures above 32 deg F within the enclosures.

D. Cold-Weather Protection: When the mean daily temperature is within the limits indicated, provide the following protection:

1. 40 to 25 deg F: Cover masonry with a weather-resistant membrane for 48 hours after construction.

2. 25 to 20 deg F: Cover masonry with insulating blankets or provide enclosure and heat for 48 hours after construction to prevent freezing. Install wind breaks when wind velocity exceeds 15 mi./h.

3. 20 deg F and Below: Provide enclosure and heat to maintain temperatures above 32 deg F within the enclosure for 48 hours after construction.

E. Cold-Weather Cleaning: Use liquid cleaning methods only when air temperature is 40 deg F and above and will remain so until masonry has dried out, but not less than 7 days after completion of cleaning.

F. Hot-Weather Requirements: Protect unit masonry work when temperature and humidity conditions produce excessive evaporation of water from mortar and grout. Provide artificial shade and wind breaks and use cooled materials as required.

1. Comply with hot weather construction requirements contained in ACI 530.1/ASCE 6/TMS 602.

2. When ambient temperature exceeds 100 deg F, or 90 deg F with a wind velocity greater than 8 mph, do not spread mortar beds more than 48 inches ahead of masonry. Set masonry units within one minute of spreading mortar.

PART 2 PRODUCTS

2.01 STANDARD CONCRETE MASONRY UNITS

A. Approved Manufacturers:

1. Schory Concrete Products (330-456-2700)

2. Charles Svec & Company (216-662-5200)

3. Medina Supply Company (330-928-9777)

4. Oberfield's, Inc. (800-845-7644)

5. Oldcastle Architectural Inc. (800-899-8455)

6. Approved Substitution.

B. General: Comply with referenced standards and other requirements indicated below applicable to each form of concrete masonry unit required.

1. Provide special shapes where required for lintels, corners, jambs, sash, control joints, headers, bonding and other special conditions.

2. Provide bullnose units for outside corners, unless indicated otherwise on the Drawings.

C. Concrete Masonry Units: Provide units complying with characteristics indicated below for grade, type, face size, exposed face and, under each form of block included, for weight classification:

1. Grade N-1

2. Size:

a. Unless noted otherwise, provide manufacturer's standard units with nominal face dimensions of 16" long x 8" high (15-5/8" x 7-5/8" actual) x thickness indicated.

3. Exposed Faces:

a. Manufacturer's Standard Gray Color and Texture

b. Face Finish:

1) Smooth

4. Hollow Loadbearing Block: ASTM C90, and as follows:

a. Weight Classification: Medium weight, minimum compressive strength of 2000 psi (net area).

5. Solid Loadbearing Block: ASTM C145, and as follows:

a. Weight Classification: Medium weight, minimum compressive strength of 2000 psi.

2.01 FACE BRICK:

A. General: Provide shapes indicated and as follows:

1. Provide units without cores or frogs and with exposed surfaces finished for ends of sills and caps and for similar applications that would otherwise expose unfinished brick surfaces.

2. Efflorescence: Provide brick that has been tested according to ASTM C67 and is rated "not effloresced".

3. Face Brick: [ASTM C216], Grade SW, Type FBS absorption not more than 9% by dry weight per ASTM C67.

4. Size and Color: To match existing.

B. Approved Manufacturers:

1. Belden Brick Company (330-456-0031)

2. Endicott Clay Products Co.) (800-927-9179)

3. Glen-Gery Brick (610-374-4011)

1.02 FIRE RATINGS: Where fire ratings on masonry walls are shown on the Drawings, the Contractor shall make certain that the fire-resistant units to be used qualify for the ratings.

1.03 MORTAR AND GROUT MATERIALS

A. Colored Cement Product: Packaged blend made from masonry cement and mortar pigments, all complying with specified requirements, and containing no other ingredients.

1. Approved Manufacturers:

a. Essroc, Italcementi Group (800-245-1717)

b. LeHigh Cement Co. (800-523-5488)

c. Cemex (800-245-1705)

d. Custom Building Products (800-272-8786)

e. LaFarge Corporation (800-336-2490)

2. Basis-of Design Product: Subject to compliance with requirements provide the following or product by a listed manufacturer:

a. Match Existing

3. Formulate blend as required to produce color indicated or, if not indicated, as selected from manufacturer's standard colors. Use cement with synthetic iron oxide pigment only.

4. Aggregate for Mortar: ASTM C144; except for joints less than 1/4 inch thick, use aggregate graded with 100 percent passing the No. 16 sieve.

a. White-Mortar Aggregates: Natural white sand or ground white stone.

b. Colored-Mortar Aggregates: Natural-colored sand or ground marble, granite, or other sound stone; of color necessary to produce required mortar color.

B. Aggregate for Grout: ASTM C404.

C. Grout for Unit Masonry: Comply with ASTM C476 for grout for use in construction of reinforced and nonreinforced unit masonry. Use grout of consistency indicated or, if not otherwise indicated, of consistency (fine or coarse) at time of placement which will completely fill all spaces intended to receive grout. Minimum compressive strength shall be 2,500 psi in 28 days.

1. Use fine grout in grout spaces less than 2" in horizontal direction, unless otherwise indicated.

2. Use coarse grout (maximum 3/8" aggregate) in grout spaces 2" or more in least horizontal dimension, unless otherwise indicated.

D. Water Repellent Admix:

1. Approved Manufacturers:

a. "Dry-Block System Mortar Additive"; W. R. Grace & Co., Construction Products Div (800-558-7066)

b. "Blocktite Mortar Admixture"; Euclid Chemical Co, An RPM Company; (800-321-7628)

2. Mortar additive shall be used in Type M or S Mortar Only.

E. Mortar Color: Match Existing

F. Water: Potable

G. Cold Weather additives shall NOT be used.

1.04 JOINT REINFORCEMENT, TIES AND ANCHORING DEVICES

A. General: Comply with ASTM A 951.

B. Materials: Comply with requirements indicated below for basic materials and with requirements indicated under each form of joint reinforcement, tie and anchor for size and other characteristics:

1. Mill Galvanized Steel Wire: ASTM A82 for uncoated wire and with ASTM C641 for zinc coating of class indicated below:

a. Class 1 (0.40 oz. per sq. ft. of wire surface).

2. Hot-Dip Galvanized, Carbon Steel Wire: ASTM A82 with ASTM A153 for zinc coating of class indicated below:

a. Class B-2.

C. Joint Reinforcement: Provide welded-wire units prefabricated with deformed continuous side rods and plain cross rods into straight lengths of not less than 10', with prefabricated corner and tee units, and complying with requirements indicated below:

1. Width: Fabricate joint reinforcement in units with widths of approximately 2" less than nominal width of walls and partitions as required to provide mortar coverage of not less than 5/8" on joint faces exposed to exterior.

2. Wire Size for Side and Cross Rods: #9 Gauge

3. For single-wythe masonry, provide type as follows with single pair of side rods:

a. Truss design with continuous diagonal cross rods spaced not more than 16" o.c.

4. For multi-wythe masonry with cavity filled solid with mortar, provide type as follows:

a. Truss design with diagonal cross rods spaced not more than 16" o.c. and number of side rods as follows:

b. Number of Side Rods for Multiple-Wythe Concrete Masonry: One side rod for each face shell of concrete masonry back-up and of concrete masonry facing wythe.

5. For multi-wythe masonry with cavity containing insulation and air space, provide type as follows:

a. Ladder design with perpendicular cross roads spade not more than 16" o.c. vertically and one pintle tie for each 1.77 square feet of wall area.

b. Approved Manufacturers:

1) "270 Ladder Lox-all Adjustable Eye Wire"; Hohmann & Barnard, Inc. (800-645-0616)

2) "Ladur-eye"; Dur-O-Wal, A Dayton Superior Company (800-323-0090)

D. Flexible Anchors: Where flexible anchors are indicated for connecting masonry to structural framework, provide 2-piece anchors, as described below, which permit vertical or horizontal differential movement between wall and framework parallel to, but resist tension and compression forces perpendicular to, plane of wall.

1. Masonry Veneer Anchors: Two-piece assemblies which permit vertical or horizontal differential movement between wall and framework parallel to, but resist tension and compression forces perpendicular to, plane of wall, consisting of wire tie section and metal anchor section for attachment over sheathing to metal studs and complying with the following requirements:

a. Wire Size: 0.1875" Diameter

b. Wire Tie Shape: Rectangular with Cavity Drip

c. Wire Tie Length: As Required to Extend Within 1-1/2" of Masonry Wythe of Veneer Face

2. Control Joint Anchors: Corrugated galvanized steel, 6-1/4" long x 1" wide x 24 gauge, with 1/4" wide x 1-3/4" deep V-groove.

E. Anchor Section: Sheet metal plate, with screw holes tope and bottom and with raised, rib-stiffened strap stamped into center to provide slot between strap and plate for connection of wire tie, of overall size and thickness indicated below:

1. Size: Plate and strap size: 1-1/4" wide for plate, 5/8" for strap x lengths indicated below. Slot clearance formed between face of plate and back of strap at maximum rib projection: 1/32" + diameter of wire tie.

2. Plate and Strap Lengths: 5" and 3-5/8", with both sides of plate stiffened by ribs.

3. Thickness: 0.0747" (14 Gauge)

1.05 REINFORCING STEEL

A. General: Provide reinforcing steel complying with requirements of referenced unit masonry standard and this article.

B. Steel Reinforcing Bars: Material and grade as follows:

1. Billet steel complying with ASTM A615, Grade 60.

C. Deformed Reinforcing Wire: ASTM A496.

D. Plain Welded Wire Fabric: ASTM A185.

E. Deformed Welded Wire Fabric: ASTM A497.

1.06 ACCESSORIES

A. Premolded Control Joint Strips: Material as indicated below, designed to fit standard sash block and to maintain lateral stability in masonry wall. Size and configuration as indicated.

1. Polyvinyl Chloride Complying with ASTM D2287, General Purpose Grade, Designation PVC-63506.

a. Approved Manufacturers:

1) "AA2000-2001 Blocktite"; Hohmann & Barnard, Inc. (800-645-0616)

2) "Rapid Poly-Joint"; Dur-O-Wal, A Dayton Superior Company (800-323-0090)

B. Bond Breaker Strips: Asphalt-Saturated Organic Roofing Felt Complying with ASTM D226, Type I (No. 15 Asphalt Felt)

C. Weepholes: Provide the following for weepholes:

1. Cellular Plastic Weep/Vent: One-piece, flexible extrusion made from UV-resistant polypropylene copolymer, full height and width of head joint and depth 1/8 inch (3 mm) less than depth of outer wythe, in color selected from manufacturer's standard.

   a. Products:

      1) "Quadro-Vent Jumbo"; by Hohmann & Barnard, Inc.

      2) "Mortar Maze Weep Vent "; by Advanced Building Products Inc.

      3) "DA 1006 Cell Vent Jumbo"; by Dayton Superior Corporation, Dur-O-Wal Division

      4) "Cell Vent Jumbo"; by Wire-Bond;

2. Size: 3/8-inch x 3-3/8-inch x 3-1/2-inch

D. Reinforcing Bar Positioners: Wire units designed to fit into mortar bed joints spanning masonry unit cells with loops for holding reinforcing bars in center of cells. Units shall be formed from 0.187-inch steel wire, hot-dip galvanized after fabrication.

1. Provide units with either two loops or four loops as needed for number of bars indicated.

2. Approved Manufacturers:

   a. "D/A 811"; Dur-O-Wal, A Dayton Superior Company (800-323-0090)

   b. "D/A 816"; Dur-O-Wal, A Dayton Superior Company (800-323-0090)

   c. "#RB Rebar Positioner"; Hohmann & Barnard, Inc. (800-645-0616)

   d. "#RB-Twin Rebar Positioner"; Hohmann & Barnard, Inc. (800-645-0616)

E. Cavity Drainage Material: 2-inch thick, free-draining mesh; made from polyethylene strands and shaped to avoid being clogged by mortar droppings.

1. Approved Manufacturers:

   a. "Mortar Break"; Advanced Building Products, Inc. (800-252-2306)

   b. "CavClear Masonry Mat"; CavClear / Archovations, Inc. (715-381-5773)

   c. "Mortar Net"; Mortar Net USA, Ltd. (800-664-6638)

F. Flashings:

1. Refer to Section 07 62 00 – Sheet Metal Flashing & Trim for flashing materials.

G. Flashing Termination Drip Plates

1. Approved Manufacturers:

   a. "Foam-Tite Seal Model No.FTSA"; Hohmann & Barnard, Inc. (800-645-0616)

H. Anchor Bolts: Provide steel bolts wit hex nuts and flat washers complying with ASTM A307, Grade A, hot-dip galvanized to comply with ASTM C153, Class C, in sizes and configuration indicated.

1.07 MASONRY CLEANERS

A. Proprietary Acidic Cleaner: Manufacturer's standard strength general purpose cleaner designed for removing mortar/grout stains, efflorescence, and other new construction stains from new masonry surfaces of type indicated; composed of blended organic and inorganic acids combined with special wetting systems and inhibitors; expressly approved for intended use by manufacturer of masonry units being cleaned without damaging or discoloring masonry surfaces.

B. Approved Manufacturers:

1. "Sure Klean No. 600 Detergent"; ProSoCo, Inc. (800-255-4255)

2. "202 New Masonry Detergent"; Diedrich Technologies, Inc. (800-323-3565)

1.08 MORTAR AND GROUT MIXES

A. General: Do not use admixtures, including coloring pigments, air-entraining agents, accelerators, retarders, water repellent agents, anti-freeze compounds or other admixtures, unless otherwise indicated.

1. Do not use calcium chloride in mortar or grout.

B. Mixing: Combine and thoroughly mix cementitious, water and aggregates in a mechanical batch mixer; comply with referenced ASTM standards for mixing time and water content.

C. Mortar for Unit Masonry: Comply with ASTM C270, Proportion Specification, for types of mortar required, unless otherwise indicated.

1. Use Type mortar as shown on Drawings.

a. Minimum compressive strength as shown on Drawings.

2. For masonry below grade, in contact with earth, and where indicated, use Type - S.

3. For reinforced masonry and where indicated, use Type - S

4. For exterior, above-grade, load-bearing and non-load-bearing walls and parapet walls; for interior load-bearing walls; for interior non-load-bearing partitions; and for other applications where another type is not indicated, use Type – S.

D. Colored Pigmented Mortar: Select and Proportion pigments with other ingredients to produce color required. Do not exceed pigment-to-cement ratio of 1-to-10, by weight. Color as selected by Architect.

E. Grout for Unit Masonry: Comply with ASTM C476.

1. Use grout of type indicated or, if not otherwise indicated, of type (fine or coarse) that will comply with Table 1.15.1 in ACI 530.1/ASCE 6/TMS 602 for dimensions of grout spaces and pour height.

2. Proportion grout in accordance with ASTM C 476, Table 1 or paragraph 4.2.2 for specified 28-day compressive strength indicated, but not less than 2500 psi .

1.09 SOURCE QUALITY CONTROL

A. Contractor will engage a qualified independent testing agency to perform source quality-control testing indicated below:

1. Payment for these services will be made Contractor using a Testing Agency as approved the Architect.

2. Retesting of materials failing to meet specified requirements shall be done at Contractor's expense.

B. Concrete Masonry Unit Tests: For each type of concrete masonry unit indicated, units will be tested according to ASTM C140.

PART 2 EXECUTION

2.01 EXAMINATION

A. Examine conditions, with Installer present, for compliance with requirements for installation tolerances and other conditions affecting performance.

1. Verify that foundations are within tolerances specified.

2. Verify that reinforcing dowels are properly placed.

3. Proceed with installation only after unsatisfactory conditions have been corrected.

B. Before installation, examine rough-in and built-in construction to verify actual locations of piping connections.

2.02 INSTALLATION - GENERAL

A. Do not wet concrete masonry units.

B. Cleaning Reinforcing: Before placing, remove loose rust, ice and other coatings from reinforcing.

C. Thickness: Build cavity and composite walls, floors and other masonry construction to the full thickness shown. Build single-wythe walls (if any) to the actual thickness of the masonry units, using units of nominal thickness indicated.

D. Build chases and recesses to accommodate items specified in this Section or in other sections of the Specifications as shown or required. Provide not less than 8" of masonry between chase or recess and jamb of openings, and between adjacent chases and recesses.

E. Leave openings for equipment to be installed before completion of masonry work. After installation of equipment, complete masonry work to match work immediately adjacent to the opening.

F. Cut masonry units using motor-driven saws to provide clean, sharp, unchipped edges. Cut units as required to provide continuous pattern and to fit adjoining work. Use full-size units without cutting where possible.

1. Use dry cutting saws to cut concrete masonry units.

G. Select and arrange units for exposed unit masonry to provide a uniform blend of colors and textures.

H. Matching Existing Masonry: Match coursing, bonding, color, and texture of existing masonry.

2.03 CONSTRUCTION TOLERANCES

A. Comply with tolerances in ACI 530-1/ASCE 6/TMS 602 and the following:

1. Variation from Plumb: For vertical lines and surfaces of columns, walls and arises do not exceed 1/4" in 10', or 3/8" in a story height not to exceed 20'. For external corners, expansion joints, control joints and other conspicuous lines, do not exceed 1/4" in any story or 20' maximum, nor 1/2" in 40' or more. For vertical alignment of head joints, do not exceed plus or minus 1/4" in 10'.

2. Variation from Level: For bed joints and lines of exposed lintels, sills, parapets, horizontal grooves and other conspicuous lines, do not exceed 1/4" in any bay or 20' maximum, nor 1/2" in 40' or more. For top surface of bearing walls, do not exceed 1/8" between adjacent floor elements in 10' or 1/16" within width of a single unit.

3. Variation of Linear Building Line: For position shown in plan and related portion of columns, walls and partitions, do not exceed 1/2" in any bay or 20' maximum, nor 3/4" in 40' or more.

4. Variation in Mortar Joint Thickness: Do not exceed bed joint thickness indicated by more than plus or minus 1/8", with a maximum thickness limited to 1/2". Do not exceed head joint thickness indicated by more than plus or minus 1/8".

2.04 LAYING MASONRY WALLS

A. Lay out walls in advance for accurate spacing of surface bond patterns with uniform joint thicknesses and to accurately locate openings, movement-type joints, returns and offsets. Avoid the use of less-than-half-size units at corners, jambs and wherever possible at other locations.

B. Lay-up walls to comply with specified construction tolerances, with courses accurately spaced and coordinated with other work.

C. Bond Pattern: Lay exposed masonry in the bond pattern shown or, if not shown, lay in running bond with vertical joint in each course centered on units in courses above and below. Lay concealed masonry with all units in a wythe in running bond or bonded by lapping not less than 2". Bond and interlock each course of each wythe at corners. Do not use units with less that nominal 4" horizontal face dimensions at corners or jambs.

D. Stopping and Resuming Work: In each course, rack back 1/2-unit length for 1/2-running bond or 1/3-unit length for 1/3 running bond; do not tooth. Clean exposed surfaces of set masonry, wet clay units lightly (if required) and remove loose masonry units and mortar prior to laying fresh masonry.

E. Built-in Work: As construction progresses, build-in items specified under this and other Sections of these Specifications. Fill in solidly with masonry around built-in items.

1. Fill space between hollow metal frames and masonry solidly with mortar, unless otherwise indicated.

2. Where built-in items are to be embedded in cores of hollow masonry units, place a layer of metal lath in the joint below and rod mortar or grout into core.

3. Fill cores in hollow concrete masonry units with grout 24" under bearing plates, beams, lintels, posts and similar items, unless otherwise indicated.

F. Build non-load-bearing interior partitions full height of story to underside of solid floor or roof structure above, unless otherwise indicated.

1. Install compressible filler in joint between top of partition and underside of structure above.

2. At fire-rated partitions, install firestopping in joint between top of partition and underside of structure above to comply with Division 07 Section "Firestopping."

2.05 MORTAR BEDDING AND JOINTING

A. Lay solid masonry units and brick units with completely filled bed and head joint; butter ends with sufficient mortar to fill head joints and shove into place. Do not slush head joints.

1. At cavity walls, bevel beds away from cavity, to minimize mortar protrusions into cavity. As work progresses, trowel mortar fins protruding into cavity flat against the cavity face of the brick.

B. Lay hollow concrete masonry units with full mortar coverage on horizontal and vertical face shells. Bed webs in mortar in starting course on footings and in all courses of piers, columns and pilasters, and where adjacent to cells or cavities to be reinforced or filled with concrete or grout. For starting course on footings where cells are not grouted, spread out full mortar bed including areas under cells.

C. Maintain joint widths shown, except for minor variations required to maintain bond alignment. If not shown, lay walls with 3/8" joints.

D. Cut joints flush for masonry walls which are to be concealed or to be covered by other materials, unless otherwise indicated.

E. All exposed joints shall be well-tooled to a concave or rodded profile, unless otherwise indicated.

1. Provide raked joints at all vertical scores in scored brick units. Strike to match concave or rodded profile of horizontal joints.

2. Rake-out expansion joints and joints indicated on Drawings to receive sealant.

F. Mortar joints shall be struck at a consistent time interval when mortar is at the same medium stiff consistency in order to minimize color variations.

G. Remove masonry units disturbed after laying; clean and reset in fresh mortar. Do not pound corners or jambs to shift adjacent stretcher units which have been set in position. If adjustments are required, remove units, clean off mortar and reset in fresh mortar.

H. Collar Joints: After each course is laid, fill the vertical longitudinal joint between wythes solidly and with mortar for the following masonry work:

1. All exterior walls, except cavity walls, and interior walls and partitions.

I. Use continuous horizontal joint reinforcement installed in horizontal mortar joints for bond tie between wythes. Install at not more than 16" o.c. vertically.

J. Corners: Provide interlocking masonry unit bond in each course at corners, unless otherwise shown.

K. Intersecting and Abutting Walls: Unless vertical expansion or control joints are shown at juncture, provide same type of bonding specified for structural bonding between wythes and space as follows:

1. Provide individual metal ties at not more than 24" o.c. vertically.

L. Provide weep holes in exterior wythe of cavity wall located immediately above ledges and flashing, spaced 2'-0" o.c., unless otherwise indicated.

2.06 CAVITIES

A. Keep cavities clean of mortar droppings and other materials during construction.

1. Install Cavity Drainage Material in cavities in accordance with manufacturer's recommendations.

2. Use wood strips temporarily placed in cavity to collect mortar droppings. As work progresses, remove strips, clean off mortar droppings, and replace in cavity.

B. Apply air barrier to face of backup wythe to comply with Section 07 20 00 - "Thermal Protection."

C. Installing Cavity-Wall Insulation: Place small dabs of adhesive, spaced approximately 12 inches o.c. both ways, on inside face of insulation boards, or attach with plastic fasteners designed for this purpose. Fit courses of insulation between wall ties and other confining obstructions in cavity, with edges butted tightly both ways. Press units firmly against inside wythe of masonry or other construction as shown.

1. Fill cracks and open gaps in insulation with crack sealer compatible with insulation and masonry.

2.07 MASONRY JOINT REINFORCEMENT

A. General: Provide continuous masonry joint reinforcement as indicated. Install longitudinal side rods in mortar for their entire length with a minimum cover of 5/8" on exterior side of walls. Lap reinforcing a minimum of 6".

B. Cut or interrupt joint reinforcement at control and expansion joints, unless otherwise indicated.

C. Reinforce walls with continuous horizontal joint reinforcing, unless specifically noted to be omitted.

D. Provide continuity at corners and wall intersections by use of prefabricated "L" and "T" sections. Cut and bend reinforcement units as directed by manufacturer for continuity at returns, offsets, column fireproofing, pipe enclosures and other special conditions.

E. Space continuous horizontal reinforcement as follows:

1. For multi-wythe walls (solid or cavity) which are structurally bonded by masonry headers or individual wire ties, space horizontal reinforcement 24" o.c. vertically.

2. For single-wythe walls, space reinforcement at 16" o.c. vertically, unless otherwise indicated.

3. For parapets, space reinforcement at 8" o.c. vertically, unless otherwise indicated.

F. Reinforce masonry openings greater than 1'-0" wide, with horizontal joint reinforcement placed in 2 horizontal joints approximately 8" apart, immediately above the lintel and immediately below the sill. Extend reinforcement a minimum of 2'-0" beyond jambs of the opening, except at control joints.

1. In addition to wall reinforcement, provide additional reinforcement at openings as required to comply with the above.

2.08 ANCHORING MASONRY WORK

A. General: Provide anchor devices of type indicated.

B. Anchor single wythe masonry veneer to metal studs with masonry veneer anchors to comply with the following requirements:

1. Fasten each anchor section through sheathing to metal studs with two metal fasteners of type indicated.

2. Embed tie section in masonry joints. Provide not less than 1" air space between back of masonry veneer wythe and face of sheathing.

3. Locate anchor section relative to course in which tie section is embedded to allow maximum vertical differential movement of tie up and down.

4. Space anchors as indicated, but not more than 16" o.c. vertically and 24" o.c. horizontally. Install additional anchors within 1'-0" of openings and at intervals around perimeter not exceeding 3'-0".

C. Anchor masonry to structural members where masonry abuts or faces structural members to comply with the following:

1. Provide an open space not less than 1 inch in width between masonry and structural member, unless otherwise indicated. Keep open space free of mortar or other rigid materials.

2. Anchor masonry to structural members with flexible anchors embedded in masonry joints and attached to structure.

3. Space anchors as indicated, but not more than 24 inches o.c. vertically and 36 inches o.c. horizontally.

D. Anchor masonry veneers to concrete and masonry backup with masonry-veneer anchors to comply with the following requirements:

1. Fasten anchors to concrete and masonry backup with metal fasteners of type indicated.

2. Embed connector sections and continuous wire in masonry joints. Provide not less than 2 inches of air space between back of masonry veneer and face of sheathing.

3. Locate anchor sections to allow maximum vertical differential movement of ties up and down.

4. Space anchors as indicated, but not more than 16 inches o.c. vertically and 32 inches o.c. horizontally with not less than 1 anchor for each 3.5 sq ft. of wall area. Install additional anchors within 12 inches of openings and at intervals, not exceeding 36 inches, around perimeter.

2.09 CONTROL AND EXPANSION JOINTS

A. General: Provide vertical and horizontal expansion, control and isolation joints in masonry where shown. Build-in related items as the masonry work progresses.

B. Control Joint Spacing: If location of control joints is not shown, place vertical joints spaced not to exceed 30'-0" o.c. for concrete masonry wythes if reinforced, or 20'-0" o.c. if not reinforced. Locate control joints at points of natural weakness in the masonry work.

C. Build-in non-metallic joint fillers where indicated.

2.10 LINTELS

A. Provide masonry lintels where shown and wherever openings of more than 2'-0" for block size units or more than 1'-0" for brick size units are shown without structural steel or other supporting lintels.

B. Provide minimum bearing of 8" at each jamb, unless otherwise indicated.

2.11 FLASHING OF MASONRY WORK

A. General: Provide concealed flashing in masonry work at, or above, shelf angles, lintels, ledges and other obstructions to the downward flow of water in the wall so as to divert such water to the exterior. Prepare masonry surfaces smooth and free from projections which could puncture flashing. Place through-wall flashing on sloping bed of mortar and cover with mortar. Seal penetrations in flashing with mastic before covering with mortar. Extend flashings through exterior face of masonry and turn down to form drip.

1. Refer to Division 07 Specification Sections for flashing materials.

B. Extend flashing the full length of lintels and shelf angles and minimum of 4" into masonry each end. Extend flashing from exterior face of outer wythe of masonry, through the outer wythe, turned up a minimum of 4", and through the inner wythe to within 1/2" of the interior face of the wall in exposed work. Where interior surface of inner wythe is concealed by furring, carry flashing completely through the inner wythe and turn up approximately 2". At heads and sills, turn up ends not less than 2" to form a pan. Extend flashing on exterior to 1/4 inch past wall surface. Do **NOT** cut flush with wall.

C. Install flashing to comply with manufacturer's instructions.

D. Install weep holes in the exterior widths of the head joints of the first course of masonry immediately above embedded flashings. Space 32" o.c. unless otherwise indicated.

2.12 REPAIRING, POINTING, AND CLEANING

A. Remove and replace masonry units which are loose, chipped, broken, stained or otherwise damaged, or if units do not match adjoining units as intended. Install new units to match adjoining units and install in fresh mortar or grout, pointed to eliminate evidence of replacement.

B. Pointing: During the tooling of joints, enlarge any voids or holes, except weep holes, and completely fill with mortar. Point-up all joints including corners, openings and adjacent work to provide a neat, uniform appearance, prepared for application of sealants.

C. Final Cleaning: After mortar is thoroughly set and cured, clean masonry as follows:

1. Remove large mortar particles by hand with wooden paddles and non-metallic scrape hoes or chisels.
2. Test cleaning methods on sample wall panel. Leave 1/2 panel uncleaned for comparison purposes. Obtain Architect's approval of sample cleaning before proceeding with cleaning of masonry.
3. Protect adjacent stone and non-masonry surfaces from contact with cleaner by covering them with liquid strippable masking agent, polyethylene film or waterproof masking tape.
4. Clean concrete unit masonry to comply with masonry manufacturer's directions and applicable NCMA "Tek" bulletins.

D. Cleaning Ground Faced Masonry Units: After laying ground faced masonry units, wipe off excess mortar with a soft cloth. Clean exposed surfaces with a manufacturer's recommended detergent masonry cleaner and rinse with water, as recommended by the masonry unit manufacturer. Acid or acid based cleaning agents, abrasive tools or powder, or metal cleaning tools and brushes are not permitted.

2.13 PROTECTION

A. Provide final protection and maintain conditions in a manner acceptable to Installer, which ensures unit masonry work being without damage and deterioration at time of substantial completion.

END OF SECTION 04 20 00

SECTION 05 12 00
STRUCTURAL STEEL FRAMING

PART 1 GENERAL

1.01 RELATED DOCUMENTS

A. Drawings and general provisions of the Contract, including General and Supplementary Conditions and Division 01 Specification Sections, apply to this Section.

1.02 SUMMARY

A. Section Includes:

1. Structural steel.
2. Grout for baseplates and bearing plates.

B. Related Sections:

1. Division 01 Section "Quality Requirements" for independent testing agency procedures and administrative requirements.
2. Division 03 Section "Cast-in-Place Concrete" for setting anchor rods and embedded plates in concrete.
3. Division 05 Section "Architecturally Exposed Structural Steel Framing" for additional requirements for architecturally exposed structural steel.
4. Division 05 Section "Steel Decking" for field installation of shear connectors through deck.
5. Division 05 Section Cold-formed metal framing.
6. Division 05 Section "Metal Fabrications" for steel lintels and shelf angles not attached to structural-steel frame, miscellaneous steel fabrications and other metal items not defined as structural steel.
7. Division 05 Section "Metal Stairs."
8. Division 07 Section Sprayed-on fireproofing.
9. Division 09 painting Sections for surface-preparation, priming requirements and touch up painting.

1.03 DEFINITIONS

A. Structural Steel: Elements of structural-steel frame, as classified by AISC 303, "Code of Standard Practice for Steel Buildings and Bridges."

1.04 PERFORMANCE REQUIREMENTS

A. The drawings indicate typical connection details, specific connection details and/or connection details indicating design intent for the various connections locations required by the drawings. Simple connections may not be detailed on the drawings. The steel fabricator shall provide connection details of all connections including the connections not specifically detailed, following the intent of the drawings. The connection design shall be done under the supervision of a qualified professional engineer registered in the state that the project is located. The connections shall be designed for loads shown on the drawings. Where the reactions of beams and girders are not shown, the connections shall be designed to support the maximum allowable uniform loads as indicated in the load tables of the AISC Manual of Steel Construction for the given beam size and span. Double angle and single plate connections detailed in accordance to the AISC Manual of Steel Construction 13th edition are acceptable; single angle connections are not permitted.

1. Select and complete connections using schematic details indicated and AISC 360.

1.05 SUBMITTALS

A. Product Data: For each type of product indicated.

B. Shop Drawings:

1. Provide shop drawings including erection drawings and detail sheets of all structural steel components.

a. Erection drawings shall include at a minimum:

1) Anchor rod plans and embedment plans showing templates and directions for installation of anchor rods and other anchorages and embedded items to be installed by other.

2) Floor and roof plans.

3) Mezzanines, entrances, canopies and trellis.

4) Plans shall include member marks and all dimensions and elevations required to erect the structural steel.

5) Details and/or sections of all erections that include field welding, assembly, processes, field alignment, etc.

b. Detailed drawings of structural steel members and components, including at a minimum sizes, lengths, steel grade, primer paint, camber, cuts, copes, holes, dimensions, connection material, and other pertinent data.

c. For erection drawings and detail drawings.

1) Include details of cuts, connections, splices, camber, holes, and other pertinent data.

2) Indicate welds by standard AWS symbols, distinguishing between shop and field welds, and show size, length, and type of each weld. Show backing bars that are to be removed and supplemental fillet welds where backing bars are to remain.

3) Indicate type, size, and length of bolts, distinguishing between shop and field bolts. Identify pretensioned and slip-critical high-strength bolted connections.

4) Identify members and connections of the seismic-load-resisting system.

5) Indicate locations and dimensions of protected zones.

6) Identify demand critical welds.

2. The electronic files of the project's structural drawings will be provided upon request for use in the preparation of fabrication or erection drawings.

a. Prior to receiving the drawing files, the contractor is required to sign an "Agreement for Transfer and Use of Electronic Files."

b. The electronic files are not contract documents. Significant differences may exist between the electronic files and the corresponding hard copy documents due to addenda, change orders, revisions, layer visibility or other reasons. In the event of a conflict, printed hard copy drawings and specifications shall take precedence over electronic files. The Contractor is responsible to verify the accuracy of all data contained in the electronic files.

c. If the electronic files are imported into other software or applications packages for the purpose of preparing fabrication, erection, manufacturing drawings or any other type of document, the contractor shall verify all dimensions, lines, reference points,

etc. with annotated dimensions found elsewhere in the contract documents. The Contractor is responsible to adjust the file accordingly prior to their use of the files.

C. Qualification Data: For qualified Installer, fabricator, testing agency.

D. Welding certificates.

E. Paint Compatibility Certificates: From manufacturers of topcoats applied over shop primers, certifying that shop primers are compatible with topcoats.

F. Mill test reports for structural steel, including chemical and physical properties, to comply with ASTM A6 or ASTM A568.

G. Product Test Reports: For the following:

1. Bolts, nuts, and washers including mechanical properties and chemical analysis.
2. Direct-tension indicators.
3. Tension-control, high-strength bolt-nut-washer assemblies.
4. Shear stud connectors.
5. Shop primers.
6. Nonshrink grout.

H. Source quality-control reports.

1.06 QUALITY ASSURANCE

A. Welding Qualifications: Qualify procedures and personnel according to AWS D1.1/D1.1M, "Structural Welding Code - Steel."

1. Welders and welding operators performing work on bottom-flange, demand-critical welds shall pass the supplemental welder qualification testing, as required by AWS D1.8. FCAW-S and FCAW-G shall be considered separate processes for welding personnel qualification.

B. Inspection of welding shall comply with AWS D1.1 standards and IBC requirements.

C. Comply with applicable provisions of the following specifications and documents:

1. AISC 303.
2. AISC 335 Section A3.4.
3. AISC 341 and AISC 341s1.
4. AISC 360.
5. AISC LRFD Section A3.3.
6. AISC LRFD Section M2.5.
7. RCSC's "Specification for Structural Joints Using ASTM A 325 or A 490 Bolts."

D. Preinstallation Conference: Conduct conference at Project site.

1.07 DELIVERY, STORAGE, AND HANDLING

A. Store materials to permit easy access for inspection and identification. Keep steel members off ground and spaced by using pallets, dunnage, or other supports and spacers. Protect steel members and packaged materials from corrosion and deterioration.

1. Do not store materials on structure in a manner that might cause distortion, damage, or overload to members or supporting structures. Repair or replace damaged materials or structures as directed.

B. Store fasteners in a protected place in sealed containers with manufacturer's labels intact.

1. Fasteners may be repackaged provided Owner's testing and inspecting agency observes repackaging and seals containers.
2. Clean and relubricate bolts and nuts that become dry or rusty before use.
3. Comply with manufacturers' written recommendations for cleaning and lubricating ASTM F 1852 fasteners and for retesting fasteners after lubrication.

1.08 COORDINATION

A. Coordinate selection of shop primers with topcoats to be applied over them. Comply with paint and coating manufacturers' recommendations to ensure that shop primers and topcoats are compatible with one another.

B. Coordinate installation of anchorage items to be embedded in or attached to other construction without delaying the Work. Provide setting diagrams, sheet metal templates, instructions, and directions for installation.

PART 2 PRODUCTS

2.01 STRUCTURAL-STEEL MATERIALS

A. Recycled Content of Steel Products: Provide products with an average recycled content of steel products so postconsumer recycled content plus one-half of preconsumer recycled content is not less than 25 percent.

B. Recycled Content of Steel Products: Provide products with an average recycled content of steel products so postconsumer recycled content plus one-half of preconsumer recycled content is not less than the following:

1. W-Shapes: 60 percent.
2. Channels, Angles, M, S-Shapes: 60 percent.
3. Plate and Bar: 25 percent.
4. Cold-Formed Hollow Structural Sections: 25 percent.
5. Steel Pipe: 25 percent.
6. All Other Steel Materials: 25 percent.

C. W-Shapes and plate girders: ASTM A 992/A 992M Grade 50.

D. Channels, Angles, M, S-Shapes: ASTM A 36/A 36M.

E. Plate and Bar: ASTM A 36/A 36M or as noted on drawings.

F. Cold-Formed Hollow Structural Sections: ASTM A 500, Grade B, structural tubing.

G. Steel Pipe: ASTM A 53/A 53M, Type E or S, Grade B.

1. Finish: Black except where indicated to be galvanized.

H. Steel Castings: ASTM A 216/A 216M, Grade WCB with supplementary requirement S11.

I. Steel Forgings: ASTM A 668/A 668M.

J. Welding Electrodes: Comply with AWS requirements, AISC ASD Section A3.6 and AISC LRFD Section A3.5.

2.02 BOLTS, CONNECTORS, AND ANCHORS

A. High-Strength Bolts, Nuts, and Washers: ASTM A 325, Type 1, heavy-hex steel structural bolts; ASTM A 563, Grade C, heavy-hex carbon-steel nuts; and ASTM F 436 , Type 1, hardened carbon-steel washers; all with plain finish.

B. For bolts noted on drawings as A490 provide High-Strength Bolts, Nuts, and Washers: ASTM A 490, Type 1, heavy-hex steel structural bolts; ASTM A 563, Grade DH, heavy-hex carbon-steel nuts; and ASTM F 436, Type 1, hardened carbon-steel washers with plain finish.

C. Bolts, nuts and washers indicated to be galvanized on drawings shall be hot dipped galvanized per ASTM A153.

D. Shear Connectors: ASTM A 108, Grades 1015 through 1020, headed-stud type, cold-finished carbon steel; AWS D1.1/D1.1M, Type B.

E. Unheaded Anchor Rods: provide ASTM F 1554, Grade 36 unless noted otherwise as on drawings.

1. Configuration: Straight.

2. Nuts: ASTM A 563 heavy-hex carbon steel.

3. Plate Washers: ASTM A 36 carbon steel.

4. Washers: ASTM F 436, Type 1, hardened carbon steel.

5. Finish: Plain, if noted on drawings to be galvanized, provide anchor rods, plates, nuts and washers hot dipped galvanized per ASTM A153, class C.

F. Threaded Rods: ASTM A 36.

1. Nuts: ASTM A 563 heavy-hex carbon steel.

2. Washers: ASTM F 436, Type 1, hardened carbon steel.

3. Finish: Plain.

G. Eye Bolts and Nuts: Made from cold-finished carbon steel bars, ASTM A 108, Grade 1030.

H. Sleeve Nuts: Made from cold-finished carbon steel bars, ASTM A 108, Grade 1018.

2.03 PRIMER

A. Primer: Fabricator's standard lead- and chromate-free, nonasphaltic, rust-inhibiting primer complying with MPI#79 and compatible with topcoat see General notes for primer color.

B. Galvanizing Repair Paint: MPI#18, MPI#19, or SSPC-Paint 20.

2.04 GROUT

A. Nonmetallic, Shrinkage-Resistant Grout: ASTM C 1107, factory-packaged, nonmetallic aggregate grout, noncorrosive and nonstaining, mixed with water to consistency suitable for application and a 30-minute working time.

2.05 FABRICATION

A. Structural Steel: Fabricate and assemble in shop to greatest extent possible. Fabricate according to AISC's "Code of Standard Practice for Steel Buildings and Bridges" and AISC 360.

1. Camber structural-steel members where indicated.

2. Fabricate beams with rolling camber up.

3. Identify high-strength structural steel according to ASTM A 6/A 6M and maintain markings until structural steel has been erected.

4. Mark and match-mark materials for field assembly.

5. Complete structural-steel assemblies, including welding of units, before starting shop-priming operations.

B. Thermal Cutting: Perform thermal cutting by machine to greatest extent possible.

1. Plane thermally cut edges to be welded to comply with requirements in AWS D1.1/D1.1M.

C. Bolt Holes: Cut, drill, or punch standard bolt holes perpendicular to metal surfaces.

D. Finishing: Accurately finish ends of columns and other members transmitting bearing loads.

E. Cleaning: Clean and prepare steel surfaces that are to remain unpainted according to SSPC-SP 3, "Power Tool Cleaning."

F. Shear Connectors: Prepare steel surfaces as recommended by manufacturer of shear connectors. Use automatic end welding of headed-stud shear connectors according to AWS D1.1/D1.1M and manufacturer's written instructions.

G. Holes: Provide holes required for securing other work to structural steel and for other work to pass through steel framing members.

1. Cut, drill, or punch holes perpendicular to steel surfaces. Do not thermally cut bolt holes or enlarge holes by burning.

2. Baseplate Holes: Cut, drill, mechanically thermal cut, or punch holes perpendicular to steel surfaces.

3. Weld threaded nuts to framing and other specialty items indicated to receive other work.

H. Equipment Supports and Mechanical Opening Framing: Framing shown on structural drawings is for general arrangement only and may require modification to suit the actual purchased equipment. Coordinate with mechanical trades for necessary certified drawings before starting fabrication. Steel Fabricator shall provide a complete job ready for installation of equipment, and Contract price shall cover this requirement regardless of subsequent modifications to framing shown on drawings, at no extra cost to the Owner.

2.06 SHOP CONNECTIONS

A. High-Strength Bolts: Shop install high-strength bolts according to RCSC's "Specification for Structural Joints Using ASTM A 325 or A 490 Bolts" for type of bolt and type of joint specified.

1. Joint Type: Snug tightened and slip critical where indicated on the drawings.

B. Weld Connections: Comply with AWS D1.1/D1.1M (Structural welding code) and AWS D1.8/D1.8M (Structural welding code, Seismic Supplement) for tolerances, appearances, welding procedure specifications, weld quality, and methods used in correcting welding work.

1. Assemble and weld built-up sections by methods that will maintain true alignment of axes without exceeding tolerances in AISC 303 for mill material.

2.07 SHOP PRIMING

A. Shop prime steel surfaces except the following:

1. Surfaces embedded in concrete or mortar. Extend priming of partially embedded members to a depth of 2 inches.

2. Surfaces to be field welded.

3. Surfaces to be high-strength bolted with slip-critical connections.

4. Surfaces to receive sprayed fire-resistive materials (applied fireproofing).

5. Galvanized surfaces.

B. Surface Preparation: Clean surfaces to be painted. Remove loose rust and mill scale and spatter, slag, or flux deposits. Prepare surfaces according to the following specifications and standards:

1. All interior steel exposed to view SSPC – SP6 commercial blast cleaned.

2. All exterior steel exposed to weather SSPC – SP10/NACE No. 2 near white blast cleaned.

3. All other steel SSPC – SP3 power tool cleaned.

4. SSPC-SP 6/NACE No. 3, "Commercial Blast Cleaning" for architecturally exposed steel.

C. Priming: Immediately after surface preparation, apply primer according to manufacturer's written instructions and at rate recommended by SSPC to provide a minimum dry film thickness of 1.5 mils. Use priming methods that result in full coverage of joints, corners, edges, and exposed surfaces.

2.08 GALVANIZING

A. Hot-Dip Galvanized Finish: Apply zinc coating by the hot-dip process to structural steel indicated on drawings according to ASTM A 123/A 123M.

1. Fill vent and drain holes that will be exposed in the finished Work unless they will function as weep holes, by plugging with zinc solder and filing off smooth.

2.09 SOURCE QUALITY CONTROL

A. Testing Agency: Owner will engage a special inspector and qualified testing and inspecting agency to perform shop tests and inspections and prepare test reports.

1. Provide special inspector and testing agency with access to places where structural-steel work is being fabricated or produced to perform tests and inspections.

B. Correct deficiencies in Work that test reports and inspections indicate does not comply with the Contract Documents.

C. Bolted Connections: Shop-bolted connections will be inspected according to RCSC's "Specification for Structural Joints Using ASTM A 325 or A 490 Bolts."

D. Welded Connections: all shop welded connections shall be visually inspected according to AWS D1.1/D1.1M.

E. In addition to visual inspection, complete penetration shop-welded connections will be tested and inspected according to AWS D1.1/D1.1M by ultrasonic inspection procedures per ASTM E164.

F. In addition to visual inspection, shop-welded shear connectors will be tested and inspected according to requirements in AWS D1.1/D1.1M for stud welding and as follows:

1. Bend tests will be performed if visual inspections reveal either a less-than-continuous 360-degree flash or welding repairs to any shear connector.

G. Required special inspection and verification, as outlined in IBC Table 1704.3.

1. Material verification of high strength bolts, nuts and washers.

2. Inspection of high strength bolting.

3. Material verification of steel.

4. Review of welders' certification.

5. Material verification of weld filler material.

6. Inspection of welding.

7. Inspection of joint details.

PART 3 EXECUTION

3.01 EXAMINATION

A. Verify, with steel Erector present, elevations of concrete- and masonry-bearing surfaces and locations of anchor rods, bearing plates, and other embedments for compliance with requirements.

1. Prepare a certified survey of bearing surfaces, anchor rods, bearing plates, and other embedments showing dimensions, locations, angles, and elevations.

B. Proceed with installation only after unsatisfactory conditions have been corrected.

3.02 PREPARATION

A. Provide temporary shores, guys, braces, and other supports during erection to keep structural steel secure, plumb, and in alignment against temporary construction loads and loads equal in intensity to design loads. Remove temporary supports when permanent structural steel, connections, and bracing are in place unless otherwise indicated.

3.03 ERECTION

A. Set structural steel accurately in locations and to elevations indicated and according to AISC 303 and AISC 360.

B. Base, Bearing and Leveling Plates: Clean concrete- and masonry-bearing surfaces of bond-reducing materials, and roughen surfaces prior to setting plates. Clean bottom surface of plates.

1. Set plates for structural members on wedges, shims, or setting nuts as required.

2. Weld plate washers to top of baseplate.

3. Snug-tighten anchor rods after supported members have been positioned and plumbed. Do not remove wedges or shims but, if protruding, cut off flush with edge of plate before packing with grout.

4. Promptly pack grout solidly between bearing surfaces and plates so no voids remain. Neatly finish exposed surfaces; protect grout and allow to cure. Comply with manufacturer's written installation instructions for shrinkage-resistant grouts.

C. Maintain erection tolerances of structural steel within AISC's "Code of Standard Practice for Steel Buildings and Bridges."

D. Align and adjust various members that form part of complete frame or structure before permanently fastening. Before assembly, clean bearing surfaces and other surfaces that will be in permanent contact with members. Perform necessary adjustments to compensate for discrepancies in elevations and alignment.

1. Level and plumb individual members of structure.

2. Make allowances for difference between temperature at time of erection and mean temperature when structure is completed and in service.

E. Splice members only where indicated.

F. Do not use thermal cutting during erection.

G. Do not enlarge unfair holes in members by burning or using drift pins. Ream holes that must be enlarged to admit bolts.

3.04 FIELD CONNECTIONS

A. High-Strength Bolts: Install high-strength bolts according to RCSC's "Specification for Structural Joints Using ASTM A 325 or A 490 Bolts" for type of bolt and type of joint specified.

1. Snug tight joints (bearing bolts) shall be tightened such that all plies are brought into firm contact only. This is attained with a few impacts of an impact wrench or the full effort of an ironworker using an ordinary spud wrench. Do not over-tighten bearing bolts.

2. Slip critical bolts shall be tightened in accordance with AISC by the turn of the nut method, by the direct tension indicator or by properly calibrated wrenches.

B. Weld Connections: Comply with AWS D1.1/D1.1M (Structural welding code) and AWS D1.8/D1.8M (Structural welding code, Seismic Supplement) for tolerances, appearances, welding procedure specifications, weld quality, and methods used in correcting welding work.

1. Comply with AISC 303 and AISC 360 for bearing, alignment, adequacy of temporary connections, and removal of paint on surfaces adjacent to field welds.

2. Remove backing bars or runoff tabs where indicated, back gouge, and grind steel smooth.

3. Assemble and weld built-up sections by methods that will maintain true alignment of axes without exceeding tolerances in AISC's "Code of Standard Practice for Steel Buildings and Bridges" for mill material.

3.05 FIELD QUALITY CONTROL

A. Testing Agency: Owner will engage a special inspector and qualified independent testing and inspecting agency to perform tests and inspections of field welds and high-strength bolted connections and prepare the necessary reports.

B. Required special inspection and verification as outlined in IBC Table 1704.3.

1. Material verification of high strength bolts, nuts and washers.

2. Inspection of high strength bolting.

3. Material verification of steel.

4. Review of welders' certification.

5. Material verification of weld filler material.

6. Inspection of welding. Inspection of joint details.

C. Bolted Connections: Bolted connections will be tested and inspected according to RCSC's "Specification for Structural Joints Using ASTM A 325 or A 490 Bolts." Non slip-critical connection require only visual inspection. Slip critical connections require inspection to conform with AISC specifications for the method of tightening selected. Contractor shall discuss with the Engineer prior to erection.

D. Welded Connections: All field welds will be visually inspected according to AWS D1.1/D1.1M.

1. In addition to visual inspection, full penetration field welds will be tested and inspected according to AWS D1.1/D1.1M by ultrasonic inspection procedures, per ASTM E164

E. In addition to visual inspection, test and inspect field-welded shear connectors according to requirements in AWS D1.1/D1.1M for stud welding and as follows:

1. Perform bend tests if visual inspections reveal either a less-than-continuous 360-degree flash or welding repairs to any shear connector.

2. Conduct tests on additional shear connectors if weld fracture occurs on shear connectors already tested, according to requirements in AWS D1.1/D1.1M.

F. Correct deficiencies in Work that test reports and inspections indicate does not comply with the Contract Documents.

3.06 REPAIRS AND PROTECTION

A. Galvanized Surfaces: Clean areas where galvanizing is damaged or missing and repair galvanizing to comply with ASTM A 780.

B. Touchup Painting: Immediately after erection, clean exposed areas where primer is damaged or missing and paint with the same material as used for shop painting to comply with SSPC-PA 1 for touching up shop-painted surfaces.

1. Clean and prepare surfaces by SSPC-SP 2 hand-tool cleaning or SSPC-SP 3 power-tool cleaning.

C. Touchup Painting: Cleaning and touchup painting are specified in Division 09 painting Sections.

END OF SECTION 05 12 00

SECTION 05 50 00
METAL FABRICATIONS

PART 1 GENERAL

1.01 SUMMARY

A. Section Includes:

1. Loose Bearing and Leveling Plates
2. Loose Steel Lintels
3. Ladders:
   a. Pit Ladder
4. Steel Framing and Supports for Applications where framing and supports are not specified in other Sections

B. Related Sections:

1. Section 03 30 00 – Cast-in-Place Concrete
2. Section 05 52 00 – Metal Railings
3. Section 09 90 00 - Painting

1.02 REFERENCES

A. ASTM International Publications:

1. A27 "Standard Specification for Steel Castings, Carbon, for General Application"
2. A36 "Standard Specification for Carbon Structural Steel".
3. A47 "Standard Specification for Ferritic Malleable Iron Castings"
4. A48 "Standard Specification for Gray Iron Castings"
5. A53 "Standard Specification for Pipe, Steel, Black and Hot-Dipped, Zinc-Coated, Welded and Seamless"
6. A123 "Standard Specification for Zinc (Hot-Dip Galvanized) Coatings on Iron and Steel Products"
7. A153 "Standard Specification for Zinc Coating (Hot-Dip) on Iron and Steel Hardware"
8. A307 "Standard Specification for Carbon Steel Bolts and Studs, 60 000 PSI Tensile Strength"
9. A563 "Standard Specification for Carbon and Alloy Steel Nuts"
10. A615 "Standard Specification for Deformed and Plain Billet-Steel Bars for Concrete Reinforcement"
11. A780 "Standard Practice for Repair of Damaged and Uncoated Areas of Hot-Dip Galvanized Coatings"
12. B633 "Standard Specification for Electrodeposited Coatings of Zinc on Iron and Steel"
13. C1107 "Standard Specification for Packaged Dry, Hydraulic-Cement Grout (Nonshrink)"
14. E488 "Standard Test Methods for Strength of Anchors in Concrete and Masonry Elements"
15. F593 "Standard Specification for Stainless Steel Bolts, Hex Cap Screws, and Studs"
16. F594 "Standard Specification for Stainless Steel Nuts"

17. F1554 "Standard Specification for Anchor Bolts, Steel, 36, 55, and 105-ksi Yield Strength"

B. Federal Specifications (FS) Publications:

1. FS B 588 "Bolt, Toggle: And Expansion Sleeve, Screw" (Cancelled)
2. FS FF S 325
3. FS FF BS75
4. FS TT P664 - Paint 25 (superceeds FS TT-P-664), Zinc Oxide, Alkyd, Linseed Oil Primer for Use Over Hand Cleaned Steel"
5. DOD-P-21035A (formerly MIL-P-21035), Galvanizing Repair Specification

C. The American Society of Mechanical Engineers (ASME) Publications:

1. A17.1 "Handbook on Safety Code for Elevators and Escalators"
2. B18.2.1 "Square and Hex Bolts and Screws, Inch Series"
3. B18.6.1 "Wood Screws (Inch Series)"
4. B18.6.3 "Machine Screws and Machine Screw Nuts"
5. B18.21.1 "Lock Washers (Inch Series)"
6. B18.22.1 "Plain Washers"

D. American Welding Society (AWS) Publications:

1. D1.1 "Structural Welding Code - Steel"
2. D1.2 "Structural Welding Code--Aluminum"
3. D1.3 "Structural Welding Code - Sheet Steel"

E. National Association of Architectural Metal Manufacturers (NAAMM) Publications:

1. "Metal Finishes Manual"
2. "Metal Stairs Manual"

F. The Society for Protective Coatings (SSPC) Publications:

1. SP - Surface Preparation Standards and Specifications
   a. SP 3 "Power Tool Cleaning"
2. PA - Paint Application Standards, Guides, and Specifications
   a. PA 1 "Shop, Field, and Maintenance Painting of Steel"
3. Paint - Paint and Coating Standards and Specifications
   a. Paint 12, Cold-Applied Asphalt Mastic (Extra Thick Film)
   b. Paint 20 "Zinc-Rich Coating, Type I - Inorganic and Type II - Organic"
   c. Paint 25 (superceeds FS TT-P-664), Zinc Oxide, Alkyd, Linseed Oil Primer for Use Over Hand Cleaned Steel"

1.03 SYSTEM DESCRIPTION

A. System Performance Requirements:

1. Ladders: Comply with ANSI A14.3.

1.04 SUBMITTALS

A. General: Submit the following in accordance with Conditions of Contract and Division 01 Specification Sections:

1. Include supporting product data for products used in miscellaneous metal fabrications, including paint products and grout.

2. Submit Shop Drawings detailing fabrication and erection of each metal fabrication indicated. Include plans, elevations, sections, and details of metal fabrications and their connections. Show anchorage and accessory items. Provide templates for anchors and bolts specified for installation under other sections.

3. Submit samples representative of materials and finished products as may be requested by Architect.

1.05 QUALITY ASSURANCE

A. Fabricator Qualifications: Firm experienced in successfully producing metal fabrications similar to that indicated for this Project, with sufficient production capacity to produce required units without causing delay in the Work.

B. Installer Qualifications: Arrange for installation of metal fabrications specified in this Section by same firm that fabricated them.

C. Quality welding processes and welding operators in accordance with the following:

1. AWS D1.1 "Structural Welding Code - Steel"

2. AWS D1.3 "Structural Welding Code - Sheet Steel"

3. AWS D1.2 "Structural Welding Code - Aluminum"

D. Certify that each welder has satisfactorily passed AWS qualification tests for welding processes involved and, if pertinent, has undergone recertification.

1.06 PROJECT/SITE CONDITIONS

A. Field Measurements: Check actual locations of walls and other construction to which metal fabrications must fit, by accurate field measurements before fabrication; show recorded measurements on final shop drawings. Coordinate fabrication schedule with construction progress to avoid delay of Work.

1.07 COORDINATION

A. Coordinate installation of anchorages for metal fabrications. Furnish setting drawings, templates, and directions for installing anchorages, including sleeves, concrete inserts, anchor bolts, and items with integral anchors, that are to be embedded in concrete or masonry. Deliver such items to Project site in time for installation.

PART 2 PRODUCTS

2.01 FERROUS METALS

A. Steel Plates, Shapes, and Bars: ASTM A36

B. Steel Tubing: Cold-formed steel tubing complying with ASTM A500.

C. Steel Pipe: ASTM A53

1. Black finish, unless otherwise indicated.

2. Galvanized finish for exterior installations, unless shown to receive special coatings.

3. Type E, OR S, Grade B, Fy = 35 KSI, unless otherwise indicated, or another weight, type, and grade required by structural loads.

D. Gray Iron Castings: ASTM A48, Class 30

E. Malleable Iron Castings: ASTM A47, Grade 32510

F. Brackets, Flanges and Anchors: Cast or formed metal of the same type material and finish as supported rails, unless otherwise indicated.

G. Concrete Inserts: Threaded or wedge type; galvanized ferrous castings, either malleable iron, ASTM A47, or cast steel, ASTM A27. Provide bolts, washers, and shims as required, hot-dip galvanized per ASTM A153.

H. Welding Rods: Select in accordance with AWS Specifications for the metal alloy to be welded.

2.02 NONFERROUS METALS

A. Aluminum Plate and Sheet: ASTM B209 (ASTM B209M), Alloy 6061-T6.

B. Aluminum Extrusions: ASTM B221 (ASTM B221M), Alloy 6063-T6.

C. Aluminum Castings: ASTM B26/B26M, Alloy 443.0-F.

2.03 FASTENERS

A. General: Provide zinc-coated fasteners for exterior use or where built into exterior walls. Select fasteners for the type, grade, and class required for each application and complying with applicable standards.

1. Bolts and Nuts: Regular hexagon head bolts, ASTM A307, Grade A with hex nuts ASTM A563; and, where indicated, flat washers.

2. Anchor Bolts: ASTM F1554, Grade 30

3. Lag Bolts: Square head type, ASME B18.2.1

4. Machine Screws: Cadmium plated steel, ASME B18.6.3

5. Wood Screws: Flat head carbon steel, ASME B18.6.1

6. Plain Washers: Round, carbon steel, ASME B18.22.1

7. Lock Washers: Helical, spring type, carbon steel, ASME B18.21.1

8. Drilled-in Expansion Anchors: Expansion Anchors Complying with FS FF S 325, Group VIII (anchors, expansion), Type I (internally threaded tubular expansion anchor); and machine bolts complying with FS FF BS75, Grade 5.

9. Expansion Anchors: Anchor bolt and sleeve assembly of material indicated below with capability to sustain, without failure, a load equal to six times the load imposed when installed in unit masonry and equal to four times the load imposed when installed in concrete, as determined by testing per ASTM E488, conducted by a qualified independent testing agency.

a. Interior Use - Material: Carbon-steel components zinc-plated to comply with ASTM B633, Class Fe/Zn 5.

b. Exterior Use - Material: Alloy Group 1 or 2 stainless-steel bolts complying with ASTM F593 and nuts complying with ASTM F594.

10. Toggle Bolts: FS FF-B-588, tumble-wing type, class and style as needed.

2.04 GROUT AND ANCHORING CEMENT

A. Nonshrink Nonmetallic Grout: Premixed, factory-packaged, nonstaining, noncorrosive, nongaseous grout complying with ASTM C1107. Provide grout specifically recommended by manufacturer for interior and exterior heavy-duty loading applications of type specified in this Section.

B. Approved Manufacturers:

1. "Euco N-S Grout", Euclid Chemical Co, An RPM Company (800-321-7628)
2. " Masterflow 713 Plus ", Degussa Building Systems, Inc (800-243-6739)
3. " Sonogrout 10K ", Degussa Building Systems, Inc (800-243-6739)

C. Interior Anchoring Cement: Factory-prepackaged, nonshrink, nonstaining, hydraulic controlled expansion cement formulation for mixing with water at Project site to create pourable anchoring, patching, and grouting compound. Use for interior applications only.

D. Erosion-Resistant Anchoring Cement: Factory-prepackaged, nonshrink, nonstaining, hydraulic controlled expansion cement formulation for mixing with water at Project site to create pourable anchoring, patching, and grouting compound. Provide formulation that is resistant to erosion from water exposure without need for protection by a sealer or waterproof coating and is recommended for exterior and high humidity area use by manufacturer.

2.05 CONCRETE FILL AND REINFORCING MATERIALS

A. Concrete Materials and Properties: Comply with requirements of Section 03300 (03 30 00), and as shown on Drawings, with minimum 28-day compressive strength of 3,000 PSI, unless otherwise indicated.

B. Non-slip Aggregate Finish: Factory-graded, packaged material containing fused aluminum oxide grits or crushed emery as abrasive aggregate; rustproof and non-glazing; unaffected by freezing, moisture, or cleaning materials.

C. Reinforcing Bars: ASTM A615, Grade 60, unless noted otherwise.

2.06 PAINT

A. Shop Primer for Ferrous Metal: Manufacturer's or fabricator's standard, fast-curing, lead and chromate-free, universal modified alkyd primer selected for good resistance to normal atmospheric corrosion, for compatibility with finish paint systems indicated, and for capability to provide a sound foundation for field-applied topcoats despite prolonged exposure complying with performance requirements of FS TT-P-664.

1. Approved Manufacturers:

a. Carbozinc 621"; Carboline Co. (800-848-4645)

b. "Epoxy Zinc-Rich Primer CM18/CM19"; Benjamin Moore & Co. (888-236-6667)

c. Tneme-Zinc 90-97; Tnemec Co. (800-863-6321)

B. Galvanizing Repair Paint: High zinc dust content paint for regalvanizing welds in galvanized steel, with dry film containing not less than 94 percent zinc dust by weight, and complying with DOD-P-21035 or SSPC Paint 20.

C. Zinc Chromate Primer: FS TT-P-645.

D. Bituminous Paint: Cold-applied asphalt mastic complying with SSPC Paint 12 except containing no asbestos fibers.

E. All steel to be fireproofed shall not be primed.

2.07 FABRICATION - GENERAL

A. Form metal fabrications from materials of size, thickness, and shapes indicated but not less than that needed to comply with performance requirements indicated. Work to dimensions indicated or accepted on shop drawings, using proven details of fabrication and support. Use type of materials indicated or specified for various components of each metal fabrication.

B. Form exposed work true to line and level with accurate angles and surfaces and straight sharp edges. Ease exposed edges to a radius of approximately 1/32 inch, unless otherwise indicated. Form bent-metal corners to smallest radius possible without causing grain separation or otherwise impairing work. Form exposed connections with hairline joints, flush and smooth, using concealed fasteners wherever possible. Use exposed fasteners of type indicated or, if not indicated, Phillips flathead (countersunk) screws or bolts. Locate joints where least conspicuous.

C. Weld corners and seams continuously to comply with AWS recommendations and the following:

1. Use materials and methods that minimize distortion and develop strength and corrosion resistance of base metals.

2. Obtain fusion without undercut or overlap.

3. Remove welding flux immediately.

4. At exposed connections, finish exposed welds and surfaces smooth and blended so that no roughness shows after finishing and contour

D. Provide for anchorage of type indicated; coordinate with supporting structure. Fabricate and space anchoring devices to provide adequate support for intended use.

E. Shop Assembly: Preassemble items in shop to greatest extent possible to minimize field splicing and assembly. Disassemble units only as necessary for shipping and handling limitations. Use connections that maintain structural value of joined pieces. Clearly mark units for reassembly and coordinated installation. Cut, reinforce, drill and tap miscellaneous metal work as indicated to receive finish hardware, screws, and similar items.

F. Fabricate joints that will be exposed to weather in a manner to exclude water, or provide weep holes where water may accumulate.

2.08 STEEL LADDERS

A. General: Fabricate ladders for the locations shown, with dimensions, spacings, and anchorages as indicated. Comply with requirements of ANSI A14.3.

1. For elevator pit ladders, comply with ASME A17.1.

B. Interior Pit Steel Ladders:

1. General: Fabricate ladders for the locations shown, with dimensions, spacings, and anchorages as indicated. Comply with requirements of ANSI A14.3.

2. Siderails: Continuous, 3/8-by-2-1/2-inch steel flat bars, with eased edges.

3. Rungs: 1"-inch- diameter steel bars.

4. Fit rungs in centerline of siderails; plug-weld and grind smooth on outer rail faces.

5. Provide nonslip surfaces on top of each rung, either by coating rung with aluminum-oxide granules set in epoxy-resin adhesive or by using a type of manufactured rung filled with aluminum-oxide grout.

6. Support each ladder at top and bottom and at intermediate points space not more than 6' o.c. with welded or bolted steel brackets.

7. Prime interior ladders, where indicated, including brackets and fasteners, with zinc-rich primer.

2.09 LOOSE BEARING AND LEVELING PLATES

A. Provide loose bearing and leveling plates for steel items bearing on masonry or concrete construction, made flat, free from warps or twists, and of required thickness and bearing area. Drill plates to receive anchor bolts and for grouting as required. Galvanize after fabrication.

2.10 LOOSE STEEL LINTELS

A. Fabricate loose structural steel lintels from steel angles and shapes of size indicated for openings and recesses in masonry walls and partitions at locations indicated. Weld adjoining members together to form a single unit where indicated.

B. Hot-dipped galvanize loose steel lintels located in exterior walls.

C. Size loose lintels for equal bearing of one inch per foot of clear span but not less than 8 inches bearing at each side of openings, if not indicated on Drawings.

2.11 MISCELLANEOUS FRAMING AND SUPPORTS

A. General: Provide steel framing and supports for applications indicated or which are not a part of structural steel framework, as required to complete work.

B. Fabricate units to sizes, shapes, and profiles indicated and required to receive adjacent other construction retained by framing and supports. Fabricate from structural steel shapes, plates, and steel bars of welded construction using mitered joints for field connection. Cut, drill, and tap units to receive hardware, hangers, and similar items.

1. Equip units with integrally welded anchors for casting into concrete or building into masonry. Furnish inserts if units must be installed after concrete is placed. Spacing of anchors shall not be more than 24" o.c.

2.12 MISCELLANEOUS STEEL TRIM

A. Provide shapes and sizes indicated for profiles shown. Unless otherwise indicated, fabricate units from structural steel shapes, plates, and steel bars, with continuously welded joints and smooth exposed edges. Use concealed field splices wherever possible. Provide cutouts, fittings, and anchorages as required for coordination of assembly and installation with other work.

1. Galvanize miscellaneous framing and supports in exterior locations and where shown to be painted.

2.13 FINISHES, GENERAL

A. Comply with NAAMM "Metal Finishes Manual" for "Architectural and Metal Products" for recommendations relative to application and designations of finishes. Finish metal fabrications after assembly.

2.14 STEEL AND IRON FINISHES

A. Galvanizing: For those items indicated for galvanizing, apply zinc-coating by the hot-dip process in compliance with the following requirements:

1. ASTM A153 for galvanizing iron and steel hardware.

2. ASTM A123 for galvanizing both fabricated and unfabricated iron and steel products made of uncoated rolled, pressed, and forged shapes, plates, bars, and strip 0.0299 inch thick and heavier.

B. Paint Systems: Review painting specifications for finish paint systems. Coordinate surface preparations of steel and type of primer used with specifications and the manufacturer's recommendations to insure compatibility.

C. Preparation for Shop Priming: Prepare uncoated ferrous metal surfaces to comply with minimum requirements indicated below for SSPC surface preparation specifications and environmental exposure conditions of installed metal fabrications: Interiors (SSPC Zone 1A): SSPC SP 3 "Power Tool Cleaning".

D. Apply shop primer to uncoated surfaces of metal fabrications, except those with galvanized finish or to be embedded in concrete, sprayed-on fireproofing, or masonry, unless otherwise indicated. Comply with requirements of SSPC -PA1 "Paint Application Specification No. 1" for shop painting, and at rate recommended by SSPC to provide a minimum dry film thickness of 1.5 mils. Stripe paint all edges, corners, crevices, bolts, welds, and sharp edges.

PART 3 EXECUTION

3.01 PREPARATION

A. Coordinate and furnish anchorages, setting drawings, diagrams, templates, instructions, and directions for installation of anchorages, including concrete inserts, sleeves, anchor bolts, and miscellaneous items having integral anchors that are to be embedded in concrete or masonry construction. Coordinate delivery of such items to project site.

B. Set sleeves in concrete with tops flush with finish surface elevations; protect sleeves from water and concrete entry.

3.02 INSTALLATION

A. Fastening to In-Place Construction: Provide anchorage devices and fasteners where necessary for securing miscellaneous metal fabrications to in-place construction; include threaded fasteners for concrete and masonry inserts, toggle bolts, through-bolts, lag bolts, wood screws, and other connectors as required.

B. Cutting, Fitting, and Placement: Perform cutting, drilling, and fitting required for installation of miscellaneous metal fabrications. Set metal fabrication accurately in location, alignment, and elevation; with edges and surfaces level, plumb, true, and free of rack; and measured from established lines and levels.

C. Provide temporary bracing or anchors in formwork for items that are to be built into concrete masonry or similar construction.

D. Field Welding: Comply with AWS Code for procedures of manual shielded metal-arc welding, appearance and quality of welds made, methods used in correctly welding work, and the following:

1. Use materials and methods that minimize distortion and develop strength and corrosion resistance of base metals.
2. Obtain fusion without undercut or overlap.
3. Remove welding flux immediately.
4. At exposed connections, finish exposed welds and surfaces smooth and blended so that no roughness shows after finishing and contour of welded surface matches those adjacent.

3.03 SETTING BEARING AND LEVELING PLATES

A. Clean concrete and masonry bearing surfaces of any bond-reducing materials, and roughen to improve bond to surfaces. Clean bottom surface of plates.

B. Set leveling and bearing plates on wedges, shims, or leveling nuts. After the bearing members have been positioned and plumbed, tighten the anchor bolts. Do not remove wedges or shims, but if protruding, cut off flush with the edge of the bearing plate before packing with grout.

1. Use nonmetallic nonshrink grout, unless otherwise indicated.

2. Pack grout solidly between bearing surfaces and plates to ensure that no voids remain.

3.04 TOUCH-UP PAINTING:

A. Immediately after erection, clean field welds, bolted connections, and abraded areas of shop paint, and paint exposed areas with same material as used for shop painting to comply with SSPC PA 1 requirements for touch-up of field painted surfaces.

B. Apply by brush or spray to provide a minimum dry film thickness of 2.0 mils.

C. For galvanized surfaces clean welds, bolted connections and abraded areas and apply galvanizing repair paint to comply with ASTM A780.

END OF SECTION 05 50 00

SECTION 05 52 00
METAL RAILINGS

PART 1 GENERAL

1.01 SUMMARY

A. Section Includes:

1. Interior Railings

B. Related Sections:

1. Section 03 30 00 - Cast-In-Place Concrete
2. Section 05 50 00 - Metal Fabrications for Metal stairs
3. Section 09 90 00 - Painting

1.02 DEFINITIONS

A. Definitions in ASTM E985 for railing-related terms apply to this Section.

1.03 PERFORMANCE REQUIREMENTS

A. General: In engineering handrail and railing systems to withstand structural loads indicated, determine allowable design working stresses of railing materials based on the following:

1. For Cold-Formed Structural Steel: AISI SG02 "North American Specification for Design of Cold-Formed Steel Structural Members".

B. Structural Performance of Handrails and Railing Systems: Engineer, fabricate, and install handrails and railing systems to withstand the following structural loads without exceeding the allowable design working stress of the materials for handrails, railing systems, anchors, and connections. Apply each load to produce the maximum stress in each of the respective components comprising handrails and railing systems.

1. Top Rail of Guardrail Systems: Capable of withstanding the following loads applied as indicated:

a. Designed to resist a load of 50 pounds per linear foot (pound per foot) applied in any direction at the top and to transfer this load through the supports to the structure.

b. Concentrated Load: Handrail assemblies and guards shall be able to resist a single concentrated load of 200 pounds applied in any direction at any point along the top, and have attachment devices and supporting structure to transfer this loading to appropriate structural elements of the building. This load need not be assumed to act concurrently with the loads specified in the paragraph above.

2. Intermediate Rails (all those except the handrail), balusters and panel fillers: Capable of withstanding the following loads applied as indicated.

a. Designed to withstand a horizontally applied normal load of 50 pounds on an area not to exceed 1 square foot including openings and space between rails.

C. Control of Corrosion: Prevent galvanic action and other forms of corrosion by insulating metals and other materials from direct contact with incompatible materials.

1.04 SUBMITTALS

A. General: Submit the following in accordance with Conditions of Contract and Division 01 Specification Sections:

1. Provide “Letter of Conformance” in accordance with Section 01 33 00 with the following supporting data:

a. Product data for each type of product specified.

b. Product test reports from and based on tests performed by qualified independent testing laboratory evidencing compliance of railing components and systems with requirements based on comprehensive testing of current products.

2. Shop Drawings showing fabrication and installation of handrails and railings including plans, elevations, sections, details of components, and attachments to other units of Work.

a. Where installed products are indicated to comply with certain design loadings, include structural computations, materials properties, and other information needed for structural analysis that has been signed and sealed by a qualified professional engineer responsible for their preparation.

3. Certify that each welder has satisfactorily passed AWS qualification tests for welding processes involved and, if pertinent, has undergone recertification.

a. Quality welding processes and welding operators in accordance with the following:

1) AWS D1.1 "Structural Welding Code - Steel"

2) AWS D1.3 "Structural Welding Code - Sheet Steel"

1.05 QUALITY ASSURANCE

A. Single-Source Responsibility: Obtain handrails and railing systems of each type and material from a single manufacturer.

B. Engineering Responsibility: Engineer handrails and railing systems by qualified professional engineer legally authorized to practice in jurisdiction where Project is located.

1.06 DELIVERY, STORAGE, AND HANDLING

A. Store handrails and railing systems in clean, dry location, away from uncured concrete and masonry, protected against damage of any kind. Cover with waterproof paper, tarpaulin, or polyethylene sheeting; allow for air circulation inside the covering.

1.07 PROJECT CONDITIONS

A. Field Measurements: Where handrails and railings are indicated to fit to other construction, check actual dimensions of other construction by accurate field measurements before fabrication; show recorded measurements on final shop drawings. Coordinate fabrication schedule with construction progress to avoid delay of Work.

1. Where field measurements cannot be made without delaying the Work, guarantee dimensions and proceed with fabrication of products without field measurements. Coordinate other construction to ensure that actual dimensions correspond to guaranteed dimensions.

1.08 SEQUENCING

A. Sequence and coordinate installation of handrails and railings as follows:

1. Mount handrails only on completed walls. Do not support handrails temporarily by any means not satisfying structural performance requirements.

2. Mount handrails only on gypsum board assemblies reinforced to receive anchors and where the location of concealed anchor plates has been clearly marked for benefit of installer. Do not support temporarily by any means that does not satisfy structural performance requirements.

PART 2 PRODUCTS

2.01 METALS

A. General: Provide metal forms and types that comply with requirements of referenced standards and that are free from surface blemishes where exposed to view in the finished unit. Exposed-to-view surfaces exhibiting pitting, seam marks, roller marks, stains, discolorations, or other imperfections on finished units are not acceptable.

B. Steel Pipe: ASTM A53; finish, type, and weight class as follows:

1. Black finish, unless otherwise indicated.
2. Galvanized finish where indicated.
3. Type S, Grade A, standard weight (Schedule 40), unless otherwise indicated, or another weight required by structural loads.

C. Steel Plates, Shapes, and Bars: ASTM A36

D. Gray Iron Castings: ASTM A48, Class 30

E. Malleable Iron Castings: ASTM A47, Grade 32510

1. Bracket:
   a. Approved Manufacturers:
      1) "Model 382"; Julius Blum & Co., Inc. (800-526-6293)
      2) Approved Substitution

F. Fittings: Steel Elbows, Tee-Shapes, Wall Brackets, Escutcheons

G. Mounting: Brackets and Flanges: Steel inserts for casting or setting in new and existing concrete and with steel brackets for embedding into masonry.

H. Cast-In-Place and Post-Installed Anchors in Concrete: Anchors of type indicated below, fabricated from corrosion-resistant materials with capability to sustain, without failure, load imposed within a safety factor of 4, as determined by testing per ASTM E488, conducted by a qualified independent testing laboratory.

1. Sleeves: For steel posts set in concrete, fabricate sleeves from steel pipe not less than 6 inches long with an inside diameter not less than 1/2 inch greater than the outside diameter of post, with steel plate closure welded to bottom of sleeve.

2.02 GROUT AND ANCHORING CEMENT

A. Nonshrink, Nonmetallic Grout: Premixed, factory-packaged, nonstaining, noncorrosive, nongaseous grout complying with ASTM C1107. Provide grout specifically recommended by manufacturer for interior applications of type specified in this Section.

B. Approved Manufacturers:

1. "Euco N-S Grout", Euclid Chemical Co, An RPM Company; (800-321-7628)
2. "Masterflow 713", Degussa Building Systems, Inc (800-243-6739)
3. "Sonogrout 10K", Degussa Building Systems, Inc (800-243-6739)

C. Interior Anchoring Cement: Factory-prepackaged, nonshrink, nonstaining, hydraulic controlled expansion cement formulation for mixing with water at Project site to create pourable anchoring, patching, and grouting compound. Use for interior applications only.

2.03 PAINT

A. Shop Primer for Ferrous Metal: Manufacturers or Fabricators standard, fast-curing, lead and chromate-free, primer with performance requirements in FS TT-P-664; selected for resistance to normal atmosperic corrosion, for compatibility with substrate and field-applied finish paint system indicated, and for capability to provide a sound foundation for field-applied topcoats despite prolonged exposure.

1. Approved Manufacturers:

a. "Tneme-Zinc 90-97"; Tnemec Co. An RPM Company (800-863-6321)

b. "Carbozinc 621"; Carboline Co. (800-848-4645)

c. "Epoxy Zinc-Rich Primer CM18/CM19"; Benjamin Moore & Co. (888-236-6667)

B. Galvanizing Repair Paint: High-zinc-dust-content paint for regalvanizing welds in galvanized steel, with dry film containing not less than 94 percent zinc dust by weight, and complying with DOD-P-21035 or SSPC-Paint-20.

C. Bituminous Paint: Cold-applied asphalt mastic complying with SSPC-Paint 12 except containing no asbestos fibers and complying with ASTM D1187.

2.04 WELDING MATERIALS, FASTENERS, AND ANCHORS

A. Welding Electrodes and Filler Metal: Provide type and alloy of filler metal and electrodes as recommended by producer of metal to be welded and as required for color match, strength, and compatibility in fabricated items.

B. Fasteners for Anchoring Railings to Other Construction: Select fasteners of the type, grade, and class required to produce connections that are suitable for anchoring railing to other types of construction indicated and capable of withstanding design loadings.

1. For steel railings and fittings use plated fasteners complying with ASTM B633, Class Fe/Zen 25 for electro-deposited zinc coating.

2. Sleeves: For steel posts set in concrete, fabricate sleeves from steel pipe not less than 6 inches long with an inside diameter not less than 1/2 inch greater than the outside diameter of post, with steel plate closure welded to bottom of sleeve.

C. Fasteners for Interconnecting Railing Components: Use fasteners of same basic metal as the fastened metal, unless otherwise indicated. Do not use metals that are corrosive or incompatible with materials jointed.

1. Provide concealed fasteners for interconnection of handrail and railing components and for their attachment to other work except where exposed fasteners are unavoidable or are the standard fastening method for handrail and railing system indicated.

2. Provide Phillips flat-head machine screws for exposed fasteners, unless otherwise indicated.

2.05 FABRICATION

A. General: Fabricate handrails and railing systems to comply with requirements indicated for design, dimensions, details, finish, and member sizes, including wall thickness of hollow members, post spacings, and anchorage, but not less than those required to support structural loads.

B. Preassemble railing systems in the shop to greatest extent possible to minimize field splicing and assembly. Disassemble units only as necessary for shipping and handling limitations. Clearly mark units for reassembly and coordinated installation. Use connections that maintain structural value of jointed pieces. Clearly mark units for reassembly and coordinated installation.

C. Form changes in direction of railing members as shown on Drawings.

D. Form simple and compound curves by bending pipe in jigs to produce uniform curvature for each repetitive configuration required; maintain cylindrical cross-section of pipe throughout entire bend without buckling, twisting, cracking, or otherwise deforming exposed surfaces of pipe.

E. Welded Connections: Fabricate railing systems and handrails for connection of members by welding. For connections made during fabrication, weld corners and seams continuously to comply with the following:

1. Use materials and methods that minimize distortion and develop strength and corrosion resistance of base metals.
2. Obtain fusion without undercut or overlap.
3. Remove welding flux immediately.
4. At tee and cross intersections, notch ends of intersecting members to fit contour of pipe to which end is joined and weld all around.
5. At exposed connections, finish exposed welds and surfaces smooth and blended so that no roughness shows after finishing and contour of welded surface matches those adjacent.

F. Nonwelded Connections: Fabricate railing systems and handrails for connection of members by means of railing manufacturer's standard concealed mechanical fasteners and fittings to produce flush, smooth, rigid, hairline joints.

1. Fabricate splice joints for field connection using epoxy structural adhesive where this represents manufacturer's standard splicing method.

G. Brackets, Flanges, Fittings and Anchors: Provide manufacturer's standard wall brackets, flanges, miscellaneous fittings and anchors for interconnection of handrail and railing members to other work, unless otherwise indicated.

H. Provide inserts and other anchorage devices for connecting handrails and railing systems to concrete or masonry work. Fabricate anchorage devices which are capable of withstanding loadings imposed by handrails and railing systems. Coordinate anchorage devices with supporting structure.

I. Shear and punch metals cleanly and accurately. Remove burrs from exposed cut edges.

J. Ease exposed edges to a radius of approximately 1/32 inch, unless otherwise indicated. Form bent-metal corners to smallest radius possible without causing grain separation or otherwise impairing work.

K. Cut, reinforce, drill, and tap miscellaneous metal work as indicated to receive finish hardware, screws, and similar items.

L. Fabricate joints that will be exposed to weather in a manner to exclude water.

M. Provide wall returns at ends of wall-mounted handrails, unless otherwise indicated.

N. Fillers: Provide steel sheet or plate fillers of thickness and size n indicated or required to support structural loads of handrails where needed to transfer wall bracket loads through wall finishes to structural supports. Size fillers to suit wall finish thicknesses to produce adequate bearing to prevent bracket rotation and overstressing of substrate.

2.06 STEEL FINISHES

A. Comply with NAAMM "Metal Finishes Manual" for recommendations relative to application and designations of finishes.

B. Protect mechanical finishes on exposed surfaces from damage by application of strippable, temporary protective covering prior to shipment.

C. Appearance of Finished Work: Variations in appearance of abutting or adjacent pieces are acceptable if they are within 1/2 of the range of approved samples. Noticeable variations in the same piece are not acceptable. Variation in appearance of other components is acceptable if they are within range of approved samples and they are assembled or installed to minimize contract.

D. Interior:

1. Preparation for Shop Priming: Prepare uncoated ferrous metal surfaces to comply with minimum requirements indicated below for SSPC surface preparation specifications and environmental exposure conditions of installed metal fabrications.

   a. Interiors (SSPC Zone 1A): SSPC-SP7 "Brush-Off Blast Cleaning".

2. Apply shop primer to uncoated surfaces of handrails and railing components, except those with galvanized finish or to be embedded in concrete or masonry, unless otherwise indicated. Comply with requirements of SSPC-PA1 "Paint Application Specification No. 1" for shop painting.

   a. Approved Manufacturers:

      1) "Tneme-Zinc 90-97"; Tnemec Co. An RPM Company (800-863-6321)

      2) "Carbozinc 621"; Carboline Co. (800-848-4645)

      3) "Epoxy Zinc-Rich Primer CM18/CM19"; Benjamin Moore & Co. (888-236-6667)

3. Stripe paint all edges, corners, crevices, bolts, welds, and sharp edges.

PART 3 EXECUTION

3.01 PREPARATION

A. Coordinate setting drawings, diagrams, templates, instructions, and directions for installation of anchorages, such as sleeves, concrete inserts, anchor bolts, and miscellaneous items having integral anchors that are to be embedded in concrete as masonry construction. Coordinate delivery of such items to project site.

3.02 INSTALLATION

A. Fit exposed connections accurately together to form tight, hairline joints.

B. Perform cutting, drilling, and fitting required for installation of handrails and railings. Set handrails and railings accurately in location, alignment, and elevation, measured from established lines and levels and free from rack.

1. Do not weld, cut, or abrade surfaces of handrails and railing components that have been coated or finished after fabrication and are intended for field connection by mechanical or other means without further cutting or fitting.

2. Set posts plumb within a tolerance of 1/4 inch in 12 feet.

3. Align rails so that variations from level for horizontal members and from parallel with rake of steps and ramps for sloping members do not exceed 1/4 inch in 12 feet.

C. Field Welding: Comply with the following requirements:

1. Use materials and methods that minimize distortion and develop strength and corrosion resistance of base metals.

2. Obtain fusion without undercut or overlap.

3. Remove welding flux immediately.

4. At exposed connections, finish exposed welds and surfaces smooth and blended so that no roughness shows after finishing and contour of welded surface matches those adjacent.

D. Corrosion Protection: Coat concealed surfaces of aluminum that will come into contact with grout, concrete, masonry, wood, or dissimilar metals with a heavy coat of bituminous paint or zinc chromate primer.

E. Fastening to In-Place Construction: Provide anchorage devices and fasteners where necessary for securing handrails and railings to in-place construction.

3.03 ANCHORING POSTS

A. Adjust handrails and railing systems prior to anchoring to ensure matching alignment at abutting joints. Space posts at interval indicated but not less than that required by design loadings.

B. Anchor posts in concrete by means of pipe sleeves preset and anchored into concrete where shown on Drawings. After posts have been inserted into sleeves, fill annular space between post and sleeve solid with the following anchoring material, mixed and placed to comply with anchoring material manufacturer's directions.

C. Anchor posts in concrete by core drilling holes, where shown on drawings, not less than 5 inches deep and 3/4 inch greater than outside diameter of post. Clean holes of all loose material, insert posts, and fill annular space between post and concrete with the following anchoring material, mixed and placed to comply with anchoring material manufacturer's directions.

1. Nonshrink, nonmetallic grout or anchoring cement.

3.04 RAILING CONNECTIONS

A. Nonwelded Connections: Use manufacturer's standard mechanical for permanently connecting railing components. Use wood blocks and padding to prevent damage to railing members and fittings. Seal recessed holes of exposed locking screws with plastic filler cement colored to match finish of handrails and railing systems.

B. Welded Connections: Use fully welded joints for permanently connecting railing components by welding. Cope or butt components to provide 100 percent contact or use manufacturer's standard fittings designed for this purpose.

3.05 ANCHORING RAIL ENDS

A. Anchor rail ends into concrete and masonry with round flanges connected to rail ends and anchored into wall construction with post-installed anchors and bolts.

B. Anchor rail end to metal surfaces with oval or round flanges.

3.06 ATTACHMENT OF HANDRAILS TO WALLS

A. Attach handrails to wall with wall brackets and end fittings. Provide bracket with not less than 1-1/2 inch clearance from inside face of handrail and finished wall surface.

B. Locate brackets as indicated or, if not indicated, at spacing required to support structural loads.

C. Secure wall brackets and wall return fittings to building construction as follows:

1. Use type of bracket with predrilled hole for exposed bolt anchorage.

2. For concrete and solid masonry anchorage, use drilled-in expansion shield and either concealed hanger bolt or exposed lag bolt, as applicable.

3. For hollow masonry anchorage, use toggle bolts with square heads.

4. For steel-framed gypsum board assemblies, fasten brackets directly to steel framing or concealed anchors using self-tapping screws of size and type required to support structural loads.

3.07 ADJUSTING AND CLEANING

A. Touch-Up Painting: Immediately after erection, clean field welds, bolted connections, and abraded areas of shop paint, and paint exposed areas with same material.

B. For Galvanized Surfaces: Clean field welds, bolted connections, and abraded areas and apply galvanizing repair pint to comply with ASTM A780.

3.08 PROTECTION

A. Protect finishes of railing systems and handrails from damage during construction period by use of temporary protective coverings approved by railing manufacturer. Remove protective covering at time of Substantial Completion.

B. Restore finishes damaged during installation and construction period so that no evidence remains of correction work. Return items that cannot be refinished in the field to the shop. Make required alterations and refinish entire unit or provide new units.

END OF SECTION 05 52 00

SECTION 07 10 00
DAMPPROOFING AND WATERPROOFING

PART 1 GENERAL

1.01 SUMMARY:

A. Section includes:

1. Under-Slab Vapor Barrier

B. Related Sections

1. Section 03 30 00 - Cast-in-Place Concrete
2. Section 04 20 00 – Unit Masonry
3. Section 07 20 00 - Thermal Protection for under-slab-on-grade insulation
4. Section 07 62 00 - Sheet Metal Flashing and Trim

1.02 SYSTEM DESCRIPTION

A. General: Provide waterproofing that prevents the passage of liquid water under hydrostatic pressure and complies with requirements as demonstrated by testing performed by an independent testing agency of manufacturer's current waterproofing membrane.

1.03 SUBMITTALS

A. General: Submit the following in accordance with Conditions of Contract and Division 01 Specification Sections:

1. Submit product data on each type of dampproofing and waterproofing product specified, including manufacturer's details, installation instructions, use limitations and recommendations data substantiating that materials comply with specified requirements.

a. Mark each copy to identify applicable products, characteristics, models, options and other supplemental data to clearly communicate information specific to this Project.

b. Prepare and submit Project-specific details as required by the Drawings.

1.04 QUALITY ASSURANCE

A. Installer Qualifications: Engage an experienced Installer who has completed fluid-applied, pre-applied and sheet membrane waterproofing applications similar in material, design, and extent to that indicated for Project and that has resulted in construction with a record of successful in-service performance.

1. Assign work closely associated with waterproofing, including (but not limited to) waterproofing accessories, and flashings used in conjunction with waterproofing, expansion joints in membrane, insulation, and protection course on membrane, to Installer of fluid-applied waterproofing, for single, undivided responsibility.

B. Single-Source Responsibility: Obtain primary waterproofing materials of each type required from a single manufacturer.

C. Pre-Installation Conference: A pre-installation conference shall be held prior to commencement of field operations to establish procedures to maintain optimum working conditions and to coordinate this work with related and adjacent work. Agenda for meeting shall include review of special details and flashing.

D. Schedule Coordination: Schedule work such that membrane will not be left exposed to weather for longer than that recommended by the manufacturer.

1.05 DELIVERY, STORAGE, AND HANDLING

A. Deliver materials to Project site in original packages with seals unbroken, labeled with manufacturer" name, product, date of manufacturer, and directions for storage.

B. Store materials in their original undamaged packages in a clean, dry, protected location and within temperature range required by waterproofing manufacturer. Protect stored materials from direct sunlight.

C. Protect waterproofing materials from freezing. In cool temperatures, store the material for several hours at room temperature to facilitate mixing and application.

1.06 PROJECT CONDITIONS

A. Environmental Conditions: Apply waterproofing within range of ambient and substrate temperatures recommended by waterproofing manufacturer. Do not apply waterproofing to a damp or wet substrate.

1. Do not apply waterproofing in snow, rain, fog, or mist.

2. Ensure substrate is free from dirt and loose materials and debris and primed per manufacturer's specification.

B. Maintain adequate ventilation during penetration and application of waterproofing materials.

C. Provide protection of surrounding areas and adjacent surfaces from application of materials.

PART 2 PRODUCTS

2.01 MATERIALS, GENERAL

A. General Compatibility: Provide products that are recommended by manufacturer to be fully compatible with indicated substrates.

2.02 UNDER-SLAB-ON-GRADE VAPOR BARRIER:

A. Vapor Barrier Under-Slabs-On-Grade:

1. Plastic Vapor : ASTM E1745, Class A, with maximum performance rating of 0.018 perm. Provide in lengths and widths required for least number of seams.

2. Under Slab: 15 mils thick.

3. Vapor- Barrier Tape: Pressure-sensitive tape of type recommended by vapor barrier manufacturer for sealing joints and penetrations in vapor barrier.

4. Manufacturers:

a. "Stego Wrap (15 mil) Vapor Barrier"; Stego Industries, LLC (877-464-7834)

b. "Perminator (15 mil) Underslab Vapor Retarder"; W.R. Meadows, Inc. (800-342-5976)

c. "Griffoyln (15 mil) Griffiolyn a Division of Reef Industries) (800-231-6074)

d. "Moistop Ultra (15 mil)"; Fortifiber Corporation (800-773-4777)

e. "Viper VaporCheck (16 mil)"; Insulation Solutions, Inc. (866-698-6562)

2.03 MISCELLANEOUS MATERIALS

A. In addition to primary waterproofing materials, provide the following:

1. Primer/Filler/Sealer: As recommended by waterproofing manufacturer.

2. Flashings, Cant Strips, and Accessories: As recommended by waterproofing manufacturer.

PART 3 EXECUTION

3.01 EXAMINATION

A. Examine substrates, areas, and conditions under which waterproofing systems will be applied, with Installer present, for compliance with requirements. Do not proceed with installation until unsatisfactory conditions have been corrected.

1. Do not proceed with installation until after minimum concrete curing period recommended by waterproofing manufacturer.

2. Verify substrate is visibly dry and free of moisture. Test for capillary moisture by plastic sheet method according to ASTM D 4263.

B. Inspect concrete and concrete masonry surfaces for:

1. Contamination — algae, chalkiness, dirt, dust, efflorescence, form oil, fungus, grease, mildew or other foreign substances.

2. Surface absorption and chalkiness.

3. Cracks — measure crack width and record location of cracks.

4. Damage and deterioration.

5. Moisture content and moisture damage — use a moisture meter to determine if the surface is dry enough to receive the air and moisture barrier and record any areas of moisture damage or excess moisture.

6. Compliance with specification tolerances — record areas that are out of tolerance (greater than 1/4 inch in 8-0 feet deviation in plane).

C. Notify Architect in writing of anticipated problems using waterproofing over substrate. Do not start work until deviations are corrected.

3.02 PREPARATION

A. Clean substrate of projections and substances detrimental to work; comply with instructions of prime materials manufacturer.

B. Install cant strips and similar accessories as shown and as recommended by prime materials manufacturer even though not shown.

C. Fill voids, seal joints, and apply bond breakers as recommended by dampproofing and waterproofing materials manufacturer.

D. Repair cracks, spalls, or other damage in concrete or concrete masonry surfaces

E. Prime substrate as recommended by prime materials manufacturer.

3.03 INSTALLATION

A. Installation of Under-Slab Vapor Barrier

1. General: Extend vapor and moisture barriers to extremities of areas to be protected from vapor transmission. Extend vapor and moisture barriers to cover miscellaneous voids in insulated substrates, including those which have been stuffed with loose fiber-type insulation.

2. Seal joints caused by pipes, conduits, electrical boxes, and similar items penetrating vapor barrier with vapor-barrier tape of type recommended by vapor barrier manufacturer to create an air-tight seal between penetrating objects and vapor barrier.

3. Repair any tears or punctures in vapor and moisture barriers immediately before concealment by other work. Cover with vapor-barrier tape or another layer of vapor barrier.

4. Refer to 07 20 00 - Thermal Protection for installation of Under-slab-on-grade insulation.

3.01 FIELD QUALITY CONTROL

A. Testing Agency: Owner will engage a qualified independent testing agency to oversee installation and to perform tests and inspections and prepare test reports.

B. Inspections: Dampproofing and Waterproofing materials and installation are subject to inspection for compliance with requirements.

3.02 PROTECTING AND CLEANING

A. Protect waterproofing from damage and wear during application and remainder of construction period, according to manufacturer's written instructions.

B. Clean spillage and soiling from adjacent construction using cleaning agents and procedures recommended by manufacturer of affected construction.

END OF SECTION 07 10 00

SECTION 07 20 00
THERMAL PROTECTION

PART 1 GENERAL

1.01 SUMMARY

A. Section Includes:

1. Foundation Wall and Under Slab Insulation

B. Related Sections:

1. Section 03 30 00 – Cast-in-Place Concrete for installation of under-slab insulation
2. Section 04 20 00 - Unit Masonry for installation of insulation used in masonry cavity walls
3. Section 07 10 00 – Dampproofing and Waterproofing

1.02 REFERENCES

A. ASTM International Publications:

1. C578 "Standard Specification for Rigid, Cellular Polystyrene Thermal Insulation"
2. C665 "Standard Specification for Mineral-Fiber Blanket Thermal Insulation for Light Frame Construction and Manufactured Housing"
3. D4397 "Standard Specification for Polyethylene Sheeting for Construction, Industrial, and Agricultural Applications"
4. E84 "Standard Test Method for Surface Burning Characteristics of Building Materials"
5. E96 "Standard Test Methods for Water Vapor Transmission of Materials"
6. E119 "Standard Test Methods for Fire Tests of Building Construction and Materials"
7. E136 "Standard Test Method for Behavior of Materials in a Vertical Tube Furnace at 750°C"
8. E1677 "Standard Specification for an Air Retarder (AR) Material or System for Low-Rise Framed Building Walls"
9. E1745 "Standard Specification for Water Vapor Retarders Used in Contact with Soil or Granular Fill under Concrete Slabs"

B. Code of Federal Regulations (CFR) Publications:

1. 40 CFR 763, "Asbestos: Appendix A - Transmission Electron Microscopy Analytical Methods"

C. Underwriter's Laboratories, Inc. (UL) Standards

1. "Fire Resistance Directory"

1.03 DEFINITIONS

A. Thermal Resistivity: Where thermal resistivity properties of insulation materials are designated by r-values, they represent the rate of heat flow through a homogeneous material exactly 1" thick, measured by test method included in referenced material standard or otherwise indicated. They are expressed by the temperature difference in degrees F between the two exposed faces required to cause one BTU to flow through one square foot per hour at mean temperatures indicated.

1.04 SUBMITTALS

A. General: Submit the following in accordance with Conditions of Contract and Division 01 Specification Sections:

1. Certified Test Reports: With product data, submit copies of certified test reports showing compliance with specified performance values, including R-values (aged values for plastic insulations), densities, compression strengths, fire performance characteristics, perm ratings, water absorption ratings and similar properties.

1.05 QUALITY ASSURANCE

A. Fire Test Response Characteristics: Provide insulation materials which are identical to those whose fire-test-response characteristics, as listed for each material or assembly of which insulation is a part, have been determined by testing, per methods indicated below, by UL or other testing and inspecting agency acceptable to authorities having jurisdiction.

1. Surface Burning Characteristics: ASTM E84

2. Fire Resistance Ratings: ASTM E119

3. Combustion Characteristics: ASTM E136

B. Asbestos Content of Inorganic Insulations: provide insulations composed of mineral fibers or mineral ores which contain no asbestos of any type of mixture of types occurring naturally as impurities as determined by polarized light microscopy test per Appendix A of 40 CFR 763.

C. All insulation in roof and wall assemblies shall be approved for use without an additional thermal barrier in accordance with Local Building Codes.

1.06 DELIVERY, STORAGE, AND HANDLING

A. Deliver insulation in original labeled bundles.

B. General Protection: Protect insulations from physical damage and from becoming wet, soiled, or covered with ice or snow. Comply with manufacturer's recommendations for handling, storage, and protection during installation.

C. Protection for Plastic Insulation:

1. Do not expose to sunlight, except to extent necessary for period of installation and concealment.

2. Protect against ignition at all times. Do not deliver plastic insulating materials to project site ahead of installation time.

3. Complete installation and concealment of plastic materials as rapidly as possible in each area of work.

1.07 PROJECT CONDITIONS

A. The Installer must examine the substrate and the conditions under which insulation work is to be performed and notify the Architect in writing of unsatisfactory conditions. Do not proceed with the work until unsatisfactory conditions have been corrected in a manner acceptable to the Installer.

B. Weather Conditions: Proceed with work only when weather conditions are in compliance with manufacturer's recommended limitations, and when conditions will permit the work to proceed in accordance with requirements and the manufacturer's recommendations.

C. Do not apply insulation to damp, frozen, dirty, dusty, or surfaces unacceptable to manufacturer.

D. Coordinate this work with all trades and protect it after installation.

PART 2 PRODUCTS

2.01 MANUFACTURERS

A. Extruded Polystyrene Foam Board Insulation - Foundation Walls and Under Slab.

1. Approved Manufacturers:
   a. "Styrofoam Square Edge"; Dow Chemical Company (800-441-4369)
   b. "Foamular 250"; Owens-Corning (800-438-7465)

B. Polyisocyanurate Board Insulation - Masonry Cavity Walls
   1. Approved Manufacturers:
      a. "THERMAX (ci) Exterior Insulation"; Dow Chemical Company (800-441-4369)
      b. "Vertical H-Shield Foil Cavity Walls"; Hunter Panels (888-746-1114)
      c. "Thermasheath-3 R=13, 2" Rigid Polyisocyanurate Board Insulation"; Rmax, Inc. (800-845-4455)

2.02 INSULATING MATERIALS

A. General: Provide insulating materials which comply with requirements indicated for materials, compliance with referenced standards, and other characteristics.

B. Extruded Polystyrene Board Insulation: Rigid, cellular polystyrene thermal insulation with closed-cells and integral high density skin, formed by the expansion of polystyrene base resin in an extrusion process to comply with ASTM C578 for Type indicated; with 5-year aged r-values of 5.4 and 5 at 40 and 75 deg. F., respectively; and as follows:
   1. Type IV, 1.6 lb./cu. ft. min. density, unless otherwise indicated.

C. POLYISOCYANURATE BOARD INSULATION - MASONRY CAVITY
   1. Aluminum-foil-faced, glass-fiber-reinforced, rigid, cellular, polyisocyanurate thermal insulation complying with ASTM C1289, Type I, Class 2. UL Class A.
   2. Surface Burning Characteristics in accordance with ASTM E84:
      a. Flame Spread: 25
      b. Smoke Developed: <450
   3. Material shall comply with International Building Code (IBC) Section 2603 for use in exterior walls without an additional thermal barrier.
   4. Panel Width: 16-inches wide

D. Accessories:
   1. Nails and Staples: Steel wire, galvanized, type and size to suit application.
   2. Tape: Polyethylene or Polyester, self-adhering type, 2 inches wide.
   3. Insulation Fasteners: Steel impale spindle and clip on flat metal base, self adhering backing, length to suit insulation thickness, capable of securely and rigidly fastening insulation in place.

PART 3 EXECUTION

3.01 EXAMINATION

A. Require Installer to examine substrates and conditions under which insulation work is to be performed. A satisfactory substrate is one that complies with requirements of the section in which substrate and related work is specified. Obtain Installer's written report listing conditions detrimental to performance of work in this section. Do not proceed with installation of insulation until unsatisfactory conditions have been corrected.
   1. Verify adjacent materials are dry and ready to receive insulation.

2. Verify mechanical and electrical services within insulated spaces have been installed and tested.

3. Verify substrate surface is flat, free of honeycomb, fins, irregularities, and materials that will impede adhesive bond.

3.02 PREPARATION

A. Clean substrates of substances harmful to insulations or vapor retarders, including removal of projections which might puncture vapor retarders.

3.03 INSTALLATION, GENERAL

A. Comply with manufacturer's instructions for particular conditions of installation in each case. If printed instructions are not available or do not apply to project conditions, consult manufacturer's technical representative for specified recommendations before proceeding with work.

1. Verify insulation boards are unbroken and free of damage.

B. Extend insulation full thickness as shown over entire area to be insulated. Cut and fit tightly around obstructions, and fill voids with insulation. Remove projections which interfere with placement.

C. Apply a single layer of insulation of required thickness, unless otherwise shown or required to make up total thickness.

D. Trim insulation neatly to fit spaces. Use boards free of damage.

E. Fit insulation tight in spaces and tight to exterior side of mechanical and electrical services within the plane of insulation. Leave no gaps or voids.

F. Install all insulation in accordance with manufacturer's specifications.

G. Water-Piping Coordination: If water piping is located within insulated exterior walls, coordinate location of piping to ensure that it is placed on warm side of insulation and insulation encapsulates piping.

3.04 INSTALLATION OF PERIMETER AND UNDER-SLAB INSULATION

A. On vertical surfaces, set units in adhesive applied in accordance with manufacturer's instructions. Use type of adhesive recommended by manufacturer of insulation.

B. Protect top surface of horizontal insulation (from damage during concrete work) by application of protection board.

3.05 INSTALLATION OF MASONRY CAVITY-WALL INSULATION

A. Refer to Section 04 20 00 – Unit Masonry.

3.06 PROTECTION

A. General: Protect installed insulation and vapor retarders from harmful weather exposures and from possible physical abuses, where possible by non-delayed installation of concealing work or, where that is not possible, by temporary covering or enclosure.

PART 4 SCHEDULES

4.01 SCHEDULES

A. Exterior Wall Insulation: R=13, 2" Rigid Polyisocyanurate Board Insulation, 48" wide.

B. Foundation Wall and Under Slab Insulation: R=10, 2" Rigid Extruded Polystyrene Board Insulation.

END OF SECTION 07 20 00

SECTION 07 62 00
SHEET METAL FLASHING AND TRIM

PART 1 GENERAL

1.01 SUMMARY

A. Section Includes:

1. Doors, and other locations as shown on Drawings.
2. Roof Drainage Systems:
   a. Gutters
   b. Downspouts
3. Fasteners

B. Related Sections:

1. Section 04 20 00 – Unit Masonry
2. Section 07 20 00 - Thermal Protection
3. Section 07 92 00 – Joint Sealants
4. Section 08 11 13 – Hollow Metal Doors and Frames

1.02 REFERENCES

A. ASTM International Publications:

1. B32 "Standard Specification for Solder Metal"
2. B117 "Standard Practice for Operating Salt Spray (Fog) Apparatus"
3. B209 "Standard Specification for Aluminum and Aluminum-Alloy Sheet and Plate"
4. D226 "Standard Specification for Asphalt-Saturated Organic Felt Used in Roofing and Waterproofing"
5. C920 "Standard Specification for Elastomeric Joint Sealants"
6. D523 "Standard Test Method for Specular Gloss"
7. D1079 "Standard Terminology Relating to Roofing, Waterproofing, and Bituminous Materials"
8. D1970 "Standard Specification for Self-Adhering Polymer Modified Bituminous Sheet Materials Used as Steep Roofing Underlayment for Ice Dam Protection"
9. D2244 "Standard Practice for Calculation of Color Tolerances and Color Differences from Instrumentally Measured Color Coordinates"
10. D2247 "Standard Practice for Testing Water Resistance of Coatings in 100% Relative Humidity"
11. D2843 "Standard Test Method for Density of Smoke from the Burning or Decomposition of Plastics"
12. D3359 "Standard Test Methods for Measuring Adhesion by Tape Test"
13. D6221 "Standard Specification for Reinforced Bituminous Flashing Sheets for Roofing and Waterproofing"

B. American Architectural Manufacturers Association (AAMA) Publications:

1. 1402 "Standard Specifications for Aluminum Siding, Soffit and Fascia"

2. 2603 "Voluntary Specification, Performance Requirements and Test Procedures for Pigmented Organic Coatings on Aluminum Extrusions and Panels"

3. 2604 "Voluntary Specification, Performance Requirements and Test Procedures for High Performance Organic Coatings on Aluminum Extrusion and Panels"

C. FM Global (FMG) Standards

D. Sheet Metal and Air Conditioning Contractors' National Association (SMACNA) Publications:

1. "Architectural Sheet Metal Manual", Current Edition

E. The Society for Protective Coatings (SSPC) Publications:

1. "SSPC Painting Manual"

2. Paint 12, Cold-Applied Asphalt Mastic (Extra Thick Film)

F. National Association of Architectural Metal Manufacturers (NAAMM) Publications:

1. "Metal Finishes Manual"

1.03 SUBMITTALS

A. General: Submit the following in accordance with Conditions of Contract and Division 01 Specification Sections:

1. Submit Shop Drawings, color samples, product information, and samples clearly detailing shaping, jointing, length of sections, fastening, and installation details.

2. Manufacturer's standard color charts for selection purposes.

1.04 QUALITY ASSURANCE

A. Installer Qualifications: Engage an experienced installer who has completed sheet metal flashing and trim work similar in material, design, and extent to that indicated for this project and with a record of successful in-service performance.

B. Do not proceed with the installation of flashing and sheet metal work until curb and substrate construction, cant strips, blocking, reglets, and other construction to receive the work is completed.

C. Flashing and sheet metal shall be installed in accordance with:

1. FM Global (FMG) Standards (Factory Mutual Engineering and Research Requirements)

2. SMACNA's Architectural Sheet Metal Manual"

3. Conform to dimensions and profiles shown unless more stringent requirements are indicated.

D. The installer must examine the substrate and the conditions under which flashing and sheet metal work is to be performed, and notify the Architect in writing of unsatisfactory conditions. Do not proceed with the work until unsatisfactory conditions have been corrected in a manner acceptable to the installer.

1.05 PROJECT CONDITIONS

A. Existing Conditions:

1. Exercise care when working on or about roof surfaces to avoid damaging or puncturing membrane or flexible flashings.

2. Place plywood panels on roof surfaces adjacent to work of this Section and on access routes. Keep in place until completion of work.

B. Roofing and flashing shall not be applied during precipitation and shall not be started in the event there is a probability of precipitation during application. Metal faced flashing shall not be applied when ambient temperature is below 35 degrees F.

C. Do not install Membrane Flashing Systems on wet or damp surfaces. Surfaces should also be free from dirt, oils, lubricants or other debris that may inhibit adhesion of the flashing tape to the substrate. After precipitation, allow a minimum of 24 hours for drying before installing the flashing tape. For optimal performance, install at temperatures above 40 degrees F.

D. Coordinate Work of this Section with interfacing and adjoining Work for proper sequencing of each installation. Ensure best possible weather resistance, durability of Work, and protection of materials and finishes.

1.06 DELIVERY, STORAGE, AND HANDLING

A. Delivery: Deliver materials in manufacturer's original, unopened, undamaged containers with identification labels intact.

B. Storage and Protection: Protect materials from rain and physical damage. Provide cover on top and on all sides, allowing for adequate ventilation. Store flashing where temperatures will not exceed 90 degrees F for extended periods. Store all products in a dry area away from high heat, flames or sparks.

C. Store Membrane Flashing System products in manufacturer's unopened packaging until ready for installation and dispense the needed amounts of materials from the manufacturer box.

1.07 WARRANTY

A. Provide Owner with warranty stating that flashing material and metal wall fascia will properly shed water and protect roof and wall from physical damage for a minimum period of five years from date of Substantial Completion and the damage resulting from failure to provide above stated performances will be repaired to satisfaction of Owner at no additional cost.

PART 2 PRODUCTS

2.01 ALUMINUM FLASHING AND SHEET METAL

A. Materials:

1. Aluminum Sheet: ASTM B209, Alloy 3003, Temper H14, AA-C22A41, minimum .032 inch thick (20 ga) sheet.

   a. Finish: 5-year Fluoropolymer 2-Coat System: Manufacturer's standard 2-coat, thermocured system consisting of specially formulated inhibitive primer and fluouropolymer color topcoat containing not less than 70 percent polyvinylidene fluoride resin by weight; complying with AAMA 2604 where exposed.

2. Fasteners: Concealed type; of same material as flashings; sized to suit application.

3. Size and shape as shown on Drawings.

4. Color: As selected by Architect from Manufacturer's full range.

2.02 GALVANIZED FLASHING AND SHEET METAL

A. Materials:

1. Seamless, continuous, gutters to be minimum 032" thick, downspouts to be minimum .024" thick, sheet steel.

2. Metallic-Coated Steel Sheet: Restricted flatness steel sheet metallic coated by the hot-dip process and prepainted by the coil-coating process to comply with ASTM A755.

   a. Zinc-Coated (Galvanized) Steel Sheet: ASTM A653, G90 (Z275) coating designation; structural steel quality.

   b. Surface: Smooth.

   c. Exposed Coil-Coated Finish:

d. Finish: 5-year Fluoropolymer 2-Coat System: Manufacturer's standard 2-coat, thermocured system consisting of specially formulated inhibitive primer and fluouropolymer color topcoat containing not less than 70 percent polyvinylidene fluoride resin by weight; complying with AAMA 2604 where exposed.

3. Fasteners: Concealed type; of same material as flashings; sized to suit application.

4. Size and shape as shown on Drawings.

5. Color: As selected by Architect from Manufacturer's full range..

2.03 GUTTERS & DOWNSPOUTS

A. Materials:

1. Seamless, continuous, gutters to be minimum 032" thick, downspouts to be minimum .024" thick, sheet steel.

2. Metallic-Coated Steel Sheet: Restricted flatness steel sheet metallic coated by the hot-dip process and prepainted by the coil-coating process to comply with ASTM A755.

a. Zinc-Coated (Galvanized) Steel Sheet: ASTM A653, G90 (Z275) coating designation; structural steel quality.

b. Surface: Smooth.

c. Exposed Coil-Coated Finish:

1) 3-Coat Fluoropolymer: AAMA 621. 0.8 mil primer with 0. 70 percent PVDF fluoropolymer color coat and 0.8 mil 70 percent PVDF fluoropolymer clear topcoat. Prepare, pretreat, and apply coating to exposed metal surfaces to comply with coating and resin manufacturers' written instructions.

2) Color: To match "CENTRIA Architectural Systems": "Champagne Bronze"

d. Concealed Finish: Apply pretreatment and manufacturer's standard white or light-colored acrylic or polyester backer finish consisting of prime coat and wash coat with a minimum total dry film thickness of 0.5 mil.

3. Size and Shape:

a. Gutters: SMACNA Style K, or as shown on Drawings. Minimum nominal 6" top and 4-3/4" height.

b. Downspouts: Minimum 3-3/4" x 5" rectangular shape, or as indicated on Drawings.

4. Accessories:

a. Gutters:

1) End caps

2) Hangers: Concealed

3) Non-corrosive leaf screens at gutters.

b. Downspouts:

1) Elbows

2) Straps: Minimum two per downspout

3) Strainers

c. Splash Blocks:

1) Provide splash-blocks where indicated on Drawings. Units shall be concrete, minimum 3,000 psi at 28 days with 5% air entrainment. Size and profile to suit application.

2.04 MEMBRANE FLASHING

A. Wall Flashing:

1. Approved Manufacturers:

a. "Perm-A-Barrier" wall flashing and "Perm-A-Barrier" primer and stainless steel drip edge; W.R. Grace & Company (800-778-2880)

b. "Hyload SA with Stainless Steel Drip Edge"; Hyload Flashing (800-457-4056)

c. "Flex Flash SA with Stainless Steel Drip Edge"; Hohman and Bernard, Inc. (800-645-0616)

d. "DuPont Thru-Wall Flashing System with Integrated Drip Edge"; DuPont Company (800-448-9835).

B. Thru-Wall Flashing:

1. Approved Manufacturers:

a. "5 oz. Copper Flashing with Stainless Steel Drip Edge", York Manufacturing, Inc. (800-551-2828)

b. "Flex Flashing with Stainless Steel Drip Edge", Hohman and Bernard, Inc. (800-645-0616)

c. "Perm-A-Barrier" wall flashing and "Perm-A-Barrier" primer and stainless steel drip edge as manufactured by W.R. Grace & Company (800-778-2880)

d. "Hyload SA with Stainless Steel Drip Edge", Hyload Flashing (800-457-4056)

e. "DuPont Thru-Wall Flashing System with Integrated Drip Edge"; DuPont Company (800-448-9835).

1) System to include preformed inside/outside corners and end dams to match the wall design.

2. Provide fasteners, primers, sealants, and mastic as approved by manufacturer, as required.

2.05 MISCELLANEOUS MATERIALS AND ACCESSORIES

A. Bituminous Paint: Acid and alkali-resistant type; black color; FS TT-C-494 or SSPC-Paint 12 solvent type, nominally free of sulfur, compounded for 15-mil dry film thickness per coat.

B. Fasteners: Same metal as sheet metal flashing or other noncorrosive metal as recommended by sheet metal manufacturer. Match finish of exposed heads with material being fastened.

C. Elastomeric Sealant: Generic type recommended by sheet metal manufacturer and fabricator of components being sealed and complying with requirements for joint sealants as specified in Division 07 Section " Joint Sealants".

D. Epoxy Seam Sealer: Two-part, noncorrosive, aluminum seam-cementing compound, recommended by aluminum manufacturer for exterior and interior nonmoving joints, including riveted joints.

E. Adhesives: Type recommended by flashing sheet metal manufacturer for waterproof and weather-resistant seaming and adhesive application of flashing sheet metal.

F. Metal Accessories: Provide sheet metal clips, straps, anchoring devices, and similar accessory units as required for installation of work, matching or compatible with material being installed; noncorrosive; size and thickness required for performance.

2.06 FABRICATION, GENERAL

A. Sheet Metal Fabrication Standard: Fabricate sheet metal flashing and trim to comply with recommendations of SMACNA's "Architectural Sheet Metal Manual" that apply to the design, dimensions, metal, and other characteristics of the item indicated.

B. Comply with details shown to fabricate sheet metal flashing and trim that fit substrates and result in waterproof and weather-resistant performance once installed. Verify shapes and dimensions of surfaces to be covered before fabricating sheet metal.

C. Form exposed sheet metal work that is without excessive oil canning, buckling, and tool marks and that is true to line and levels indicated, with exposed edges folded back to form hems.

D. Seams: Fabricate nonmoving seams in aluminum with flat-lock seams. Form seams and seal with epoxy seam sealer. Rivet joints for additional strength.

E. Expansion Provisions: Comply with SMACNA standards. Space movement joints at maximum of 10 feet with no joints allowed within 24 inches of corner or intersection. Where lapped or bayonet-type expansion provisions in work cannot be used or would not be sufficiently weatherproof and waterproof, form expansion joints of intermeshing hooked flanges, not less than 1 inch deep, filled with mastic sealant (concealed within joints).

F. Sealed Joints: Form nonexpansion, but movable, joints in metal to accommodate elastomeric sealant to comply with SMACNA standards.

G. Separate metal from noncompatible metal or corrosive substrates by coating concealed surfaces at locations of contact with asphalt mastic or other permanent separation as recommended by manufacturer.

H. Conceal fasteners and expansion provisions where possible. Exposed fasteners are not allowed on faces of sheet metal exposed to public view.

I. Fabricate cleats and attachment devices from same material as sheet metal component being anchored or from compatible, noncorrosive metal recommended by sheet metal manufacturer.

   1. Size: As recommended by SMACNA manual or sheet metal manufacturer for application, but never less than thickness of metal being secured.

J. Form gutters and downspouts of profiles and sizes indicated and as required to properly collect and remove water. Fabricate complete with required connection pieces.

   1. Form sections square, true, and accurate in size, in maximum possible lengths and free of distortions and defects detrimental to appearance or performance hem exposed edges. Allow for expansion at joints. Miter gutter corners.

PART 3 EXECUTION

3.01 INSTALLATION - GENERAL

A. Comply with manufacturer's instructions and recommendations for handling and installation of flashing and sheet metal work.

B. Performance: Coordinate the work with other work for the correct sequencing of items which make up the entire membrane or system of weatherproofing or waterproofing and rain drainage. It is required that the flashing and sheet metal work be permanently watertight, and not deteriorate in excess of manufacturer's published limitations.

C. Examine substrates and conditions under which sheet metal flashing and trim are to be installed and verify that work may properly commence. Do not proceed with installation until unsatisfactory conditions have been corrected.

3.02 INSTALLATION – SHEET METAL

A. General: Unless otherwise indicated, install sheet metal flashing and trim to comply with performance requirements, manufacturer's installation instructions, and SMACNA's "Architectural Sheet Metal Manual". Anchor units of work securely in place by methods indicated, providing for thermal expansion of metal units; conceal fasteners where possible, and set units true to line and level as indicated. Install work with laps, joints, and seams that will be permanently watertight and weatherproof.

B. Install exposed sheet metal work that is without excessive oil canning, buckling, and tool marks and that is true to line and levels indicated, with exposed edges folded back to form hems. Install sheet metal flashing and trim to fit substrates and to result in waterproof and weather-resistant performance. Verify shapes and dimensions of surfaces to be covered before fabricating sheet metal.

C. Sealed Joints: Form nonexpansion, but movable, joints in metal to accommodate elastomeric sealant to comply with SMACNA standards. Fill joint with sealant and form metal to completely conceal sealant.

1. Use joint adhesive for nonmoving joints specified not to be soldered.

D. Seams: Fabricate nonmoving seams in sheet metal with flat-lock seams. Tin edges to be seamed, form seams, and solder. Fabricate nonmoving seams in aluminum with flat-lock seams. Form seams and seal with epoxy seam sealer. Rivet joints for additional strength.

E. Separations: Separate metal from noncompatible metal or corrosive substrates by coating concealed surfaces, at locations of contact, with asphalt mastic or other permanent separation as recommended by manufacturer.

F. Counter-flash mechanical, electrical, and other items projecting through membrane roofing.

1. Pipes and Conduit Penetrations:

a. Flash with lead sheet extending flanges 9" from wall or pipe.

b. Extend flashing up pipe and turn down inside pipe a minimum 2".

c. On tall pipe extend flashing a minimum of 9" up side of pipe and cover with galvanized malleable iron collar with draw band; seal top of collar against vent pipe.

d. Set flanges on top of sheet roofing and strip in with a 12" wide section of roofing.

G. Roof-Drainage System: Install drainage items fabricated from sheet metal, with straps, adhesives, and anchors recommended by SMACNA's Manual or the item manufacturer, to drain roof in the most efficient manner. Coordinate roof-drain flashing installation with roof-drainage system installation. Spike type anchors will not be permitted. Coordinate flashing and sheet metal items for steep-sloped roofs with roofing installation.

3.03 INSTALLATION - WALL FLASHINGS

A. Refer to Section 04 20 00 "Unit Masonry" for masonry flashing requirements.

B. Membrane Wall Flashing:

1. Install at all windows, doors, and other locations as shown on Drawings in strict accordance with manufacturer's specifications to provide a watertight enclosure.

2. Substrate must be smooth, clean, dry and free of voids, spalled areas, loose substrate, loose nails, other sharp protrusions or other matter that will hinder the adhesion or regularity of the flashing tape installation. Clean loose dust or dirt from surface wherever flashing tape is to be applied as recommended by flashing manufacturer.

3. Apply membrane over approved primer. Membrane wall flashings shall overlap one to two inches, as recommended by manufacturer. All membrane overlaps shall be firmly

rolled immediately following installation to minimize bubbles caused by outgassing air vapor.

4. Apply a bead of sealant along top edge of flashing membrane and along seams and cuts as required.

C. Other Openings and Penetrations: Provide flashings for other openings as required to provide weathertight barrier. Install lapped components to direct water to exterior of building.

3.04 INSTALLATION ROOF FLASHING

A. Install Roof Flashing as follows:

1. General: Install sheet metal flashing and trim to comply with performance requirements, sheet metal manufacturer's written installation instructions, and cited sheet metal standard. Provide concealed fasteners where possible, and set units true to line, levels, and slopes. Install work with laps, joints, and seams that are permanently watertight and weather resistant.

2. Roof-Penetration Flashing: Coordinate installation of roof-penetration flashing with installation of roofing and other items penetrating roof. Seal with **elastomeric** sealant and clamp flashing to pipes that penetrate roof.

3.05 CLEANING AND PROTECTION

A. Clean exposed metal surfaces, removing substances that might cause corrosion of metal or deterioration of finishes.

B. Provide final protection and maintain conditions that ensure sheet metal flashing and trim work during construction is without damage or deterioration other than natural weathering at the time of Substantial Completion.

END OF SECTION 07 62 00

SECTION 07 84 00
FIRESTOPPING

PART 1 GENERAL

1.01 SUMMARY

A. Section Includes:

1. Penetrations through fire-resistance-rated floor and roof construction, including both empty openings and openings containing cables, pipes, ducts, conduits, and other penetrating items.

2. Penetrations through fire-resistance-rated walls and partitions, including both empty openings and openings containing cables, pipes, ducts, conduits, and other penetrating items.

B. Related Sections:

1. Section 07 92 00 – Joint Sealants

2. Refer to Division 21 and 23 Sections for additional requirements.

1.02 SYSTEM DESCRIPTION

A. General: Provide firestopping systems that are produced and installed to resist the spread of fire, according to requirements indicated, and the passage of smoke and other gases.

B. Performance Requirements:

1. F-Rated Through-Penetration Firestop Systems: Provide through-penetration firestop systems with F ratings indicated, as determined per ASTM E 814, but not less than that equaling or exceeding the fire-resistance rating of the constructions penetrated.

2. T-Rated Through-Penetration Firestop Systems: Provide through-penetration firestop systems with T ratings, in addition to F ratings, as determined per ASTM E 814, where indicated and where systems protect penetrating items exposed to contact with adjacent materials in occupiable floor areas. T-rated assemblies are required where the following conditions exist:

a. Where firestop systems protect penetrations located outside of wall cavities.

b. Where firestop systems protect penetrations located outside fire-resistive shaft enclosures.

c. Where firestop systems protect penetrations located in construction containing doors required to have a temperature-rise rating.

d. Where firestop systems protect penetrating items larger than a 4-inch-diameter nominal pipe or 16 sq. in. in overall cross-sectional area.

3. Fire-Resistive Joint Sealants: Provide joint sealants with fire-resistance ratings indicated, as determined per ASTM E 119, but not less than that equaling or exceeding the fire-resistance rating of the construction in which the joint occurs.

4. For firestopping exposed to view, traffic, moisture, and physical damage, provide products that do not deteriorate when exposed to these conditions.

a. For piping penetrations for plumbing and wet-pipe sprinkler systems, provide moisture-resistant through-penetration firestop systems.

b. For floor penetrations with annular spaces exceeding 4 inches or more in width and exposed to possible loading and traffic, provide firestop systems capable of supporting the floor loads involved either by installing floor plates or by other means.

C. For penetrations involving insulated piping, provide through-penetration firestop systems not requiring removal of insulation.

1.03 SUBMITTALS

A. General: Submit the following in accordance with Conditions of Contract and Division 01 Specification Sections:

1. Provide product data for each type of product specified.

a. Certification by firestopping manufacturer that products supplied comply with local regulations controlling use of volatile organic compounds (VOCs) and are nontoxic to building occupants.

2. Provide product certificates signed by manufacturers of firestopping products certifying that their products comply with specified requirements.

3. Provide product test reports from, and based on tests performed by, a qualified testing and inspecting agency evidencing compliance of firestopping with requirements based on comprehensive testing of current products.

4. Through-Penetration Firestop System Schedule: Indicate locations of each through-penetration firestop system, along with the following information:

a. Types of penetrating items.

b. Types of constructions penetrated, including fire-resistance ratings and, where applicable, thicknesses of construction penetrated.

c. Through-penetration firestop systems for each location identified by firestop design designation of qualified testing and inspecting agency.

1.04 QUALITY ASSURANCE

A. Fire-Test-Response Characteristics: Provide firestopping that complies with the following requirements and those specified under the "System Performance Requirements" article:

1. Firestopping tests are performed by a qualified testing and inspecting agency. A qualified testing and inspecting agency is UL, Warnock Hersey, or another agency performing testing and follow-up inspection services for firestop systems that is acceptable to authorities having jurisdiction.

2. Through-penetration firestop systems are identical to those tested per ASTM E 814 under conditions where positive furnace pressure differential of at least 0.01 inch of water is maintained at a distance of 0.78 inch below the fill materials surrounding the penetrating items in the test assembly. Provide rated systems complying with the following requirements:

a. Through-penetration firestop system products bear classification marking of qualified testing and inspecting agency.

b. Through-penetration firestop systems correspond to those indicated by reference to through-penetration firestop system designations listed by UL in their "Fire Resistance Directory", by Warnock Hersey or by another qualified testing and inspecting agency.

B. Information within construction documents referring to specific design designations of through-penetration firestop systems is intended to establish requirements for performance based on conditions that are expected to exist during installation. Any changes in conditions and designated systems require the Architect's prior approval. Submit documentation showing that the performance of proposed substitutions equals or exceeds that of the systems they would replace and are acceptable to authorities having jurisdiction.

C. Single-Source Responsibility: Obtain through-penetration firestop systems for each kind of penetration and construction condition indicated from a single manufacturer.

D. Provide firestopping products containing no detectable asbestos as determined by the method specified in 40 CFR Part 763, Subpart F, Appendix A, Section 1, "Polarized Light Microscopy".

E. Coordinate Work: Coordinate construction of openings and penetrating items to ensure that designated through-penetration firestop systems are installed per specified requirements.

1.05 DELIVERY, STORAGE, AND HANDLING

A. Deliver firestopping products to project site in original, unopened containers or packages with intact and legible manufacturers' labels identifying product and manufacturer, date of manufacture, lot number, shelf life, if applicable, qualified testing and inspecting agency's classification marking applicable to project, curing time, and mixing instructions for multicomponent materials.

B. Store and handle firestopping materials to prevent their deterioration or damage due to moisture, temperature changes, contaminants, or other causes.

1.06 PROJECT/SITE CONDITIONS

A. Environmental Conditions: Do no install firestopping when ambient or substrate temperatures are outside limits permitted by firestopping manufacturers or when substrates are wet due to rain, frost, condensation, or other causes.

B. Ventilation: Ventilate firestopping per firestopping manufacturers' instructions by natural means or, where this is inadequate, forced air circulation.

PART 2 PRODUCTS

2.01 FIRESTOPPING, GENERAL

A. Compatibility: Provide firestopping composed of components that are compatible with each other, the substrates forming openings, and the items, if any, penetrating the firestopping under conditions of service and application, as demonstrated by firestopping manufacturer based on testing and field experience.

B. VOC Content: Provide penetration firestopping that complies with the following limits for VOC content when calculated according to 40 CFR 59, Subpart D (EPA Method 24):

1. Submit manufacturer's certification that products comply with SCAQMD #1168.
2. Architectural Sealants: 250 g/L.
3. Sealant Primers for Nonporous Substrates: 250 g/L.
4. Sealant Primers for Porous Substrates: 775 g/L.

C. Accessories: Provide components for each firestopping system that are needed to install fill materials and to comply with "System Performance Requirements" article in Part 1. Use only components specified by the firestopping manufacturer and approved by the qualified testing and inspecting agency for the designated fire-resistance-rated systems. Accessories include, but are not limited to, the following items:

1. Permanent Forming/Damming/Backing Materials, Including the Following:
   a. Semi-refractory Fiber (mineral wool) Insulation
   b. Ceramic Fiber
   c. Sealants Used in Combination with Other Forming/Damming Materials to Prevent Leakage of Fill Materials in Liquid State
   d. Fire-rated Formboard
2. Temporary Forming materials
3. Substrate Primers
4. Collars

5. Steel Sleeves

2.02 FIRE BARRIER PENETRATION SEALING SYSTEMS SHALL BE AS MANUFACTURED BY ONE OF THE FOLLOWING:

A. Approved Manufacturers:

1. Tremco, Inc. an RPM Company (800-562-2728)
2. 3M Brand Fire Protection Products (800-328-1687)
3. "Firemaster", by Thermal Ceramics (800-245-8008)
4. Rector Seal (800-231-3345)
5. Hilti, Inc. (800-879-6000)
6. Dow Corning Corp. (800-248-2481)
7. ProSet Systems, Inc. (800-262-5355)

2.03 FIRESTOPPING, GENERAL

A. Compatibility: Provide through-penetration firestop systems that are compatible with one another; with the substrates forming openings; and with the items, if any, penetrating through-penetration firestop systems, under conditions of service and application, as demonstrated by through-penetration firestop system manufacturer based on testing and field experience.

1. Under normal environmental conditions, all material used shall be non-corrosive to metal and compatible with synthetic cable jackets. When exposed to flame or heat, it should be capable of expanding up to ten times.

B. Accessories: Provide components for each through-penetration firestop system that are needed to install fill materials and to comply with Part 1 "Performance Requirements" Article. Use only components specified by through-penetration firestop system manufacturer and approved by qualified testing and inspecting agency for firestop systems indicated. Accessories include, but are not limited to, the following items:

1. Permanent forming/damming/backing materials, including the following:

a. Slag-/rock-wool-fiber insulation.

b. Sealants used in combination with other forming/damming/backing materials to prevent leakage of fill materials in liquid state.

c. Fire-rated form board.

d. Fillers for sealants.

e. Joint Spray: Fire-rated mastic for construction joints that allows movement in joints such as expansion joints and where two assemblies meet.

2. Temporary forming materials.
3. Substrate primers.
4. Collars.
5. Steel sleeves.

2.04 INSTALLATION DETAILS: REFER TO DRAWINGS.

A. Systems shall include all necessary items for use in areas as shown on the Drawings.

PART 3 EXECUTION

3.01 EXAMINATION

A. Examine substrates and conditions, with installer present, for compliance with requirements for opening configurations, penetrating items, substrates, and other conditions affecting performance of firestopping. Do not proceed with installation until unsatisfactory conditions have been corrected.

3.02 PREPARATION

A. Surface Cleaning: Clean out openings and joints immediately prior to installing firestopping to comply with recommendations of firestopping manufacturer and the following requirements:

1. Remove all foreign materials from surfaces of opening and joint substrates and from penetrating items that could interfere with adhesion of firestopping.

2. Clean opening and joint substrates and penetrating items to produce clean, sound surfaces capable of developing optimum bond with firestopping. Remove loose particles remaining from cleaning operation.

3. Remove laitance and form release agents from concrete.

B. Priming: Prime substrates where recommended by firestopping manufacturer using that manufacturer's recommended products and methods. Confine primers to areas of bond. Do not allow spillage and migration onto exposed surfaces.

C. Masking Tape: Use masking tape to prevent firestopping from contacting adjoining surfaces that will remain exposed upon completion of work and that would otherwise be permanently stained or damaged by such contact or by cleaning methods used to remove smears from firestopping materials. Remove tape as soon as it is possible to do so without disturbing firestopping's seal with substrates.

3.03 INSTALLING THROUGH-PENETRATION FIRESTOPS

A. General: Comply with the "System Performance Requirements" article in Part 1 and the through-penetration firestop manufacturer's installation instructions and drawings pertaining to products and applications indicated.

B. Install forming/damming materials and other accessories of types required to support fill materials during their application and in the position needed to produce the cross-sectional shapes and depths required to achieve fire ratings of designated through-penetration firestop systems. After installing fill materials, remove combustible forming materials and other accessories not indicated as permanent components of firestop systems.

C. Install fill materials for through-penetration firestop systems by proven techniques to produce the following results:

1. Completely fill voids and cavities formed by openings, forming materials, accessories, and penetrating items.

2. Apply materials so they contact and adhere to substrates formed by openings and penetrating items.

3. For fill materials that will remain exposed after completing work, finish to produce smooth, uniform surfaces that are flush with adjoining finishes.

3.04 CLEANING

A. Clean-off excess fill materials and sealants adjacent to openings and joints as work progresses by methods and with cleaning materials approved by manufacturers of firestopping products and of products in which opening and joints occur.

B. Protect firestopping during and after curing period from contact with contaminating substances or from damage resulting from construction operations or other causes so that they are without deterioration or damage at time of Substantial Completion. If, despite such protection, damage or deterioration occurs, cut out and remove damaged or deteriorated firestopping immediately and install new materials to produce firestopping complying with specified requirements.

C. Promptly remove any excess materials from any exposed finish surfaces. Repair floors, walls, or other surfaces which have been stained, marred, or otherwise damaged during installation of fire barrier materials.

END OF SECTION 07 84 00

FIRESTOPPING DRAWINGS

CONCRETE FLOOR / WALL ASSEMBLIES

CONCRETE MASONRY UNIT (CMU) WALL ASSEMBLIES

08033
FIRESTOPPING
07 84 00 (07840)

2006

UL Online Certifications Directory

XHEZ.C-AJ-1226
Through-penetration Firestop Systems

Page Bottom

Through-penetration Firestop Systems

See General Information for Through-penetration Firestop Systems

System No. C-AJ-1226

August 26, 2005

F Rating — 3 Hr

T Rating — 0 Hr

L Rating At Ambient — Less Than 1 CFM/Sq Ft

L Rating At 400 F — 4 CFM/Sq Ft

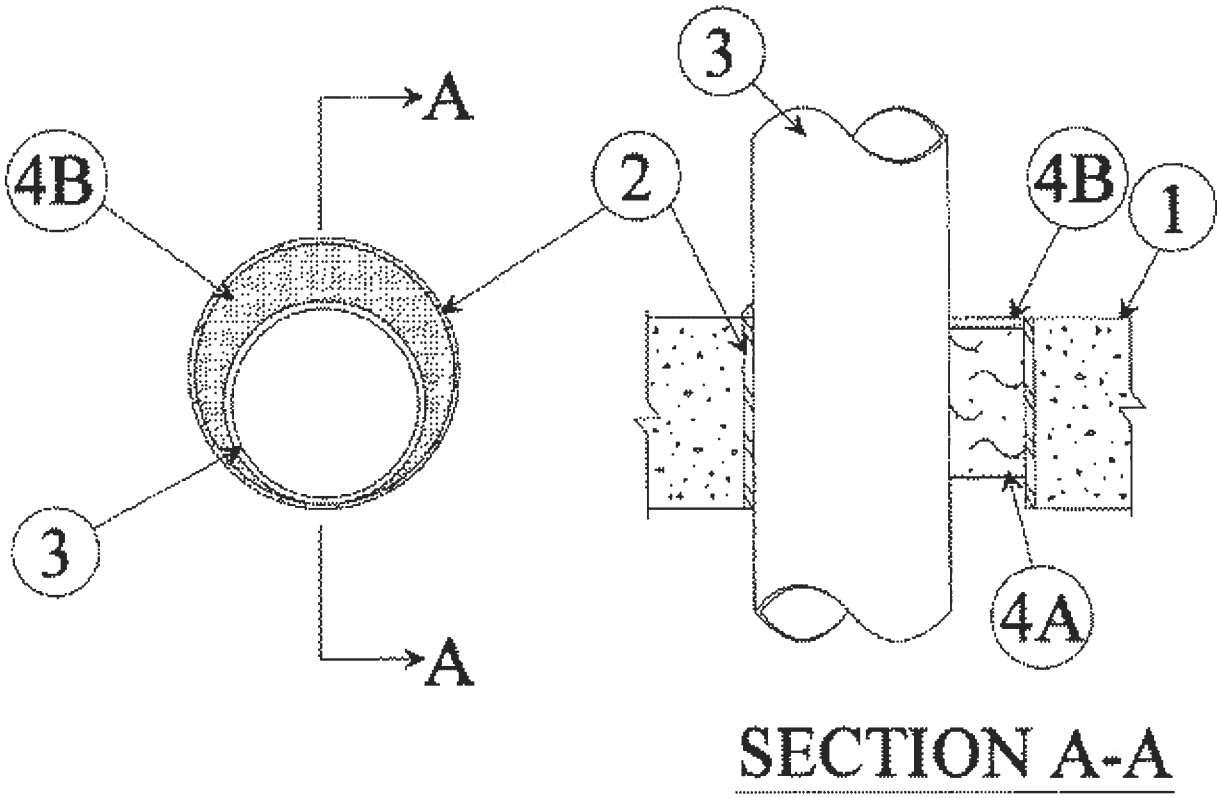

1. **Floor or Wall Assembly —** Min 4-1/2 in. thick reinforced lightweight or normal weight (100-150 pcf) concrete. Wall may also be constructed of any UL Classified **Concrete Blocks*.** Max diam of opening is 32 in.

2. **Metallic Sleeve —** (Optional) Nom 32 in. diam (or smaller) Schedule 40 (or heavier) steel sleeve cast or grouted into floor or wall assembly, flush with floor or wall surfaces or extending a max of 3 in. above floor or beyond both surfaces of wall.

2A. **Sheet Metal Sleeve —** (Optional) Max 6 in. diam, min 26 ga galv steel provided with a 26 ga galv steel square flange spot welded to the sleeve at approx mid-height and sized to be a min of 2 in. larger than the sleeve diam. The sleeve is to be cast in place and may extend a max of 4 in. below the bottom of the deck and a max of 1 in.

above the top surface of the concrete floor.

2B. **Sheet Metal Sleeve —** (Optional) - Max 12 in. diam, min 24 ga galv steel provided with a 24 ga galv steel square flange spot welded to the sleeve at approx mid-height and sized to be a min of 2 in. larger than the sleeve diam. The sleeve is to be cast in place and may extend a max of 4 in. below the bottom of the deck and a max of 1 in. above the top surface of the concrete floor.

3. **Through-Penetrant —** One metallic pipe, tube or conduit to be installed either concentrically or eccentrically within the firestop system. The annular space between penetrant and periphery of opening shall be min 0 in. (point contact) to max 1-7/8 in. Penetrant may be installed with continuous point contact. Penetrant to be rigidly supported on both sides of floor or wall assembly. The following types and sizes of metallic penetrants may be used:

A. **Steel Pipe —** Nom 30 in. diam (or smaller) Schedule 10 (or heavier) steel pipe.

B. **Iron Pipe —** Nom 30 in. diam (or smaller) cast or ductile iron pipe.

C. **Copper Pipe —** Nom 6 in. diam (or smaller) Regular (or heavier) copper pipe.

D. **Copper Tubing —** Nom 6 in. diam (or smaller) Type L (or heavier) copper tubing.

E. **Conduit —** Nom 6 in. diam (or smaller) steel conduit.

F. **Conduit —** Nom 4 in. diam (or smaller) steel electrical metallic tubing (EMT).

4. **Firestop System —** The firestop system shall consist of the following:

A. **Packing Material —** Min 4 in. thickness of min 4 pcf mineral wool batt insulation firmly packed into opening as a permanent form. Packing material to be recessed from top surface of floor or sleeve or from both surfaces of wall or sleeve as required to accommodate the required thickness of fill material.

B. **Fill, Void or Cavity Material* — Sealant —** Min 1/4 in. thickness of fill material applied within the annulus, flush with top surface of floor or sleeve or with both surfaces of wall or sleeve. At the point or continuous contact locations between penetrant and concrete or sleeve, a min 1/4 in. diam bead of fill material shall be applied at the concrete or sleeve/ pipe penetrant interface on the top surface of floor and on both surfaces of wall.

HILTI CONSTRUCTION CHEMICALS, DIV OF

HILTI INC — FS-One Sealant

*Bearing the UL Classification Mark

Last Updated on 2005-08-26

Questions? Notice of Disclaimer Page Top

Copyright © 2006 Underwriters Laboratories Inc.®

The appearance of a company's name or product in this database does not in itself assure that products so identified have been manufactured under UL's Follow-Up Service. Only those products bearing the UL Mark should be considered to be Listed and covered under UL's Follow-Up Service. Always look for the Mark on the product.

UL permits the reproduction of the material contained in the Online Certification Directory subject to the following conditions: 1. The Guide Information, Designs and/or Listings (files) must be presented in their entirety and in a non-misleading manner, without any manipulation of the data (or drawings). 2. The statement "Reprinted from the Online Certifications Directory with permission from Underwriters Laboratories Inc." must appear adjacent to the extracted material. In addition, the reprinted material must include a copyright notice in the following format: "Copyright © 2006 Underwriters Laboratories Inc.®"

An independent organization working for a safer world with integrity, precision and knowledge.

UL Online Certifications Directory

XHEZ.C-AJ-1291
Through-penetration Firestop Systems

Page Bottom

Through-penetration Firestop Systems

See General Information for Through-penetration Firestop Systems

System No. C-AJ-1291

December 04, 2001

F Rating — 2 Hr

T Rating — 0 Hr

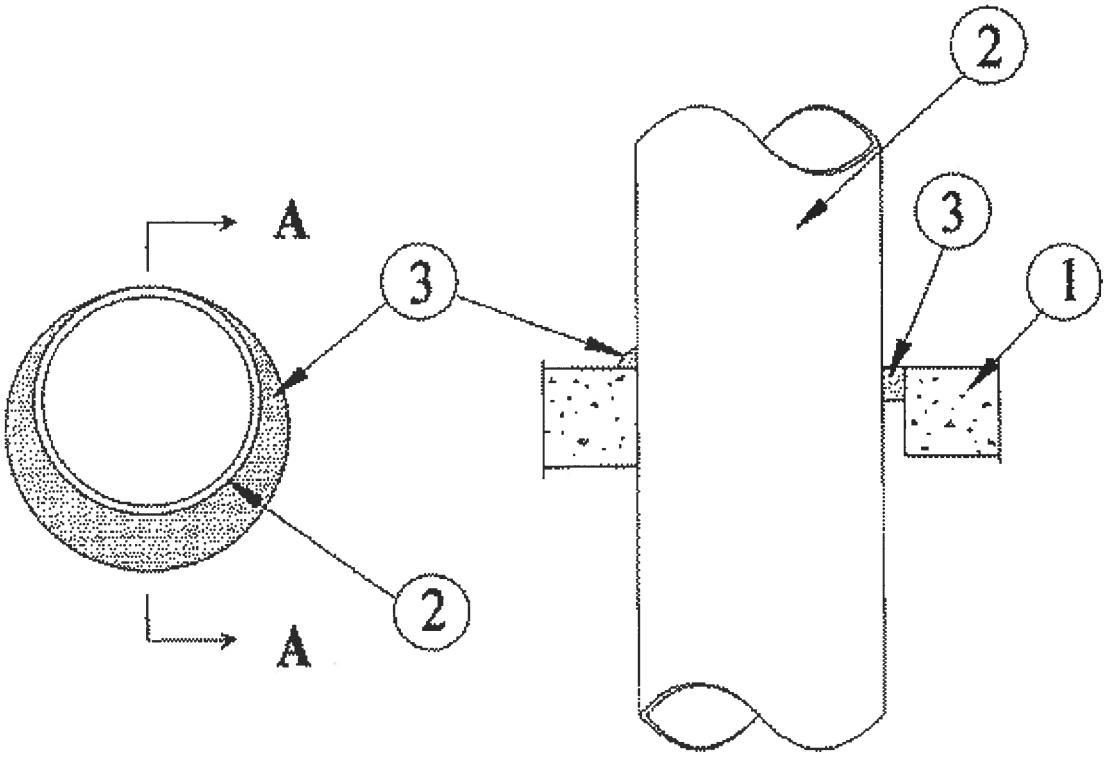

SECTION A-A

1. **Floor or Wall Assembly —** Min 2-1/2 in. thick reinforced lightweight or normal weight (100-150 pcf) concrete. Wall may also be constructed of any UL Classified **Concrete Blocks*.** Max diam of opening is 30-7/8 in.

See **Concrete Blocks** (CAZT) category in the Fire Resistance Directory for names of manufacturers.

2. **Through-Penetrant —** One metallic pipe or conduit to be installed either concentrically or eccentrically within the firestop system. The annular space between pipe or conduit and periphery of opening shall be min 0 in. to max 7/8 in. Pipe or conduit to be rigidly supported on both sides of floor or wall assembly. The following types and sizes of metallic pipes or conduits may be used:

A. **Steel Pipe —** Nom 30 in. diam (or smaller) Schedule 10 (or heavier) steel pipe.

B. **Iron Pipe —** Nom 30 in. diam (or smaller) cast or ductile iron pipe.

C. **Copper Pipe —** Nom 6 in. diam (or smaller) Regular (or heavier) copper pipe.

D. **Copper Tubing —** Nom 6 in. diam (or smaller) Type L (or heavier) copper tubing.

E. **Conduit —** Nom 6 in. diam (or smaller) steel conduit.

F. **Conduit —** Nom 4 in. diam (or smaller) steel electrical metallic tubing (EMT).

3. **Fill, Void or Cavity Material* — Sealant —** Min 1/2 in. thickness of fill material applied within the annulus, flush with top surface of floor or with both surfaces of wall. At the point contact location between pipe and concrete, a min 1/4 in. diam bead of fill material shall be applied at the concrete/pipe interface on the top surface of floor and on both surfaces of wall.

HILTI CONSTRUCTION CHEMICALS, DIV OF

HILTI INC — FS — ONE Sealant

*Bearing the UL Classification Mark

Last Updated on 2001-12-04

Questions? Notice of Disclaimer Page Top

Copyright © 2006 Underwriters Laboratories Inc.®

The appearance of a company's name or product in this database does not in itself assure that products so identified have been manufactured under UL's Follow-Up Service. Only those products bearing the UL Mark should be considered to be Listed and covered under UL's Follow-Up Service. Always look for the Mark on the product.

UL permits the reproduction of the material contained in the Online Certification Directory subject to the following conditions: 1. The Guide Information, Designs and/or Listings (files) must be presented in their entirety and in a non-misleading manner, without any manipulation of the data (or drawings). 2. The statement "Reprinted from the Online Certifications Directory with permission from Underwriters Laboratories Inc." must appear adjacent to the extracted material. In addition, the reprinted material must include a copyright notice in the following format: "Copyright © 2006 Underwriters Laboratories Inc.®"

An independent organization working for a safer world with integrity, precision and knowledge.

UL Online Certifications Directory

XHEZ.C-AJ-1421
Through-penetration Firestop Systems

Page Bottom

Through-penetration Firestop Systems

See General Information for Through-penetration Firestop Systems

System No. C-AJ-1421

April 26, 2004

F Rating — 2 and 3 Hr (See Item 4B)

T Rating — 0 Hr

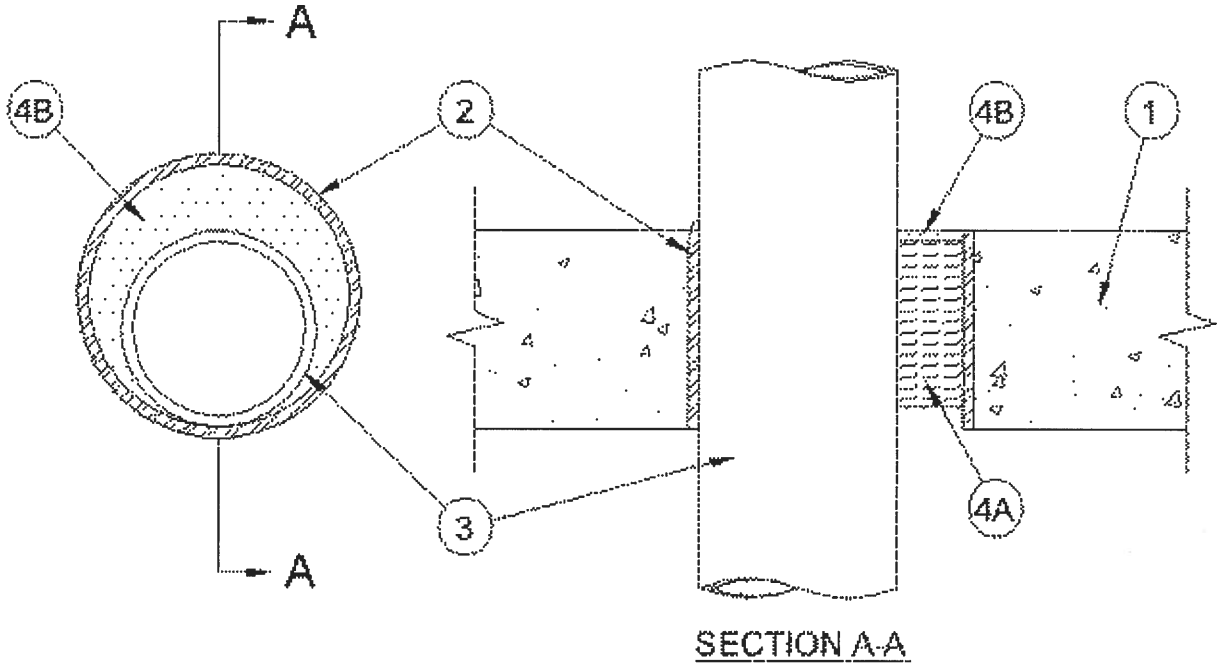

1. **Floor or Wall Assembly —** Min 4-1/2 in. (114 mm) thick reinforced lightweight or normal weight (100-150 pcf or 1600-2400 kg/m^3) concrete. Wall may also be constructed of any UL Classified **Concrete Blocks***. Max diam of opening is 6 in. (152 mm).

See **Concrete Blocks** (CAZT) category in the Fire Resistance Directory for names of manufacturers.

2. **Metallic Sleeve —** (Optional) Nom 6 in. (152 mm) diam (or smaller) Schedule 40 (or heavier) steel sleeve cast or grouted into floor or wall assembly, flush with floor or wall surfaces.

3. **Through-Penetrant —** One metallic pipe or conduit to be installed either concentrically or eccentrically within the firestop system. The annular space between pipe, tube or conduit and periphery of opening shall be min 0 in. (0 mm) (point contact) to max 5-3/8 in. (137 mm). Pipe or conduit to be rigidly supported on both sides of floor or wall assembly. The following types and sizes of metallic pipes or conduits may be used:

A. **Steel Pipe —** Nom 4 in. (102 mm) diam (or smaller) Schedule 10 (or heavier) steel pipe.

B. **Iron Pipe —** Nom 4 in. (102 mm) diam (or smaller) cast or ductile iron pipe.

C. **Copper Pipe —** Nom 4 in. (102 mm) diam (or smaller) Regular (or heavier) copper pipe.

D. **Copper Tubing —** Nom 4 in. (102 mm) diam (or smaller) Type L (or heavier) copper tubing.

E. **Conduit —** Nom 4 in. (102 mm) diam (or smaller) steel conduit.

F. **Conduit —** Nom 4 in. (102 mm) diam (or smaller) steel electrical metallic tubing (EMT).

4. **Firestop System —** The firestop system shall consist of the following:

A. **Packing Material —** Min 4 in. (102 mm) thickness of min 4 pcf (64 kg/m^3) mineral wool batt insulation firmly packed into opening as a permanent form. Packing material to be recessed from top surface of floor or from both surfaces of wall as required to accommodate the required thickness of fill material.

B. **Fill, Void or Cavity Material* - Sealant —** Min 1/4 in. (6 mm) thickness of fill material applied within the annulus, flush with top surface of floor or with both surfaces of wall. For 3 Hr rated assemblies, a min 1/4 in. (6 mm) diam bead of fill material shall be applied at the concrete/pipe interface at the point contact location on the top surface of floor and on both surfaces of wall.

HILTI CONSTRUCTION CHEMICALS, DIV OF

HILTI INC — FS-ONE Sealant or CP604 Self-Leveling Firestop Sealant. CP604 shall be used in floor applications only.

When CP604 is used, F Rating is 2 Hr.

*Bearing the UL Classification Mark

Last Updated on 2004-04-26

Questions? Notice of Disclaimer Page Top

Copyright © 2006 Underwriters Laboratories Inc.®

The appearance of a company's name or product in this database does not in itself assure that products so identified have been manufactured under UL's Follow-Up Service. Only those products bearing the UL Mark should be considered to be Listed and covered under UL's Follow-Up Service. Always look for the Mark on the product.

UL permits the reproduction of the material contained in the Online Certification Directory subject to the following conditions: 1. The Guide Information, Designs and/or Listings (files) must be presented in their entirety and in a non-misleading manner, without any manipulation of the data (or drawings). 2. The statement "Reprinted from the Online Certifications Directory with permission from Underwriters Laboratories Inc." must appear adjacent to the extracted material. In addition, the reprinted material must include a copyright notice in the following format: "Copyright © 2006 Underwriters Laboratories Inc.®"

An independent organization working for a safer world with integrity, precision and knowledge.

UL Online Certifications Directory

XHEZ.C-AJ-3180
Through-penetration Firestop Systems

Page Bottom

Through-penetration Firestop Systems

See General Information for Through-penetration Firestop Systems

System No. C-AJ-3180

January 28, 2003

F Rating — 3 Hr

T Rating — 0 Hr

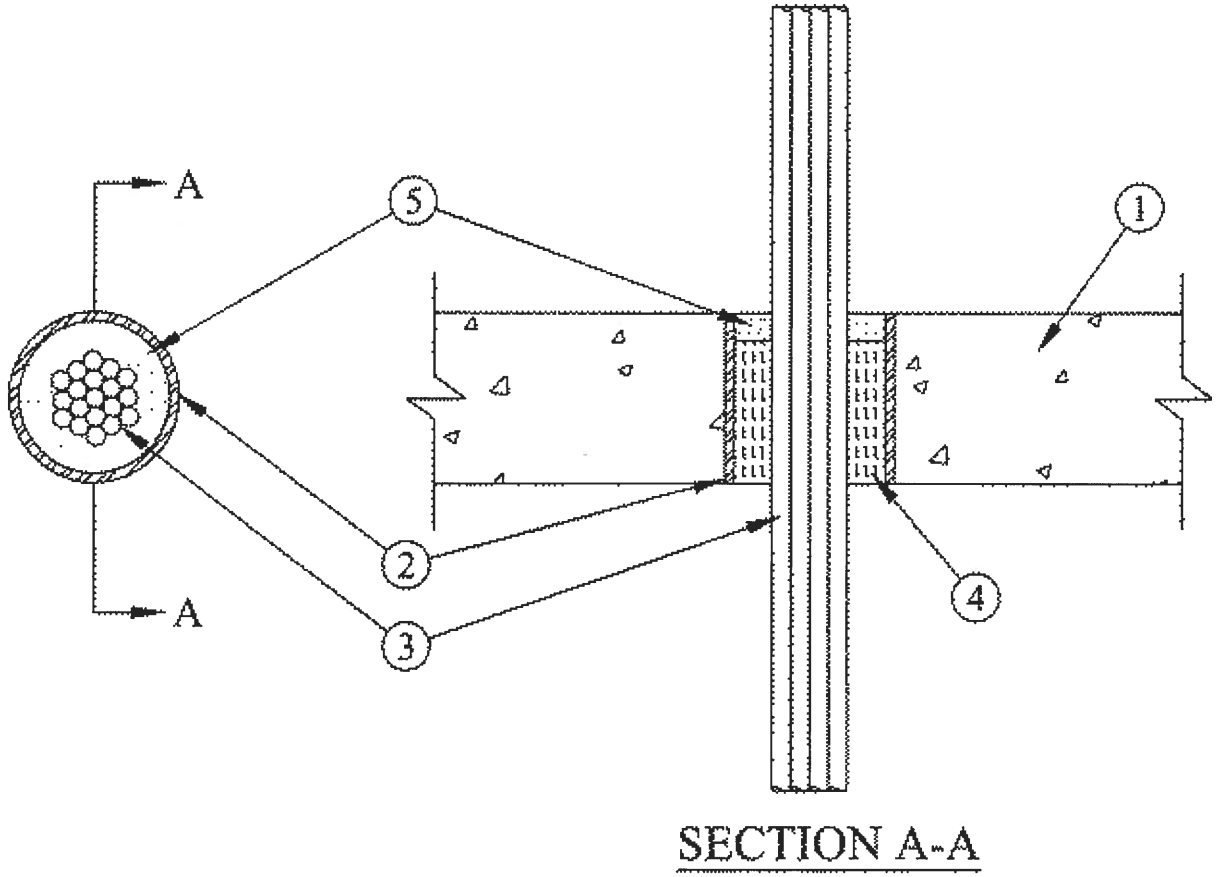

1. **Floor or Wall Assembly —** Min 4-1/2 in. thick reinforced lightweight or normal weight (100-150 pcf) concrete floor or min 4-3/4 in. thick reinforced lightweight or normal weight concrete wall. Wall may also be constructed of any UL Classified **Concrete Blocks*.** Max diam of opening is 6 in.

See **Concrete Blocks** (CAZT) category in the Fire Resistance Directory for names of manufacturers.

2. **Steel Sleeve —** (Optional) — Nom 6 in. diam (or smaller) Schedule 40 (or heavier) steel pipe cast or grouted into floor or wall assembly, flush with floor or wall surfaces.

3. **Cables —** Aggregate cross-sectional area of cables in opening to be max 45 percent of the aggregate

cross-sectional area of the opening. Cables to be rigidly supported on both sides of floor or wall assembly. Any combination of the following types and sizes of metallic conductor or fiber optic cable may be used:

A. Max 500 kcmil single copper connector power cable with thermoplastic insulation and polyvinyl chloride (PVC) jacket.

B. Max 300 pair No. 24 AWG copper conductor telecommunication cables with polyvinyl chloride (PVC) insulation and jacket material.

C. Max 7/C copper conductor No. 12 AWG multiconductor power and control cables with polyvinyl chloride (PVC) or cross-linked polyethylene (XLPE) insulation and PVC jacket.

D. Multiple fiber optical communication cables jacketed with PVC and having a max outside diam of 1/2 in.

E. Max 3/C copper conductor No. 12 AWG with bare aluminum ground, polyvinyl chloride (PVC) insulated steel, Metal-clad cable.

F. Max 3/C with ground 2/0 AWG copper conductor SER cable with cross-linked polyethylene (XLPE) insulation and polyvinyl chloride (PVC) jacket.

G. RG/U coaxial cable with polyethylene (PE) insulation and polyvinyl chloride (PVC) jacket having a max outside diameter of ½ in.

4. **Packing Material —** Min 4-1/4 in. thickness of min 4 pcf mineral wool batt insulation firmly packed into opening as a permanent form. Packing material to be recessed from top surface of floor to accommodate the required thickness of fill material.

5. **Fill, Void or Cavity Material* — Sealant —** Min 1/4 in. thickness of fill material applied within the annulus, flush with top surface of floor or with both surfaces of wall.

HILTI CONSTRUCTION CHEMICALS, DIV OF

HILTI INC — FS-One Sealant.

*Bearing the UL Classification Mark

Last Updated on 2003-01-28

Questions? Notice of Disclaimer Page Top

Copyright © 2006 Underwriters Laboratories Inc.®

The appearance of a company's name or product in this database does not in itself assure that products so identified have been manufactured under UL's Follow-Up Service. Only those products bearing the UL Mark should be considered to be Listed and covered under UL's Follow-Up Service. Always look for the Mark on the product.

UL permits the reproduction of the material contained in the Online Certification Directory subject to the following conditions: 1. The Guide Information, Designs and/or Listings (files) must be presented in their entirety and in a non-misleading manner, without any manipulation of the data (or drawings). 2. The statement "Reprinted from the Online Certifications Directory with permission from Underwriters Laboratories Inc." must appear adjacent to the extracted material. In addition, the reprinted material must include a copyright notice in the following format: "Copyright © 2006 Underwriters Laboratories Inc.®"

An independent organization working for a safer world with integrity, precision and knowledge.

UL Online Certifications Directory

XHEZ.C-AJ-5090
Through-penetration Firestop Systems

Page Bottom

Through-penetration Firestop Systems

See General Information for Through-penetration Firestop Systems

System No. C-AJ-5090

January 04, 1997

F Rating — 3 Hr

T Rating — 0 Hr

L Rating At Ambient — 4 CFM/Sq Ft

L Rating At 400 F — Less Than 1 CFM/Sq Ft

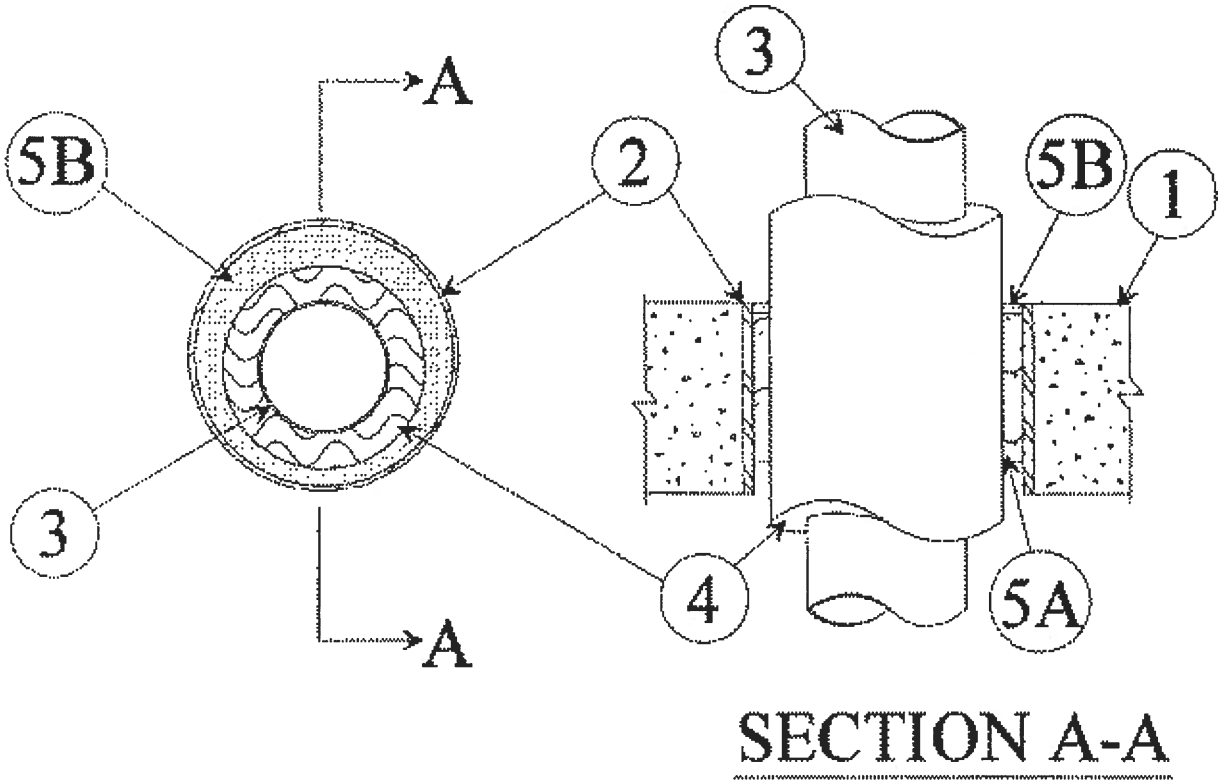

1. **Floor or Wall Assembly —** Min 4-1/2 in. thick reinforced lightweight or normal weight (100-150 pcf) concrete. Wall may also be constructed of any UL Classified **Concrete Blocks*.** Max diam of opening is 8 in.

See **Concrete Blocks** (CAZT) Category in the Fire Resistance Directory for names of manufacturers.

2. **Metallic Sleeve — (Optional) —** Nom 8 in. diam (or smaller) Schedule 10 (or heavier) steel pipe.

3. **Through Penetrants —** One metallic pipe or tubing to be centered within the firestop system. Pipe or tubing to be rigidly supported on both sides of floor or wall assembly. The following types and sizes of metallic pipes or tubing may be used:

A. **Steel Pipe —** Nom 4 in. diam (or smaller) Schedule 5 (or heavier) steel pipe.

B. **Copper Pipe —** Nom 4 in. diam (or smaller) Regular (or heavier) copper tubing.

C. **Copper Tubing —** Nom 4 in. diam (or smaller) Type L (or heavier) copper tubing.

4. **Tube Insulation — Plastics+ —** Nom 3/4 in., thick acrylonitrile butadiene/polyvinyl chloride (AB/PVC) flexible foam furnished in the form of tubing. A annular space shall be min 1/2 in. to max of 1-1/2 in.

See **Plastics+** (QMFZ2) Category in the Recognized Component Directory for names of manufacturers. Any Recognized Component tube insulation material meeting the above specifications and having a UL 94 Flammability Classification of 94-5VA may be used.

5. **Firestop System —** The firestop system shall consist of the following:

A. **Packing Material —** Min 4 in. thickness of min 4 pcf mineral wool batt insulation firmly packed into opening as a permanent form. Packing material to be recessed from top surface of floor or from both surfaces of wall as required to accommodate the required thickness of fill material.

B. **Fill, Void or Cavity Material* — Sealant —** Min 1/4 in. thickness of fill material applied within the annulus, flush with top surface of floor or with both surfaces of wall.

HILTI CONSTRUCTION CHEMICALS, DIV OF

HILTI INC — FS-One Sealant

*Bearing the UL Classification Mark

Last Updated on 1997-01-04

Questions? Notice of Disclaimer Page Top

Copyright © 2006 Underwriters Laboratories Inc.®

The appearance of a company's name or product in this database does not in itself assure that products so identified have been manufactured under UL's Follow-Up Service. Only those products bearing the UL Mark should be considered to be Listed and covered under UL's Follow-Up Service. Always look for the Mark on the product.

UL permits the reproduction of the material contained in the Online Certification Directory subject to the following conditions: 1. The Guide Information, Designs and/or Listings (files) must be presented in their entirety and in a non-misleading manner, without any manipulation of the data (or drawings). 2. The statement "Reprinted from the Online Certifications Directory with permission from Underwriters Laboratories Inc." must appear adjacent to the extracted material. In addition, the reprinted material must include a copyright notice in the following format: "Copyright © 2006 Underwriters Laboratories Inc.®"

An independent organization working for a safer world with integrity, precision and knowledge.

UL Online Certifications Directory

XHEZ.C-AJ-5091
Through-penetration Firestop Systems

Page Bottom

Through-penetration Firestop Systems

See General Information for Through-penetration Firestop Systems

System No. C-AJ-5091

February 08, 2006

F Rating — 2 Hr

T Rating — 1 Hr

L Rating At Ambient — 4 CFM/Sq Ft

L Rating At 400 F — Less Than 1 CFM/Sq Ft

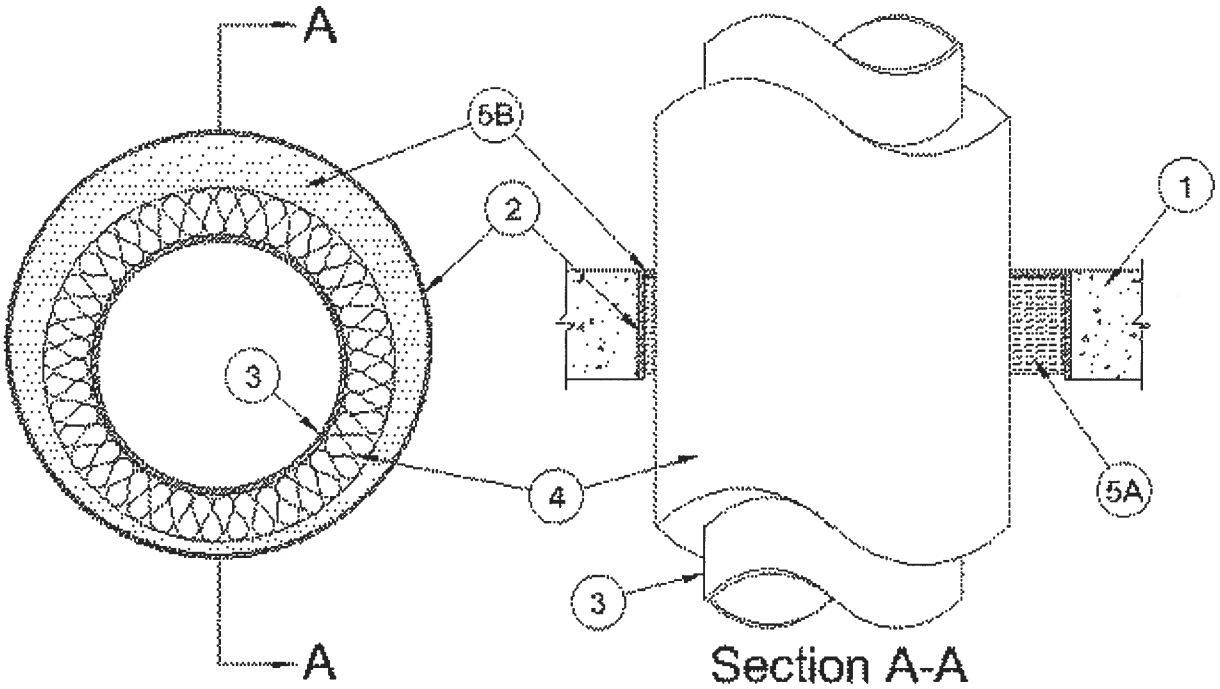

1. **Floor or Wall Assembly —** Min 4-1/2 in. thick reinforced lightweight or normal weight (100-150 pcf) concrete. Wall may also be constructed of any UL Classified **Concrete Blocks*.** Max diam of opening is 19-1/2 in.

See **Concrete Blocks** (CAZT) category in the Fire Resistance directory for names of manufacturers.

2. **Metallic Sleeve —** (Optional) — Nom 20 in. diam (or smaller) Schedule 10 (or heavier) steel pipe.

2A. **Sheet Metal Sleeve —** (Optional) - Max 6 in. diam, min 26 ga galv steel provided with a 26 ga galv steel square flange spot welded to the bottom of sleeve and sized to be a min of 2 in. larger than the sleeve diam. The sleeve is to be cast in place flush with bottom surface of floor and may extend a max of 1 in. above the top surface of the floor.

2B. **Sheet Metal Sleeve —** (Optional) - Max 12 in. diam, min 24 ga galv steel provided with a 24 ga galv steel square flange spot welded to the sleeve at bottom of sleeve and sized to be a min of 2 in. larger than the sleeve diam. The sleeve is to be cast in place flush with bottom surface of floor and may extend a max of 1 in. above the

top surface of the floor.

3. **Through Penetrants —** One metallic pipe or tubing to be installed either concentrically or eccentrically within the firestop system. Pipe or tubing to be rigidly supported on both sides of floor or wall assembly. The following types and sizes of metallic pipes or tubing may be used:

A. **Steel Pipe —** Nom 12 in. diam (or smaller) Schedule 10 (or heavier) steel pipe.

B. **Iron Pipe —** Nom 12 in. diam (or smaller) cast or ductile iron pipe.

C. **Copper Pipe —** Nom 6 in. diam (or smaller) Regular (or heavier) copper pipe.

D. **Copper Tubing —** Nom 6 in. diam (or smaller) Type L (or heavier) copper tubing.

4. **Pipe Covering —** Nom 2 in. thick hollow cylindrical heavy density (min 3.5 pcf) glass fiber units jacketed on the outside with an all-service jacket. Longitudinal joints sealed with metal fasteners or factory-applied, self-sealing lap tape. Transverse joints secured with metal fasteners or with butt tape supplied with the product. The annular space between the insulated pipe and the edge of the periphery of the opening shall be min 1/2 in. to a max 2-1/4 in.

See **Pipe Equipment Covering — Materials** — (BRGU) category in the Building Materials Directory for names of manufacturers. Any pipe covering material meeting the above specifications and bearing the UL Classification Marking with a Flame Spread Index of 25 or less and a Smoke Developed Index of 50 or less may be used.

4A. **Pipe Covering —** (Not Shown) — As an alternate to Item 4, max 2 in. thick cylindrical calcium silicate (min 14 pcf) units sized to the outside diam of the pipe or tube may be used. Pipe insulation secured with stainless steel bands or min 8 AWG stainless steel wire spaced max 12 in. OC. The annular space shall be min 1/2 in. to max 2-1/4 in.

5. **Firestop System —** The firestop system shall consist of the following:

A. **Packing Material —** Min 4 in. thickness of min 4 pcf mineral wool batt insulation firmly packed into opening as a permanent form. Packing material to be recessed from top surface of floor or from both surfaces of wall as required to accommodate the required thickness of fill material.

B. **Fill, Void or Cavity Material* — Sealant —** Min 1/2 in. thickness of fill material applied within the annulus, flush with top surface of floor or with both surfaces of wall.

HILTI CONSTRUCTION CHEMICALS, DIV OF

HILTI INC — FS-One Sealant

*Bearing the UL Classification Mark

Last Updated on 2006-02-08

Questions? Notice of Disclaimer Page Top

Copyright © 2006 Underwriters Laboratories Inc.®

The appearance of a company's name or product in this database does not in itself assure that products so identified have been manufactured under UL's Follow-Up Service. Only those products bearing the UL Mark should be considered to be Listed and covered under UL's Follow-Up Service. Always look for the Mark on the product.

UL permits the reproduction of the material contained in the Online Certification Directory subject to the following conditions: 1. The Guide Information, Designs and/or Listings (files) must be presented in their entirety and in a non-misleading manner, without any manipulation of the data (or drawings). 2. The statement "Reprinted from the Online Certifications Directory with permission from Underwriters Laboratories Inc." must appear adjacent to the extracted material. In addition, the reprinted material must include a copyright notice in the following format: "Copyright © 2006 Underwriters Laboratories Inc.®"

An independent organization working for a safer world with integrity, precision and knowledge.

UL Online Certifications Directory

XHEZ.C-AJ-7051
Through-penetration Firestop Systems

Page Bottom

Through-penetration Firestop Systems

See General Information for Through-penetration Firestop Systems

System No. C-AJ-7051

October 20, 2000

F Rating — 3 Hr

T Rating — 1 Hr

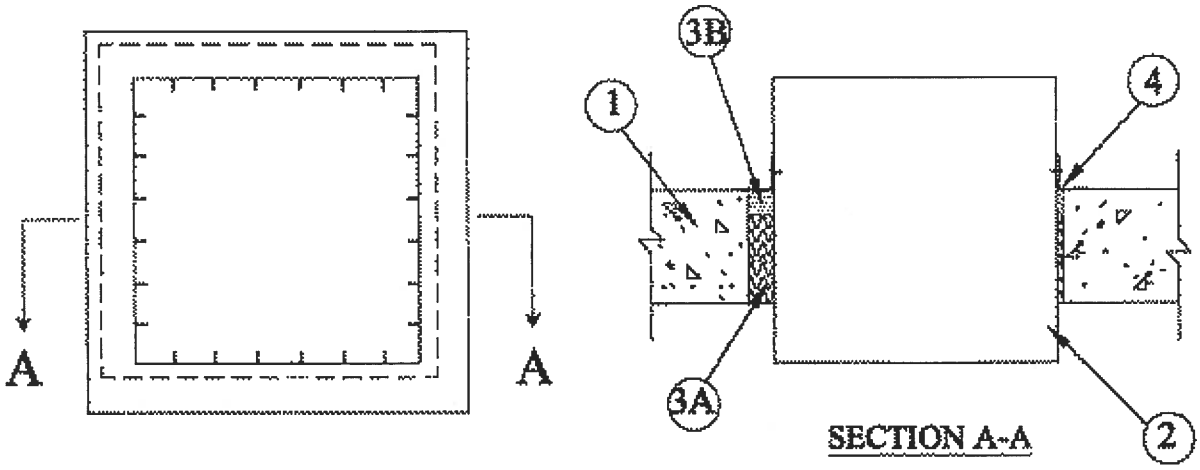

1. **Floor or Wall Assembly —** Min 4-1/2 in. thick reinforced lightweight or normal weight (100-150 pcf) concrete floor or min 5-1/2 in. thick lightweight on normal weight concrete wall. Wall may also be constructed of any UL Classified **Concrete Blocks*.** Max area of opening is 1024 in. sq with a max dimension of 32 in.

See **Concrete Blocks** (CAZT) category in the Fire Resistance Directory for names of manufacturers.

2. **Steel Duct —** Nom 30 by 30 by No. 24 gauge (or heavier) galv steel duct. One steel duct to be positioned within the firestop system. The annular space shall be min 1/4 in. to max 1-3/4 in. Duct to be rigidly supported on both sides of floor or wall assembly.

3. **Firestop System —** The firestop system shall consist of the following:

A. **Packing Materials —** Min 3-1/2 in. thickness of min 4 pcf mineral wool batt insulation firmly packed into opening as a permanent form between the bare steel duct and the periphery of the opening. Packing material to be recessed from top surface of floor or both surfaces of wall as required to accommodate the required thickness of fill material.

B. **Fill, Void or Cavity Material* — Sealant —** Min 1 in. thickness of fill material applied within the annulus, flush with top surface of floor or with both surfaces of wall.

HILTI CONSTRUCTION CHEMICALS, DIV OF

HILTI INC — CP 606 Flexible Firestop Sealant or FS-ONE Sealant

4. **Steel Retaining Angle —** Nom 2 in. by 2 in. by No. 16 gauge (or heavier) steel angles attached to all four sides of the steel duct on the top surface or both surfaces of the wall. The angles shall be attached with No. 8 (or larger) steel sheet metal screws spaced max of 1 in. from each end and a max of 3 in. OC.

*Bearing the UL Classification Mark

Last Updated on 2000-10-20

Questions? Notice of Disclaimer Page Top

Copyright © 2006 Underwriters Laboratories Inc.®

The appearance of a company's name or product in this database does not in itself assure that products so identified have been manufactured under UL's Follow-Up Service. Only those products bearing the UL Mark should be considered to be Listed and covered under UL's Follow-Up Service. Always look for the Mark on the product.

UL permits the reproduction of the material contained in the Online Certification Directory subject to the following conditions: 1. The Guide Information, Designs and/or Listings (files) must be presented in their entirety and in a non-misleading manner, without any manipulation of the data (or drawings). 2. The statement "Reprinted from the Online Certifications Directory with permission from Underwriters Laboratories Inc." must appear adjacent to the extracted material. In addition, the reprinted material must include a copyright notice in the following format: "Copyright © 2006 Underwriters Laboratories Inc.®"

An independent organization working for a safer world with integrity, precision and knowledge.

UL Online Certifications Directory

XHEZ.C-AJ-7084
Through-penetration Firestop Systems

Page Bottom

Through-penetration Firestop Systems

See General Information for Through-penetration Firestop Systems

System No. C-AJ-7084

July 08, 2003

F Rating — 2 Hr

T Rating — 0 Hr

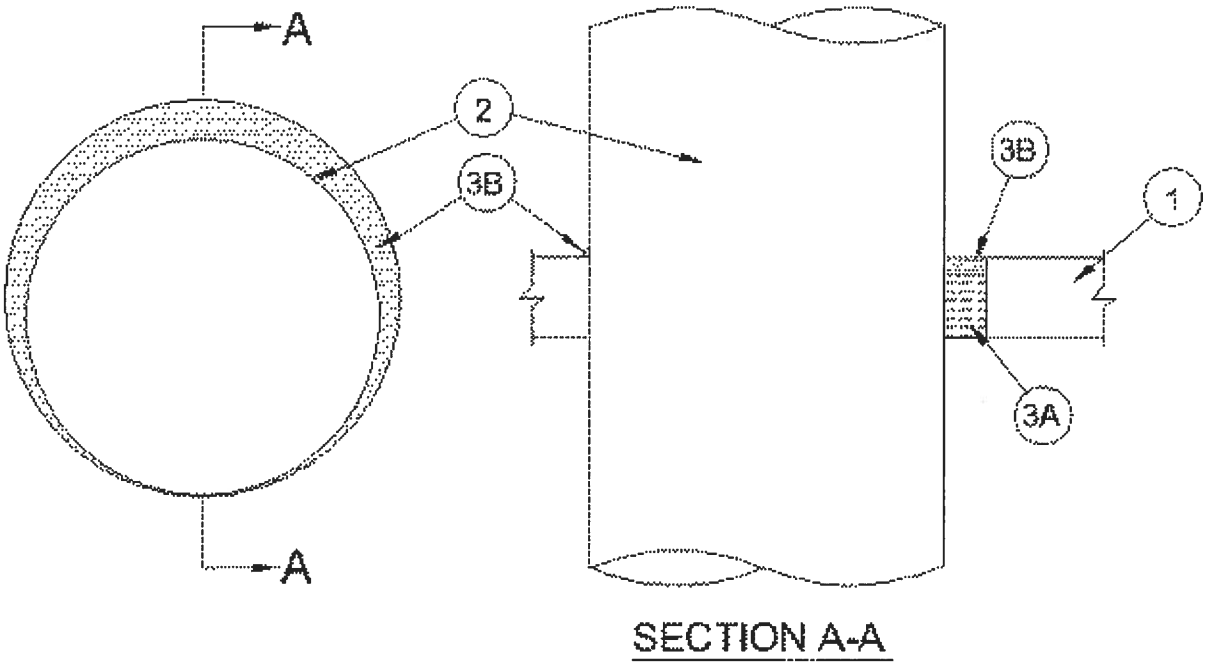

1. **Floor or Wall Assembly —** Min 4-1/2 in. thick reinforced lightweight or normal weight (100-150 pcf) concrete. Wall may also be constructed of any UL Classified **Concrete Blocks***. Max diam of opening is 21-3/4 in.

See **Concrete Blocks** (CAZT) category in the Fire Resistance Directory for names of manufacturers.

2. **Through Penetrant —** Galv steel duct to be installed concentrically or eccentrically within the firestop system. The annular space between the duct and periphery of opening shall be 0 in. (point contact) and max 1-1/2 in. Duct to be rigidly supported on both sides of wall assembly.

A. **Spiral Wound HVAC Duct —** Nom 20 in. diam (or smaller) No. 24 MSG (or heavier) galv steel spiral wound duct.

B. **Sheet Metal Duct —** Nom 12 in. diam (or smaller) No. 28 MSG (or heavier) galv sheet steel duct.

3. **Firestop System —** The firestop system shall consist of the following:

A. **Packing Material —** Min 3-1/2 in. thickness of min 4.0 pcf mineral wool batt insulation firmly packed into opening as a permanent form. Packing material to be recessed from top surface of floor or both surfaces of wall to accommodate the required thickness of fill

material.

B. **Fill, Void or Cavity Material*—Sealant —** Min 1 in. thickness of fill material applied within annulus, flush with top surface of floor or both surfaces of wall assembly. At the point contact location between duct and periphery of opening, a min 1/2 in. diam bead of sealant shall be applied at the concrete/duct interface.

HILTI CONSTRUCTION CHEMICALS, DIV OF

HILTI INC — FS-ONE Sealant, CP601S Elastomeric Firestop Sealant, CP606 Flexible Firestop Sealant or CP 604 Self-Leveling Firestop Sealant.

(Note: CP 604 Self-Leveling Firestop Sealant to be used on floor assemblies only.)

*Bearing the UL Classification Mark

Last Updated on 2003-07-08

Questions? Notice of Disclaimer Page Top

Copyright © 2006 Underwriters Laboratories Inc.®

The appearance of a company's name or product in this database does not in itself assure that products so identified have been manufactured under UL's Follow-Up Service. Only those products bearing the UL Mark should be considered to be Listed and covered under UL's Follow-Up Service. Always look for the Mark on the product.

UL permits the reproduction of the material contained in the Online Certification Directory subject to the following conditions: 1. The Guide Information, Designs and/or Listings (files) must be presented in their entirety and in a non-misleading manner, without any manipulation of the data (or drawings). 2. The statement "Reprinted from the Online Certifications Directory with permission from Underwriters Laboratories Inc." must appear adjacent to the extracted material. In addition, the reprinted material must include a copyright notice in the following format: "Copyright © 2006 Underwriters Laboratories Inc.®"

An independent organization working for a safer world with integrity, precision and knowledge.

UL Online Certifications Directory

XHEZ.C-AJ-8099
Through-penetration Firestop Systems

Page Bottom

Through-penetration Firestop Systems

See General Information for Through-penetration Firestop Systems

System No. C-AJ-8099

November 11, 2002

F Rating — 3 Hr

T Ratings — 0 and 3/4 Hr (See Item 2)

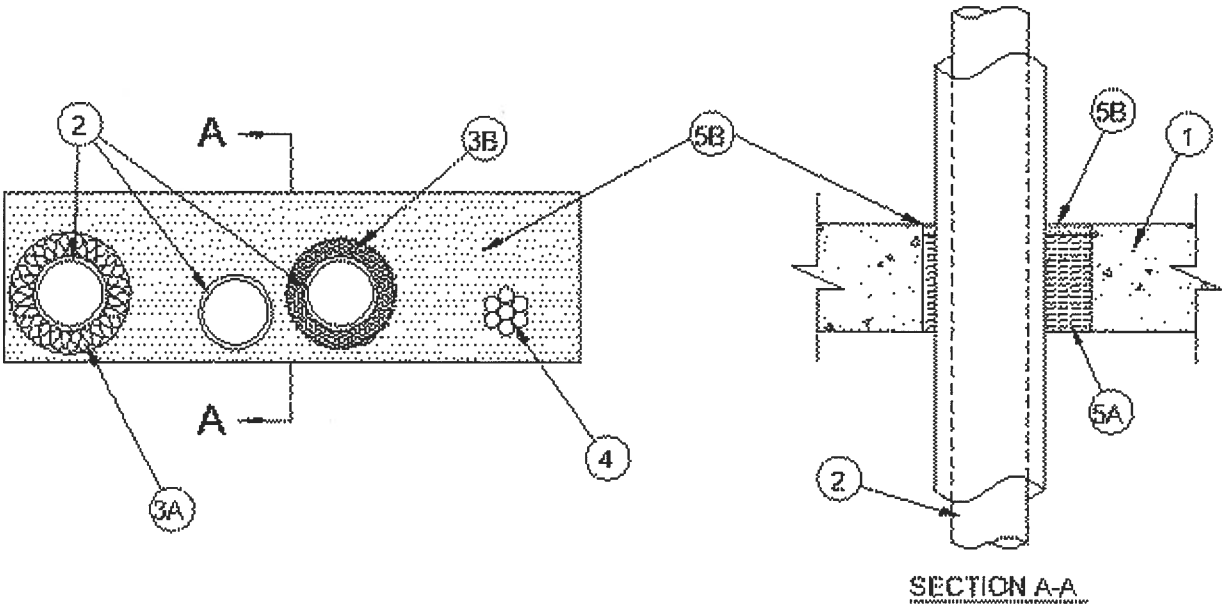

1. **Floor or Wall Assembly —** Min 4-1/2 in. thick reinforced lightweight or normal weight (100-150 pcf) concrete floor or min 5 in. reinforced lightweight or normal weight concrete wall. Wall may also be constructed of any UL Classified **Concrete Blocks***. Max area of square, rectangular or circular opening is 192 sq in. with max dimension of 24 in.

See **Concrete Blocks** (CAZT) category in the Fire Resistance Directory for names of manufacturers.

2. **Through-Penetrant —** One or more pipes or tubes to be installed within the opening. The total number of through-penetrants is dependent on the size of the opening and types and sizes of the penetrants. Any combination of the penetrants described below may be used provided that the following parameters relative to the annular spaces and the spacings between the pipes are maintained. The seperation between cable bundle, tubes and insulated tubes shall be a min 1/2 in. to max 3-1/8 in. The annular space between penetrants and the periphery of opening shall be a min 1/2 in. to max 5 in. Pipes or tubes to be rigidly supported on both sides of floor or wall assembly. The following types and sizes of metallic pipes or tubes may be used.

A. **Copper Tubing —** Nom 3 in. diam (or smaller) Tyle L (or heavier) copper tube.

B. **Copper Pipe —** Nom 3 in. diam (or smaller) Regular (or heavier) copper pipe.

C. **Steel Pipe —** Nom 3 in. diam (or smaller) Schedule 10 (or heavier) steel pipe.

D. **Iron Pipe —** Nom 3 in. diam (or smaller) cast or ductile iron pipe.

E. **Conduit —** Nom 3 in. diam (or smaller) electric metallic tubing (EMT) or steel conduit.

F. **Flexible Steel Conduit + —** Nom 1 in. diameter (or smaller) flexible steel conduit.

See **Flexible Metal Conduit** (DXUZ) category in the Electrical Construction Material Directory for names of manufacturers.

The hourly T Rating is 3/4 hr when a pipe or tube with fiber-glass insulation is used, or 0 hr when a pipe or tube, a pipe or tube with AB/PVC insulation or a cable bundle is used.

3. **Pipe Insulation —** (Optional)—The following types of pipe insulation may be used:

A. **Pipe Covering* —** Nom 1 in. thick (or thinener) hollow cylindrical heavy density (min 3.5 pcf) glass fiber units jacketed on the outside with an all service jacket. Longitudinal joints sealed with metal fasteners or factory-applied self-sealing lap tape. Transverse joints secured with metal fasteners or with butt tape supplied with the product.

See **Pipe and Equipment Covering - Materials** (BRGU) category in the Building Materials Directory for names of manufacturers. Any pipe covering material meeting the above specifications and bearing the UL Classifica tion Marking with a Flame Spread Index of 25 or less and a Smoke Developed Index of 50 or less may be used.

B. **Tube Insulation-Plastics+++ —** Nom 3/4 in. thick (or thinner) acrylonitrile butadiene/polyvinyl chloride (AB/PVC) flexible foam furnished in the foarm of tubing.

See **Plastics+++** (QMFZ2) category in the Plastics Recognized Component Directory for names of manufacturers. Any Recognized Component tube insulation material meeting the above specifications and having a UL 94 Flammability Classification of 94-5VA may be used.

4. **Cables —** Max 2 in. diam tight bundle of cables installed within the opening and rigidly supported on both sides of floor or wall assembly. The space between the cables and periphery of the opening shall range from min 2 in. to max 4 in. Any combination of the following types and sizes of metallic conductor of fiber optic cable may be used:

A. Max 500 kcmil single copper connector power cable with thermoplastic insulation and polyvinyl chloride (PVC) jacket.

B. Max 300 pair No. 24 AWG copper conductor telecommunication cables with PVC insulation and jacket material.

C. Max 7/C copper conductor No. 12 AWG multiconductor power and control cables with PVC or cross-linked polyethylene (XLPE) insulation and PVC jacket.

D. Multiple fiber optical communication cables jacketed with PVC and having a max outside diam of 1/2 in.

E. Max 3/C copper conductor No. 12 AWG with bare aluminum ground, PVC insulated steel **Metal-Clad** cable.

5. **Firestop System —** The firestop system shall consist of the following:

A. **Packing Material —** Min 4 in. thickness of min 4 pcf mineral wool batt insulation firmly packed into opening as a permanent form. Packing material to be recessed from top surface of floor or both surfaces of wall to accommodate the required thickenss of fill material.

B. **Fill Void or Cavity Materials* - Sealant —** Min 1/2 in. thickness of fill material applied within the annulus, flush with top surface of floor or with both surfaces of wall.

HILTI CONSTRUCTION CHEMICALS, DIV OF

HILTI INC — FS-ONE Sealant

+++Bearing the UL Recognized Component Marking

*Bearing the UL Classification Mark

+Bearing the UL Listing Mark

Last Updated on 2002-11-11

Questions? Notice of Disclaimer Page Top

Copyright © 2006 Underwriters Laboratories Inc.®

The appearance of a company's name or product in this database does not in itself assure that products so identified have been manufactured under UL's Follow-Up Service. Only those products bearing the UL Mark should be considered to be Listed and covered under UL's Follow-Up Service. Always look for the Mark on the product.

UL permits the reproduction of the material contained in the Online Certification Directory subject to the following conditions: 1. The Guide

Information, Designs and/or Listings (files) must be presented in their entirety and in a non-misleading manner, without any manipulation of the data (or drawings). 2. The statement "Reprinted from the Online Certifications Directory with permission from Underwriters Laboratories Inc." must appear adjacent to the extracted material. In addition, the reprinted material must include a copyright notice in the following format: "Copyright © 2006 Underwriters Laboratories Inc.®"

An independent organization working for a safer world with integrity, precision and knowledge.

UL Online Certifications Directory

XHEZ.C-AJ-8143
Through-penetration Firestop Systems

Page Bottom

Through-penetration Firestop Systems

See General Information for Through-penetration Firestop Systems

System No. C-AJ-8143

April 26, 2004

F Rating — 2 Hr

T Rating — 0 Hr

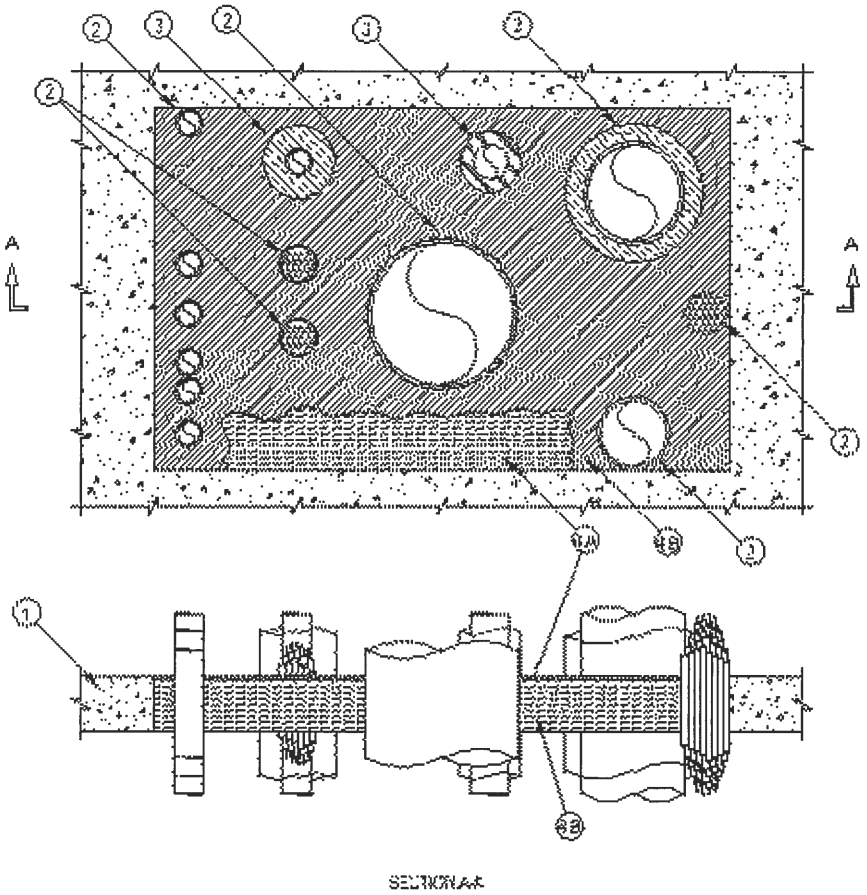

1. **Floor or Wall Assembly —** Min 4-1/2 in. (114 mm) thick reinforced lightweight or normal weight (100-150 pcf or 1600-2400 kg/m^3) concrete floor. Min 5 in. (127 mm) thick reinforced lightweight or normal weight (100-150 pcf or 1600-2400 kg/m^3) concrete wall. Wall may also be constructed of any UL Classified **Concrete Blocks***. Max size of opening is 1440 in.2 (9,290 cm^2) with a max dimension of 48 in. (1219 mm).

   See **Concrete Blocks** (CAZT) category in the Fire Resistance Directory for names of manufacturers.

2. **Through-Penetrant —** One or more pipes, tubes or cable bundles to be installed within the opening. The total

number of through-penetrants is dependent on the size of the opening and types and sizes of the penetrants. Any combination of the penetrants described below may be used provided that the following parameters relative to the annular spaces are maintained. The annular space between individual cables and cable bundles shall be a min 1/2 in. (13 mm). The annular space between individual cables and cable bundles and other penetrants shall be a min 1/2 in. (13 mm) except that a min 2 in. (51 mm) shall be maintained between the cables and copper pipes and tubes greater than a nom 3 in. (76 mm) diam and steel and iron pipes and conduits greater than a nom 4 in. (102 mm) diam. The annular space between metallic pipes, conduit and tubes and insulated pipes and tubes shall be a min 2 in. (51 mm). The annular space between nom 3 in (76mm) diam (and smaller) copper pipes and tubes and between nom 4 in (102mm) diam (and smaller) steel and iron pipes and conduits shall be a min. 1/2" (13 mm). The annular space between nom 2 in. (51 mm) diam (and smaller) metallic pipes and conduits shall be a min 0 in. (0 mm). The annular space between insulated penetrants and the periphery of opening shall be a min 1/2 in. (13 mm). The annular space between all other penetrants and the periphery of opening shall be a min 0 in. (0 mm) (point contact). A max annular space in the system shall be 12 in. (305 mm). Penetrants to be rigidly supported on both sides of floor or wall assembly. The following types and sizes of penetrants may be used.

A. The following types of metallic pipes, tubes or conduits may be used:

1. **Copper Tubing —** Nom 6 in. (152 mm) diam (or smaller) Type L (or heavier) copper tube.

2. **Copper Pipe —** Nom 6 in. (152 mm) diam (or smaller) Regular (or heavier) copper pipe.

3. **Steel Pipe —** Nom 24 in. (610 mm) diam (or smaller) Schedule 40 (or heavier) steel pipe.

4. **Iron Pipe —** Nom 24 in. (610 mm) diam (or smaller) cast or ductile iron pipe.

5. **Conduit —** Nom 4 in. (102 mm) diam (or smaller) electric metallic tubing (EMT) or nom 6 in. (152 mm) diam (or smaller) rigid steel conduit.

B. **Cables Bundles —** Max 4 in. (102 mm) diam tightly bundled cables. Any combination of the following types and sizes of cables may be used:

1. Max 500 kcmil single copper or aluminum conductor power cable with thermoplastic insulation and polyvinyl chloride (PVC) jacket.

2. Max 300 pair No. 24 AWG copper conductor telecommunication cables with PVC insulation and jacket material.

3. Max 7/C copper conductor No. 12 AWG multi-conductor power and control cables with PVC or cross-linked polyethylene (XLPE) insulation and PVC jacket.

4. Multiple fiber optical communication cables jacketed with PVC and having a max outside diam of 1/2 in.

5. Max 3/C No. 12 AWG steel clad cable with copper conductors and PVC insulation material.

C. **Individual Cables —** Any of the following types and sizes of individual (non-bundled) cables may be used:

1. Max 3/C No. 2/0 AWG (or smaller) copper conductor PVC jacketed aluminum clad or steel clad TECK 90 cable.

2. **Through Penetrating Product* —** Any cables, **Armored Cable+** or **Metal Clad Cable+** currently Classified under the **Through Penetrating Product** category.

See **Through Penetrating Product** (XHLY) category in the Fire Resistance Directory for names of manufacturers.

3. Max 500 kcmil single copper or aluminum conductor power cable with thermoplastic insulation and polyvinyl chloride (PVC) jacket.

4. Max 300 pair No. 24 AWG copper conductor telecommunication cables with PVC insulation and jacket material.

5. Max 7/C copper conductor No. 12 AWG multi-conductor power and control cables with PVC or cross-linked polyethylene (XLPE) insulation and PVC jacket.

6. Multiple fiber optical communication cables jacketed with PVC and having a max outside diam of 1/2 in.

7. Max 3/C No. 12 AWG steel clad cable with copper conductors and PVC insulation material.

8. Max 4C/750 kcmil (or smaller) aluminum or copper conductor metal clad cable with aluminum or steel armor, with or without PVC

jacket.

3. **Pipe Insulation —** (Optional) - Pipes and tubes of the sizes noted below may be provided with one of the following types of pipe insulations::

A. **Pipe Covering* —** Nom 1-1/2 in. (38 mm) thick (or thinner) hollow cylindrical heavy density glass fiber units jacketed on the outside with an all service jacket for pipes with a nom diam of 8 in. (203 mm) (or smaller) or tubes with a nom diam of 4 in. (102 mm) (or smaller). Longitudinal joints sealed with metal fasteners or factory-applied self-sealing lap tape. Transverse joints secured with metal fasteners or with butt tape supplied with the product.

See **Pipe and Equipment Covering - Materials** (BRGU) category in the Building Materials Directory for names of manufacturers. Any pipe covering material meeting the above specifications and bearing the UL Classification Marking with a Flame Spread Index of 25 or less and a Smoke Developed Index of 50 or less may be used.

B. **Pipe Covering* —** Nom 2 in. (51 mm) thick (or thinner) hollow cylindrical heavy density glass fiber units jacketed on the outside with an all service jacket for pipes or tubes with a nom diam of 2 in. (51 mm) (or smaller). Longitudinal joints sealed with metal fasteners or factory-applied self-sealing lap tape. Transverse joints secured with metal fasteners or with butt tape supplied with the product.

See **Pipe and Equipment Covering - Materials** (BRGU) category in the Building Materials Directory for names of manufacturers. Any pipe covering material meeting the above specifications and bearing the UL Classification Marking with a Flame Spread Index of 25 or less and a Smoke Developed Index of 50 or less may be used.

C. **Tube Insulation-Plastics+ —** Nom 1 in. (25 mm) thick (or thinner) acrylonitrile butadiene/polyvinyl chloride (AB/PVC) flexible foam furnished in the form of tubing for pipes or tubes with a nom diam of 2 in. (51 mm) (or smaller).

See **Plastics** (QMFZ2) category in the Plastics Recognized Component Directory for names of manufacturers. Any Recognized Component tube insulation material meeting the above specifications and having a UL 94 Flammability Classification of 94-5VA may be used.

4. **Firestop System —** The firestop system shall consist of the following:

A. **Packing Material —** Min 4 in. (102 mm) thickness of 4 pcf (64 kg/m^3) mineral wool batt insulation tightly packed into the opening as a permanent form. Packing material to be recessed from top surface of floor or both surfaces of wall to accommodate the required thickness of fill material.

B. **Fill, Void or Cavity Material - Sealant* —** Min 1/2 in. (13 mm) thickness of fill material applied within the annulus flush with the top surface of the floor or both surfaces of the wall.

HILTI CONSTRUCTION CHEMICALS, DIV OF

HILTI INC — FS-ONE Sealant

*Bearing the UL Classification Mark

Last Updated on 2004-04-26

Questions? Notice of Disclaimer Page Top

Copyright © 2006 Underwriters Laboratories Inc.®

The appearance of a company's name or product in this database does not in itself assure that products so identified have been manufactured under UL's Follow-Up Service. Only those products bearing the UL Mark should be considered to be Listed and covered under UL's Follow-Up Service. Always look for the Mark on the product.

UL permits the reproduction of the material contained in the Online Certification Directory subject to the following conditions: 1. The Guide Information, Designs and/or Listings (files) must be presented in their entirety and in a non-misleading manner, without any manipulation of the data (or drawings). 2. The statement "Reprinted from the Online Certifications Directory with permission from Underwriters Laboratories Inc." must appear adjacent to the extracted material. In addition, the reprinted material must include a copyright notice in the following format: "Copyright © 2006 Underwriters Laboratories Inc.®"

An independent organization working for a safer world with integrity, precision and knowledge.

UL Online Certifications Directory

XHEZ.F-A-1028
Through-penetration Firestop Systems

Page Bottom

Through-penetration Firestop Systems

See General Information for Through-penetration Firestop Systems

System No. F-A-1028

August 26, 2005

F Rating — 2 Hr

T Rating — 0 Hr

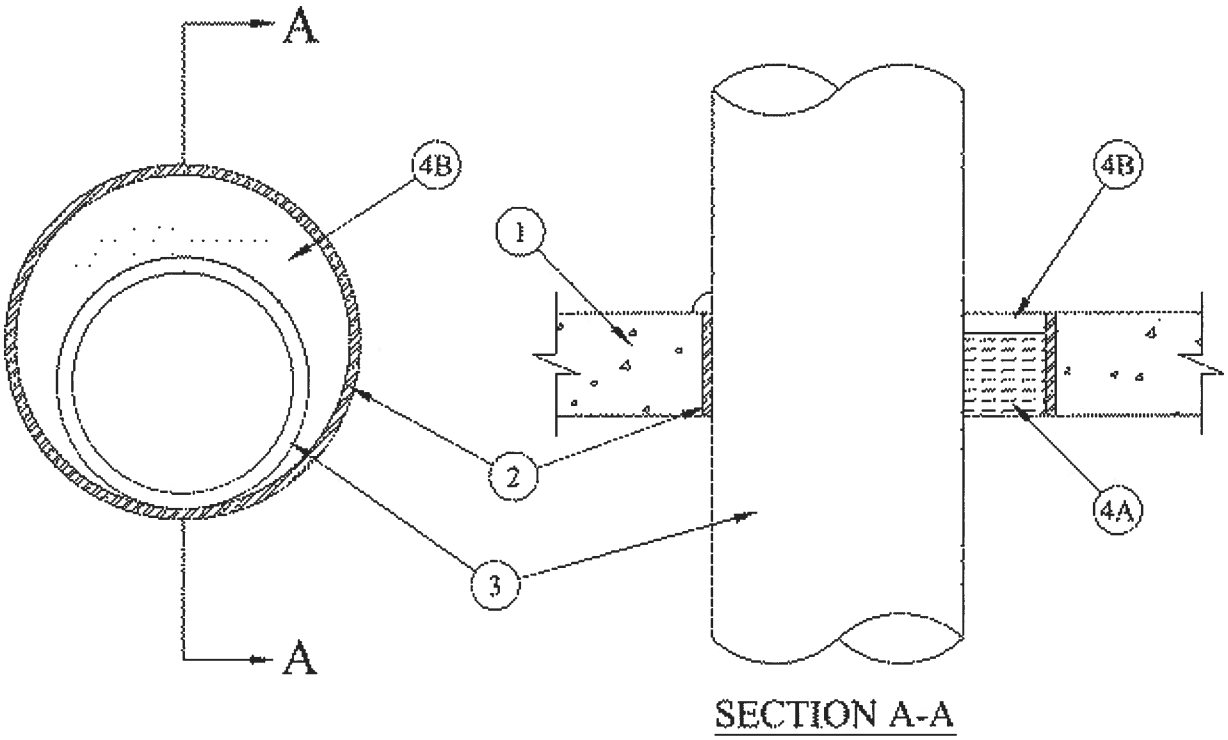

1. **Floor Assembly —** Min 2-1/2 in. thick reinforced lightweight or normal weight (100-150 pcf) concrete. Max diameter of opening is 31-7/8 in.

1A. **Floor Assembly —** (Optional)-(Not Shown)-The fire rated unprotected concrete and steel floor assembly shall be constructed of the materials and in the manner specified in the individual D900 Series designs in the UL Fire Resistance Directory and as summarized below.

A. **Concrete —** Min 2-1/2 in thick reinforced lightweight or normal weight (100-150 pcf) concrete.

B. **Steel Floor and Form Units* —** Composite or non-composite max 3 in. deep galv steel fluted units as specified in the individual Floor-Ceiling Design. Max diam of opening is 31-7/8 in.

2. **Steel Sleeve —** (Optional)- Nom 32 in. diam (or smaller) Schedule 40 steel pipe cast or grouted into floor assembly, flush with floor surfaces.

2A. **Sheet Metal Sleeve —** (Optional) - Max 6 in. diam, min 26 ga galv steel provided with a 26 ga galv steel square flange spot welded to the sleeve at approx mid-height and sized to be a min of 2 in. larger than the sleeve

diam. The sleeve is to be cast in place and may extend a max of 4 in. below the bottom of the deck and a max of 1 in. above the top surface of the concrete floor.

2B. **Sheet Metal Sleeve —** (Optional) - Max 12 in. diam, min 24 ga galv steel provided with a 24 ga galv steel square flange spot welded to the sleeve at approx mid-height and sized to be a min of 2 in. larger than the sleeve diam. The sleeve is to be cast in place may extend a max of 4 in. below the bottom of the deck and a max of 1 in. above the top surface of the concrete floor.

3. **Through Penetrants —** One metallic pipe, conduit or tubing to be installed concentrically within the firestop device. Pipe, conduit or tubing to be rigidly supported on both sides of floor assembly. The annular space between pipe conduit or tubing and the periphery of the opening shall be min 0 in. (point contact) to max 1-7/8 in. The following types of pipe, conduit or tubing may be used.

Steel Pipe — Nom 30 in. diam (or smaller) Schedule 10 (or heavier) steel pipe.

Iron Pipe — Nom 30 in. diam (or smaller) cast or ductile iron pipe.

Conduit — Nom 6 in. diam (or smaller) rigid steel conduit.

Conduit — Nom 4 in. diam (or smaller) steel electrical metallic conduit.

Copper Tubing — Nom 6 in. diam (or smaller) Type L (or heavier) copper tubing.

Copper Pipe — Nom 6 in. diam (or smaller) Regular (or heavier) copper pipe.

4. **Firestop System —** The firestop system shall consist of the following:

A. **Packing Material —** Min 2 in thickness of min 4 pcf mineral wool batt insulation tightly packed into the opening as a permanent form. Packing material to be recessed from top surface of floor as required to accommodate the required thickness of fill material.

B. **Fill, Void or Cavity Materials* - Sealant —** Min 1/2 in. thickness of fill material applied within the annulus, flush with top surface of floor. At point contact, a min 1/2 in. diam bead of fill material shall be applied at the concrete/sleeve/pipe interface on top surface of floor.

HILTI CONSTRUCTION CHEMICALS, DIV OF

HILTI INC — FS-ONE Sealant

*Bearing the UL Classification Mark

Last Updated on 2005-08-26

Questions? Notice of Disclaimer Page Top

Copyright © 2006 Underwriters Laboratories Inc.®

The appearance of a company's name or product in this database does not in itself assure that products so identified have been manufactured under UL's Follow-Up Service. Only those products bearing the UL Mark should be considered to be Listed and covered under UL's Follow-Up Service. Always look for the Mark on the product.

UL permits the reproduction of the material contained in the Online Certification Directory subject to the following conditions: 1. The Guide Information, Designs and/or Listings (files) must be presented in their entirety and in a non-misleading manner, without any manipulation of the data (or drawings). 2. The statement "Reprinted from the Online Certifications Directory with permission from Underwriters Laboratories Inc." must appear adjacent to the extracted material. In addition, the reprinted material must include a copyright notice in the following format: "Copyright © 2006 Underwriters Laboratories Inc.®"

An independent organization working for a safer world with integrity, precision and knowledge.

UL Online Certifications Directory

XHEZ.F-A-1029
Through-penetration Firestop Systems

Page Bottom

Through-penetration Firestop Systems

See General Information for Through-penetration Firestop Systems

System No. F-A-1029

December 04, 2001

F Rating — 2 Hr

T Rating — 0 Hr

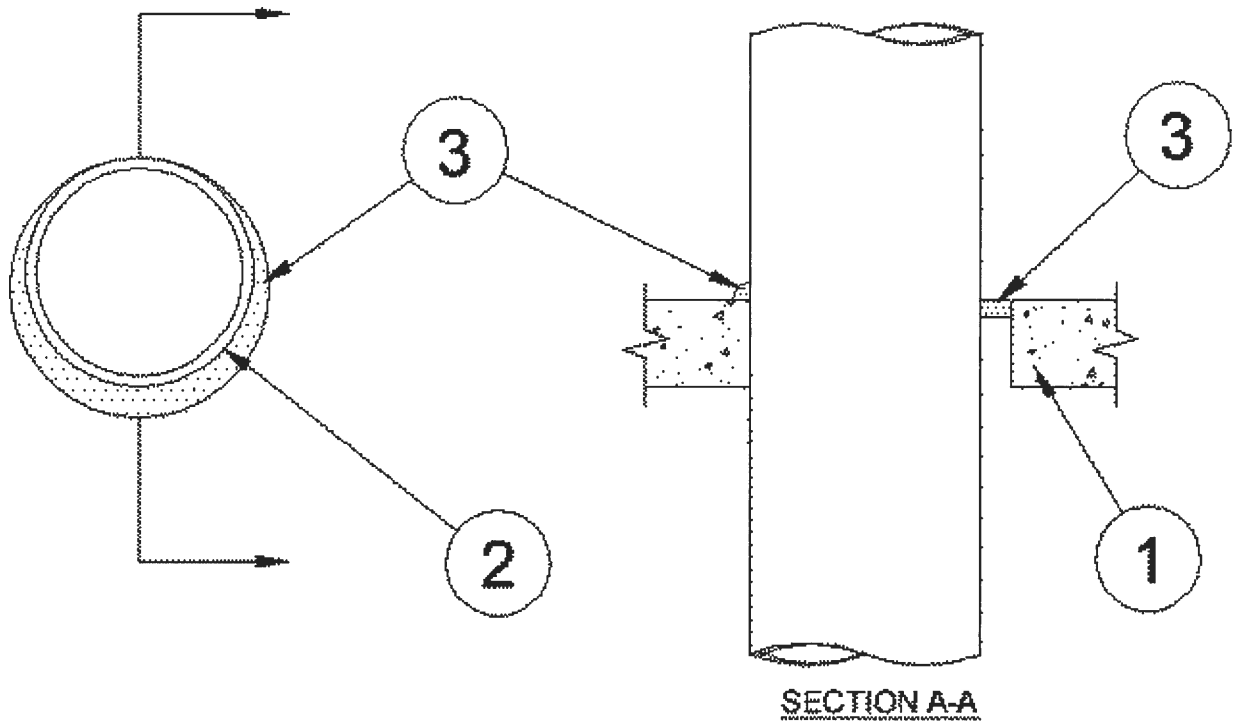

1. **Floor Assembly —** Min 2-1/2 in. thick reinforced lightweight or normal weight (100-150 pcf) concrete. Max diam of opening is 30-7/8 in.

1A. **Floor Assembly —** (Optional — Not Shown) — The fire rated unprotected concrete and steel floor assembly shall be constructed of the materials and in the manner specified in the individual D900 Series designs in the UL Fire Resistance Directory and as summariezed below:

A. **Concrete —** Min 2-1/2 in. thick reinforced lightweight on normal weight (100-150 pcf) concrete.

B. **Steel Floor and Form Units* —** Composite or non-composite max 3 in. deep galv steel fluted units as specified in the individual Floor-Ceiling Design.

2. **Through-Penetrant —** One metallic pipe, conduit or tubing to be installed either concentrically or eccentrically within the firestop system. Pipe, conduit or tubing to be rigidly supported on both sides of floor assembly. The annular space between pipe, conduit or tubing and the periphery of the opening shall be min 0 in. (point contact) to max 7/8 in. The following types of pipe, conduit or tubing may be used:

Steel Pipe — Nom 30 in. diam (or smaller) Schedule 10 (or heavier) steel pipe.

Iron Pipe — Nom 30 in. diam (or smaller) cast or ductile iron pipe.

Conduit — Nom 6 in. diam (or smaller) rigid steel conduit.

Conduit — Nom 4 in. diam (or smaller) steel electrical metallic tubing (EMT).

Copper Tubing — Nom 6 in. diam (or smaller) Type L (or heavier) copper tubing.

Copper Pipe — Nom 6 in. diam (or smaller) Regular (or heavier) copper pipe.

3. **Fill, Void or Cavity Material* — Sealant —** Min 1/2 in. thickness of fill material applied within the annulus, flush with top surface of floor. At point contact, a min 1/4 in. diam bead of fill material shall be applied at the concrete/pipe interface on the top surface of floor.

HILTI CONSTRUCTION CHEMICALS, DIV OF

HILTI INC — FS-ONE Sealant

*Bearing the UL Classification Mark

Last Updated on 2001-12-04

Questions? Notice of Disclaimer Page Top

Copyright © 2006 Underwriters Laboratories Inc.®

The appearance of a company's name or product in this database does not in itself assure that products so identified have been manufactured under UL's Follow-Up Service. Only those products bearing the UL Mark should be considered to be Listed and covered under UL's Follow-Up Service. Always look for the Mark on the product.

UL permits the reproduction of the material contained in the Online Certification Directory subject to the following conditions: 1. The Guide Information, Designs and/or Listings (files) must be presented in their entirety and in a non-misleading manner, without any manipulation of the data (or drawings). 2. The statement "Reprinted from the Online Certifications Directory with permission from Underwriters Laboratories Inc." must appear adjacent to the extracted material. In addition, the reprinted material must include a copyright notice in the following format: "Copyright © 2006 Underwriters Laboratories Inc.®"

An independent organization working for a safer world with integrity, precision and knowledge.

UL Online Certifications Directory

XHEZ.F-A-3012
Through-penetration Firestop Systems

Page Bottom

Through-penetration Firestop Systems

See General Information for Through-penetration Firestop Systems

System No. F-A-3012

November 07, 2001

F Rating — 3 Hr

T Ratings — 0, 1/2 and 3/4 Hr (See Item 3)

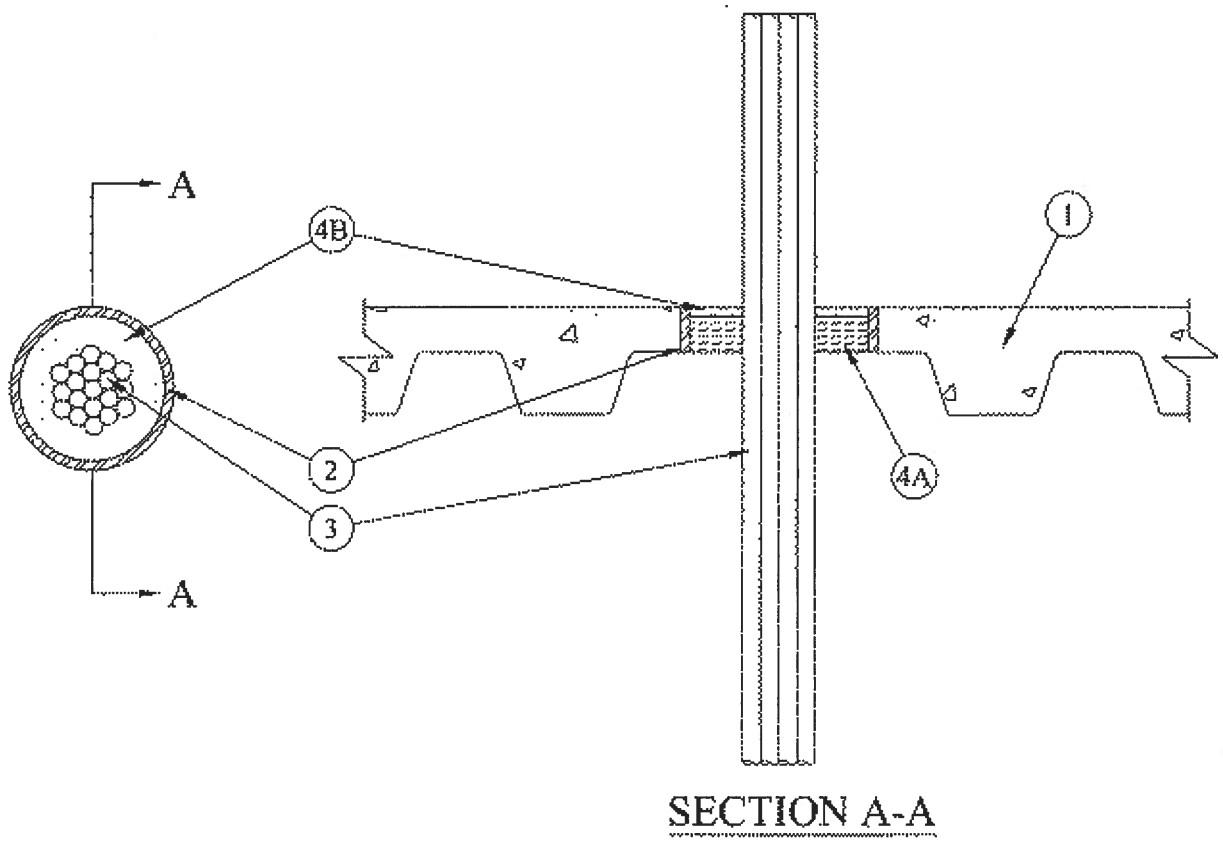

1. **Floor Assembly —** The fire rated unprotected concrete and steel floor assembly shall be constructed of the materials and in the manner specified in the individual D900 Series designs in the UL Fire Resistance Directory and as summarized below.

A. **Concrete —** Min 2-1/2 in thick reinforced lightweight or normal weight (100-150 pcf) concrete.

B. **Steel Floor and Form Units* —** Composite or non-composite max 3 in. deep galv steel fluted units as specified in the individual Floor-Ceiling Design. Max diam of opening is 6 in.

2. **Steel Sleeve —** (Optional)- Nom 6 in. diam (or smaller) Schedule 40 (or heavier) steel sleeve cast or grouted into floor assembly, flush with floor surfaces.

3. **Cables —** Aggregate cross-sectional area of bundled cables in opening to be min 25 percent to max 45 percent

of the cross-sectional area of the opening. Cables to be rigidly supported on both sides of the floor or wall assembly. Any combination of the following types and sizes of cables may be used.

A. Max 300 pair No. 24 AWG telecommunication cable with PVC insulation and jacket. **When telecommunication cable is used, T Rating is 0 hr**

B. Max 500 kcmil single copper connector power cable with thermoplastic insulation and polyvinyl chloride (PVC) jacket. **When single copper conductor power cable is used, T Rating is 0 hr**

C. Max 350 kcmil single connector power cable with either aluminum or copper conductors with cross-linked polyethylene (XLPE) insulation and polyvinyl chloride (PVC) jacket. **When single aluminum conductor power cable is used, T Rating is 0 hr. When single copper conductor power cable is used, T Rating is 1/2 hr**.

D. Max three copper connector No. 6 AWG cable with polyvinyl chloride (PVC) insulation and jacket material. **When multi-connector power cable is used, T Rating is 0 hr**.

E. Max 7/C copper connector No. 12 AWG multiconductor power and control cable with polyvinyl chloride (PVC) or cross-linked polyethylene (XLPE) insulation and PVC jacket. **When multi-connector power cable is used, T Rating is 3/4 hr**.

F. Multiple fiber optical communication cable jacketed with PVC and having a max outside diameter of 1/2 in. **When fiber optic cable is used, T Rating is 3/4 hr**.

G. Max 3/C No. 12 AWG with bare aluminum ground, polyvinyl chloride (PVC) insulated steel Metal-Clad cable+. **When MC cable is used, T Rating is 0 hr**.

4. **Firestop System —** The firestop system shall consist of the following:

A. **Packing Materials —** Min 2 in thickness of min 4 pcf mineral wool batt insualtion firmly packed into opening as a permanent form. Packing material to be recessed from top surface of floor to accommodate the required thickness of fill material.

B. **Fill, Void or Cavity Materials* - Sealant —** Min 1/2 in. thickness of fill material applied within the annulus, flush with top surface of floor.

HILTI CONSTRUCTION CHEMICALS, DIV OF

HILTI INC — FS-ONE Sealant

*Bearing the UL Classification Mark

Last Updated on 2001-11-07

Questions? Notice of Disclaimer Page Top

Copyright © 2006 Underwriters Laboratories Inc.®

The appearance of a company's name or product in this database does not in itself assure that products so identified have been manufactured under UL's Follow-Up Service. Only those products bearing the UL Mark should be considered to be Listed and covered under UL's Follow-Up Service. Always look for the Mark on the product.

UL permits the reproduction of the material contained in the Online Certification Directory subject to the following conditions: 1. The Guide Information, Designs and/or Listings (files) must be presented in their entirety and in a non-misleading manner, without any manipulation of the data (or drawings). 2. The statement "Reprinted from the Online Certifications Directory with permission from Underwriters Laboratories Inc." must appear adjacent to the extracted material. In addition, the reprinted material must include a copyright notice in the following format: "Copyright © 2006 Underwriters Laboratories Inc.®"

An independent organization working for a safer world with integrity, precision and knowledge.

UL Online Certifications Directory

XHEZ.F-A-5019
Through-penetration Firestop Systems

Page Bottom

Through-penetration Firestop Systems

See General Information for Through-penetration Firestop Systems

System No. F-A-5019

August 26, 2005

F Rating — 2 Hr

T Rating — 1/2 Hr

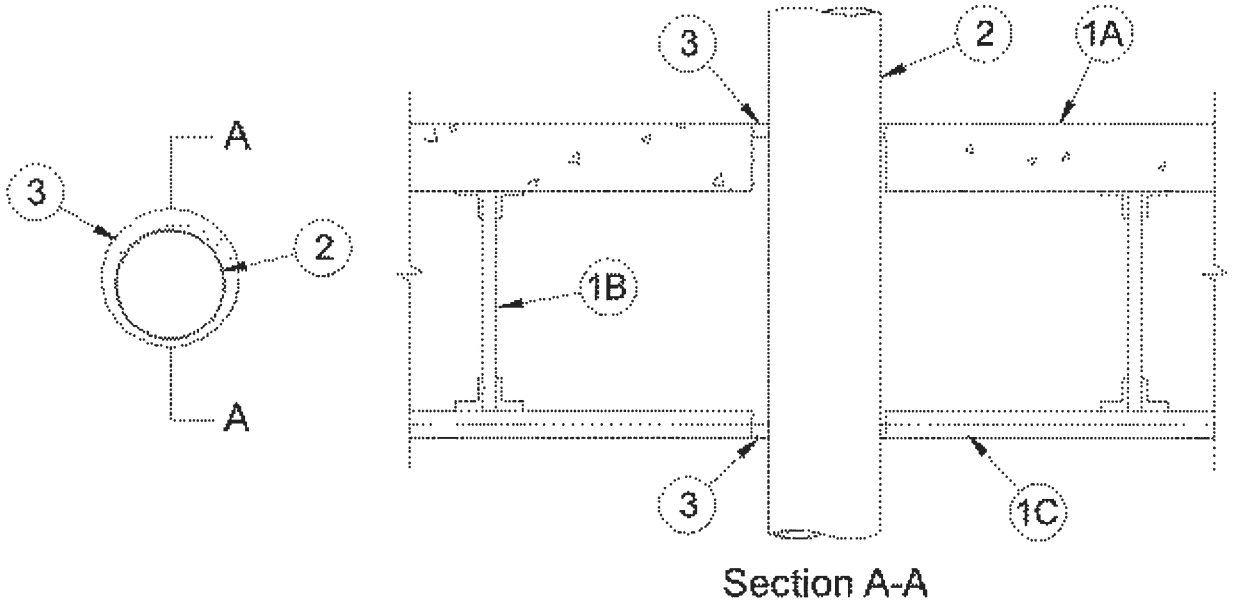

1. **Floor or Wall Assembly —** Min 2-1/2 in. thick reinforced lightweight or normal weight (100-150 pcf) concrete. Max diam of opening is 7 in.

1A. **Floor Assembly —** (Optional-Not Shown)- The fire rated unprotected concrete and steel floor assembly shall be constructed of the materials and in the manner specified in the individual D900 Series designs in the UL Fire Resistance Directory and as summarized below:

A. **Concrete —** Min 2-1/2 in. thick reinforced lightweight or normal weight (100-150 pcf) concrete.

B. **Steel Floor and Form Units* —** Composite or non-composite max 3 in. deep galv steel fluted units as specified in the individual Floor-Ceiling Design.

1B. **Sheet Metal Sleeve —** (Optional Not Shown) Max 6 in. diam, min 26 ga galv steel provided with a 26 ga galv steel square flange spot welded to the sleeve at approx mid-height and sized to be a min of 2 in. larger than the sleeve diameter. The sleeve is to be cast in place and may extend a max of 4 in. below the bottom of the deck and a max of 1 in. above the top surface of the concrete floor.

1C. **Sheet Metal Sleeve —** (Optional Not Shown) - Max 12 in. diam, min 24 ga galv steel provided with a 24 ga galv steel square flange spot welded to the sleeve at approx mid-height and sized to be a min of 2 in. larger than

the sleeve diameter. The sleeve is to be cast in place and may extend a max of 4 in. below the bottom of the deck and a max of 1 in. above the top surface of the concrete floor.

2. **Through Penetrants —** One metallic pipe or tubing to be installed within the firestop device. Pipe or tubing to be rigidly supported on both sides of floor assembly. The following types of pipe or tubing may be used.

Steel Pipe — Nom 4 in. diam (or smaller) Schedule 10 (or heavier) steel pipe.

Copper Tubing — Nom 4 in. diam (or smaller) Type L (or heavier) copper tubing.

Copper Pipe — Nom 4 in. diam (or smaller) Regular (or heavier) copper pipe.

3. **Tube Insulation - Plastics+ —** Nom 3/4 in. thick acryonitrile butadiene/polyvinyl chloride (AB/PVC) flexible foam furnished in the form of tubing. The annular space shall be min 0 in. (point contact) to max 1-3/8 in.

See **Plastics+** (QMFZ2) Category in the Plastics Recognized Component Directory for names of manufacturers. Any Recognized Component tube insulation material meeting the above specifications and having a UL94 Flammability Classification of 94-5VA may be used.

4. **Packing Material —** Min 2 in. thickness of min 4 pcf mineral wool batt insulation firmly packed into opening as a permanent form. Packing material to be recessed from top surface of floor as required to accommodate the required thickness of fill material.

5. **Fill, Void or Cavity Material*- Sealant —** Min 1/2 in. thickness of fill material applied within the annulus, flush with the top surface of floor. At point contact a min 1/2 in. bead of fill material shall be applied at the concrete/pipe interface on top surface of floor.

HILTI CONSTRUCTION CHEMICALS, DIV OF

HILTI INC — FS-ONE Sealant

*Bearing the UL Classification Mark

Last Updated on 2005-08-26

Questions? Notice of Disclaimer Page Top

Copyright © 2006 Underwriters Laboratories Inc.®

The appearance of a company's name or product in this database does not in itself assure that products so identified have been manufactured under UL's Follow-Up Service. Only those products bearing the UL Mark should be considered to be Listed and covered under UL's Follow-Up Service. Always look for the Mark on the product.

UL permits the reproduction of the material contained in the Online Certification Directory subject to the following conditions: 1. The Guide Information, Designs and/or Listings (files) must be presented in their entirety and in a non-misleading manner, without any manipulation of the data (or drawings). 2. The statement "Reprinted from the Online Certifications Directory with permission from Underwriters Laboratories Inc." must appear adjacent to the extracted material. In addition, the reprinted material must include a copyright notice in the following format: "Copyright © 2006 Underwriters Laboratories Inc.®"

An independent organization working for a safer world with integrity, precision and knowledge.

UL Online Certifications Directory

XHEZ.F-A-5021
Through-penetration Firestop Systems

Page Bottom

Through-penetration Firestop Systems

See General Information for Through-penetration Firestop Systems

System No. F-A-5021

February 27, 2006

F Rating — 2 Hr

T Rating — 0 Hr

L Rating At Ambient — 4 CFM/Sq Ft

L Rating At 400 F — Less Than 1 CFM/Sq Ft

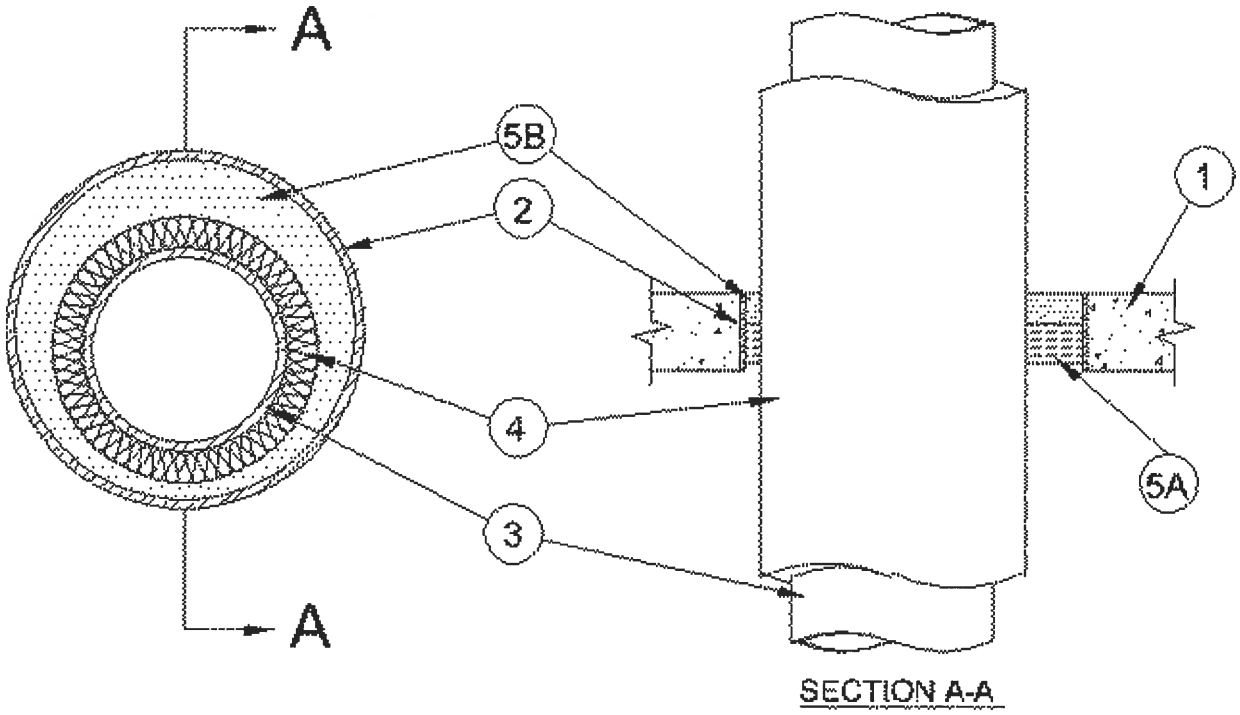

1. **Floor Assembly —** Min 2-1/2 in. thick reinforced lightweight or normal weight (100-150 pcf) concrete. Max diam of opening is 18 in.

1A. **Floor Assembly —** (Optional — Not Shown) — The fire rated unprotected concrete and steel floor assembly shall be constructed of the materials and in the manner specified in the individual D900 Series designs in the UL Fire Resistance Directory and as summariezed below:

A. **Concrete —** Min 2-1/2 in. thick reinforced lightweight on normal weight (100-150 pcf) concrete.

B. **Steel Floor and Form Units* —** Composite or non-composite max 3 in. deep galv steel fluted units as specified in the individual Floor-Ceiling Design.

2. **Metallic Sleeve —** (Optional) — Nom 18 in. diam (or smaller) Schedule 10 (or heavier) steel pipe.

2A. **Sheet Metal Sleeve —** (Optional) Max 6 in. diam, min 26 ga galv steel provided with a 26 ga galv steel square

flange spot welded to the sleeve at approx mid-height and sized to be a min of 2 in. larger than the sleeve diam. The sleeve is to be cast in place and may extend a max of 4 in. below the bottom of the floor and a max of 1 in. above the top surface of the floor.

2B. **Sheet Metal Sleeve —** (Optional) - Max 12 in. diam, min 24 ga galv steel provided with a 24 ga galv steel square flange spot welded to the sleeve at approx mid-height and sized to be a min of 2 in. larger than the sleeve diam. The sleeve is to be cast in place and may extend a max of 4 in. below the bottom of the floor and a max of 1 in. above the top surface of the floor.

3. **Through-Penetrant —** One metallic pipe or tubing to be installed within the firestop device. Pipe or tubing to be rigidly supported on both sides of floor assembly. The following types of pipe or tubing may be used:

Steel Pipe — Nom 12 in. diam (or smaller) Schedule 10 (or heavier) steel pipe.

Copper Tubing — Nom 6 in. diam (or smaller) Type L (or heavier) copper tubing.

Copper Pipe — Nom 6 in. diam (or smaller) Regular (or heavier) copper pipe.

4. **Pipe Covering* —** Nom 1-1/2 in. thick hollow cylindrical heavy density (min 3.5 pcf) glass fiber units, jacketed on the outside with an all service jacket. Longitudinal joints sealed with metal fasteners or factory-applied SSL tape. Transverse joints secured with metal fasteners or with butt tape supplied with the product. The annular space between the insulated pipe and the periphery of the opening shall be min 1/2 in. to a max 1-7/8 in.

See **Pipe Equipment Covering — Materials** (BRGU) category in the Building Materials Directory for names of manufacturers. Any pipe covering material meeting the above specifications and bearing the UL Classification Marking with a Flame Spread Index of 25 or less and a Smoke Developed Index of 50 or less may be used.

5. **Firestop System —** The firestop system shall consist of the following:

A. **Packing Material —** Min 1-1/2 in. thickness of min 4 pcf mineral wool batt insulation firmly packed into opening as a permanent form. Packing material to be recessed from top surface of floor as required to accommodate the required thickness of fill material.

B. **Fill, Void or Cavity Material* — Sealant —** Min 1 in. thickness of fill material applied within the annulus, flush with top surface of floor. In addition, when steel sleeve extends beyond top surface of floor, a min 3/8 in. bead of sealant shall be applied at the interface of the sleeve and concrete around periphery of opening at top surface of floor.

HILTI CONSTRUCTION CHEMICALS, DIV OF

HILTI INC — FS-ONE Sealant

*Bearing the UL Classification Mark

Last Updated on 2006-02-27

Questions? Notice of Disclaimer Page Top

Copyright © 2006 Underwriters Laboratories Inc.®

The appearance of a company's name or product in this database does not in itself assure that products so identified have been manufactured under UL's Follow-Up Service. Only those products bearing the UL Mark should be considered to be Listed and covered under UL's Follow-Up Service. Always look for the Mark on the product.

UL permits the reproduction of the material contained in the Online Certification Directory subject to the following conditions: 1. The Guide Information, Designs and/or Listings (files) must be presented in their entirety and in a non-misleading manner, without any manipulation of the data (or drawings). 2. The statement "Reprinted from the Online Certifications Directory with permission from Underwriters Laboratories Inc." must appear adjacent to the extracted material. In addition, the reprinted material must include a copyright notice in the following format: "Copyright © 2006 Underwriters Laboratories Inc.®"

An independent organization working for a safer world with integrity, precision and knowledge.

UL Online Certifications Directory

XHEZ.W-J-1067
Through-penetration Firestop Systems

Page Bottom

Through-penetration Firestop Systems

See General Information for Through-penetration Firestop Systems

System No. W-J-1067

December 04, 2002

F Ratings — 1 and 2 Hr (See Items 1 and 3)

T Rating — 0 Hr

L Rating at Ambient—Less Than 1 CFM/Sq Ft

L Rating At 400 F—4 CFM/Sq Ft

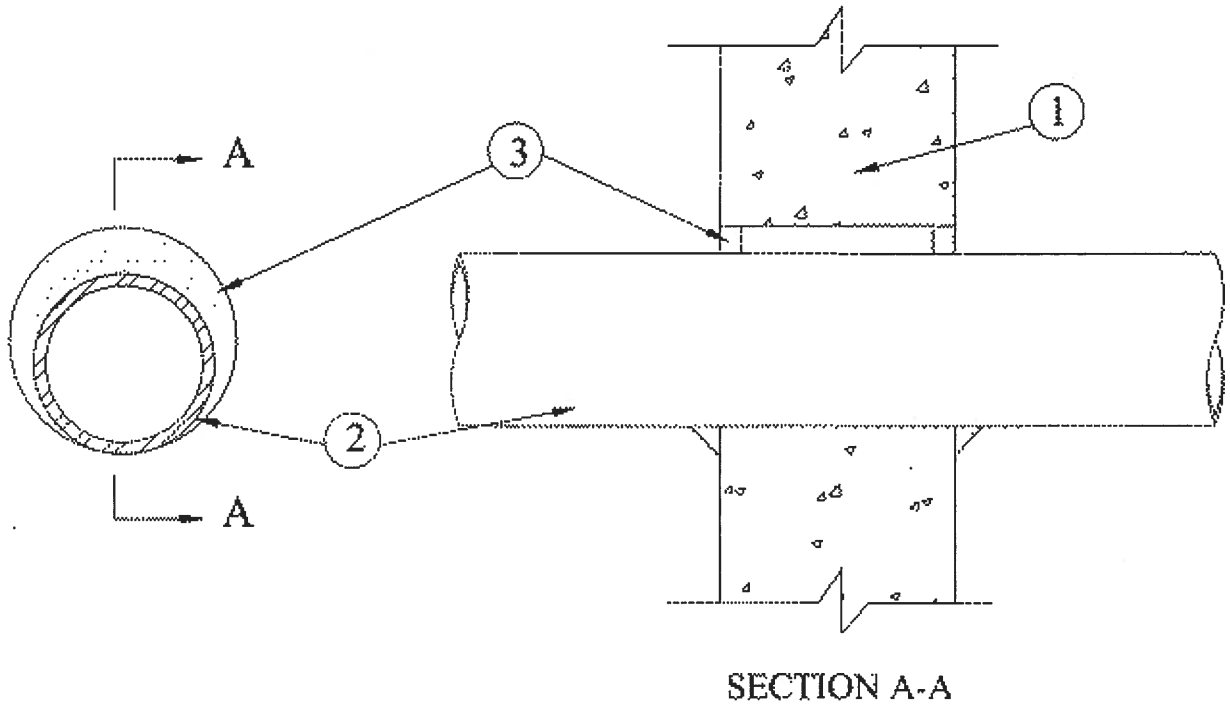

1. **Wall Assembly —** Min 3-3/4 in. and 5 in. thick reinforced lightweight or normal weight (100-150 pcf) concrete for 1 and 2 h rated assemblies, respectively. Wall may also be constructed of any UL Classified **Concrete Blocks*.** Max diam of opening is 32-1/4 in.

See **Concrete Blocks** (CAZT) category in the Fire Resistance Directory for names of manufacturers.

2. **Through—Penetrants —** One metallic pipe, conduit or tubing to be centered within the firestop system. The annular space shall be min 0 in. to max 2-1/4 in. Pipe may be installed with continuous point contact. Pipe, conduit or tube may be installed at an an angle not greater than 45 degrees from perpendicular. Pipe, conduit or tubing to be rigidly supported on both sides of wall assembly. The following types and sizes of metallic pipes, conduits or tubing may be used:

A. **Steel Pipe —** Nom 30 in. diam (or smaller) Schedule 10 (or heavier) steel pipe.

B. **Iron Pipe —** Nom 30 in. diam (or smaller) cast or ductile iron pipe.

C. **Conduit —** Nom 4 in. diam (or smaller) steel electrical metallic tubing or 6 in. diam (or smaller) steel conduit.

D. **Copper Tubing —** Nom 6 in. diam (or smaller) Type L (or heavier) copper tubing.

E. **Copper Pipe —** Nom 6 in. diam (or smaller) Regular (or heavier) copper pipe.

3. **Fill, Void or Cavity Material* —** Min 5/8 in. thickness of fill material applied within the annulus, flush with both surfaces of wall. At the point or continuous contact locations between pipe and wall, a min 1/2 in. diam bead of fill material shall be applied at the pipe-wall interface on both surfaces of wall.

HILTI CONSTRUCTION CHEMICALS, DIV OF

HILTI INC — FS-One Sealant

*Bearing the UL Classification Mark

Last Updated on 2002-12-04

Questions? Notice of Disclaimer Page Top

Copyright © 2006 Underwriters Laboratories Inc.®

The appearance of a company's name or product in this database does not in itself assure that products so identified have been manufactured under UL's Follow-Up Service. Only those products bearing the UL Mark should be considered to be Listed and covered under UL's Follow-Up Service. Always look for the Mark on the product.

UL permits the reproduction of the material contained in the Online Certification Directory subject to the following conditions: 1. The Guide Information, Designs and/or Listings (files) must be presented in their entirety and in a non-misleading manner, without any manipulation of the data (or drawings). 2. The statement "Reprinted from the Online Certifications Directory with permission from Underwriters Laboratories Inc." must appear adjacent to the extracted material. In addition, the reprinted material must include a copyright notice in the following format: "Copyright © 2006 Underwriters Laboratories Inc.®"

An independent organization working for a safer world with integrity, precision and knowledge.

UL Online Certifications Directory

XHEZ.W-J-3060
Through-penetration Firestop Systems

Page Bottom

Through-penetration Firestop Systems

See General Information for Through-penetration Firestop Systems

System No. W-J-3060

September 14, 2004

F Rating — 2 Hr

T Rating — 0 Hr

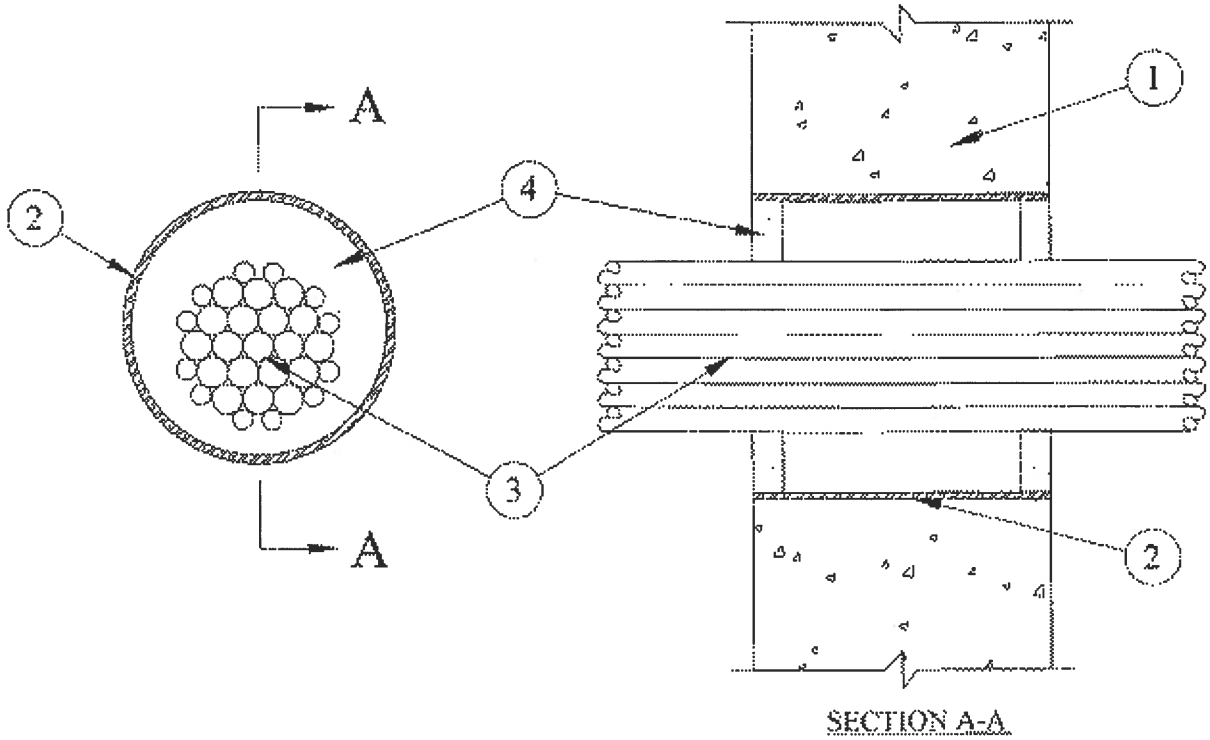

1. **Wall Assembly —** Min 5 in. thick reinforced lightweight or normal weight (100-150 pcf) concrete. Wall may also be constructed of any UL Classified **Concrete Blocks***. Max diam of opening is 4 in.

See **Concrete Blocks** (CAZT) category in the Fire Resistance Directory for names of manufacturers.

2. **Steel Sleeve —** (Optional) — Nom 4 in. diam (or smaller) steel electrical metallic tubing (EMT) of Schedule 5 (or heavier) steel pipe or min 0.016 thick (28 MSG) galv steel sleeve friction fit or cast into wall flush with wall surfaces. When Schedule 5 steel pipe or EMT is used, sleeve may extend up to 18 in. beyond the wall surfaces.

3. **Cables —** Aggregate cross sectional area of cables to be max 45 percent of the cross sectional area of the opening. Cables installed either concentrically or eccentrically within the firestop system. The annular space between cables and the periphery of the opening shall be min 1/4 in. to max 3/4 in. Cables to be rigidly supported on both sides of wall assembly. The following types of cables may be used:

A. 7/C No. 12 AWG cable with PVC insulation and outer jacket.

B. Max 25 pair No. 24 AWG telephone cable with PVC insulation and outer jacket.

C. Max RG 59 (or smaller) coaxial cable with polyethylene insulation and PVC jacket.

D. Multiple 24 fiber optic communication cable with PVC jacket, have a max outside diam of 5/8 in.

E. Through Penetrating Products*—Max three copper connector No. 8 AWG **Metal-clad Cable+**.

AFC CABLE SYSTEMS INC

4. **Fill, Void or Cavity Material* — Sealant —** Min 5/8 in. thickness of fill material applied within annulus, flush with both surfaces of wall assembly. An additional 1/2 in. bead of fill material shall be applied around the perimeter of sleeve on both sides of the wall when sleeve extends beyond surface of wall.

HILTI CONSTRUCTION CHEMICALS, DIV OF

HILTI INC — CP601S, CP606 or FS-ONE Sealant

*Bearing the UL Classification Mark

+Bearing the UL Listing Mark

Last Updated on 2004-09-14

Questions? Notice of Disclaimer Page Top

Copyright © 2006 Underwriters Laboratories Inc.®

The appearance of a company's name or product in this database does not in itself assure that products so identified have been manufactured under UL's Follow-Up Service. Only those products bearing the UL Mark should be considered to be Listed and covered under UL's Follow-Up Service. Always look for the Mark on the product.

UL permits the reproduction of the material contained in the Online Certification Directory subject to the following conditions: 1. The Guide Information, Designs and/or Listings (files) must be presented in their entirety and in a non-misleading manner, without any manipulation of the data (or drawings). 2. The statement "Reprinted from the Online Certifications Directory with permission from Underwriters Laboratories Inc." must appear adjacent to the extracted material. In addition, the reprinted material must include a copyright notice in the following format: "Copyright © 2006 Underwriters Laboratories Inc.®"

An independent organization working for a safer world with integrity, precision and knowledge.

UL Online Certifications Directory

XHEZ.W-J-5041
Through-penetration Firestop Systems

Page Bottom

Through-penetration Firestop Systems

See General Information for Through-penetration Firestop Systems

System No. W-J-5041

February 08, 2006

F Ratings — 1 and 2 Hr (See Item 1)

T Ratings — 3/4 Hr

L Rating at Ambient — Less Than 1 CFM/sq ft

L Rating at 400 F — Less Than 1 CFM/sq ft

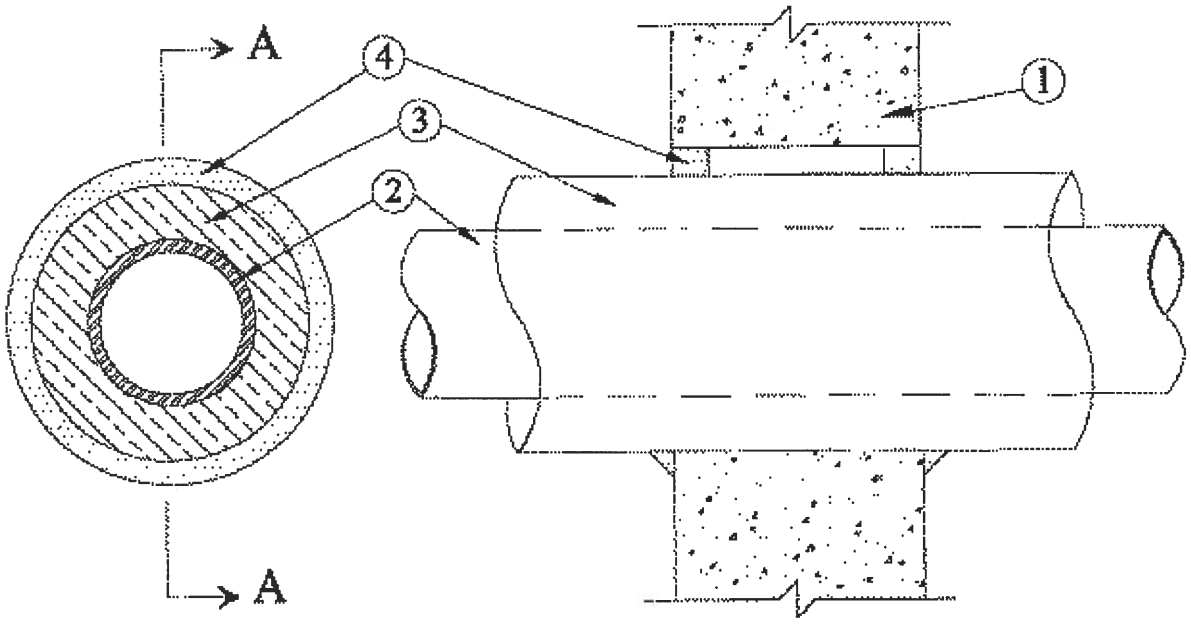

SECTION A-A

1. **Wall Assembly —** Min 3-3/4 in. and 5 in. thick reinforced lightweight or normal weight (100-150 pcf) concrete for 1 and 2 h rated assemblies respectively. Wall may also be constructed of any UL Classified **Concrete Blocks*.** Max diam of opening is 7-1/2 in.

See **Concrete Blocks** (CAZT) category in the Fire Resistance Directory for names of manufacturers.

2. **Through— Penetrants —** One metallic pipe or tubing to be centered within the firestop system. Pipe or tubing to be rigidly supported on both sides of wall assembly. The following types and sizes of metallic pipes or tubing may be used:

A. **Steel Pipe —** Nom 4 in. diam (or smaller) Schedule 40 (or heavier) steel pipe.

B. **Copper Tubing —** Nom 2 in. diam (or smaller) Type L (or heavier) copper tubing.

C. **Copper Pipe —** Nom 2 in. diam (or smaller) regular (or heavier) copper pipe.

3. **Tube Insulation—Plastics+ —** Nom 3/4 in. thick acrylonitrile butadiene/polyvinyl chloride (AB/PVC) flexible foam furnished in the form of tubing. An annular space of min 0 in. (point contact) to max 1-1/2 in. is required within the firestop system.

See **Plastics+** (QMFZ2) category in the Recognized Component Directory for names of manufacturers. Any Recognized Component tube insulation material meeting the above specifications and having a UL 94 Flammability Classification of 94-5VA may be used.

The hour T Rating of the firestop system is dependent on the size and type of through penetrant and the pipe diam, as shown in the table below:

Type+	Through Penetrant Max Diam, In.
A	4
A, B or C	2

+-Indicates penetrant type as itemized in Item 2.

4. **Fill, Void or Cavity Material*—Sealant —** Min 5/8 in. thickness of fill material applied within the annulus, flush with both surfaces of wall. At the point contact location between pipe covering and wall, a min 1/2 in. diam bead of fill material shall be applied at the pipe covering/wall interface on both surfaces of wall

HILTI CONSTRUCTION CHEMICALS, DIV OF

HILTI INC — FS-ONE Sealant

*Bearing the UL Classification Mark

Last Updated on 2006-02-08

Questions? Notice of Disclaimer Page Top

Copyright © 2006 Underwriters Laboratories Inc.®

The appearance of a company's name or product in this database does not in itself assure that products so identified have been manufactured under UL's Follow-Up Service. Only those products bearing the UL Mark should be considered to be Listed and covered under UL's Follow-Up Service. Always look for the Mark on the product.

UL permits the reproduction of the material contained in the Online Certification Directory subject to the following conditions: 1. The Guide Information, Designs and/or Listings (files) must be presented in their entirety and in a non-misleading manner, without any manipulation of the data (or drawings). 2. The statement "Reprinted from the Online Certifications Directory with permission from Underwriters Laboratories Inc." must appear adjacent to the extracted material. In addition, the reprinted material must include a copyright notice in the following format: "Copyright © 2006 Underwriters Laboratories Inc.®"

An independent organization working for a safer world with integrity, precision and knowledge.

UL Online Certifications Directory

XHEZ.W-J-5042
Through-penetration Firestop Systems

Page Bottom

Through-penetration Firestop Systems

See General Information for Through-penetration Firestop Systems

System No. W-J-5042

February 08, 2006

F Ratings — 1 and 2 Hr (See Items 1 and 4)

T Ratings — 1/2, 3/4, 1, 1-1/2 and 1-3/4 Hr (See Item 3)

L Rating At Ambient — 4 CFM/Sq Ft

L Rating at 400 F — Less Than 1 CFM/Sq Ft

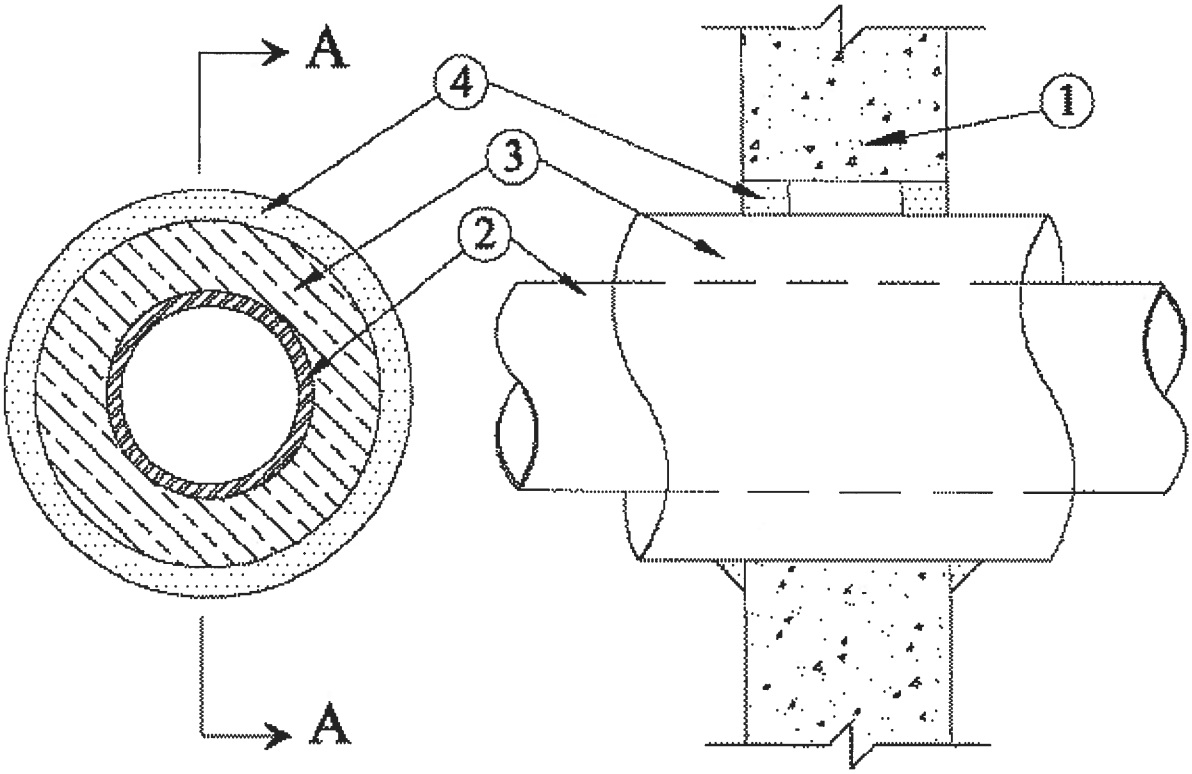

SECTION A-A

1. **Wall Assembly —** Min 3-3/4 in. and 5 in. thick reinforced lightweight or normal weight (100-150 pcf) concrete for 1 and 2 h rated assemblies, respectively. Wall may also be constructed of any UL Classified **Concrete Blocks*.** Max diam of opening is 18-5/8 in.

See **Concrete Blocks** (CAZT) category in the Fire Resistance Directory for names of manufacturers.

2. **Through—Penetrants —** One metallic pipe or tubing to be centered within the firestop system. Pipe or tubing to be rigidly supported on both sides of wall assembly. The following types and sizes of metallic pipes or tubing

may be used:

A. **Steel Pipe —** Nom 12 in. diam (or smaller) Schedule 10 (or heavier) steel pipe.

B. **Iron Pipe —** Nom 12 in. diam (or smaller) cast or ductile iron pipe.

C. **Copper Tubing —** Nom 6 in. diam (or smaller) Type L (or heavier) copper tubing.

D. **Copper Pipe —** Nom 6 in. diam (or smaller) Regular (or heavier) copper pipe.

3. **Pipe Covering* —** Nom 1, 1-1/2 or 2 in. thick hollow-cylindrical heavy density (min 3.5 pcf) glass fiber units jacketed on the outside with an all service jacket. Longitudinal joints sealed with metal fasteners or factory-applied self-sealing lap tape. Transverse joints secured with metal fasteners or with butt tape supplied with the product.

See **Pipe and Equipment Covering Materials** (BRGU) category in the Building Materials Directory for the names of the manufacturers. Any pipe covering material meeting the above specifications and bearing the UL Classification Marking with a Flame Spread Index of 25 or less and a Smoke Developed Index of 50 or less may be used.

The hourly T Rating of the firestop system is dependent on the size and type of through penetrant, the pipe covering thickness and the annular space as shown in the the table below:

Wall Assembly Rating Hr	Through Penetrant		Pipe Covering Thkns In.	Annular Space		T Rating Hr
	Type +	Max Diam In.		Min In.	Max In.	
1	A, B	4	1	0	1-1/2	1/2
1	C or D	2	1 or 1-1/2	0	1-1/2	1/2
1	A, B	4	1-1/2	0	1-1/2	1
1	A, B	10	2	0	1-7/8	3/4
1	C or D	6	2	0	1-7/8	1
2	A, B	4	1	0	1-1/2	1
2	C or D	4	1 or 1-1/2	0	1-1/2	1
2	A, B	4	1-1/2	0	1-1/2	1-3/4
2	A, B	12	2	0	1-7/8	1-1/2
2	C or D	6	2	0	1-7/8	1

+-Indicates penetrant type as itemized in Item 2.

4. **Fill, Void or Cavity Material*—Sealant —** Min 5/8 in. thickness of fill material applied within the annulus, flush with both surfaces of wall. At the point contact location between pipe covering and wall, a min 1/2 in. diam bead of fill material shall be applied at the pipe covering/wall interface on both surfaces of wall.

HILTI CONSTRUCTION CHEMICALS, DIV OF

HILTI INC — FS-One Sealant

*Bearing the UL Classification Mark

Last Updated on 2006-02-08

Questions? Notice of Disclaimer Page Top

Copyright © 2006 Underwriters Laboratories Inc.®

The appearance of a company's name or product in this database does not in itself assure that products so identified have been manufactured under UL's Follow-Up Service. Only those products bearing the UL Mark should be considered to be Listed and covered under UL's Follow-Up Service. Always look for the Mark on the product.

UL permits the reproduction of the material contained in the Online Certification Directory subject to the following conditions: 1. The Guide Information, Designs and/or Listings (files) must be presented in their entirety and in a non-misleading manner, without any manipulation of the data (or drawings). 2. The statement "Reprinted from the Online Certifications Directory with permission from Underwriters Laboratories Inc." must appear adjacent to the extracted material. In addition, the reprinted material must include a copyright notice in the following format: "Copyright © 2006 Underwriters Laboratories Inc.®"

An independent organization working for a safer world with integrity, precision and knowledge.

UL Online Certifications Directory

XHEZ.W-J-7022
Through-penetration Firestop Systems

Page Bottom

Through-penetration Firestop Systems

See General Information for Through-penetration Firestop Systems

System No. W-J-7022

November 30, 2000

F Ratings — 1 and 2 Hr (See Items 1 and 3)

T Rating — 0 Hr

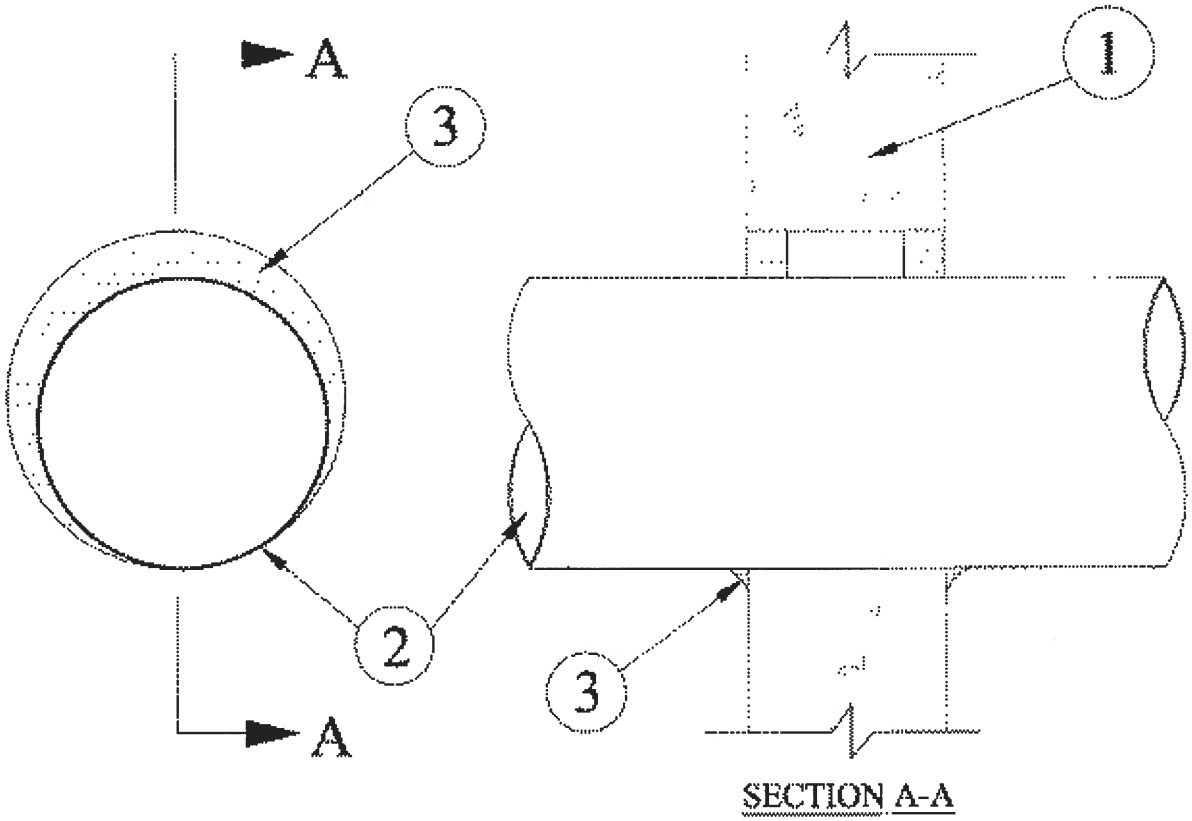

1. **Wall Assembly —** Min 3-3/4 in. and 5 in. thick reinforced lightweight or normal weight (100-150 pcf) concrete for 1 and 2 hr ratings , respectively. Wall may also be constructed of any UL Classified **Concrete Blocks*.** Max diam of opening is 21- 1/2 in.

See **Concrete Blocks** (CAZT) category in the Fire Resistance Directory for names of manufacturers.

2. **Through Penetrant —** Nom galv steel duct to be installed concentrically or eccentrically within the firestop system. The annular space between duct and periphery of opening shall be min 0 in. (point contact) and max 1-1/2 in. Duct to be rigidly supported on both sides of wall assembly.

A. **Spiral Wound HVAC Duct —** Nom 20 in. diam (or smaller) No. 24 MSG (or heavier) galv steel spiral wound duct.

A. **Sheet Metal Duct —** Nom 12 in. diam (or smaller) No. 28 MSG (or heavier) galv sheet steel duct.

3. **Fill, Void or Cavity Material* — Sealant —** Min 5/8 in. and 1-1/4 in. thickness of fill material applied within annulus, flush with both surfaces of wall assembly for 1 or 2 hr F Ratings, respectively. At the point contact location between duct and periphery of opening, a min 1/2 in. diam bead of sealant shall be applied at the periphery/duct interface on both surfaces of wall assembly.

HILTI CONSTRUCTION CHEMICALS, DIV OF

HILTI INC — CP 601S Elastomeric Firestop Sealant, FS-ONE Sealant or CP606 Flexible Firestop Sealant

*Bearing the UL Classification Mark

Last Updated on 2000-11-30

Questions? Notice of Disclaimer Page Top

Copyright © 2006 Underwriters Laboratories Inc.®

The appearance of a company's name or product in this database does not in itself assure that products so identified have been manufactured under UL's Follow-Up Service. Only those products bearing the UL Mark should be considered to be Listed and covered under UL's Follow-Up Service. Always look for the Mark on the product.

UL permits the reproduction of the material contained in the Online Certification Directory subject to the following conditions: 1. The Guide Information, Designs and/or Listings (files) must be presented in their entirety and in a non-misleading manner, without any manipulation of the data (or drawings). 2. The statement "Reprinted from the Online Certifications Directory with permission from Underwriters Laboratories Inc." must appear adjacent to the extracted material. In addition, the reprinted material must include a copyright notice in the following format: "Copyright © 2006 Underwriters Laboratories Inc.®"

An independent organization working for a safer world with integrity, precision and knowledge.

FIRESTOPPING DRAWINGS

CONCRETE TOP-OF-WALL ASSEMBLIES

CONCRETE MASONRY UNIT (CMU) TOP-OF-WALL ASSEMBLIES

08033.
FIRESTOPPING
07 84 00 (07840)

2006

System No. HW-D-0097

Assembly Rating – 2 Hr
Nominal Joint Width – 2 In.
Class II Movement Capabilities – 12.5% Compression or Extension

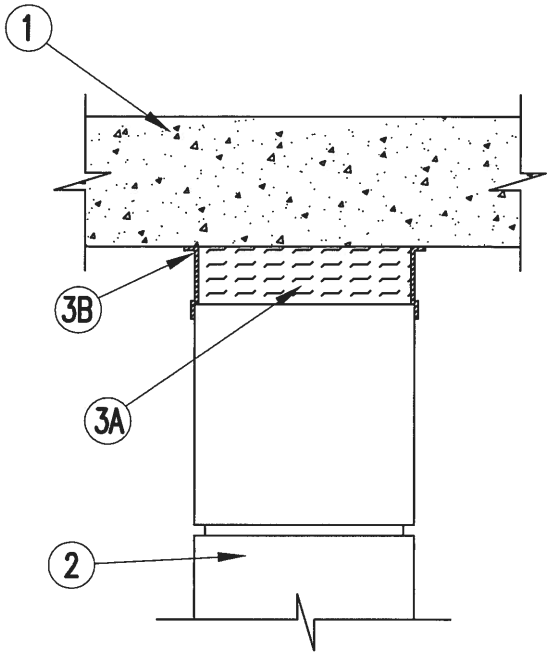

1. **Floor Assembly** Min 4-1/2 in. thick steel-reinforced lightweight or normal weight (100-150 pcf) structural concrete.
2. **Wall Assembly** Min 4-5/8 in. thick steel-reinforced lightweight or normal weight (100-150 pcf) structural concrete. Wall may also be constructed of any UL Classified **Concrete Blocks***.

   See **Concrete Blocks** (CAZT) category in the Fire Resistance Directory for names of manufacturers.
3. **Joint System Max width of joint (at time of installation of joint system) is 2 in. The joint system is designed to accommodate a max 12.5 percent compression or extension from its installed width.** The joint system shall consist of the following:

   A. **Forming Material** Min 4.0 pcf mineral wool batt insulation installed in joint opening as a permanent form. Batt cut to min width of 4-3/8 in. and installed cut edge-first into joint opening, parallel with joint direction, such that batt sections are compressed min 50 percent in thickness and such that the compressed batt sections are recessed from both surfaces of wall to accommodate the required thickness of fill material. Adjoining lengths of batt to be tightly butted with butted seams spaced min 48 in. apart along the length of the joint.

   Rock Wool Mfg. Co. – Delta Board

   B. **Fill, Void or Cavity Material* – Sealant** – Min 1/8 in. wet thickness of fill material applied within the joint, flush with both surfaces of wall and lapping 1/2 in. onto bottom surface of floor and wall.

   HILTI CONSTRUCTION CHEMICALS, DIV OF HILTI, Inc. – CP672 Firestop Spray

*Bearing the UL Classification Marking

System No. HW-D-0181

Assembly Rating – 2 Hr
Nominal Joint Width – 1 In.
Class II and III Movement Capabilities – 12.5% Compression

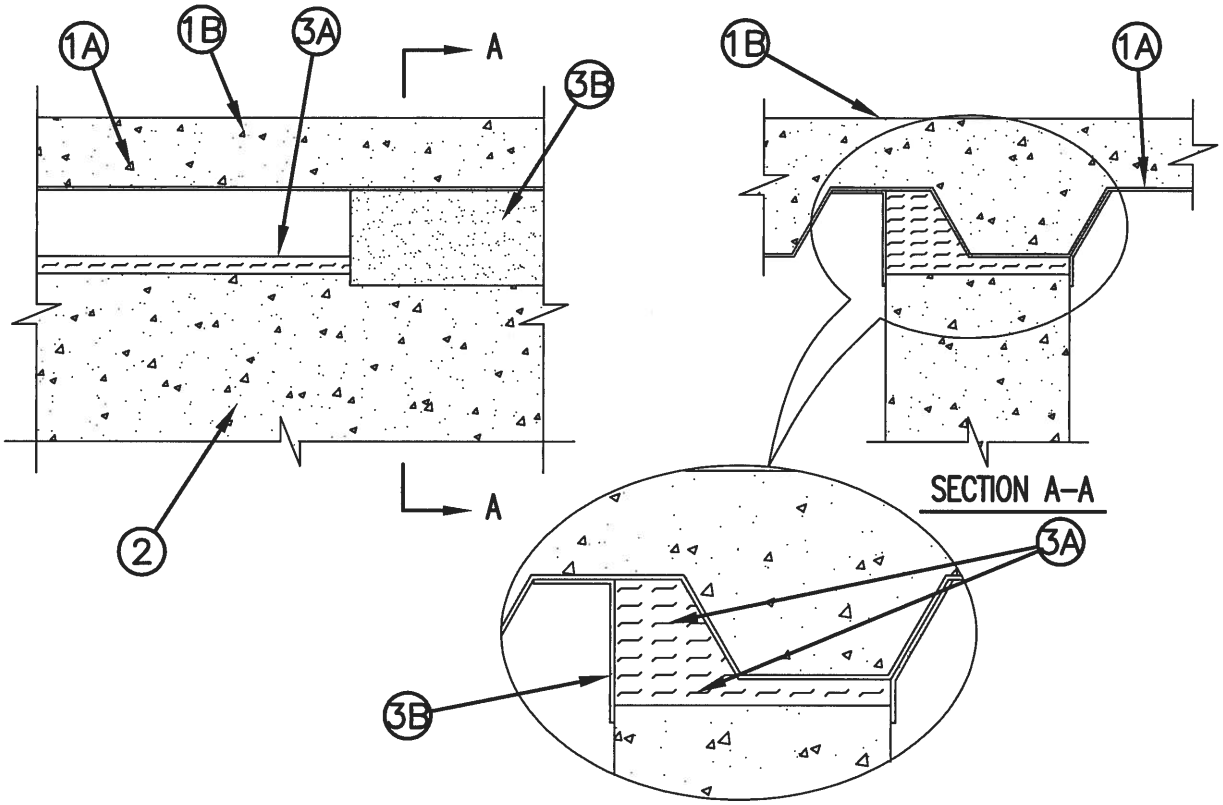

1. Floor Assembly The 2 hr fire-rated fluted steel deck/concrete floor assembly shall be constructed of the materials and in the manner described in the individual D700 Floor-Ceilng Design in the UL Fire Resistance Directory and shall include the following construction features:
   A. Steel Floor And Form Units* Max 3 in. deep galv steel fluted floor units.
   B. Concrete Min 2-1/2 in. thick reinforced concrete, as measured from the top plane of the floor units.
   C. Spray-Applied Fire Resistive Materals* (Optional)--(Not Shown)--Prior to the installation of the forming material and fill, void or cavity material (Item 3A, 3B) the steel floor units may be sprayed with a min 5/16 to max 1-3/4 in. thickness of fire resistive material in accordance with the specifications in the individual D700 Series Design.
   HILTI CONSTRUCTION CHEMICALS, DIV OF
   HILTI INC -- Type MK-6-HY
2. Wall Assembly Min 8 in. thick reinforced lightweight or normal weight (100-150 pcf) structural concrete. Wall shall be installed parallel with the flutes of the steel floor and form units (Item 1A). Wall may also be constructed of any UL Classified 2 hr fire rated Concrete Blocks* . When wall is constructed of concrete blocks, the top course of block shall be filled with concrete, grout or mortar.

See Concrete Blocks (CAZT) category in the Fire Resistance Directory for names of manufacturers.

Reproduced by HILTI, Inc. Courtesy of
Underwriters Laboratories, Inc.
March 23, 2001

CLASSIFIED C UL US

System No. HW-D-0181

Assembly Rating – 2 Hr
Nominal Joint Width – 1 In.
Class II and III Movement Capabilities – 12.5% Compression

3. Joint System Max separation between bottom of spray-applied fire resistive and top of the wall at time of installation of joint system is 1 in. The joint system is designed to accommodate a max 12.5 percent compression or extension from its installed width . The joint system consists of the following:
   A. Forming Material* Min 4 pcf mineral wool batt insulation cut into strips with a width approx equal to the overall thickness of the wall. Strips compressed 33 percent in thickness and inserted into the gap between the top of the wall and the bottom of the floor units. When the void beneath the protected steel deck is located entirely above the wall, the void shall be completely filled with mineral wool insulation compressed 33 percent in thickness. When void beneath the steel deck is located in part above the wall, that portion of the void above the wall shall be packed with additional strips of mineral wool batt insulation compressed 33 percent in thickness.
   ROCK WOOL MANUFACTURING CO -- Delta Board
   B. Fill, Void or Cavity Material* Min 1/8 in. wet thickness of fill material sprayed or troweled on each side of the wall to completely cover mineral wool forming material and to overlap a min of 1/2 in. onto wall and steel deck on both sides of wall. When spray-applied fire resisitve material* is applied to the steel floor and form units, the fill material is to overlap the wall a min of 1/2 in. and the spray-applied fire resistive material a min of 2 in. on both sides of the wall.

HILTI CONSTRUCTION CHEMICALS, DIV OF
HILTI INC -- CP672 Firestop Spray
*Bearing the UL Classification Mark

Reproduced by HILTI, Inc. Courtesy of
Underwriters Laboratories, Inc.
March 23, 2001

System No. HW-D-1037

Assembly Rating – 2 Hr

Nominal Joint Width – 3-1/2"

Class II Movement Capabilities – 14% Compression or Extension

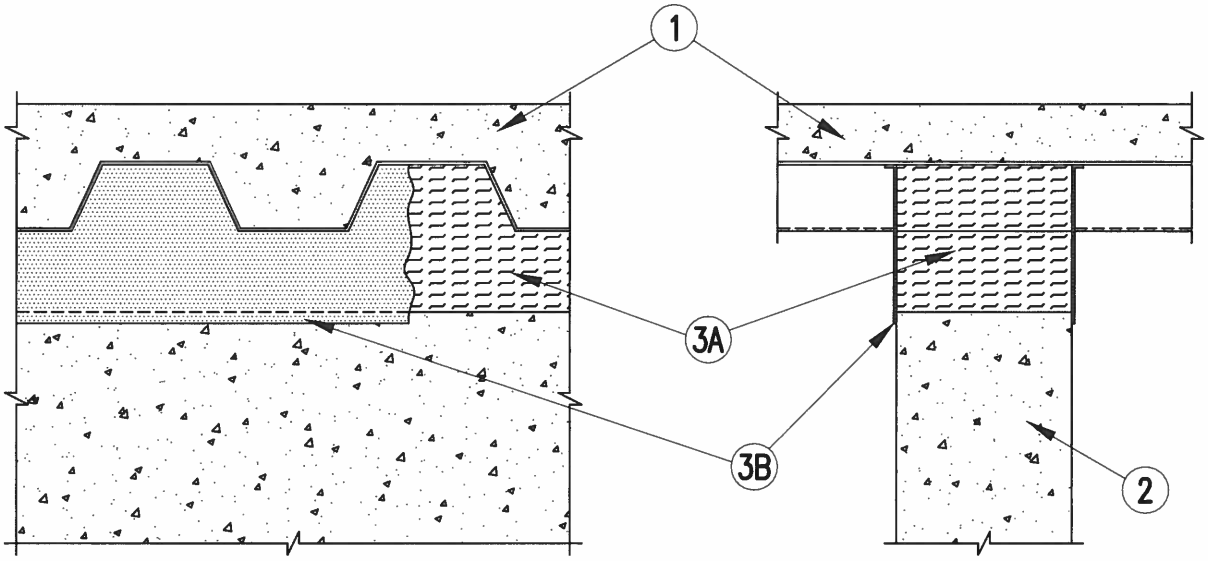

SECTION A–A

1. **Floor Assembly** The fire–rated fluted steel floor unit/concrete floor assembly shall be constructed of the materials and in the manner described in the individual Floor–Ceiling Design in the Fire Resistance Directory and shall include the following construction features:

A. **Steel Floor and Form Units*** Max 3 in. deep galv steel fluted floor units.

B. **Concrete** Min 2–1/2 in. thick reinforced concrete, as measured from the top plane of the floor units.

C . **Spray–Applied Fire Resistive Materials* (Optional)-- (Not Shown)**--Prior to the installation of the forming material and fill, void or cavity material (Items 3A, 3B) the steel floor units may be sprayed with a min 5/16 in. to max 1–3/4 in. thickness of fire resistive material.

W R GRACE & CO – CONN
CONSTRUCTION PRODUCTS DIV -- Type MK–6–HY

1A. **Roof Assembly (Not Shown)** As an alternate to the floor assembly, a fire rated fluted steel deck roof assembly may be used. The roof assembly shall be constructed of the materials and in the manner described in the individual P900 Series Roof–Ceiling Design in the UL Fire Resistance Directory. The hourly rating of the roof assembly shall be equal to or greater than the hourly rating of the wall assembly. The roof assembly shall include the following construction features:

A. **Steel Roof Deck** Max 3 in. deep galv steel fluted roof deck.

B. **Roof Insulation** Min 2–1/4 in. thick poured insulating concrete, as measured from the top plane of the floor units.

System No. HW-D-1037

Assembly Rating – 2 Hr

Nominal Joint Width – 3-1/2"

Class II Movement Capabilities – 14% Compression or Extension

1B. **Roof Assembly** As an alternate to Items 1 and 1A, a fire rated protected fluted steel deck roof assembly may be used. The roof assembly shall be constructed of the materials and in the manner described in the individual P700 Series Roof-Ceiling Design in the UL Fire Resistance Directory. The hourly rating of the roof assembly shall be equal to or greater than the hourly rating of the wall assembly. The roof assembly shall include the following construction features:

A. **Steel Roof Deck** Max 3 in. deep galv steel fluted roof deck.

B. **Spray-Applied Fire Resistive Materials*** (Not Shown) – Prior to the installation of the steel ceiling runners, Forming Material and Fill, Void or Cavity Material (Items 2A, 3A, 3B), the roof assembly shall be sprayed with the type and thickness of fire resistive material indicated in the individual P700 Series design.

2. **Wall Assembly** Min 8 in. thick steel reinforced lightweight or normal weight (100-150 pcf) structural concrete. Wall may also be constructed of any UL Classified **Concrete Blocks***.

See **Concrete Blocks** (CAZT) category in the Fire Resistance Directory for names of manufacturers.

3. **Joint System Max separation between bottom of floor units and top of concrete wall at time of installation is 3-1/2 in. The joint system is designed to accommodate a max 14 percent compression or extension from its installed width.** The joint system shall consists of the following:

A. **Forming Material*** Nominal 4 in thick pieces of nominal 4 pcf forming material sized to attain a min compression rate of 50 percent in the thickness direction firmly packed to completely fill the flutes. Additional pieces of batt insulation, min 8 in. wide, shall be compressed 50 percent in thickness and installed edge first into joint opening between bottom of fluted floor or roof units and top of concrete wall.

THERMAFIBER L L C -- Type SAF

A1. **Forming Material*--Plugs** Optional-Not Shown) Performed mineral wool plugs, formed to the shape of the fluted floor units, friction fit to completely fill the flutes above the ceiling runner. The plugs shall be flush with both wall surfaces. Additional forming material, described in Item 3A, to be used in conjunction with the plugs to fill the gap between the top of the wall and the bottom of the steel floor units.

HILTI CONSTRUCTION CHEMICALS, DIV OF
HILTI INC -- CP777 Speed Plugs

B. **Fill, Void or Cavity Material* – Sealant** A 1/8 in. wet thickness of fill material sprayed of trowled on each side of wall to completely cover mineral wool forming material and to overlap a min 1/2 in. onto steel floor units and concrete wall. When spray-applied fire resistive material* is applied to the steel deck, the fill material is to overlap the wall a min ½ in. and the spray-applied fire resistive material a min of 2 in. on both sides of the wall.

HILTI CONSTRUCTION CHEMICALS, DIV OF
HILTI INC -- CP672 Firestop Spray

*Bearing the UL Classification Mark

SECTION 07 92 00
JOINT SEALANTS

PART 1 GENERAL

1.01 SUMMARY

A. Section Includes:

1. Sealant and Backing Materials including primers, backer rods, bond breakers and accessories.
2. Clean and Prepare Joint Surfaces

B. Related Sections:

1. Section -03 30 00 – Cast-in-Place Concrete
2. Section 04 20 00 – Unit Masonry
3. Section 07 62 00 - Sheet Metal Flashing and Trim
4. Section 07 84 00 – Firestopping
5. Section 08 11 13 – Hollow Metal Doors and Frames
6. Section 09 21 16 - Gypsum Board Assemblies for acoustical sealants
7. Section 09 90 00 - Painting

1.02 REFERENCES

A. ASTM International Publications:

1. C834 "Standard Specification for Latex Sealants"
2. C920 "Standard Specification for Elastomeric Joint Sealants"
3. C1193 "Standard Guide for Use of Joint Sealants"
4. C1248 "Standard Test Method for Staining of Porous Substrate by Joint Sealants"

B. Code of Federal Regulations (CFR) Publications:

1. 21 CFR, Part 177 "Indirect Food Additives: Polymers"

C. Federal Specifications (FS) Publications:

1. TT-S-1543B Sealing Compound; Silicone Rubber Base (For Caulking, Sealing)

D. Underwriter's Laboratories, Inc. (UL) Standards

1. "Fire Resistance Directory"

E. Warnock Hersey, ETL SEMKO division of Intertek (WHI) Publications:

1. "Certification Listings"

1.03 SYSTEM DESCRIPTION

A. Work shall include providing sealant at intersection of construction components within and exterior to building, including, but not limited to the following:

1. Exterior joints in the following vertical surfaces and nontraffic horizontal surfaces:
   a. Control and expansion joints in cast-in-place concrete.
   b. Control and expansion joints in unit masonry.
   c. Joints in exterior insulation and finish systems (EIFS).

d. Joints between metal panels.

e. Joints between different materials listed above.

f. Perimeter joints between materials listed above and frames of doors and windows.

g. Control and expansion joints in ceiling and overhead surfaces.

h. Under thresholds.

i. Refrigerant lines and other Div. 22, 23 and 26 items entering building.

j. Joints in coping caps and exposed roof counter flashing.

k. Other joints as indicated.

2. Exterior joints in the following horizontal traffic surfaces:

a. Control, expansion, and isolation joints in cast-in-place concrete slabs.

b. Joints between different materials listed above.

c. Other joints as indicated.

3. Interior joints in the following vertical surfaces and horizontal nontraffic surfaces:

a. Control and expansion joints on exposed interior surfaces of exterior walls.

b. Perimeter joints of exterior openings where indicated.

c. Vertical control joints on exposed surfaces of interior unit masonry and concrete walls and partitions.

d. Perimeter joints between interior wall surfaces and frames of interior doors, windows, and elevator entrances.

e. Joints between plumbing fixtures and adjoining walls, floors, and counters.

f. Bottom edge of mirror channels

g. Other joints as indicated

4. Interior joints in the following horizontal traffic surfaces:

a. Control and expansion joints in cast-in-place concrete slabs.

b. Joints at countertops, vanities.

c. Under thresholds.

d. Door bucks not flush with thresholds.

e. Lavatories, water closets, and other plumbing fixtures.

f. Perimeters of fixed kitchen equipment.

g. Joints of mirrors in wet areas.

h. Underneath and edge of window stools (interior sills) at gypsum board.

i. Other joints as indicated.

1.04 SUBMITTALS

A. General: Submit the following in accordance with Conditions of Contract and Division 01 Specification Sections:

1. Include product data, samples and manufacturer's surface preparation and installation instructions.

2. List of primers recommended for each application.

3. Submit samples of each color required for each type of joint sealer exposed to view in duplicate.

4. Certifications: Indicate compliance with standards specified in duplicate.

1.05 QUALITY ASSURANCE

A. Installer Qualifications: An experienced installer who has specialized in installing joint sealants similar in material, design, and extent to those indicated for this Project and whose work has resulted in joint-sealant installations with a record of successful in-service performance.

B. Source Limitations: Obtain each type of joint sealant through one source from a single manufacturer.

C. All materials shall be verified by this Contractor to be compatible with adjacent materials.

1.06 DELIVERY, STORAGE, AND HANDLING

A. Deliver materials to Project site in original unopened containers or bundles with labels indicating manufacturer, product name and designation, color, expiration date, pot life, curing time, and mixing instructions for multicomponent materials.

B. Store and handle materials in compliance with manufacturer's written instructions to prevent their deterioration or damage due to moisture, high or low temperatures, contaminants, or other causes.

1.07 PROJECT CONDITIONS

A. Environmental Limitations: Do not proceed with installation of joint sealants under the following conditions:

1. When ambient and substrate temperature conditions are outside limits permitted by joint sealant manufacturer or are below 40 degrees F. and less than 100 degrees F.

2. When joint substrates are wet.

B. Joint-Width Conditions: Do not proceed with installation of joint sealants where joint widths are less than those allowed by joint sealant manufacturer for applications indicated.

1.08 WARRANTY

A. Special Warranty:

1. Submit two copies of a written guarantee agreeing to repair or replace joint sealers which fail to perform as air tight and water-tight joints; or fail in joint adhesion, cohesion, abrasion resistance weather resistance, or general durability; or appear to deteriorate or become unserviceable or causing an objectionable appearance resulting from either defective or non-conforming materials and workmanship or in any other manner not clearly specified by submitted manufacturer's data as an inherent quality of the material for the exposure indicated. Provide one-year Warranty.

a. Defects shall include, but are not limited to:

1) Staining from abutting materials or filler.

2) Migrating, bleeding into, or staining abutting materials.

3) Unsightly surface deformation by causes other than movement.

4) Excessive color change, chalking, or dust pick-up.

5) Railing adhesively or cohesively where maximum elongation is less than 25% of designed width of exposed joints.

6) Hardening to more than 25% over specified hardness.

b. Replace sealants which fail because of loss of cohesion or adhesion or do not cure.

PART 2 PRODUCTS

2.01 SEALANTS

A. General:

1. Compatibility: Provide joint sealants, backings, and other related materials that are compatible with one another and with joint substrates under conditions of service and application, as demonstrated by joint-sealant manufacturer, based on testing and field experience.

2. VOC Content of Interior Sealants: Provide sealants and sealant primers for use inside the weatherproofing system that comply with the following limits for VOC content when calculated according to 40 CFR 59, Part 59, Subpart D (EPA Method 24):

   a. Sealants to comply with SCAQMD #1168.

   b. Architectural Sealants: 250 g/L.

   c. Sealant Primers for Nonporous Substrates: 250 g/L.

   d. Sealant Primers for Porous Substrates: 775 g/L.

3. Colors: As shown on Interior Finish Index and Exterior Finish Index, or if not shown, match sealant material to colors of adjacent materials, as approved by Owner's representative, unless indicated otherwise.

4. Elastomeric Sealant Standard: Comply with ASTM C 920 and other requirements indicated for each liquid-applied chemically curing sealant, including those referencing ASTM C 920 classifications for type, grade, class, and uses.

5. Stain-Test-Response Characteristics: Where elastomeric sealants are specified to be nonstaining to porous substrates, provide products that have undergone testing according to ASTM C 1248 and have not stained porous joint substrates indicated for Project.

6. Suitability for Contact with Food: Where elastomeric sealants are indicated for joints that will come in repeated contact with food; provide products that comply with 21 CFR 177.2600.

B. Sanitary Sealant, Interior Use:

1. One component silicone rubber sealant, complying with ASTM C920, Type S, Grade NT, Class 25, and FS-TT-S-001543, Class A. Provide acid cure, nonporous bond type, mildew resistant silicone rubber where both joint faces are metal, glass, plastic, or other non-porous material.

2. Acceptable Products:

   a. "Tremsil 600"; Tremco, Inc., an RPM Company (800-562-2728) VOC: 8 g/L

   b. "Omni-Plus"; Sonneborn Bldg. Products Div., Degussa Building Systems (800-243-6739) VOC: 0 g/L

   c. "786 Mildew Resistant"; Dow Corning Corp. (800-248-2481) VOC: 33 g/L

   d. "Sanitary SCS1700"; General Electric (GE) Silicones (800-255-8886)

   e. "898"; Pecora Corp. (800-523-6688) VOC: 40 g/L

C. Interior Joints not subject to Movement:

1. One part, gun grade, acrylic latex meeting the requirements of ASTM C 834 with 10 year life expectancy.

2. Acceptable Products:

   a. "Tremflex 834"; Tremco, Inc. an RPM Company (800-562-2728) VOC: 11 g/L

   b. "Chem-Calk 600"; Bostik Findley, Inc. (888-603-8558) VOC: 39 g/L

   c. "AC-20"; Pecora Corp. (800-523-6688) 50 g/L

D. Interior Joints subject to Movement: One-part, non-sag acrylic Terpolymer formulation

1. FS-TT-S230 with 20-year life expectancy.

2. Colors: Match sealant material to colors of adjacent materials, as selected by Owner's Representative from manufacturer's standard colors.

3. Acceptable Products:

   a. "Vulkem 921"; Tremco, Inc. , an RPM Company (800-562-2728) VOC: 61 g/L

   b. "Dynatrol I"; Pecora Corp. (800-523-6688) VOC: 100g/L

   c. "Dymonic"; Tremco, Inc., an RPM Company (800-562-2728) VOC: 50 g/L

   d. "NP1"; Sonneborn Bldg. Products Div., Degussa Building Systems (800-243-6739) VOC: 43 g/L

E. Exterior joints greater than 1/2": Two-part non-sag, polyurethane type.

1. ASTM C920 with 20 year life expectancy.

2. Colors: Match sealant material to colors of adjacent materials, as selected by Owner's Representative from manufacturer's standard colors.

3. Acceptable Manufacturers:

   a. "Dymeric 240 or 240FC" ; Tremco, Inc., an RPM Company (800-562-2728)

   b. "Chem-Calk 2641"; Bostik Findley, Inc. (888-603-8558)

   c. "Dynatrol II"; Pecora Corp. (800-523-6688)

   d. "NP2"; Sonneborn Bldg. Products Div., Degussa Building Systems (800-243-6739)

F. Exterior joints less than 1/2": One-part, non-sag acrylic Terpolymer

1. ASTM C920 with 20-year life expectancy.

2. Colors: Match sealant material to colors of adjacent materials, as selected by Owner's Representative from manufacturer's standard colors.

3. Acceptable Manufacturers:

   a. "Vulkem 911"; Tremco, Inc. , an RPM Company (800-562-2728)

   b. "Dynatrol I"; Pecora Corp. (800-523-6688)

   c. "Dymonic"; Tremco, Inc., an RPM Company (800-562-2728)

   d. "NP1"; Sonneborn Bldg. Products Div., Degussa Building Systems (800-243-6739)

G. Exterior, Self-Leveling Horizontal Joints:

1. Multi-Component Pourable Urethane Sealant, Type M, Grade P, Class 25, Use T, M and O, and ASTM C920.

2. Acceptable Products

   a. Typical Joints

      1) "THC 900"; Tremco, Inc., an RPM Company (800-562-2728)

      2) "Vulkem 245"; Tremco, Inc., an RPM Company (800-562-2728)

b. Joints up to 19mm (3/4") maximum

1) "Tremflex SL"; Tremco, Inc., an RPM Company (800-562-2728)

2) "Vulkem 45"; Tremco, Inc., an RPM Company (800-562-2728)

H. Sealant Materials - Glazing:

1. Sealant composition shall be a silicone base, single component, solvent curing, capable of withstanding movement of up to 50 percent of joint width and shore a hardness of 26. Sealant shall conform to, ASTM C920, TTS-S-001543A and TT-S-00230C (COM-NBS).

2. Acceptable Products:

a. "SPECTRUM 2"; Tremco, Inc., an RPM Company (800-562-2728)

b. "SILGLAZE N"; General Electric (GE) Silicones (800-255-8886)

2.02 ACCESSORIES

A. Primer: Non-staining type, recommended by sealant manufacturer to suit application.

B. Joint Cleaner: Non-corrosive and non-staining type, recommended by sealant manufacturer; compatible with joint forming materials.

C. Joint Filler Backer Rod: ASTM D1056; D1565; round, closed cell polyethylene, non-gassing rod sized to produce 25% compression when installed in joint.

1. Approved Manufacturers:

a. " Ethafoam"; Dow Chemical (800-447-4361)

b. "Sonofoam Soft Backer Rod"; Sonneborn Bldg. Products Div., Degussa Building Systems (800-243-6739)

D. Bond Breaker Tape:

1. Approved Manufacturers:

a. Pressure Sensitive 470 or 481 Polyethylene"; 3M Adhesives, Coatings and Sealers Div., (800-328-1687)

b. Approved Substitution

E. Cleaners for Nonporous Surfaces: Provide nonstaining, chemical cleaners of type which are acceptable to manufacturers of sealants and sealant backing materials, which are not harmful to substrates and adjacent nonporous materials, and which do not leave oily residues or otherwise have a detrimental effect on sealant adhesion or in-service performance.

1. Provide cleaner conditioner required for glass and glazed surfaces as recommended by sealant manufacturer.

F. Masking Tape: Provide nonstaining, nonabsorbent type compatible with joint sealants and to surfaces adjacent to joints.

PART 3 EXECUTION

3.01 EXAMINATION

A. Examine joints indicated to receive joint sealers, with Installer present, for compliance with requirements for joint configuration, installation tolerances and other conditions affecting joint sealer performance. Do not proceed with installation of joint sealers until unsatisfactory conditions have been corrected. Beginning of Installation means acceptance of all existing conditions making this Contractor responsible for correcting all unsatisfactory and defective work encountered at his expense.

3.02 PREPARATION

A. Surface Cleaning of Joints: Clean out joints immediately before installing joint sealers to comply with recommendations of joint sealer manufacturers and the following requirements:

1. Remove all foreign material from joint substrates which could interfere with adhesion of joint sealer, including dust; paints, except for permanent, protective coatings tested and approved for sealant adhesion and compatibility by sealant manufacturer; old joint sealers; oil; grease; waterproofing; water repellents; water; surface dirt; and frost.

2. Clean concrete, masonry, and similar porous joint substrate surfaces, by brushing, grinding, blast cleaning, mechanical abrading, or a combination of these methods to produce a clean, sound substrate capable of developing optimum bond with joint sealers. Remove loose particles remaining from above cleaning operations by vacuuming or blowing out joints with oil-free compressed air. Remove laitance and form release agents from concrete.

B. Joint Priming: Prime joint substrates where indicated or where recommended by joint sealer manufacturer based on preconstruction joint sealer-substrate tests or prior experience. Apply primer to comply with joint sealer manufacturer's recommendations. Confine primers to areas of joint sealer bond; do not allow spillage or migration onto adjoining surfaces.

C. Masking Tape: Use masking tape where required to prevent contact of sealant with adjoining surfaces which otherwise would be permanently stained or damaged by such contact or by cleaning methods required to remove sealant smears such as masonry materials. Remove tape immediately after tooling without disturbing joint seal.

3.03 INSTALLATION OF JOINT SEALERS

A. General: Comply with joint sealer manufacturers' printed installation instructions applicable to products and applications indicated, except where more stringent requirements apply. Surfaces and air temperature shall be greater than 30 degrees F and less than 100 degrees F.

B. Joint Priming: Prime joint substrates where recommended in writing by joint sealant manufacturer, based on reconstruction joint-sealant-substrate tests or prior experience. Apply primer to comply with joint sealant manufacturer's written instructions. Confine primers to areas of joint-sealant bond; do not allow spillage or migration onto adjoining surfaces.

1. Ensure that primer fully covers surfaces to which sealant is to adhere.

2. Apply with bristle brush. Do not flood surfaces.

3. Allow primer to dry 30 minutes minimum or as recommended by manufacturer prior to application of backing rod and sealant.

C. Install sealant backings of type indicated to support sealants during application and at position required to produce cross-sectional shapes and depths of installed sealants relative to joint widths that allow optimum sealant movement capability.

1. Do not leave gaps between ends of sealant backings.

2. Do not stretch, twist, puncture, or tear sealant backings.

3. Remove absorbent sealant backings that have become wet before sealant application and replace them with dry materials.

D. Install bond breaker tape between sealants and joint fillers, compression seals, or back of joints where adhesion of sealant to surfaces at back of joints would result in sealant failure. Bond breaker must be used in all conditions where three-sided adhesion may be possible.

E. Install sealants by proven techniques to comply with the following and at the same time backings are installed:

1. Place sealants so they directly contact and fully wet joint substrates.

2. Completely fill recesses provided for each joint configuration.

3. Produce uniform, cross-sectional shapes and depths relative to joint widths that allow optimum sealant movement capability. Needle beads preferred at interior applications.

4. Joint Size:

   a. Depth of joint shall not exceed width of joint.

   b. Minimum depth: ¼"

   c. Maximum depth: ½"

F. Tooling of Nonsag Sealants: Immediately after sealant application and before skinning or curing begins, tool sealants according to requirements specified below to form smooth, uniform beads of configuration indicated; to eliminate air pockets; and to ensure contact and adhesion of sealant with sides of joint.

1. Remove excess sealants from surfaces adjacent to joint.

2. Use tooling agents that are approved in writing by sealant manufacturer and that do not discolor sealants or adjacent surfaces.

   a. Provide concave joint configuration per Figure 5A in ASTM C 1193, unless otherwise indicated.

   b. Provide flush joint configuration, per Figure 5B in ASTM C 1193, where indicated.

   c. Provide recessed joint configuration, per Figure 5C in ASTM C 1193, of recess depth and at locations indicated.

      1) Use masking tape to protect adjacent surfaces of recessed tooled joints.

      2) All joints shall be free of air pockets, foreign embedded matter, ridges, and sags.

3.04 CURE:

A. Cure sealant in compliance with manufacturer's instructions and recommendations to obtain high, early bond strength, internal cohesion strength and surface durability.

3.01 FIELD QUALITY CONTROL

A. Testing Agency: Owner will engage a qualified independent testing agency to oversee installation and to perform tests and inspections and prepare test reports.

B. Inspections: Sealant materials and installation are subject to inspection for compliance with requirements.

3.02 CLEANING:

A. Clean off excess sealants or sealant smears adjacent to joints as work progresses by methods and with cleaning materials approved by manufacturers of joint sealers and of products in which joints occur. Remove masking material immediately following sealant application.

3.03 PROTECTION:

A. Protect joint sealers during and after curing period from contact with contaminating substances or from damage resulting from construction operations or other causes so that they are without deterioration or damage at time of Substantial Performance. If, despite such protection, damage and deterioration occurs, cut out and remove damaged or deteriorated joint sealers immediately and reseal joints with new materials to produce joint sealer installations with repaired areas indistinguishable from original work.

END OF SECTION 07 92 00

SECTION 08 11 13

HOLLOW METAL DOORS AND FRAMES

PART 1 GENERAL

1.01 SUMMARY

A. Section Includes:

1. Exterior Hollow Metal Doors and Frames

B. Related Sections:

1. Section 04 20 00 – Unit Masonry
2. Section 07 92 00 – Joint Sealants
3. Section 08 71 00 - Door Hardware
4. Section 09 90 00 – Painting

1.02 DEFINITIONS

A. Steel Sheet Thicknesses: Thickness dimensions, including those referenced in ANSI A250.8, are minimums as defined in referenced ASTM standards for both uncoated steel sheet and the uncoated base metal of metallic-coated steel sheets.

1.03 REFERENCES

A. SDI - Steel Door Institute Publications SDI 105 through 128

B. ANSI/SDI A250.3 "Test Procedure and Acceptance Criteria for Factory Applied Finish Painted Steel Surfaces for Steel Doors and Frames"

C. ANSI/SDI A250.4 "Test Procedure and Acceptance Criteria for Physical Endurance for Steel Doors, Frames, Frame Anchors and Hardware Reinforcing"

D. ANSI/SDI A250.6 "Recommended Practice for Hardware Reinforcing on Standard Steel Doors and Frames"

E. ANSI/SDI A250.8 - SDI-100 "Recommended Specifications for Standard Steel Doors and Frames"

F. ANSI/SDI A250.10 "Test Procedure and Acceptance Criteria for Prime Painted Steel Surfaces for Steel Doors and Frames"

G. ANSI/SDI A250.11 "Recommended Erection Instructions for Steel Frames (Formerly SDI-105)"

H. ANSI/DHI A115.1G "Installation Guide for Doors and Hardware"

I. ANSI/DHI Publication A115.1G

J. NFPA 80 - Standard for Fire Doors and Windows

K. NFPA 105 "Hot Smoke Test"

L. NFPA 252 “Standard Methods of Fire Tests of Door Assemblies”

M. Underwriter's Laboratories, Inc. (UL) Standards

1. UL Building Materials Directory; Underwriters Laboratories Inc.
2. UL 10B "Standard for Fire Tests of Door Assemblies"
3. UL 10C "Positive Pressure Fire Tests of Door Assemblies"
4. UL 1784 "Air Leakage Tests of Door Assemblies"

5. UL Procedure No. R-3791

N. Warnock Hersey, ETL SEMKO division of Intertek (WHI) Publications:

1. "Certification Listings"

O. National Association of Architectural Metal Manufacturers (NAAMM) Publications:

1. "Metal Finishes Manual for Architectural and Metal Products"

1.04 SUBMITTALS

A. General: Submit the following in accordance with Conditions of Contract and Division 01 Specification Sections:

1. Product Data: Include construction details, material descriptions, core descriptions, label compliance, fire-resistance and temperature-rise ratings, and finishes for each type of steel door and frame specified.

2. Submit Shop Drawings and product data indicating pertinent dimensioning, construction, component connections and locations, anchorage methods and locations, hardware locations and installation details, and the following:

a. Elevations of each door design.

b. Details of doors including vertical and horizontal edge details.

c. Frame details for each frame type including dimensioned profiles.

d. Details and locations of reinforcement and preparations for hardware.

e. Details of each different wall opening condition.

f. Details of anchorages, accessories, joints, and connections.

g. Coordination of glazing frames and stops with glass and glazing requirements.

3. Door Schedule: Submit schedule of doors and frames using same reference numbers for details and openings as those on Contract Drawings.

a. Indicate coordination of glazing frames and stops with glass and glazing requirements.

1.05 QUALITY ASSURANCE

A. Hollow metal doors and frames shall be fabricated in accordance with standards and specifications established by Steel Door Institute, complying with ANSI A250.8-1998 (SDI-100) "Recommended Specifications for Standard Steel Doors and Frames" and as specified.

B. Acoustical qualities: Doors shall have a minimum sound transmission classification of 29 as tested under ASTM E90-61T.

C. Fire-Rated Door Assemblies: Units that comply with NFPA 80 are identical to door and frame assemblies tested for fire-test-response characteristics per ASTM E2074, and are labeled and listed by UL, Warnock Hersey, or another testing and inspecting agency acceptable to authorities having jurisdiction for fire-protection ratings indicated. Test pressure shall be tested in accordance with NFPA 252, or UL 10C to comply with local code requirements.

D. Opening assemblies shall meet the requirements of NFPA 105 Hot Smoke Test.

E. All stairwell doors and other doors as may be shown on the Drawings shall comply with the temperature-rise rating of 450 degrees F. maximum in 30 minutes of fire exposure.

F. Installer Qualifications: Installer experienced in performing work of this section who has specialized in the installation of work similar to that required for this project.

1. Assembly and installation shall be performed by qualified personnel who have successfully completed manufacturer's prefinished steel door frame installation course and have been approved by the manufacturer.

2. Certificate: When requested, submit certificate indicating qualification.

G. Inspection: General Contractor shall provide in writing to Owner an inspection of all steel doors and frames for conformance to specifications. Inspection shall include checking for fit tolerance plumb and level as well as proper hardware and operation.

1. Comply with the requirements of the International Building Code with testing in accordance with UL 10C for positive pressure door test.

a. Test Pressure: After 5 minutes into the test, the neutral pressure level in furnace shall be established at 40 inches or less above the sill.

b. Doors shall be labeled to certify compliance.

c. Provide installation instructions attached to each door in a manner that assures availability to the installer and building official.

H. Fire-Rated, Borrowed Light Frame Assemblies: Assemblies complying with NFPA 80 that are listed and labeled by a testing and inspecting agency acceptable to authorities having jurisdiction, for fire ratings indicated, based on testing according to NFPA 257, or UL 9.

1.06 DELIVERY, STORAGE, AND HANDLING

A. Deliver hollow metal work cardboard wrapped or crated to provide protection during transit and job storage.

1. Provide additional protection to prevent damage to finish of factory-finished doors and frames.

2. Deliver welded frames with two removable spreader bars across bottom of frames.

B. Label each item, before shipping, with metal or plastic tags to show their location, size, door swing, and other pertinent information.

C. Inspect doors and frames on delivery for damage, and notify shipper and supplier if damage is found. Minor damages may be repaired provided refinished items match new work and are acceptable to Architect. Remove and replace damaged items that cannot be repaired as directed.

D. Store doors and frames at building site under cover. Place units on minimum 4-inch-high wood blocking. Avoid using non-vented plastic or canvas shelters that could create a humidity chamber. If door packaging becomes wet, remove cartons immediately. Provide minimum 1/4-inch spaces between stacked doors to permit air circulation.

1.07 PROJECT CONDITIONS

A. Field Measurements: Verify openings by field measurements before fabrication and indicate measurements on Shop Drawings.

B. Maintain environmental conditions (temperature, humidity, and ventilation) recommended by manufacturer for optimum results. Do not install products environmental conditions outside manufacturer's absolute limits.

1.08 COORDINATION

A. Coordinate installation of anchorages for standard steel frames. Furnish setting drawings, templates, and directions for installing anchorages, including sleeves, concrete inserts, anchor bolts, and items with integral anchors, that are to be embedded in concrete or masonry. Deliver such items to Project site in time for installation.

PART 2 PRODUCTS

2.01 DISTRIBUTOR

2.02 MANUFACTURERS

A. Approved Manufacturers:

1. Ceco Door Products, an ASSA ABLOY Group Company (615-661-5030)
2. CURRIES Company, an ASSA ABLOY Group Company (800-377-3948)
3. Republic Builders Products, Division of MAGNATRAX Corporation (800-733-3667)
4. The Steelcraft Door and Frame Products, Division of Ingersoll-Rand (800-930.8585)

2.03 MATERIALS

A. Hot-Rolled Steel Sheets: ASTM A1011 and A568, Commercial Steel (CS), Type B; free of scale, pitting, or surface defects; pickled and oiled.

B. Cold-Rolled Steel Sheets: ASTM A1008 and A568, Commercial Steel (CS), Type B; suitable for exposed applications.

C. Electrolytic Zinc-Coated Steel Sheet: ASTM A591, Commercial Steel (CS), Class B coating; mill phosphatized; suitable for unexposed applications; stretcher-leveled standard of flatness where used for face sheets.

D. Hot dipped zinc coated steel shall be of the alloyed type and comply with ASTM A924 and A653.

E. Supports and Anchors: After fabricating, galvanize units to be built into exterior walls according to ASTM A153, Class B.

F. Inserts, Bolts, and Fasteners: Provide items to be built into exterior walls, hot-dip galvanized according to ASTM A153.

G. Bituminous Coating: Cold-applied asphalt mastic, SSPC-Paint 12, compounded for 15-mil dry film thickness per coat. Provide inert-type noncorrosive compound free of asbestos fibers, sulfur components, and other deleterious impurities.

H. Galvanizing Repair Paint: High zinc dust content paint for regalvanizing welds in galvanized steel, with dry film containing not less than 94 percent zinc dust by weight, and complying with DOD-P-21035 or SSPC Paint 20.

I. Hardware reinforcing on doors and frames shall comply with ANSI/SDI A250.6. The physical performance levels shall be in accordance with ANSI/SDI A250.4.

2.04 HOLLOW METAL FRAMES

A. General:

1. Fabricate steel frame units to comply with ANSI/SDI A250.8 and to be rigid, neat in appearance, and free from defects including warp and buckle. Where practical, fit and assemble units in manufacturer's plant. Clearly identify work that cannot be permanently factory assembled before shipment, to assure proper assembly at Project site. Conceal fastenings, unless otherwise indicated.

B. Location and Type: All metal frames for doors shall be formed of steel to sizes and shapes indicated. Frames shall be fabricated with continuously welded corners unit type construction at joints. Frames shall be furnished with Underwriter's Laboratories label, as required, at the place of manufacturer.

C. Type and Gauges of Metal: Metal for frames shall be cold-rolled or hot-rolled, pickled and oiled, steel sheets with clean, smooth surfaces. Except where other gauges are indicated or specified, frames shall be fabricated from steel, not lighter than the standard Manufacturers Standard Gauge (MSG) as referenced in ANSI A250.8 :

1. Exterior Frames of 16-gauge (0.053-inch) thick steel sheet for:

   a. Door openings wider than 48 inches.

   b. Level 2 steel doors.

   c. Level 3 steel doors.

2. All door frames shall be 0.30 per square foot per side, hot-dipped galvanized or electrolytic zinc-coated steel with a stretcher level degree of flatness.

D. Workmanship and Design: The finished work shall be strong and rigid, neat in appearance, and free from defects. Fabricate members straight and true with corner joints well-formed, in true alignment and fastenings concealed where practicable.

E. Forming Corner Joints: Joints for welded-type frames shall be mitered and continuously arc-welded for full depth and width of frame and trim. All contact edges shall be closed tight and all welds on exposed surfaces dressed smooth and flush.

F. Provision for Hardware: Frames shall be prepared at the factory for the installation of hardware. Comply with applicable requirements in ANSI A250.6 and ANSI A115 Series specifications for door and frame preparation for hardware, unless more stringent requirements are indicated. Welding of hinges to frames will not be permitted. Frames shall be mortised, reinforced, drilled, and tapped to templates to receive all mortised hardware. Provide cover boxes in back of all hardware cut-outs. Lock strikes shall be set out and adjusted to provide clearance for silencers.

   1. Provide preparation for rubber silencers on interior room door frames; three per strike jamb at single doors.

   2. Provide concealed metal reinforcements for hardware as required. The gauges of metal for reinforcement shall be in accordance with the manufacturer's recommendations for the type of hardware and the thickness and width of doors to be hung in the frame, provided that the gauges used are not lighter than those required by Commercial Standard CS-242-62.

      a. Galvanized for exterior doors.

   3. All frames shall have a security anchor system installed on strike jamb consisting of a compression anchor at 3-1/2" from head of door frame and a "Z" type security anchor at 45" above floor.

   4. Provide construction cylinder and replace with final cylinder specified in Section 08 71 00.

   5. Final cylinders, panic devices, removable mullions, electric strikes and card readers by Section 08 71 00.

G. Wall Anchors: Provide metal anchors of shapes and sizes required for the adjoining type of wall construction. Locate anchors on jambs near the top and bottom of each frame and at intermediate points not over 24 inches apart. Galvanized anchors for exterior frames.

   1. Anchor types shall be varied to provide positive fastening to adjacent construction.

   2. Provide UL approved anchors for UL labeled frames. Anchorage of UL label frames shall conform to printed UL test report for door frame manufactured.

H. Plaster Guards: Provide 0.016-inch-thick, steel sheet plaster guards or mortar boxes to close off interior of openings; place at back of hardware cutouts where mortar or other materials might obstruct hardware operation. Required at all door strikes.

I. Floor Anchors: Provide floor clips of not less than 16-gauge steel and fasten to bottom of each jamb member for anchoring frame to floor construction. Clips shall be adjustable and drilled for 3/8" diameter anchor bolts.

J. Shipment: For welded type frames, provide temporary steel spreaders fastened across bottom of frames. Where construction will permit concealment, leave spreaders in place after installation. Otherwise, remove spreaders after frames are set and anchored. In place of spreaders, frames may be strapped together in pairs with heads inverted for bracing during shipment. Before shipping, label each frame with metal or plastic tapes to show their location, size, door swing, and other pertinent information.

2.05 FRAME INSULATION

A. Glass fiber, semi-rigid board, 2" thickness, unfaced, 3 lb. density.

1. Approved Manufacturers:

a. "Type 703" - Owens-Corning Fiberglass Corp (800-438-7465)

b. Substitutions: None accepted

2.06 HOLLOW METAL DOORS

A. General:

1. Fabricate steel door units to comply with ANSI/SDI A250.8 and to be rigid, neat in appearance, and free from defects including warp and buckle. Where practical, fit and assemble units in manufacturer's plant. Clearly identify work that cannot be permanently factory assembled before shipment, to assure proper assembly at Project site.

B. Hollow Metal Doors:

1. Interior Doors: Provide doors complying with requirements indicated below by referencing ANSI/SDI 250.8 for level and model and ANSI/SDI A250.4 for physical-endurance level.

2. Exterior Doors: Provide doors complying with requirements indicated below by referencing ANSI/SDI A250.8 for level and model and ANSI/SDI A250.4 for physical-endurance level:

a. Flush Door:

1) Thickness: 1-3/4"

2) Model: "L Series"; Steelcraft Manufacturing Company, or approved substitution by other listed manufacturers.

3) Level 3, Extra Heavy Duty, 16-gage, and Physical Performance Level B (Extra Heavy Duty), Model 2 (Seamless).

b. Exterior doors shall be fabricated as thermal insulating door and frame assemblies and tested in accordance with ASTM C236 or ASTM C976 on fully operable door assemblies. Provide thermal-rated assemblies with U-factor of 0.24 or better. Hot-dipped galvanized or electrolytic zinc-coated steel with a stretcher level degree of flatness.

c. All exterior swing-out doors shall have the top and bottoms closed to eliminate moisture penetration. Door tops shall not have holes or openings.

C. Door Fabrication:

1. Fabricate doors and frames in accordance with ANSI/SDI A250.8.

2. Workmanship: The finished work shall be rigid, neat in appearance, and free from defects; form molding members straight and true with joints coped or mitered, well formed and in true alignment. All welded joints on exposed surfaces shall be dressed smooth so they are invisible after finishing.

3. Door Sizes and Clearances: Doors shall be of type, sizes, and design indicated. The clearances for doors shall be 1/8" at jambs and heads and 3/4" at bottom, unless

indicated or specified otherwise. Clearances at meeting edges of pairs of doors shall be 1/4" (1/8" on fire doors).

a. Clearances for Fire-Rated Doors: As required by ANSI/NFPA 80.

4. Exterior Doors: Provide weep-hole openings in bottom of exterior doors to permit moisture to escape. Seal joints in top edges of doors against water penetration.

5. Provisions for Hardware: Mortise, reinforce, drill, and tap doors at factory to receive all mortise-type hardware. Provide reinforcing only for doors to receive surface-applied hardware, except push plates and kick plates; drilling and tapping for surface-applied hardware will be done in the field. Provide metal reinforcing plates for surface-applied hardware as required. The gauges of metal for reinforcing plates shall comply with manufacturer's recommendation for the type of hardware used and the size and thickness of doors, provided that the minimum requirements are as follows:

a. Hinge Reinforcement - 3/16 Inch

b. Strike Reinforcement - 11 Gauge

c. Closers and Bracket Reinforcement - 12 Gauge

d. Mortise Covers - 26 Gauge

e. The gauges used shall not be lighter than those required by Commercial Standard CS 242-62.

6. Glazing Preparation:

a. Doors indicated to have glass shall have non-removable glazing stops on the exterior sides of the openings and removable or snap-on type stops on the inside of the openings.

b. Provide manufacturer's vision lites of sizes and locations as shown on Drawings, recessed into the door face similar to "Dezigner Trim" by Steelcraft, or approved substitution by listed manufacturers.

c. Stops shall be UL approved for UL labeled doors.

D. Doors with labels shall carry Underwriters label on the door and on the frame. They shall be constructed to meet Procedure No. R-3791 and R-3821, as listed by Underwriters Laboratories.

2.07 FINISHES

A. General: Comply with NAAMM's "Metal Finishes Manual for Architectural and Metal Products" for recommendations for applying and designating finishes.

1. Finish steel doors and frames after assembly.

B. Factory Prime Coating for Field Painted Finish: Unless specified otherwise, provide manufacturer's standard, factory-applied coat of rust-inhibiting primer complying with ANSI/SDI A250.10 for acceptance criteria.

1. Clean and chemically treat metal surfaces to assure maximum paint adherence. Follow with a dip or spray coat of lead-free, rust-inhibitive metallic oxide, zinc chromate, or synthetic resin primer on all exposed surfaces. Finished surfaces shall be smooth and free from irregularities and rough spots.

PART 3 EXECUTION

3.01 EXAMINATION

A. Examine substrates, areas, and conditions, with Installer present, for compliance with requirements for installation tolerances and other conditions affecting performance of standard steel doors and frames.

1. Examine roughing-in for embedded and built-in anchors to verify actual locations of standard steel frame connections before frame installation.

3.02 GENERAL

A. Fabricate and install hollow metal units and their accessories in strict accordance with these Specifications and manufacturer's data.

B. Hardware: For installation see Division 08, "Door Hardware" Section of these Specifications.

3.03 PLACING FRAMES

A. Comply with the provisions of the "Steel Door Institute" 105, unless otherwise indicated.

B. Set frames accurately in position, plumbed, aligned, and braced until permanent anchors are set.

1. Except for frames located in existing walls or partitions, place frames before construction of enclosing walls and ceilings.

C. Frame Insulation: Install insulation in frames of gypsum board partitions. Cut insulation to full width of frame throat and friction fit within the jamb and head. Pack solid around perimeter of the frame.

D. Anchor bottom of frames to floors with expansion bolts, or with power fasteners. Build wall anchors into walls or secure to adjoining construction as indicated or specified. Where frames require ceiling struts or other structural overhead bracing, they shall be anchored securely to ceiling or structural framing above as indicated and specified.

1. In masonry construction, provide at least three wall anchors per jamb; install adjacent to hinge location on hinge jamb and at corresponding heights on strike jamb. Acceptable anchors include masonry wire anchors and masonry T-shaped anchors.

2. In metal-stud partitions, provide at least three wall anchors per jamb; install adjacent to hinge location on hinge jamb and at corresponding heights on strike jamb. Attach wall anchors to studs with screws.

3. For openings 90 inches or more in height, install an additional anchor at hinge and strike jambs.

E. Install fire-rated frames in accordance with NFPA Standard No. 80.

3.04 DOOR INSTALLATION

A. Door Installation: Comply with ANSI A250.8. Fit hollow metal doors accurately in their respective frames within clearances specified in ANSI A250.8. Shim as necessary to comply with SDI 122 and ANSI/DHI A115.1G.

B. Place fire-rated doors with clearances as specified in NFPA Standard No. 80.

C. Smoke-Control Doors: Install to comply with NFPA 105.

3.05 ADJUSTMENT

A. Check and re-adjust operating finish hardware items in hollow metal work just prior to final inspection.

B. Remove and replace defective work including doors or frames which are warped, bowed, or otherwise damaged.

C. Finished Doors: Refinish or replace doors damaged during installation.

D. Protect doors as recommended by door manufacturer to ensure that doors will be without damage or deterioration at time of Substantial Completion.

3.06 TOUCH-UP

A. Prime-Coat Touchup: Immediately after installation, sand smooth any rusted or damaged areas of prime coat and apply touch up of compatible air-drying primer.

B. Repairs: Fill surface depressions with metallic paste filler, allow to cure, and sand flush for invisible joint with adjacent metal surfaces. Sand rust areas and apply touch-up paint using air drying paints compatible with shop finish. Damaged doors or frames that cannot be repaired shall be replaced.

3.07 CLEANING:

A. Protection Removal: Immediately before final inspection, remove protective wrappings from doors and frames.

B. Upon completion, metal surfaces of doors and frames that are completely factory finished shall be thoroughly cleaned and touched-up as recommended by the door manufacturer.

END OF SECTION 08 11 13

SECTION 08 31 00
ACCESS DOORS AND PANELS

PART 1 GENERAL

1.01 SUMMARY

A. Section Includes:

1. Access Doors and Frames of the Following Types:

a. Wall Access Doors

b. Moisture Resistant Access Doors

c. Sprinkler System Access Doors

B. Related Sections:

1. Section 04 20 00 – Unit Masonry
2. Section 07 92 00 – Joint Sealants
3. Section 09 29 00 - Gypsum Board Assemblies
4. Section 09 90 00 - Painting
5. Division 21, 22 and 23 Sections for coordination of access to valves and other concealed items.

1.02 SUBMITTALS

A. General: Submit the following in accordance with Conditions of Contract and Division 01 Specification Sections:

1. Shop Drawings and Samples:

a. Submit copies of Shop Drawings of all items specified herein to Architect for approval. Obtain approval of Drawings prior to proceeding with manufacturing. Shop Drawings shall indicate: Elevations of each door type; Details of each frame type; Location in the building for each item; Conditions at openings with various wall thicknesses and material; Typical and special details of construction; Methods of assembling sections; Locations and installation requirements for hardware; Size, shape, and thickness of materials; Joints and connections.

1.03 QUALITY ASSURANCE

A. Access doors shall be fabricated in accordance with standards and specifications established by Steel Door Institute.

B. Provide UL Label on each fire rated access door.

C. Access panels shall be flush with finished wall or ceilings, except where panels are located in acoustic tile or paneling, the door shall be recessed to receive adjacent finish material.

D. Access panel finishes shall be coordinated with the finish treatment of the area.

1.04 DELIVERY, STORAGE, AND HANDLING

A. Deliver access doors cartooned or crated to provide protection during transit and job storage.

PART 2 PRODUCTS

2.01 SHOP PAINTING:

A. Apply a primed finish to all ferrous metal surfaces furnished under this Section. Clean and chemically treat metal surfaces to assure maximum paint adherence. Follow with a dip or spray coat of rust-inhibitive metallic oxide, zinc chromate, or synthetic resin primer on all exposed surfaces. Finished surfaces shall be smooth and free from irregularities and rough spots. Each coat of paint shall be separately baked or oven dried. The time and temperature for drying shall be in accordance with manufacturer's recommendations for developing maximum hardness and resistance to abrasion.

2.02 ACCESS UNITS

A. Wall Access Doors (Non-rated):

1. Approved Manufacturers:

a. "ME Series", Milcore (800-624-8624)

b. "TM Series"; J.L. Industries (800-554-6077)

c. "DSC-214M"; Karp Associates, Inc. (800-888-4212)

d. "N-Series", Nystrom Building Products (800-317-8770)

2. Door Size: Select from manufacturer's standard sizes to suit required opening.

3. Designed for flush installation in wall construction. Construct of metal with concealed continuous hinge, having recessed screwdriver latch, size as indicated.

B. Wall Access Doors (Fire-Rated):

1. Approved Manufacturers:

a. "UFR Series", Milcore (800-624-8624)

b. "FD Series"; J.L. Industries (800-554-6077)

c. "KRP-150FR"; Karp Associates, Inc. (800-888-4212)

d. "I-Series". Nystrom Building Products (800-317-8770)

2. Door Size: Select from manufacturer's standard sizes to suit required opening.

3. Provide B label 1-1/2 hour wall access door with recessed screwdriver latch.

C. Moisture Resistant Access Doors (Non-rated):

1. Approved Manufacturers:

a. Larsen "L-MPSS" stainless steel frame and "L-MPSS" stainless steel door, by Larsen, with continuous, offset and concealed hinge, security fastener. (800-527-7367)

D. Sprinkler System Access Doors (Fire-rated)

1. Performance Criteria:

a. UL B (1-1/2 hr.) rated with automatic closer, UL rated anchors for construction in which door will be installed, and lockset with knob released keyed as directed by Owner.

2. Approved Manufacturers:

a. Milcor LP (800-528-1411)

b. Karp Associates, Inc.. (718-784-2105)

c. Williams Brothers Corporation of America (309-796-2371)

2.03 FINISHES

A. Base Metal Protection: Factory prime coat units with electrostatic baked on electrostatic powder. Prime exposed edges with coat of white rust-inhibitive paint.

B. For fire-rated access doors, furnish units with ceramic fiberboard panel insert, attach to outside face of door, ready for field painting.

PART 3 EXECUTION

3.01 GENERAL

A. Verify rough openings for door and frame are correctly sized and located.

B. Beginning of installation means acceptance of existing conditions.

3.02 INSTALLATION

A. Install units and their accessories in accordance with final Shop Drawings, manufacturer's data, and as herein specified.

B. Install frame plumb and level in wall and ceiling openings. Position to provide convenient access to concealed work requiring access. Secure rigidly in place.

3.03 ADJUSTMENT

A. Check and readjust operating finish hardware items in work just prior to final inspection.

B. Remove and replace defective work including doors or frames which are warped, bowed, or otherwise damaged.

3.04 TOUCH-UP

A. Immediately after erection of work, sand smooth any rusted or damaged areas of prime coat and touch-up of compatible air drying primer.

3.05 PROTECTION:

A. Protect doors and frames from damage during transportation and at the job site; store at the site under cover on wood blocking or on suitable floors. After installation, protect doors and frames from damage during subsequent construction activities. Damaged work will be rejected and shall be replaced with new work. Factory enameled finished work shall be shipped in cartons or other suitable containers.

3.06 CLEANING:

A. Upon completion, metal surfaces of doors and frames that are completely factory finished shall be thoroughly cleaned and touched-up as recommended by the door manufacturer.

END OF SECTION 08 31 00

SECTION 08 71 00
DOOR HARDWARE

PART 1 GENERAL

1.01 SUMMARY

A. Section Includes:

1. All the finish hardware including all screws, bolts, and other devices required to complete the work.
2. Lock cylinders for locks specified in other Sections.
3. Miscellaneous hardware
4. Hardware furnished for shop or factory installation on doors and frames.
5. Keys and Keying

B. Related Sections:

1. Section 08 11 13 - Steel Doors and Frames
2. Section 09 90 00 – Painting for field painting of prime coated removable mullions to match door frames.
3. Division 26 Sections - Coordination with items requiring electrical connections.

1.02 REFERENCES

A. Perform all work in accordance with the following:

1. American National Standards Institute (ANSI) Publications:
   a. ICC/ANSI A117.1-2003 “Accessible and Useable Buildings and Facilities”
   b. ANSI/BHMA A 156.1 "Butts & Hinges"
   c. ANSI/BHMA A 156.2 "Bored and Preassembled Locks and Latches"
   d. ANSI/BHMA A 156.3 "Exit Devices"
   e. ANSI/BHMA A 156.4 "Door Controls - Closers"
   f. ANSI/BHMA A 156.5 "Auxiliary Locks and Associated Products"
   g. ANSI/BHMA A 156.6 "Architectural Door Trim"
   h. ANSI/BHMA A 156.13 "Mortise Locks & Latches"
   i. ANSI/BHMA A 156.17 "Self-Closing Hinges & Pivots"
   j. ANSI/BHMA A 156.18 "Materials & Finishes"
   k. ANSI/BHMA A 156.21 "Thresholds"
   l. ANSI/BHMA A 156.22 "Gasketing and Edge Seal Systems"
   m. ANSI/BHMA A 156.23 "Electromagnetic Locks"
   n. ANSI/BHMA A 156.26 "Continuous Hinges"
   o. ANSI/BHMA A 156.28 "Keying Systems"
2. ANSI/DHI Publications:
   a. ANSI/DHI A115.1G "Installation Guide for Doors and Hardware"
3. Builders Hardware Manufacturers Association (BHMA)

4. Door and Hardware Institute (DHI) Publications:

   a. DHI-WDHS-3 "Recommended Hardware Locations for Wood Flush Doors"

   b. "Recommended Locations for Builders Hardware for Standard Steel Doors and Frames"

5. National Fire Protection Association (NFPA) Publications:

   a. 80 "Standard for Fire Doors, Fire Windows"

   b. 101 "Life Safety Code"

   c. 252 "Standard Methods of Fire Tests of Door Assemblies"

6. Underwriter's Laboratories, Inc. (UL) Standards

   a. 10B "Standard for Fire Tests of Door Assemblies"

   b. 10C "Positive Pressure Fire Tests of Door Assemblies"

   c. 305 "Panic Hardware"

7. Window and Door Manufacturers Association (WDMA)

B. Regulatory Requirements:

1. Conform to NFPA 80, and other applicable codes for requirements applicable to fire rated doors and frames.

2. Products Requiring Electrical Connection: Listed and classified by Underwriters' Laboratories, Inc., and acceptable to the public authority as suitable for the purpose specified and indicated.

3. Conform to requirements of ADA (Americans with Disabilities Act)

4. Accessibility: Hardware for doors used by the disabled shall comply with all state and local codes which shall supersede this Section. [Notify the Architect] [Owner's Representative] of conflicts between regulations and this specification prior to providing hardware.

1.03 SUBMITTALS

A. General: Submit the following in accordance with Conditions of Contract and Division 01 Specification Sections:

1. Product data including manufacturers' technical product data for each item of door hardware, installation instructions, maintenance of operating parts and finish, and other information necessary to show compliance with requirements.

2. Final hardware schedule coordinated with doors, frames, and related work to ensure proper size, thickness, hand, function, and finish of door hardware.

   a. Final Hardware Schedule Content: Based on hardware indicated, organize schedule into "hardware sets" indicating complete designations of every item required for each door or opening. Include the following information:

      1) Type, style, function, size, and finish of each hardware item.

      2) Name and manufacturer of each item.

      3) Fastenings and other pertinent information.

      4) Location of each hardware set cross referenced to indications on Drawings both on floor plans and in door and frame schedule. Submittals shall use the same designations for door and hardware numbers as shown on the Drawings.

      5) Explanation of all abbreviations, symbols, and codes contained in schedule.

6) Mounting locations for hardware.

7) Door and frame sizes and materials.

8) Keying information.

3. Submittal Sequence: Submit final schedule at earliest possible date particularly where acceptance of hardware schedule must precede fabrication of other work that is critical in the Project construction schedule. Include with schedule the product data, samples, Shop Drawings of other work affected by door hardware, and other information essential to the coordinated review of schedule.

4. Keying Schedule: Submit separate detailed schedule indicating clearly how the Owner's final instructions on keying of locks has been fulfilled.

5. Templates for doors, frames, and other work specified to be factory-prepared for the installation of door hardware. Check Shop Drawings of other work to confirm that adequate provisions are made for locating and installing door hardware to comply with indicated requirements.

1.04 QUALITY ASSURANCE

A. Single Source Responsibility: Obtain each type of hardware (latch and lock sets, hinges, closers, etc.) from a single manufacturer.

B. Supplier Qualifications: A recognized architectural door hardware supplier, with warehousing facilities in the Project's vicinity, that has a record of successful in-service performance for supplying door hardware similar in quantity, type, and quality to that indicated for this Project and that employs an experienced Architectural Hardware Consultant (AHC) who is available at reasonable times during the course of the work, for consultation about Project's hardware requirements.

C. Require supplier to meet with Owner to finalize keying requirements and to obtain final instructions in writing.

D. Fire-rated Openings: Provide door hardware for fire-rated openings that complies with NFPA 80, based on testing per NFPA 252, and requirements of authorities having jurisdiction. Provide only items of door hardware that are listed and are identical to products tested by Underwriter's Laboratories, Inc. (UL), Warnock Hersey, ETL SEMKO division of Intertek (WHI), FM Global (FMG), or other testing and inspecting organization acceptable to authorities having jurisdiction for use on types and sizes of doors indicated in compliance with requirements of fire-rated door and door frame labels.

1. Comply with the requirements of the International Building Code with testing in accordance with UL 10C for positive pressure door test.

a. Test Pressure: After 5 minutes into the test, the neutral pressure level in furnace shall be established at 40 inches or less above the sill.

b. Doors shall be labeled to certify compliance.

c. Provide installation instructions attached to each door in a manner that assures availability to the installer and building official.

E. Inspection: General Contractor shall provide in writing to Architect an inspection of all doors and frames for conformance to specifications. Inspection shall include checking for fit tolerance plumb and level as well as proper hardware and operation.

1.05 MAINTENANCE

A. Maintenance Tools and Instructions: Furnish a complete set of specialized tools and maintenance instructions as needed for Owner's continued adjustment, maintenance, and removal and replacement of door hardware.

1.06 CERTIFICATIONS

A. Conform to governing Building Codes for requirements applicable to the work specified herein.

B. Conform to NFPA 101 with regard to requirements for fire-rated doors and frames.

C. Hardware for doors in accessible locations as defined by the Americans with Disability Act (ADA) shall comply with all state and local codes which shall supersede this section. The Architect shall be notified of any conflicts between regulations and the specifications prior to the purchase and installation of any hardware.

1.07 SCHEDULING

A. Reinforcement for all hardware for metal doors and frames shall be installed at the factory and be made to template and furnished with machine screws. The face of locks shall be beveled to match the bevel edge of metal doors. All hardware for the metal doors shall be ordered as soon as possible after the Contract is awarded.

1.08 DELIVERY, STORAGE AND HANDLING

A. Legibly mark and label each package, indicating item and location for which it is intended. Each marking shall correspond to the number shown on the approved hardware schedule. Each package shall contain all the required screws, bolts and fasteners necessary for installation of each hardware item.

1. Packaging of door hardware is responsibility of supplier. As material is received by hardware supplier from various manufacturers, sort and repackage in containers clearly marked with appropriate hardware set number to match set numbers of approved hardware schedule. Two or more identical sets may be packed in same container.

2. Include basic installation instructions with each item or package.

B. Construction keys: Tagged and plainly marked on face of envelope with the key change number, door designation and all other required information and mailed directly to the Owner.

C. Permanent keys: Identified by lock manufacturer and opening to which they apply. Lock manufacturer shall place each set of keys into an envelope and label same with door numbers for rooms or areas. Mark boxes of keys with project name and location and ship Change Keys, Master Keys, and Grandmaster Keys via prepaid registered mail to Owner.

1.09 SPARE MATERIALS

A. Refer to Section 01 78 43.

1.10 WARRANTY

A. Furnish a written guarantee which shall cover the periods stated below from and after the completion of the building and its acceptance by the Owner.

B. For a period of one (1) year after final acceptance by the Owner. Hardware failing to comply with warranty shall be removed and replaced with new material including labor at no cost to Owner.

C. Provide the following special warranties starting from the date of substantial completion:

1. Door Locksets: Two (2) years.

2. Computer Systems: One (1) year.

3. Card Readers and other electrical equipment: Two (2) years.

PART 2 PRODUCTS

2.01 MANUFACTURERS

A. Hardware manufacturers are specified for each hardware item to establish a standard of quality and minimum functional requirements. In the hardware schedule at the end of this Section, product model numbers are used as part of this description to assist in identifying individual items.

B. Items of a particular hardware category, i.e., locksets, closers, hinges shall be of the same manufacturer.

C. Approved Manufacturers and Abbreviations:

1.	AR	Adams Rite Manufacturing Co., An ASSA ABLOY Group Company (800-872-3267)	
2.	DE	Detex Corp.	(800-729-3839)
3.	DC	Door Controls International	(800-742-3634)
4.	DO	Dor-O-Matics, an IR Ingersoll-Rand Business	(800-243-4830)
5.	FA	Folger Adam EDC, An ASSA ABLOY Group Company	(800-260-9001)
6.	HA	Hager Companies	(800-255-3590)
7.	HE	HES, An ASSA ABLOY Group Company	(800-626-7590)
8.	IV	Ives, an IR Ingersoll-Rand Business	(877-424-8494)
9.	LC	LCN Closers, an IR Ingersoll-Rand Business	(800-526-2400)
10.	LO	Locknetics by Schlage, an IR Ingersoll-Rand Business	(860-584-9158)
11.	MK	McKinney Products Company, An ASSA ABLOY Group Company	(800-346-7707)
12.	NO	Norton Door Controls, An ASSA ABLOY Group Company	(800-438-1951)
13.	PE	Pemko Manufacturing Company	(800-283-9988)
14.	RIX	Rixson Specialty Door Controls An ASSA ABLOY Group Company	(800-457-5670)
15.	RO	Rockwood Manufacturing Co.	(800-458-2424)
16.	SA	Sargent Manufacturing Co., An ASSA ABLOY Group Company	(800-727-5477)
17.	SC	Schlage, an IR Ingersoll-Rand Business	(800-847-1864)
18.	ST	Stanley Hardware	(860-225-5111)
19.	TR	Trimco/BBW (Quality)	(323-262-4191)
20.	VD	Von Duprin, an IR Ingersoll-Rand Business	(317-613-8944)
21.	VI	VingCard, An ASSA ABLOY Group Company	(800-225-8464)
22.	YA	Yale Commercial Locks & Hardware, An ASSA ABLOY Group Company	(800-438-1951)

2.02 MATERIALS

A. Screws and fasteners:

1. All required screws shall be supplied as necessary for securing finish hardware in the appropriate manner. Thru-bolts shall be supplied for exit devices and door closers where required by code and the appropriate blocking or reinforcing is not present in the door to preclude their use.

B. Hanging devices:

1. Hinges:

a. Hinges shall conform to ANSI A156.1 and have the number of knuckles as specified, oil-impregnated bearings as specified with NRP (non-removable pin) feature, at all exterior reverse bevel doors. Unless otherwise scheduled, supply one (1) hinge for every 30" of door height. Hinges shall be a minimum of 4 1/2" high and 4" wide; heavy weight hinges (.180) shall be supplied at all doors where specified.

1) Specified Manufacturer: McKinney
2) Approved Substitutes: Bommer, Hager, Stanley

2. Electric Hinges:

a. Electric hinges shall be provided with molex standardized plug connectors to accommodate up to twelve (12) wires. Plug connectors shall plug directly into molex through-door wiring harnesses for connection to electric locking devices and power supplies. Provide sufficient number of concealed wires to accommodate electric function of specified hardware. Provide a mortar guard for each electric hinge specified.

1) Specified Manufacturer: McKinney QC Series

2) Approved Substitutes: NONE

3. Continuous Geared Hinges:

a. All hinges to be non-handed and completely reversible. Hinge line to be available in concealed flush mount with or without inset, full surface and half surface types as specified in the hardware sets. All hinges to be made of extruded 6060 T6 aluminum alloy with polyacetal thrust bearings, anodized after cutouts are made for bearings. All concealed hinges to be fire-rated for 20, 45 and 90 minutes when incorporated into proper door and frame labeled installations, without necessitating the use of fusible-link pins. All concealed hinges to be available in standard, heavy, and extra heavy duty weights; all full surface and half surface hinges in standard and heavy duty weights as specified in the hardware sets. All hinges to be factory cut for door size.

1) Specified Manufacturers: McKinney

2) Approved Manufacturers: Bommer, Pemko, Select

C. Flush Bolts and Accessories:

1. All manual and automatic flush bolts to be furnished as specified.

a. Specified Manufacturer: McKinney

b. Approved Substitutes: Quality, Rockwood, Trimco

D. Cylinders and Keying:

1. Cylinders:

a. Provide cylinders and keys key to existing masterkey system.

1) Specified Manufacturer: Schlage

2. Keying:

   a. All locks and cylinders shall be construction master-keyed. All locks and cylinders to be master-keyed or grandmaster-keyed as directed by the owner. The factory shall key all locks and cylinders. Furnish the following key amounts:

      1) Two (2) change keys per lock

      2) Three (3) grand master keys

      3) Six (6) master keys per master level

      4) Three (3) construction/temporary keys

   b. Master keys and all high-security or restricted keyway blanks shall be sealed in tamper-proof packaged boxes when shipped from the factory.

E. Locking Devices:

1. Mortise Locksets:

   a. All locksets shall be ANSI 156.13 Series 1000, Grade 1 Certified. All functions shall be manufactured in a single sized case formed from 12 gauge steel minimum. The lockset shall have a field-adjustable, beveled armored front, with a .125" minimum thickness and shall be reversible without opening the lock body. The lockset shall be 2 3/4" backset with a one-piece 3/4" anti-friction stainless steel latchbolt. The deadbolt shall be a full 1" throw made of stainless steel and have 2 hardened steel roller inserts. All strikes shall be non-handed with a curved lip. To insure proper alignment, all trim, shall be thru-bolted and fully interchangeable between rose and escutcheon designs and shall be the product of one manufacturer.

      1) Specified Manufacturer: Sargent 8200 Series

      2) Approved Substitutes: Best 40H Series, Corbin Russwin ML2000 Series, Schlage L9000 Series, Yale 8800 Series

2. Lockset Strikes:

   a. Strikes shall be non-handed and available with curved lip, full lip or ASA type strikes as required. Provide strikes with lip-length required to accommodate jamb and/or trim detail and projection.

F. Electric Strikes:

1. Standard Strikes:

   a. All standard electric strikes shall meet BHMA standard 501, grade 1 and be UL Listed for Burglary Resistance, category 1034. Strikes shall be all stainless steel construction for corrosion resistance, strength and durability. Strikes shall have been tested to withstand a forcing strength of a minimum 2400 lbs. before releasing and perform with a minimum of one million cycles of operation. Strikes shall be 24VDC fail-secure unless otherwise specified. Provide an in-line power controller with all electric strikes.

      1) Specified Manufacturers: HES 1006 Series
      2) Approved Substitutes: Folger Adams 742 Series

2. Surface Mounted Strikes:

   a. All surface mounted electric strikes shall meet BHMA standard 501, grade 1 and be UL Listed for Burglary Resistance, category 1034. Strikes shall have two heavy-duty, stainless steel locking mechanisms operating independently to provide tamper resistance. Optional latchbolt and latchbolt strike monitoring that indicates position of

the latchbolt and locked condition of the strike shall be available. Strikes shall have been tested for a minimum of 500,000 operating cycles. Provide an in-line power controller with all electric strikes.

1) Specified Manufacturers: HES 9600/9500 Genesis

2) Approved Substitutes: NONE

G. Exit Devices:

1. Conventional Devices – Push Rail

a. All exit devices shall be ANSI A156.3, Grade 1 Certified and shall be listed by Underwriters Laboratories and bear the UL label for life safety in full compliance with NFPA 80 and NFPA 101. Mounting rails shall be formed from a solid single piece of stainless steel, brass or bronze no less than 0.072" thick. Push rails shall be constructed of 0.062" thick material. Painted or anodized aluminum shall not be considered heavy duty and is not acceptable. Lever trim shall be available in finishes and designs to match that of the specified locksets.

1) Specified Manufacturer: Sargent 80 Series

2) Approved Substitutes: Corbin Russwin ED4000/ED5000 Series, Von Duprin 98 Series, Yale 7100/7200 Series

2. Electrified Devices:

3. Electrified exit devices shall conform to all traditional exit device standards as specified above. All power requirements for exit devices used must utilize a continuous circuit electric hinge for clean design and no visible means of interrupting power to device.

4. Options for delayed egress exit devices to be specified in the hardware sets. Devices to conform to NFPA 101 - Special Locking Arrangements for delayed egress. Nuisance delay to be available as standard for either zero (0) or two (2) seconds. Internal latchbolt monitoring, and a standard 10-second delay for "Authorized Entry" to be standard features on every device. Delayed egress feature to be available throughout all styles and sizes of exit devices including: Panic and Fire rated Rim, Wide and Narrow Stile, Mortise, Surface Vertical Rod, and Concealed Vertical Rod.

5. All exit devices, both fire labeled and non-labeled devices, requiring electric dogging shall be held in the "dogged" or retracted position. All exit devices with electric latch retraction shall provide for a remote means of unlocking for momentary or maintained periods of time.

6. Exit devices with electrified trim shall be fail-secure unless otherwise specified.

7. Where specified exit devices shall be provided with a switch to monitor push rail or signal remote location and latchbolt monitoring.

a. Specified Manufacturers: Sargent

b. Approved Manufacturers: Corbin Russwin, Von Duprin, Yale

H. Door Closers:

1. Surface Mounted Closers – Heavy Duty:

a. All door closers shall be ANSI 156.4, Grade 1 Certified. All closers shall have aluminum alloy bodies, forged steel arms, and separate valves for adjusting backcheck, closing and latching cycles and adjustable spring to provide up to 50% increase in spring power. Closers shall be furnished with parallel arms mounting on all doors opening into corridors or other public spaces and shall be mounted to

permit 180 degrees door swing wherever wall conditions permit. Closers shall not be installed on exterior or corridor side of doors; where possible install closers on door for optimum aesthetics.

1) Specified Manufacturer: Norton 7500 Series

2) Approved Substitutes: Corbin Russwin DC6000, Sargent 351 Series, Yale 4400 Series

I. Door Trim and Protective Plates:

1. Kick plates shall be .050 gauges and two (2) inches less full width of door, or as specified. Push plates, pull plates, door pulls and miscellaneous door trim shall be as shown in the hardware schedule.

a. Specified Manufacturer: Rockwood

b. Approved Substitutes: McKinney, Trimco

J. Door Stops and Holders:

1. Wall Mounted Door Stops:

a. Where a door is indicated on the plans to strike flush against a wall, wall bumpers shall be provided. Provide convex or concave design as indicated.

1) Specified Manufacturer: Rockwood

2) Approved Substitutes: McKinney, Trimco

2. Overhead Stops/Holders

a. Where specified, overhead stops/holders as shown in the hardware sets are to be provided. Track, slide, arm and jamb bracket shall be constructed of extruded bronze and shock absorber spring shall be of heavy tempered steel. Overhead stops shall be of non-handed design.

1) Specified Manufacturers: Rixson 1/2/9/10 Series

2) Approved Substitutes: Sargent 690/1530/590/1540 Series

3. Magnetic Hold-Opens:

a. Magnetic door holders shall meet or exceed ANSI A156.15 and be UL listed 228 for Door Closer and Holders, with or without integral smoke detectors. Holding force shall be 25 to 40 pounds and shall be fail-safe. Pushpin release that eliminates residual magnetism shall be standard. Provide magnetic hold-opens with triple-voltage coil that can receive 12 VDC, 24 VAC/DC, or 120VAC; or coordinate required voltage with electrical.

1) Specified Manufacturers: Rixson

2) Approved Substitutes: HES, Sargent

K. Gasketing and Thresholds

1. Provide continuous weatherseal on exterior doors and smoke, light, or sound seals on interior doors where indicated or scheduled. Provide intumescent seals as required to meet UL10C Standard for Positive Pressure Fire Tests of Door Assemblies. Provide only those units where resilient or flexible seal strip is easily replaceable and readily available from stocks maintained by manufacturer.

2. Provide threshold units not less than 4" wide, formed to accommodate change in floor elevation where indicated, fabricated to accommodate door hardware and to fit door frames. All threshold units shall comply with the Americans with Disabilities Act (ADA).

   a. Specified Manufacturers: Pemko

   b. Approved Substitutes: McKinney, Reese, Zero

L. Silencers

1. Furnish rubber door silencers all hollow metal frames; two (2) per pair and three (3) per single door frame.

M. Electronic Products and Accessories

1. Integrated Proximity Card Key Locks: Wiegand compatible electronic access control ANSI Grade 1 mortise lockset with integrated proximity card reader included in the trim. Lock consists of a hard wired, solenoid driven unit for locking/unlocking of the lever handle trim, door status switch monitoring, latchbolt monitoring and request-to-exit signaling. Latchbolt monitoring and door position switch act in conjunction reporting Door in Frame (DPS) and Door Latched (Door closed and latched) conditions. Card reader is HID based technology programmable via third party networked access control software without requirements for adding proprietary lock panel interface boards or modules.

   a. Specified Manufacturers: Sargent Manufacturing - Harmony H1 Series.

   b. Approved Manufacturers: Corbin Russwin Hardware - Access 600 Series.

2. In-line Power Controller

   a. Where specified, electrified products shall be supplied with an in-line power controller that enables the hardware to operate from 12 to 32 volts. On board safety features shall include an in-line fuse to protect the hardware and host system from any possible reverse current surges. The controller shall regulate current to provide continuous duty operation without the typical head build up.

      1) Specified Manufacturers: HES 2005M Smart-Pac II

      2) Approved Manufacturers: Folger Adams 2005M Smart-Pac II

3. Power Supplies

   a. Power supplies shall furnish regulated 24VDC and shall be UL class 2 listed. LED's shall monitor zone status (voltage/no voltage) and slide switches shall be provided to connect or disconnect the load from power; 1, 4 or 8 separate output circuit breakers shall be provided to divide the load. Power supplies shall have the internal capability of charging optional 24VDC sealed lead acid batteries in addition to operating the DC load. Power supplies shall be supplied complete requiring only 120VAC to the fused input and shall be supplied in an enclosure. Power supplies shall be provided with emergency release terminals that allow the release of all devices upon activation of the fire alarm system.

      1) Specified Manufacturer: Securitron BPS

      2) Approved Substitutes: Folger Adams

2.03 FINISHES

A. The designations used in schedules and elsewhere to indicate hardware finishes are those listed in ANSI/BHMA A156.18 or traditional U.S. finishes shown by certain manufacturers for their products.

B. Provide quality of finish, including thickness of plating or coating (if any), composition, hardness, and other qualities complying with manufacturer's standards, but in no case less than specified by referenced standards for the applicable units of hardware.

C. Where specified hardware shall have an antimicrobial coating which permanently suppresses the growth of bacteria, algae, fungus, mold and mildew applied. The finish shall control the spread and growth of bacteria, mold and mildew and shall be FDA listed for use in medical and food preparation equipment.

2.04 MANUFACTURERS

A. Hardware manufacturers are specified for each hardware item to establish a standard of quality and minimum functional requirements. In the hardware schedule at the end of this Section, product model numbers are used as part of this description to assist in identifying individual items.

B. Items of a particular hardware category, i.e., locksets, closers, hinges shall be of the same manufacturer.

C. Approved Manufacturers and Abbreviations:

1.	AR	Adams Rite Manufacturing Co., An ASSA ABLOY Group Company	(800-872-3267)
2.	BO	Bommer Industries, Inc.	(800-334-1654)
3.	CO	Corbin Russwin	(800-543-3658)
4.	DE	Detex Corp.	(800-729-3839)
5.	DO	Dor-O-Matics, an IR Ingersoll-Rand Business	(800-243-4830)
6.	FA	Folger Adam EDC, An ASSA ABLOY Group Company	(800-260-9001)
7.	HA	Hager Companies	(800-255-3590)
8.	HE	HES, An ASSA ABLOY Group Company	(800-626-7590)
9.	IV	Ives, an IR Ingersoll-Rand Business	(877-424-8494)
10.	LC	LCN Closers, an IR Ingersoll-Rand Business	(800-526-2400)
11.	MK	McKinney Products Company, An ASSA ABLOY Group Company	(800-346-7707)
12.	NO	Norton Door Controls, An ASSA ABLOY Group Company	(800-438-1951)
13.	PE	Pemko Manufacturing Company	(800-283-9988)
14.	RE	Reese Enterprises, Inc.	(800-824-3348)
15.	RF	Rixson Specialty Door Controls An ASSA ABLOY Group Company	(800-457-5670)
16.	RO	Rockwood Manufacturing Co.	(800-458-2424)
17.	SA	Sargent Manufacturing Co., An ASSA ABLOY Group Company	(800-727-5477)
18.	SU	Securitron Maglock Corp. An ASSA ABLOY Group Company	(800-624-5625)
19.	SC	Schlage, an IR Ingersoll-Rand Business	(800-847-1864)

20.	ST	Stanley Hardware	(860-225-5111)
21.	TRM	Trimco/BBW (Quality)	(323-262-4191)
22.	VDI	Von Duprin, an IR Ingersoll-Rand Business	(317-613-8944)
23.	VI	VingCard, An ASSA ABLOY Group Company	(800-225-8464)
24.	YA	Yale Commercial Locks & Hardware, An ASSA ABLOY Group Company	(800-438-1951)
25.	ZE	Zero International, Inc.	(800-635-5335)

2.05 GENERAL REQUIREMENTS

A. Butt Hinges: Unless otherwise scheduled, shall be five-knuckle, full mortise template, ball bearing type with non-rising loose pin, flat button tip. Exterior hinges, and certain others as scheduled, shall have non-removable pins by use of set screw in the barrel. These are identified in the schedule as "NRP".

1. Sizes:

a. Size of hinges to be 3-1/2" x 3-1/2" for 1-3/8" doors

b. Size of hinges to be 4-1/2" x 4-1/2" for 1-3/4" doors up to 36" wide; 37" to 48 hinges to be 5" x 4-1/2" unless listed otherwise in hardware sets.

B. Standard Locks and Latches: Locks shall utilize standard cutouts to facilitate interchange without further mortising. Strikes for locks and latches shall have only the minimum lip projection required to protect trim. Lock and trim shall conform to ANSI/BHMA A156.2

C. Exit Devices: Shall be listed under "Panic Hardware" in accident equipment lists of Underwriters Laboratories. Where labeled fire doors are used as exits, they shall be equipped with labeled "Fire Exit Hardware". Exit devices shall conform to ANSI/BHMA A156.3

D. Thresholds at all door usable by the handicapped shall not exceed 1/2" in height above finished floor.

E. Door Closers: Except where other device for automatically closing and controlling the action of swing doors is noted, shall be hydraulic type of rack and pinion design with working parts enclosed in a cast iron or aluminum case. For doors subject to positive or negative HVAC pressures, closer size shall be adjusted accordingly. All Closers shall **NOT** be fastened with Through Bolts through doors. All Wood Doors with closers to be provided with 5" wood top block.

1. Materials and Features:

a. ANSI/BHMA A156.4, Grade 1

b. ICC/ANSI A117.1-2003

c. UL. listed. Provide closers for fire rated openings in compliance with NFPA 80, NFPA 101, and local building codes.

d. Provide closers with full covers

e. Extreme temperature fluid (temperature range from -30 degrees F to 120 degrees F.)

f. Provide delayed action closers where required by code

g. Provide sex nuts and bolts (SNB) or thru bolts (TB) on all labeled mineral core doors.

h. Finish: Provide factory painted or powder finish on exposed metal to match hardware, unless indicated otherwise.

i. Mounting: Hinge face mounting, unless otherwise indicated. Do not mount closers on exterior of building.

j. Size and mount units indicated or, if not indicated, to comply with manufacturer's recommendations for exposure conditions. Reinforce substrate as recommended.

k. Closers to be installed to allow direction of door swing as shown on Drawings and as required to meet field conditions.

l. Door pull force:

1) Exterior Doors: Maximum 8.5 lbs.

2) Interior Doors: Maximum 5.0 lbs.

m. Provide mounting or drop plates as required by job conditions.

2.06 MISCELLANEOUS REQUIREMENTS

A. The hardware shall be the proper kind for its required use and shall fit its intended location. Should any hardware, as specified, fail to meet the intended requirements or require modification to suit the intended location, this matter, or any other necessary advance information, shall be brought to the attention of the Architect for correction or decision in ample time to avoid delay in the manufacture and delivery of hardware.

B. The finish hardware listed herein shall not be construed as necessarily being a complete hardware schedule, but shall be considered as an indication of the hardware requirements desired by the Architect. It shall be the Contractor's responsibility to examine the Drawings and door schedules and provide all necessary or additional hardware as required but not scheduled herein. Such items of hardware shall be of the same type, quality, and quantity as that scheduled for similar doors or similar purposes.

C. In the accompanying hardware list, catalog numbers used are those of specific manufacturers, used to establish a minimum standard of quality and requirements as to type, weight, mechanical construction and operation to which hardware shall conform. That list indicates manufacturers on which catalog numbers are based, as well as acceptable equivalent manufacturers.

D. Proposals shall be based on specified (base or acceptable equivalent) brands. If the Contractor wishes to submit other brands as equivalent to those specified, they shall enter such proposed substitutions separately from their basic proposal. For each item proposed, they shall enter the amount to be added to or deducted from his base bid in the event the proposed substitution is accepted by the Owner's representative.

PART 3 EXECUTION

3.01 INSPECTION

A. Verify that doors and frames are ready to receive work and dimensions, are as indicated on Shop Drawings, and as instructed by the manufacturer.

B. Beginning of installation means acceptance of existing conditions.

3.02 INSTALLATION

A. Install each hardware item in compliance with manufacturer's instructions and recommendations. Wherever cutting and fitting is required to install hardware onto or into surfaces which are later to be painted or finished in another way, install each item completely and then remove and store in a secure place during the finish application. After completion of the finished, reinstall each item. Do not install surface-mounted items until finishes have been completed on the substrate.

B. Conform to ICC/ANSI A117.1-2003 for positioning requirements for the Disabled.

C. All door closers shall be installed out of public sight wherever possible.

3.03 FASTENINGS

A. Suitable size, quantity, and material with finish to match the hardware.

B. Machine screws for attaching hardware to metal.

C. Self-tapping screws for attaching kickplate to hollow metal or wood mineral core doors.

D. Full thread type screws for attaching butt hinges to wood or mineral core doors.

E. Sex bolts and sleeves for attaching surface closers or arm to mineral core doors.

F. Non-ferrous or corrosion resistant steel fasteners for items exposed to weather.

3.04 HARDWARE LOCATIONS

A. Hardware mounting heights shall conform to the following unless otherwise indicated on the drawings.

1. Hinges:	Top - 5" from head to top of hinge leaf. Bottom - 10" from bottom of hinge to finished floor. Intermediates. Intermediates - Equal distance between top and bottom hinges (Maximum 3'-0")
2. Locks/Latches:	38" from finish floor to center of lock/latch.
3. Deadlocks/Deadbolts:	48" from finished floor to center of cylinder.
4. Doorpulls, Pushplates Pushbars:	38" from finish floor to centerline. All other doors - 45" from finish floor to centerline.
5. Exit Device Crossbars:	38" from finish floor to center of crossbar.
6. Electromagnetic Hold-Open:	Set wall mounted type 72" from finish floor to centerline. Wall mounted templates shall be issued by hardware supplier.

3.05 HARDWARE INSTALLATION

A. Coordination:

1. Fit and adjust hardware in accordance with manufacturer's packaged instructions.

2. Coordinate installation with all trades, millwork, finish hardware, door frames and electrical.

B. Sound and Smoke Seals:

1. Install adhesive seals per manufacturer's instructions. Pre-cut pieces to fit before installing. Do not install as one continuous piece. Install jamb pieces first and header piece last. Position jamb pieces on the door frame rabbet 1/16" from the header rabbet to allow for header piece clearance. Install header piece on the header rabbet with ends overlapping and fitting above jamb piece.

2. Install adhesive seals on astragal of double doors.

3.06 ADJUSTING

A. Adjustments:

1. Weatherstripping and sound/smoke seals shall not interfere with operation of doors and shall be adjusted accordingly.

2. Secure door bottom in strict accordance with manufacturer's printed instructions and as required to seal door to threshold.

3. Door seals to provide intended functions. Replace seals which do not perform.

4. Adjust door so that lockset can be easily opened with a key/card key without binding between the latchbolt and strike. Doors too tight (or too loose) will not be accepted.

5. Clearances between door and frame, at jambs and head: No greater than 1/8" +/- 1/16".

3.07 PROTECTION

A. Reinstall wrappings furnished by manufacturer for protecting items such as levers, handles and pulls.

B. Do not remove manufacturer's protective covering of flat items such as kickplates and push plates until just prior to final acceptance of the building.

3.08 CLEANING

A. After installation, clean metal surfaces on both interior and exterior of all mortar, plaster, paint and other contaminants. After cleaning, protect work against damage.

3.09 FINAL ADJUSTMENT

A. Whenever hardware is installed more than one month prior to acceptance or occupancy of a space or area, return during the week prior to acceptance or occupancy and make a final check and adjustment of all hardware items in such space or area.

B. At the completion of the project, manufacturers' suppliers or representatives shall inspect their hardware and make any corrections required due to errors or improper installation.

PART 4 HARDWARE SCHEDULE

Hardware Set 01
Opening 161A Exterior from Utility Storage 3'0 7'0 1-3/4" HMD x HMF

Each opening to have;

3	Hinges	TA2314 4-1/2" x 4-1/2" NRP		32D	McKinney
1	Storeroom Lock	8204 LNL LC		26D	Sargent
1	Classroom Deadbolt	4877 LC		26D	Sargent
2	Cylinders	as required	26D		
1	Closer HO Cush	CPS7500T		AL	Norton
1	Kick Plate	K1050 10" x 2" LTDW		32D	Rockwood
1	Threshold	272	AL	Pemko	
1	Sweep	3452	ANB	Pemko	
1	Gasket	S88C		Pemko	
1	Drip Cap	346C		Pemko	

Hardware Set 02
Opening 161B Exterior from Family Changing 3'0 7'0 1-3/4" HMD x HMF
Opening 161C Exterior from Family Changing 3'0 7'0 1-3/4" HMD x HMF

Each opening to have;

3	Hinges	TA2314 4-1/2" x 4-1/2" NRP		32D	McKinney
1	Privacy Lock	8204 LNL LC	26D	Sargent	
1	Classroom Deadbolt	4877 LC		26D	Sargent

1	Cylinders	as required	26D		
1	Closer HO Cush	CPS7500T		AL	Norton
1	Kick Plate	K1050 10" x 2" LTDW		32D	Rockwood
1	Threshold	272	AL	Pemko	
1	Sweep	3452	ANB	Pemko	
1	Gasket	S88C		Pemko	
1	Drip Cap	346C		Pemko	

END OF SECTION 08 71 00

SECTION 09 21 16
GYPSUM BOARD ASSEMBLIES

PART 1 GENERAL

1.01 SUMMARY

A. Section Includes:

1. Non-Load Bearing Interior Steel Framing
   a. Interior Partitions
   b. Suspended and Furred Ceilings
2. Gypsum Board, Screw-Attached to Steel Framing and Furring Members, and Required Accessories
3. Glass-Mat, Mold & Mildew Resistant Interior Wall Panel
4. Patching and repairing existing Gypsum Board Walls or Ceilings.

B. Related Sections:

1. Section 01 35 16 – Alteration Project Procedures
2. Section 01 73 29 – Cutting and Patching.
3. Section 02 41 19 – Selective Structure Demolition
4. Section 07 20 00 - Thermal Protection for Sound Attenuation Insulation
5. Section 07 84 00 - Firestopping
6. Section 07 92 00 – Joint Sealants
7. Section 09 51 23 - Acoustical Tile Ceilings
8. Section 09 90 00 - Painting

1.02 REFERENCES

A. American Iron and Steel Institute (AISI) Publications:

1. "AISI's Code of Standard Practice for Cold-Formed Steel Structural Framing"
2. "North American Specification for the Design of Cold Formed Steel Structural Members"

B. ASTM International (ASTM) Publications:

1. A510 "Standard Specification for General Requirements for Wire Rods and Coarse Round Wire, Carbon Steel"
2. A653 "Standard Specification for Steel Sheet, Zinc-Coated (Galvanized) or Zinc-Iron Alloy-Coated (Galvannealed) by the Hot-Dip Process"
3. A641 "Standard Specification for Zinc-Coated (Galvanized) Carbon Steel Wire"
4. A1003 - 08 "Standard Specification for Steel Sheet, Carbon, Metallic- and Nonmetallic-Coated for Cold-Formed Framing Members"
5. C475 "Standard Specification for Joint Compound and Joint Tape for Finishing Gypsum Board"
6. C514 "Standard Specification for Nails for the Application of Gypsum Board"
7. C645 "Standard Specification for Nonstructural Steel Framing Members"
8. C754 "Standard Specification for Installation of Steel Framing Members to Receive Screw-Attached Gypsum Panel Products"

9. C834 "Standard Specification for Latex Sealants"

10. C840 "Standard Specification for Application and Finishing of Gypsum Board"

11. C919 "Standard Practice for Use of Sealants in Acoustical Applications"

12. C954 "Standard Specification for Steel Drill Screws for the Application of Gypsum Panel Products or Metal Plaster Bases to Steel Studs from 0.033 in. to 0.112 in. in Thickness"

13. C1002 "Standard Specification for Steel Self-Piercing Tapping Screws for the Application of Gypsum Panel Products or Metal Plaster Bases to Wood Studs or Steel Studs"

14. C1047 "Standard Specification for Accessories for Gypsum Wallboard and Gypsum Veneer Base"

15. C1177 "Standard Specification for Glass Mat Gypsum Substrate for Use as Sheathing"

16. C1178 "Standard Specification for Glass Mat Water-Resistant Gypsum Backing Panel"

17. C1396 "Standard Specification for Gypsum Board"

18. D3273 "Standard Test Method for Resistance to Growth of Mold on the Surface of Interior Coatings in an Environmental Chamber"

19. E84 "Standard Test Method for Surface Burning Characteristics of Building Materials"

20. E90 "Standard Test Method for Laboratory Measurement of Airborne Sound Transmission Loss of Building Partitions and Elements"

21. E119 "Standard Test Methods for Fire Tests of Building Construction and Materials"

22. E413 "Classification for Rating Sound Insulation"

23. E488 "Standard Test Methods for Strength of Anchors in Concrete and Masonry Elements"

24. E736 "Standard Test Method for Cohesion/Adhesion of Sprayed Fire-Resistive Materials Applied to Structural Members"

25. E 759 "Standard Test Method for Effect of Deflection on Sprayed Fire-Resistive Material Applied to Structural Members"

26. E761 "Standard Test Method for Compressive Strength of Sprayed Fire-Resistive Material Applied to Structural Members"

C. FM Global (FMG):

1. "Approval Guide, Building Products"

D. Gypsum Association (GA) Publications:

1. GA-214 "Recommended Levels of Gypsum Board Finish"

2. GA-216 "Application and Finishing Of Gypsum Panel Products"

3. GA-505 for definitions of terms for gypsum board assemblies not defined in this Section

4. GA-600 "Fire Resistance Design Manual"

E. ICC Evaluation Service Reports:

1. ES-AC86 "Cold-formed Steel Framing Members---Interior Nonload-bearing Wall Assemblies"

F. Underwriters Laboratory (UL):

1. "Fire Resistance Directory"

2. 723 "Test for Surface Burning Characteristics of Building Materials"

G. United States Gypsum Co. (USG):

1. "Gypsum Construction Handbook"

1.03 DEFINITIONS

A. Gypsum Board Construction Terminology: Refer to ASTM C1396 and GA-505 for definitions of terms for gypsum board construction not otherwise defined in this Section or other referenced standards.

1.04 SUBMITTALS

A. General: Submit the following in accordance with Conditions of Contract and Division 01 Specification Sections:

1. Submit Product Data for each type of product specified.

a. Asbestos Content: Provide written certification that materials contain no asbestos of any type of mixture of types occurring naturally as impurities as determined by polarized light microscopy test per Appendix A of 40 CFR 763 will be utilized on this Project.

1.05 QUALITY ASSURANCE

A. Fire-Resistance Ratings: Where indicated, provide materials and construction which are identical to those of assemblies whose fire-resistance rating has been determined per ASTM E119 by a testing and inspecting organization acceptable to authorities having jurisdiction.

1. Provide fire-resistance-rated assemblies identical to those indicated by reference to GA 600 "Fire Resistance Design Manual", to design designations in U.L. "Fire Resistance Directory", to FMG's "Approval Guide, Building Products", or in listing of other testing and agencies acceptable to authorities having jurisdiction.

2. Products used in the assembly shall carry a classification label from the testing laboratory.

B. Single-Source Responsibility for Steel Framing: Obtain steel framing members for gypsum board assemblies from a single manufacturer, unless otherwise indicated.

C. Single-Source Responsibility for Panel Products: Obtain each type of gypsum board and other panel products from a single manufacturer.

D. Single-Source Responsibility for Finishing Materials: Obtain finishing materials from either the same manufacturer that supplies gypsum board and other panel products or from a manufacturer acceptable to gypsum board manufacturer.

E. Sound Transmission Characteristics: For gypsum board assemblies indicated to have STC ratings, provide materials and construction identical to those of assemblies whose STC ratings were determined per ASTM E90 and classified per ASTM E413 by a qualified independent testing agency.

1.06 DELIVERY, STORAGE, AND HANDLING

A. Deliver materials in original packages, containers, or bundles bearing brand name and identification of manufacturer or supplier.

B. Store materials inside under cover and keep them dry and protected against damage from weather, direct sunlight, surface contamination, corrosion, construction traffic, and other causes. Neatly stack gypsum panels flat to prevent sagging.

C. Handle gypsum board to prevent damage to edges, ends, and surfaces. Do not bend or otherwise damage metal corner beads and trim.

1.07 PROJECT CONDITIONS

A. Environmental Conditions, Gypsum Board, General: Establish and maintain environmental conditions for application and finishing gypsum board to comply with ASTM C840 and with gypsum board manufacturer's recommendations.

B. Room Temperatures: For nonadhesive attachment of gypsum board to framing, maintain not less than 40 deg. F. For adhesive attachment and finishing of gypsum board maintain not less than 50 deg. F. for 48 hours prior to application and continuously thereafter until drying is complete. Do not exceed 95 deg. F when using temporary heat sources.

C. Ventilate building spaces to remove water not required for drying joint treatment materials. Avoid drafts during dry, hot weather to prevent materials from drying too rapidly.

1. Provide adequate ventilation to permit drying during curing.

D. Environmental Conditions, Textured Finish: Comply with manufacturers recommendations as to environmental conditions under which coating can be applied.

1. Maintain temperature at not less than 55 degrees F during installation.

PART 2 PRODUCTS

2.01 NON-LOAD-BEARING STEEL FRAMING FOR INTERIOR PARTITIONS

A. Approved Manufacturers:

1. Clark Western Building Systems (800-543-7140)
2. Dietrich Metal Framing, Inc., a Worthington Industries Company (412-281-2805)
3. Marino\Ware (800-627-4661)

B. General: Provide steel framing members complying with the following requirements:

1. Component Sizes and Spacings: As indicated but not less than that required to comply with ASTM C754 and ASTM C840 requirements that apply to framing installation under the following maximum deflection and lateral loading conditions:

a. Maximum Deflection: L/240 at 5 lb. per sq. ft.

b. Protective Coating: G40 (Z120) hot-dipped galvanized steel, complying with ASTM A1003 or ASTM A653, or equivalent corrosion resistant coating. A40 gavannealed products are not acceptable.

C. Steel Studs and Runners: Steel studs and runners or dimpled steel studs and runners complying with ASTM C645 and with the following requirements for minimum thickness of base (uncoated) metal and for depth:

1. Steel Studs and Runners:

a. Cold-formed with flange edges of studs bent back 90 deg and doubled over to form 3/16-inch-wide minimum lip (return).

b. Flange Length: 1-1/4 inches.

c. Thickness: Minimum base metal (uncoated) thickness shall be 0.033, unless otherwise indicated.

1) Framing members certified by manufacturer to be third-party tested in accordance with ICC-ES AC86 and meeting ASTM C645, Section 9.2. Minimum base metal (uncoated) thickness shall be 0.220, unless otherwise indicated

2. Depth: 3-5/8 inches and 6 inches, unless otherwise indicated.

3. Runners (Tracks):

a. Depth: Track web to match stud web size.

b. Thickness: Track thickness to match wall stud thickness, unless otherwise indicated.

D. Furring:

1. Steel Rigid Furring Channels: ASTM C645, hat shaped, depth and minimum base metal thickness (uncoated) shall be 0.0179 inch, unless otherwise indicated. Depth of 1-1/2 inches.

2. Steel Resilient Furring Channels: Manufacturer's standard product designed to reduce sound transmission from steel sheet complying with ASTM A653 or ASTM A568 to form 1/2 inch deep x 2-5/8 inch channel with single or double-leg configuration. Minimum 25 gauge, pre-punched for screw attachment.

E. Deflection Track: Manufacturer's standard top runner designed to prevent cracking of gypsum board applied to interior partitions resulting from deflection of the structure above fabricated from steel sheet complying with ASTM A653 or ASTM A568. Thickness as indicated for studs, and width to accommodated depth of studs.

F. Fasteners for Metal Framing: Provide fasteners of type, material, size, corrosion resistance, holding power, and other properties required to fasten steel framing and furring members securely to substrates involved; complying with the recommendations of gypsum board manufacturers for applications indicated.

2.02 STEEL FRAMING COMPONENTS FOR SUSPENDED AND FURRED CEILINGS

A. Manufacturers of Grid Suspension Systems

1. Approved Manufacturers:

a. Armstrong World Industries, Inc. (800-442-4212)

b. Chicago Metalic Corp. (800-323-7164)

c. USG Interiors, Inc. (800-950-3839)

B. General: Provide components complying with ASTM C754 for conditions indicated.

C. Grid Suspension System for Interior Ceilings: ASTM C645, manufacturer's standard direct-hung grid suspension system composed of main beams and cross furring members that interlock to form a modular supporting network.

D. Wire for Hangers and Ties: ASTM A641, Class 1 Zinc Coating, Soft Temper, minimum 0.162 inch diameter.

E. Hanger Rods: ASTM A510 mild steel and zinc coated or protected with rust-inhibitive paint. Diameter as indicated.

F. Channels: Cold-formed steel, 0.0538-inch-minimum thickness of base (uncoated) metal and 1/2-inch-wide flanges, and as follows:

1. Carrying Channels: 2 inches deep, 590 lb. per 1,000 feet, unless otherwise indicated.

2. Furring Channels: 3/4 inch deep, 300 lb. per 1,000 feet, unless otherwise indicated.

3. Finish: G-60 hot-dip galvanized coating per ASTM A653 for framing for toilet rooms and where indicated.

a. Rust-inhibitive paint, unless otherwise indicated.

G. Steel Studs for Furring Channels: ASTM C645, with flange edges bent back 90 deg. and doubled over to form 3/16-inch minimum lip (return), minimum thickness of base (uncoated) metal and minimum depth as follows:

1. Thickness: Minimum 0.0179 inch, unless otherwise indicated.

2. Depth: 1-5/8" inch, unless otherwise indicated.

3. Protective Coating: ASTM A653 or ASTM A1003, G40 Hot-Dip Galvanized Coating.

H. Steel Rigid Furring Channels: ASTM C645, hat-shaped, depth of 7/8 inch, and minimum thickness of base (uncoated) metal as follows:

1. Thickness: Minimum 0.0179 inch, unless otherwise indicated.
2. Protective Coating: G40 Hot-Dip Galvanized Coating per ASTM A653 or ASTM A1003.

I. Steel Resilient Furring Channels: Manufacturer's standard product designed to reduce sound transmission, fabricated from steel sheet complying with ASTM A653 or ASTM A568 to form 1/2-inch-deep channel of the following configuration:

1. Single-Leg Configuration: Asymmetric-shaped channel with face connected to a single flange by a single-slotted leg (web) or hat-shaped channel, with 1-1/2-inch-wide face connected to flanges by double-slotted or expanded-metal legs (webs).

J. Cast-in-Place and Post-installed Anchors in Concrete: Anchors of type indicated below, fabricated from corrosion-resistant materials, with holes or loops for attaching hanger wires, and with capability to sustain, without failure, a load equal to 5 times that imposed by ceiling construction, as determined by testing according to ASTM E488 conducted by a qualified independent testing agency.

1. Post-installed expansion anchor

2.03 GYPSUM BOARD PRODUCTS

A. General: Provide gypsum board of types indicated in maximum lengths available that will minimize joints in each area and correspond with support system indicated.

1. Thickness: Provide gypsum board in widths of 48 inches and thickness indicated or, if not otherwise indicated, in 5/8 inch thickness to comply with ASTM C840 for application system and support spacing indicated.

B. Gypsum Wallboard: ASTM C1396 and as follows:

1. Approved Manufacturers:

a. G-P Gypsum Corporation (800-225-6119)

b. National Gypsum Company (800-628-4662)

c. United States Gypsum Co. (800-950-3839)

d. CertainTeed Corporation, a subsidiary of Saint-Gobain (800-233-8990)

e. Lafarge North America Inc. (866-349-7786)

f. Temple-Inland Forest Products Corp. - Gypsum Products (800-231-6060)

2. Core: 5/8 inch, Type X

3. Long Edges: Tapered.

4. Type: Sag-resistant Type for Ceiling Surfaces

5. Edges: Tapered and featured (rounded or beveled) for prefilling.

C. Glass-Mat, Mold & Mildew Resistant Interior Wall and Ceiling Panel

1. Approved Manufacturers:

a. "DensArmor Plus Interior Guard"; G-P Gypsum Corporation (800-225-6119)

b. "GreenGlass Interior Gypsum Board"; Temple-Inland Forest Products Corp. - Gypsum Products (800-231-6060)

2. ASTM C1177, enhanced mold & mildew resistant gypsum core wallboard. Conforming to the physical properties of ASTM C1396 and ASTM C1177 on Glass mat back. Rating of 10 "No Mold Growth" as tested for 4 weeks according to ASTM D3273.

a. Surfaces to be painted: Coated inorganic glass mat-faced back and paper-faced front.

3. Core: 5/8 inch, Type X

4. Long Edges: Tapered.

2.04 TRIM ACCESSORIES

A. Accessories for Interior Installation: Corner beads, edge trim, and control joints complying with ASTM C1047 and requirements indicated below:

1. Approved Manufacturer

a. "Paper Faced Metal Bead and Trim Series" United States Gypsum Co (800-950-3839)

b. "Goldline Platinum Tape-On Drywall Trims"; Dietrich Metal Framing, Inc., a Worthington Industries Company (412-281-2805)

c. No Substitutions

2. Material: Formed metal combined with paper, with metal complying with the following requirement:

a. Sheet steel zinc-coated by hot-dip process.

3. Shapes indicated below by reference to Fig. 1 designations in ASTM C1047:

a. Cornerbead on outside corners, unless otherwise indicated.

b. LC-bead (J-Bead) with both face and back flanges; face flange formed to receive joint compound. Use LC-beads at exposed panel edges unless otherwise indicated.

c. L-bead with face flange only; face flange formed to receive joint compound. Use L-bead where indicated.

d. U-bead with face and back flanges; face flange formed to be left without application of joint compound. Use U-bead where indicated.

e. One-piece control joint formed with V-shaped slot, with removable strip covering slot opening. Use where indicated.

2.05 JOINT TREATMENT MATERIALS

A. General: Provide materials complying with ASTM C475, ASTM C840, and recommendations of manufacturer of both gypsum board and joint treatment materials for the application indicated.

B. Joint Tape: ASTM C475, 2-inch nominal width, paper reinforcing tape, unless otherwise indicated.

C. Joint Compound for Interior Gypsum Board

1. General: For each coat use formulation that is compatible with other compounds applied on previous or for successive coats. Products shall not contain asbestos.

2. Setting-Type Joint Compounds for Gypsum Board: Factory-packaged, job-mixed, chemical-hardening powder products formulated for uses indicated.

a. Approved Manufacturers:

1) "SHEETROCK Brand DURABOND Setting-Type Joint Compounds"; United States Gypsum Co. (800-950-3839)

2) "SHEETROCK Brand Easy Sand Lightweight Setting-Type Joint Compounds"; United States Gypsum Co. (800-950-3839)

3) "ToughRock Setting Compounds"; G-P Gypsum Corporation (800-225-6119)

4) "ToughRock Sandable Setting Compounds"; G-P Gypsum Corporation (800-225-6119)

5) "Lafarge Rapid Joint Lightweight Setting Compound"; Lafarge North America Inc. (866-349-7786)

6) "ProForm Brand Sta-Smooth Joint Compound"; National Gypsum Company. (800-628-4662)

7) "ProForm Brand Sta-Smooth Lite Joint Compound"; National Gypsum Company. (800-628-4662)

3. Drying Type Joint Compound: Vinyl type factory pre-mixed compound; formulated for uses indicated.

   a. Approved Manufacturers:

      1) "SHEETROCK Brand All-Purpose Joint Compound"; United States Gypsum Co. (800-950-3839)

      2) "SHEETROCK Brand Plus 3 Lightweight All-Purpose Joint Compound"; United States Gypsum Co. (800-950-3839)

      3) "ToughRock Ready-Mix All-Purpose Joint Compound"; G-P Gypsum Corporation (800-225-6119)

      4) "ToughRock Lightweight Joint Compound"; G-P Gypsum Corporation (800-225-6119)

      5) "Lafarge Rapid Coat All Purpose Compound"; Lafarge North America Inc. (866-349-7786)

      6) "ProForm Brand All Purpose Joint Compound"; National Gypsum Company. (800-628-4662)

      7) "ProForm Lite Ready Mix Joint Compound"; National Gypsum Company. (800-628-4662)

4. Joint Compound for Paper Faced Gypsum Board:

   a. Prefilling: At open joints and damaged surface areas, use setting-type taping compound.

   b. Embedding and First Coat: For embedding tape and first coat on joints, fasteners, and trim flanges, use setting-type topping, or non-lightweight drying-type all purpose compound.

   c. Use setting-type compound for installing paper-faced metal trim accessories.

   d. Fill Coat: For second coat, use setting-type, sandable topping or drying-type all purpose compound.

   e. Finish Coat: For third coat, use setting-type, sandable topping or drying-type all purpose compound.

   f. Skim Coat: For final coat of Level 5 finish, use setting-type, sandable topping or drying-type all purpose compound.

5. Joint Compound for Glass-Mat Faced Gypsum Board:

   a. Prefilling: At open joints and damaged surface areas, use setting-type taping compound.

      1) Apply water resistant tile adhesive to all cut or exposed edges, utility holes, and joints including those at wall intersections when installing moisture-resistant gypsum board panels.

   b. Embedding and First Coat: For embedding tape and first coat on joints, fasteners, and trim flanges, use setting-type taping compound.

   c. Use setting-type compound for installing paper-faced metal trim accessories.

   d. Fill Coat: For second coat, use setting-type, sandable topping compound.

e. Finish Coat: For third coat, use setting-type, sandable topping compound.

f. Skim Coat: For final coat of Level 5 finish, use setting-type, sandable topping compound.

2.06 ACOUSTICAL SEALANT

A. Approved Manufacturers:

1. Acoustical Sealant for Exposed and Concealed Joints:

a. Approved Manufacturers:

1) "AC-20 FTR Acoustical and Insulation Sealant"; Pecora Corp. (800-523-6688)

2) "SHEETROCK Acoustical Sealant"; United States Gypsum Co. (800-950-3839)

3) "QuietSeal"; Serious Materials Inc. (800-797-8159)

B. Latex Acoustical Sealant: Manufacturer's standard nonsag, paintable, nonstaining latex sealant complying with ASTM C834 and the following requirements:

1. Product is effective in reducing airborne sound transmission through perimeter joints and openings in building construction as demonstrated by testing representative assemblies per ASTM E90.

2. Product has flame-spread and smoke-developed ratings of less than 25 per ASTM E84.

2.07 MISCELLANEOUS MATERIALS

A. General: Provide auxiliary materials for gypsum drywall construction which comply with referenced installation standards and the recommendations of the manufacturer of the gypsum board.

B. Laminating Adhesive: Adhesive or joint compound recommended for directly adhering gypsum boards to continuous substrates.

C. Spot Grout: ASTM C475, setting-type joint compound of type recommended for spot grouting hollow metal door frames.

D. Fastening Adhesive for Wood: ASTM C557.

E. Fastening Adhesive for Metal: Special adhesive recommended for attaching gypsum panels to steel framing.

F. Steel drill screws complying with ASTM C1002 for the following applications:

1. Fastening gypsum board to steel members less than 0.03 inch thick.

2. Fastening gypsum board to gypsum board.

G. Steel drill screws complying with ASTM C954 for fastening gypsum board to steel members from 0.033 to 0.112 inch thick.

H. Gypsum Board Nails: ASTM C514.

I. Water: All water used in joint system shall be clean and free from deleterious amounts of foreign material.

J. Other Materials: All other materials not specifically described but required for a complete and proper installation of gypsum drywall shall be as selected by the Contractor, subject to approval by the Architect.

K. AUXILIARY MATERIALS

1. Adhesives: As recommended in manufacturer's written instructions.

2. Steel Drill Screws: Provide fasteners, complying with the following requirements, that are of sufficient length and size to securely fasten gypsum-reinforced fabrications to framing members:

3. Joint Treatment Materials: Provide materials complying with ASTM C475 and with the recommendations of the manufacturers of both glass-reinforced gypsum fabrications and joint treatment materials for each application indicated.

4. Control Joints: One-piece control joint with V-shaped slot and removable strip covering slot opening, formed from steel sheet zinc-coated by hot-dip process or from rolled zinc, and complying with ASTM C1047.

L. FABRICATION

1. Fabricate glass-reinforced gypsum units from molds constructed of rigid materials that will result in smooth-finished surfaces conforming to profiles, dimensions, and tolerances indicated. Provide units as large as practical to minimize joints.

2. Remove units from molds and repair hollows, voids, scratches, and other surface imperfections.

3. Material Compatibility: Fabricate glass-reinforced gypsum fabrications with surface characteristics required for a high-gloss paint finish.

4. Embedments: Incorporate embedments so they develop the full strength of glass-reinforced gypsum fabrications. Cover embedments with glass-reinforced gypsum composite not less than 3/16 inch thick.

5. Connection Hardware: Custom designed and fabricated to support and connect glass-reinforced gypsum fabrications to hangers, support framing, and substrates.

6. Dimensional Tolerances of Units: As follows:

a. Factory-Finished Edge Straightness: Plus or minus 1/8 inch.

b. Plane Surface Straightness: Plus or minus 1/8 inch.

c. Overall Assembled Length and Width: Plus or minus 1/8 inch per 10 feet.

d. Chords, Radii, and Diameters: Plus or minus 1/8 inch.

e. Squareness: Not more than 1/4-inch difference between diagonals in 16 sq. ft.

PART 3 EXECUTION

3.01 EXAMINATION

A. Examine substrates with Installer present, to which gypsum board assemblies attach or abut, installed hollow metal frames, cast-in-anchors, and structural framing, with Installer present, for compliance with requirements for installation tolerances and other conditions affecting performance of assemblies specified in this Section. Do not proceed with installation until unsatisfactory conditions have been corrected.

3.02 CEILING ANCHORAGES:

A. Coordinate installation of ceiling suspension systems with installation of overhead structural assemblies to ensure that inserts and other provisions for anchorages to building structure have been installed to receive ceiling hangers that will develop their full strength and at spacing required to support ceilings.

3.03 INSTALLATION - STEEL FRAMING, GENERAL

A. Steel Framing Installation Standard: Install steel framing to comply with ASTM C754 and with ASTM C840 requirements that apply to framing installation.

B. Install supplementary fire-treated blocking, and bracing at terminations in the work and for support of fixtures, equipment services, heavy trim, grab bars, toilet accessories, furnishings, and similar construction to comply with details indicated and with recommendations of gypsum board manufacturer, or if none available, with "Gypsum Construction Handbook" published by United States Gypsum Co.

C. Do not bridge building expansion and control joints with steel framing or furring members. Independently frame both sides of joints with framing of furring members or an indicated.

D. Isolate steel framing from building structure at locations indicated to prevent transfer of loading imposed by structural movement. Comply with details shown on Drawings.

3.04 INSTALLATION - STEEL FRAMING FOR WALLS AND PARTITIONS

A. Install runners (tracks) at floors, ceilings and structural walls and columns where gypsum drywall stud system abuts other construction.

B. Installation Tolerances: Install each steel framing and furring member so that fastening surfaces do not vary more than 1/8 inch from plane of faces of adjacent framing.

C. Extend partition framing full height to structural supports or substrates above suspended ceilings, except where partitions are indicated to terminate at suspended ceilings. Continue framing over frames for doors and openings and frame around ducts penetrating partitions above ceiling to provide support for gypsum board.

D. For STC-rated and fire-resistive-rated partitions requiring partitions to extend to the underside of floor/roof slabs and decks or other continuous solid structural surfaces to obtain ratings, install framing around structural and other members extending below floor/roof slabs and decks, as needed, to support gypsum board closures needed to make partitions continuous from floor to underside of solid structure.

1. Terminate partition framing at suspended ceilings where indicated.

E. Install steel studs and furring in sizes and at spacings indicated but not less than that required by referenced steel framing installation 16 inches standard.

1. For single-layer construction: on center.

F. Install steel studs so that flanges point in the same direction and gypsum boards can be installed in the direction opposite to that of the flange.

G. Frame door openings to comply with details indicated, with GA 216 and with applicable published recommendations of gypsum board manufacturer. Attach vertical studs at jambs with screws, wither directly to frames or to jamb anchor clips on door frames; install runner track section (for cripple studs) at head and secure to jamb studs.

3.05 INSTALLATION - STEEL FRAMING FOR SUSPENDED AND FURRED CEILINGS

A. Screw furring members to metal framing.

B. Suspend ceiling hangers from building structural members and as follows:

1. Install hangers plumb and free from contact with insulation or other objects within ceiling plenum that are not part of supporting structural or ceiling suspension system. Splay hangers only where required to miss obstructions and offset resulting horizontal forces by bracing, countersplaying, or other equally effective means.

2. Where width of ducts and other construction within ceiling plenum produces hanger spacings that interfere with the location of hangers required to support standard suspension system members, install supplemental suspension members and hangers in form of trapezes or equivalent devices. Size supplemental suspension members and hangers to support ceiling loads within performance limits established by referenced standards.

3. Secure wire hangers by looping and wire-tying, either directly to structures or to inserts, eyescrews, or other devices and fasteners that are secure and appropriate for substrate, and in a manner that will not cause them to deteriorate or otherwise fail due to age, corrosion, or elevated temperatures.

4. Secure flat, angle, channel, and rod hangers to structure, including intermediate framing members, by attaching to inserts, eyescrews, or other devices and fasteners that are secure and appropriate for structure, as well as for type of hanger involved, and in a

manner that will not cause them to deteriorate or fail due to age, corrosion, or elevated temperatures.

5. Do not attach hangers to steel deck tabs.
6. Do not attach hangers to steel roof deck. Attach hangers to structural members.
7. Do not connect or suspend steel framing from ducts, pipes or conduit.
8. Sway-brace suspended steel framing with hangers used for support.

C. Install suspended steel framing components in sizes and at spacings indicated but not less than that required by the referenced steel framing installation standard.

1. Wire Hangers: 0.1620-inch (8-gauge) diameter, 4 feet o.c.
2. Carrying Channels (Main Runners): 1-1/2, 4 feet o.c.
3. Rigid Furring Channels (Furring Members): 16 inches o.c.
4. Rigid Furring Channels (Furring Members): 24 inches o.c.

D. Installation Tolerances: Install steel framing components for suspended ceilings so that cross-furring members or grid suspension members are level to within 1/8 inch in 12 feet as measured both lengthwise on each member and transversely between parallel members.

E. Wire-tie or clip furring members to main runners and to other structural supports as indicated.

F. Grid Suspension System: Attach perimeter wall track or angle where grid suspension system meets vertical surfaces. Mechanically join main beam and cross-furring members to each other and butt-cut to fit into wall track.

3.06 APPLICATION AND FINISHING OF GYPSUM BOARD, GENERAL

A. Gypsum Board Application and Finishing Standards: Install and finish gypsum board to comply with ASTM C840 and GA-216.

B. Install sound attenuation blankets where indicated, prior to gypsum board unless readily installed after board has been installed on one side.

C. Locate exposed end-butt joints as far from center of walls and ceilings as possible and stagger not less than 24 inches in alternate courses of board.

D. Install ceiling boards across framing in the manner which minimizes the number of end-butt joints and which avoids end joints in the central area of each ceiling. Stagger end joints at least 24 inches, but not less than one framing member.

E. Install wall/partition boards in manner which minimizes the number of end-butt joints or avoids them entirely where possible. At stairwells and similar high walls, install boards horizontally with end joints staggered over studs. Gypsum boards shall extend tight to floors and ceilings with no gaps.

F. Install exposed gypsum board with face side out. Do not install imperfect, damaged, or damp boards. Butt boards together for a light contact at edges and ends with not more than 1/16 inch open space between boards. Do not force into place.

G. Locate either edge or end joints over supports, except in horizontal applications where intermediate supports or gypsum board back-blocking is provided behind end joints. Position boards so that like edges abut, tapered edges against tapered edges and mill-cut or field-cut ends against mill-cut or field-cut ends. Do not place tapered edges against cut edges or ends. Stagger vertical joints over different studs on opposite sides of partitions.

H. Attach gypsum board to steel studs so that leading edge or end of each board is attached to open (unsupported) edge of stud flanged first.

I. Attach gypsum board to supplementary framing and blocking provided for additional support at openings and cutouts.

J. Form control joints and expansion joints at locations indicated, with space between edges of boards, prepared to receive trim accessories. If not shown on Drawings, control joints shall be installed as follows, in locations as approved by Architect:

1. A control joint shall be installed where a partition, wall, or ceiling traverses a construction joint (expansion, seismic or building control element) in the base building structure.
2. Control joints shall be installed where a wall or partition runs in an uninterrupted straight plane exceeding 30 linear feet.
3. Control joints in interior ceilings with perimeter relief shall be installed so that linear dimensions between control joints do not exceed 50 feet and total area between control joints does not exceed 2500 sq. ft.
4. Control joints in interior ceilings without perimeter relief shall be installed so that linear dimensions between control joints do not exceed 30 feet and total area between control joints does not exceed 900 sq. ft.
5. A control joint or intermediate blocking shall be installed where ceiling framing members change direction.

K. Where a control joint occurs in an acoustical or fire rated system, blocking shall be provided behind the control joint by using a backing material consisting of 5/8" type X gypsum board.

L. Isolate perimeter of non-load-bearing drywall partitions at structural abutments. Provide 1/4 inch to 1/2 inch space and trim edge with "U" bead edge trim. Seal joints with acoustical sealant.

M. Where STC-rated gypsum board assemblies are indicated, seal construction at perimeters, control and expansion joints, openings and penetrations with a continuous bead of acoustical sealant including a bead at both faces of partitions. Comply with ASTM C919 and manufacturer's recommendations for location of edge trim and close off sound-flanking paths around or through construction, including sealing of partitions above acoustical ceilings.

N. Space fasteners in gypsum boards in accordance with referenced gypsum board application and finishing standard and manufacturer's recommendations.

3.07 INSTALLATION - GYPSUM BOARD

A. Single-Layer Application: Install gypsum wallboard as follows:

1. On ceilings, apply gypsum board prior to wall/partition board application to the greatest extent possible and at right angles to framing, unless noted otherwise.
2. On partitions/walls, apply gypsum board vertically (parallel to framing), unless otherwise indicated, and provide sheet lengths which will minimize end joints.

B. Multi-layer Application: Install gypsum backing board for base layer and gypsum wallboard for face layer.

1. On ceilings, apply base layer prior to applying base layer on walls/partitions; apply face layers in same sequence. Offset face-layer joints one framing member, but not less than 16 inches from parallel base-layer joints. Apply base layers at right angles to framing members unless otherwise indicated.
2. On partitions/wall, apply base layer and face layers vertically (parallel to framing) with joints of base layer over supports and face layer joints offset at least, one stud or furring member, not less than 10 inches with base layer joints.
3. On Z-furring members, apply base layer vertically (parallel to framing) and face layer either vertically (parallel to framing) or horizontally (perpendicular to framing) with vertical joints offset at least one furring member. Locate edge joints of base layer over furring members.

C. Single-Layer Fastening Methods: Apply gypsum boards to supports with steel drill screws.

D. Multi-Layer Fastening Methods: Apply base layer of gypsum board and face layer to base layer as follows:

1. Fasten both base layers and face layers separately to supports with screws.

E. Direct-Bonding (Laminating) to Substrate: Where gypsum panels are indicated as directly adhered to a substrate (other than studs, joists, furring members or base layer of gypsum board), comply with gypsum board manufacturer's recommendations, and temporarily brace or fasten gypsum panels until fastening adhesive has set.

F. Install gypsum wallboard panels with tapered edges taped and finished to produce a flat surface except at showers, tubs, and other locations indicated to receive water-resistant panels.

3.08 INSTALLATION - TRIM ACCESSORIES

A. General: Where feasible, use the same fasteners to anchor trim accessory flanges as required to fasten gypsum board to the supports. Otherwise, fasten flanges to comply with manufacturer's recommendations.

B. Install corner beads at external corners.

C. Install edge trim where edge of gypsum panels would otherwise be exposed or semi-exposed. Provide edge trim type with face flange formed to receive joint compound except where other types are indicated.

D. Install edge trim where edge of gypsum board would otherwise be exposed or semi-exposed. Provide edge trim-type with face flange to receive joint compound except where other types are indicated.

1. Install "LC" bead where gypsum panels are tightly abutted to other construction and back flange can be attached to framing or supporting substrate.

2. Install "L" bead where edge trim can only be installed after gypsum board is installed.

3. Install U-type trim where edge is exposed, revealed, gasketed, or sealant-filled (including expansion joints).

3.09 FINISHING OF GYPSUM BOARD ASSEMBLIES

A. General: Apply joint treatment at gypsum board joints (both directions), flanges of corner bead, edge trim, and control joints, penetrations, fastener heads, surface defects and elsewhere as required to prepare work for decoration and level of gypsum board finish indicated.

1. Prefill open joints, rounded or beveled edges, and damaged areas, using setting-type joint compound.

2. Apply joint tape over gypsum board joints except those with trim accessories having concealed face flanges not requiring taping to prevent cracks from developing in joint treatment at flange edges.

B. Levels of Gypsum Board Finish: Provide the following levels of gypsum board finish per GA-214.

1. Level 1 for ceiling plenum areas, concealed areas, and where indicated, unless a higher level of finish is required for fire-resistive-rated assemblies and sound-rated assemblies.

2. Level 2 where water-resistant gypsum backing board panels form substrates for tile, and where indicated.

3. Level 4 for gypsum board surfaces indicated to receive light-textured finishes, and flat paints over light textures.

4. Level 4 for gypsum board surfaces indicated to receive gloss and semi-gloss enamels, nontextured flat paints, and where indicated.

C. For Level 4 gypsum board finish, embed tape in finishing compound plus two separate coats applied over joints, angles, fastener heads, and trim accessories using one of the following combinations of joint compounds (not including prefill), and sand between coats and after last coat.

D. Where Level 2 gypsum board finish is indicated, apply joint specified for first coat in addition to embedding coat.

E. Where Level 1 gypsum board finish is indicated, apply joint compound specified for embedding coat.

F. Allow not less than 24 hours drying time between coats.

G. Glass-Mat Gypsum Interior Wall Panel:

1. Finish according to manufacturer's written instructions for use in interior applications.

3.10 PATCHING EXISTING INTERIOR GYPSUM BOARD

A. General:

1. Provide for patching of existing construction cut or otherwise damaged or defaced as a result of selective structure demolition operations or the cutting, fitting, and installation of new work.

2. Perform cutting and patching using materials specified for new work. Select materials to match existing materials and as required to provide results indicated.

3. Provide for replacement of existing materials and construction when results of patching and refinishing existing construction will not be satisfactory, and as necessary to achieve finished surfaces indicated.

4. Replace materials comprising fire-rated or smoke-rated assemblies when damaged beyond repair or where repairs cannot be made in compliance with the assembly listing. Comply with listed assembly requirements as stated in the listing.

5. Finish repairs and replacements as required to receive finish materials indicated and so that final finished surface matches existing adjacent surfaces. Refinish entire wall or ceiling surfaces as necessary to comply with surface preparation requirements of finish materials indicated for each surface.

6. Patched or repaired areas shall be indiscernible existing adjacent surfaces by sight or touch when finishing work, is complete.

B. Repair Procedures:

1. Cut out and remove gypsum board having damage extending more than half way through the thickness of the board.

2. Where wiring and electrical junction boxes are being removed or added, walls may require patching.

3. Provide additional framing so that gypsum board patch has a minimum of 2 sides screw attached.

4. Cut damaged paper facing with knife and remove loose and damaged materials.

5. Install patch cut from same type and thickness of gypsum board as existing. Size and fit patch to leave 1/8-inch joints, maximum.

a. Install and finish gypsum board in conformance with ASTM C840 and GA-216.

b. Screws:

1) Locate 3/8-inch minimum from edges or ends of panel. Power-driven to provide uniform dimple 1/32-inch deep.

2) Space screws 8-inches o.c. in field of panels and 6-inches o.c. along vertical abutting edges.

6. Metal Trim:

a. Replace damaged metal trim.

b. Fasten with screws or 9/16-inch galvanized staples 9-inches o.c.

7. Corner Beads:

a. Replace damaged corner beads.

b. Fasten with screws or 9/16-inch galvanized staples 9-inches o.c. on both flanges along entire length of bead.

8. Apply joint compound in 1/8-inch maximum coats to gypsum board having minor damage extending less than halfway through board. Allow compound to set between coats.

9. Apply joint tape and compound system to untrimmed joints between gypsum boards and patches, including interior corners, and finish smooth and level with gypsum board faces leaving surface suitable for wall finish.

10. Apply joint compound to trim, and fastener heads. Finish smooth and level with partition face leaving surface suitable for wall finish.

11. Restore or replace finish as indicated on the Drawings.

3.11 ADJUST AND CLEAN

A. Cut, patch, repair, and point-up gypsum board as required. Repair cracks and indented surfaces.

B. Promptly remove compound from door frames, windows, and other surfaces. Repair floors, walls, and other surfaces which have been stained, marred, or otherwise damaged during the framing and gypsum board work. Daily remove unused materials, containers, and equipment. Clean floors of all gypsum board and wood debris and leave broom clean.

C. Clean spilled or splattered materials from adjacent surfaces not to be coated, immediately before coating has achieved an initial set. Do not scratch or damage adjacent finished surfaces.

3.12 PROTECTION

A. Provide final protection and maintain conditions, in a manner suitable to installer, which ensures gypsum drywall construction being without damage or deterioration at time of Substantial Completion.

END OF SECTION 09 21 16

SECTION 09 30 00 (09310)
TILING

PART 1 PRODUCTS

1.01 SUMMARY

A. Section Includes:

1. Floor and Wall Tile and Accessories
2. Crack Bridging Membrane
3. Leveling Coat, Mortar, Grouts, and Adhesives
4. Thresholds

B. Related Sections:

1. Section 07 92 00 – Joint Sealants
2. Section 09 21 16 - Gypsum Board Assemblies

1.02 REFERENCES

A. Tile Council of North America, Inc. (TCA):

1. "Hand Book for Ceramic Tile Installation"

B. American National Standards Institute (ANSI)

1. "American Standard Specification for the Installation of Ceramic Tile"
2. A108.5 - Ceramic Tile Installed with Dry-Set Portland Cement Mortar.
3. A108.6 - Specifications for Ceramic Tile Installed with Chemical-Resistant, Water-Cleanable Tile-Setting and -Grouting Epoxy
4. A108.10 - Specifications for Installation of Grout in Tilework.
5. A118 - Latex-Portland Cement Mortar4
6. A118.1 - Dry-Set Portland Cement Mortar
7. A118.3 - Chemical-Resistant, Water-Cleanable, Tile-Setting and -Grouting Epoxy and Water-Cleanable Tile-Setting Epoxy Adhesive
8. A118.4 – "Latex-Portand Cement Mortar"
9. A118.7 – "Polymer Modified Cement Grouts"
10. A136.1 - Organic Adhesives for Installation of Ceramic Tile
11. A137.1 - Recommended Standard Specifications for Ceramic Tile

C. ASTM International Publications:

1. C241 "Standard Test Method for Abrasion Resistance of Stone Subjected to Foot Traffic"
2. C503 "Standard Specification for Marble Dimension Stone (Exterior)"
3. C627 "Standard Test Method for Evaluating Ceramic Floor Tile Installation Systems Using the Robinson-Type Floor Tester"
4. C1028 "Standard Test Method for Determining the Static Coefficient of Friction of Ceramic Tile and Other Like Surfaces by the Horizontal Dynamometer Pull-Meter Method"

1.03 SUBMITTALS

A. General: Submit in accordance with Conditions of Contract and Division 01 Specification Sections.

B. Samples for Verification: Submit in duplicate, and obtain Architect's approval prior to delivery.

1. Floor panels approximately 12" square units of each type and composition of tile and for each color and finish required.

2. Metal edge strips in 6-inch lengths.

C. Product Certificates: Standard Grade conforming to TCA. 137.1.

1.04 QUALITY ASSURANCE

A. In addition to complying with all pertinent codes and regulations, conform to ANSI - American Standard Specification for the Installation of Ceramic Tile.

B. A single manufacturer shall produce all tiles and accessories.

C. Performance Requirements:

1. Static Coefficient of Friction: For tile installed on walkway surfaces, provide products with the following values as determined by testing identical products per ASTM C1028:

a. All horizontal Surfaces: Minimum 0.6 Wet

b. Step Treads: Minimum 0.6. Wet

1.05 DELIVERY, STORAGE, AND HANDLING:

A. Deliver packaged materials and store in original containers with seals unbroken and labels intact until time of use in accordance with manufacturer's directions. Protect adhesives from freezing or overheating in accordance with manufacturer's instructions.

B. Comply with ANSI A137.1 for labeling sealed tile packages.

C. Prevent damage or contamination to materials by water, freezing, foreign matter, and other causes.

1.06 PROJECT CONDITIONS

A. Substrate shall be prepared to receive new tile in a manner acceptable to the tile manufacturer. Existing flooring and other materials shall be removed and surface prepared to accept new tile.

B. Environmental Limitations: Do not install tile until construction in spaces is completed and ambient temperature and humidity conditions are being maintained to comply with referenced standards and manufacturer's written instructions.

1.07 EXTRA MATERIALS

A. Furnish extra materials described below that match products installed, are packaged with protective covering for storage, and are identified with labels describing contents.

1. Tile and Trim Units: Furnish quantity of full-size units equal to one case for each type, composition, color, pattern, and size indicated.

PART 2 PRODUCTS

2.01 FLOOR AND WALL TILE

A. Approved Manufacturers:

1. Floor Tile: Refer to Interior Finish Schedule on Drawings

2. Wall Tile: Refer to Interior Finish Schedule on Drawings

B. Tile Base and Accessories: Provide special shapes such as bull-nose edges and other accessories as required, to match wall tile.

1. Provide matching bull-nose tile at all exposed edges.

2.02 CRACK BRIDGING MEMBRANE

A. Approved Manufacturers:

1. "TEC Hydraflex Crack Isolation and Waterproofing Membrane"; TEC Specialty Construction Brands (800-832-9023)

2. Laticrete 150 Crack Isolation Mat"; Laticrete International Inc. (800-243-4788).

3. "Dal-Seal TS", Dal-Tile (800-933-Tile).

4. "Strataflex Anti-Fracture Membrane"; National Applied Construction Products, Inc., (800-633-4622).

5. "Nobleseal CIS Crack Isolation Sheet", The Noble Co., (800-878-5788).

B. Provide self-bonding elastomeric membrane capable of heavy-duty service per ASTM C627. Liquid-applied products will not be allowed.

C. Primer: As required by the slip sheet manufacturer.

D. Furnish in 12 inch and 36 inch wide sheets in lengths required.

2.03 LEVELING COAT

A. Leveling coat shall be 1/4" thick or less and shall consist of dry set mortar to which an equal volume of a mixture of one part Portland Cement and 1-1/2 parts sand has been added.

B. Maximum variation in surface of leveling coat shall not exceed 1/8" in 8'-0" from required plane.

C. Leveling coat shall be cured at least 24 hours before tile is applied.

D. Surface to which leveling coat is to be applied shall be free of any coatings, oil, and wax.

2.04 MORTAR MATERIALS: FLOOR TILE

A. Approved Manufacturers:

1. "Flexible Multi-purpose Thin Set Mortar/B-730"; WR Bonsal Co. (800-888-1621)

2. "Hydroment Flex-A-Lastic/Tile-Mate"; Hydroment (Bostick Findley,Inc.) (800-523-2678)

3. "Laticrete 254 Platinum Multipurpose Thinset Mortar"; Laticrete International Inc. (800-243-4788)

4. "FlexBond Premium Flexible Bonding Mortar": Custom Building Products (800-272-8786)

5. "TEC 3N1 Performance Mortar", TEC Specialty Construction Brands (800-832-9023)

B. Bond Coat: Thin Set Mortar with Polymer or Acrylic/Latex Additive

C. Installation conforming to ANSI A108.6 and A118.4 and Tile Council of America Handbook for Ceramic Tile Installation No. F122 and TR911.

2.05 WALL ADHESIVE MATERIALS - CERAMIC TILE

A. High strength latex-based, non-flammable adhesive formulated to meet or exceed the requirements of ANSI A136.1, Type 1.

B. Approved Manufacturers - Gypsum Wallboard Adhesive:

1. "7001 Mastic"; Hydroment (Bostick Findley, Inc.) (800-523-2678)

2. "Laticrete 15 Premium Multi-Mastic Adhesive"; Laticrete International Inc. (800-243-4788)

3. "B-2000 Wall Adhesive"; WR Bonsal Co. (800-888-1621)

4. "CustomBond Ceramic Tile Mastic"; Custom Building Products (800-272-8786)

5. "TEC Double Duty Plus", TEC Specialty Construction Brands (800-832-9023)

2.06 GROUT MATERIALS

A. Approved Manufacturers:

1. Laticrete International Inc. (800-243-4788)

a. Epoxy Grout (All Joint Widths - Floor and Wall)

1) "Spectra LOCK Pro Epoxy Grout"

2) No Substitution.

2.07 THRESHOLDS

A. Georgia Marble, complying with ASTM C503 requirements, Grade A, free from cracks, chips, stains, or other defects, uniform in tone and coloring. Minimum abrasive-hardness value of 10 per ASTM C241. Finish to be fine sand-honed on faces and beveled edges.

1. Color: Carrara White

2. *Size as shown on Drawings.

2.08 OTHER MATERIALS:

A. Joint Sealant to include sealing of ceramic tile surfaces at internal and external corners, transitions in plane and where ceramic tile work abuts dissimilar materials.

1. Refer to Section 07920 (07 92 00) for sealant specifications.

B. Other materials, including adhesives not specifically described but required for a complete and proper installation of tiles, shall be only as recommended by the manufacturer of material to which it is applied.

2.09 MIXING MORTARS AND GROUT

A. Mix mortars and grouts to comply with referenced standards and mortar and grout manufacturers' written instructions.

B. Add materials, water, and additives in accurate proportions.

C. Obtain and use type of mixing equipment, mixer speeds, mixing containers, mixing time, and other procedures to produce mortars and grouts of uniform quality with optimum performance characteristics for installations indicated.

PART 3 EXECUTION

3.01 EXAMINATION:

A. Installer must examine the areas and conditions under which flooring and accessories are to be installed and notify the Contractor in writing of conditions detrimental to the proper and timely completion of the work. Do not proceed with the work until unsatisfactory conditions have been corrected in a manner acceptable to the installer.

3.02 PREPARATION:

A. Prior to laying flooring, vacuum and remove all contaminates from surfaces to be covered and inspect subfloor. Start of flooring installation indicates acceptance of subfloor conditions and full responsibility for completed work. Use leveling compound as recommended by flooring manufacturer for filling small cracks and depressions in subfloors.

B. Apply concrete slab primer for ceramic tile, if recommended by flooring manufacturer, prior to application of adhesive. Apply in compliance with manufacturer's directions.

3.03 CRACK BRIDGING MEMBRANE

A. Install membrane in strict accordance with manufacturer's specifications.

B. Provide 12 inch wide strip at all control joints and existing cracks in concrete floor.

3.04 TILE INSTALLATION - GENERAL

A. Comply with the ANSI Standard Installation Specification A108.1 through A108.13 and TCA's "Handbook for Ceramic Tile Installation".

B. Handle, store, mix, and apply mortar and grout in compliance with manufacturer's instructions.

C. Extend tile work into recesses and under equipment and fixtures to form a complete covering without interruptions. Terminate work neatly at obstructions, edges, and corners without disruption of pattern, joint alignment, or bridging of Expansion Joints or Control Joints.

D. Install tile after finishing operations, including painting, have been completed. Moisture content of concrete slabs, building air temperature, and relative humidity must be within limits recommended by the flooring manufacturer.

E. Lay tile from center marks established from center of area so that tile at opposing edges of the area are of equal width. Adjust as necessary to avoid use of cut widths less than 1/2 tile at edge perimeters. Lay tile square to room axis unless otherwise shown.

F. Match tiles for color and pattern by using tile from cartons in same sequence as manufactured and packaged. Cut tile neatly in and around all fixtures. Broken, cracked, chipped, or deformed tile are not acceptable.

G. Expansion Joints: Provide expansion joints, control joints and pressure relieving joints of widths and locations according to TCA Handbook Construction No. EJ171, and as approved by Architect. Do not saw cut joints after application.

H. Lay tile with grain in tile running in same direction. Accurately form intersections and returns. Perform cutting and drilling of tile without marring visible surfaces. Grind cut edges of tile abutting trim, finish, or built-in items.

I. Sound tile after setting and replace hollow sounding units.

J. Grout tile to comply with the requirements of the ANSI A18.10 tile installation standards:

3.05 SHOWER FLOOR PAN LINER INSTALLATION

A. Install materials as directed by manufacturer to provide a concealed waterproof membrane. All seams shall be adhered to prevent delamination as specified by manufacturer. Upon completion, test for leaks by plugging the drain and filling with water. Make necessary adjustments to stop all leakage and retest until watertight, before top layers are installed.

3.06 FLOOR TILE INSTALLATION

A. General: Install tile to comply with requirements in the Ceramic Tile Floor Installation Schedule, including those referencing TCA installation methods and ANSI A108 series of tile installation standards.

B. Back Buttering: For installations indicated, obtain 100% mortar coverage by complying with applicable special requirements for back buttering of tile in referenced ANSI A108 series of tile installation standards:

1. Tile floors in wet areas, including showers, tub enclosures, laundries, and swimming pools.

2. Tile floors composed of rib-backed tiles.

C. Stone Thresholds: Install stone thresholds at locations indicated; set in same type of setting bed as abutting field tile, unless otherwise indicated.

3.07 WALL TILE INSTALLATION

A. Install types of tile designated for wall installations to comply with requirements in the Ceramic Tile Wall Installation Schedule, including those referencing TCA installation methods and ANSI setting-bed standards.

B. Back Buttering: For installations indicated, obtain 100% mortar coverage by complying with applicable special requirements for back buttering of tile in referenced ANSI A108 series of tile installation standards:

1. Tile wall installations in wet areas.

2. Tile wall installations composed of tiles 8"x 8" or larger.

3.08 GROUTING

A. Joints shall be packed full and free of all voids or pits, joints shall not be raked. Excess grout shall be cleaned from the surface with water as work progresses. Cleaning shall be done while mortar is fresh and before it hardens on the surface.

B. Grout shall be installed in accordance with ANSI A108.10 (A108.6 for epoxy) and the manufacturer's recommended procedures and precautions during application and cleaning.

3.09 ADJUST AND CLEAN

A. Clean grout and setting material from face of tile while materials are workable. Leave tile face clean and free of all foreign matter.

B. Leave finished installation clean and free of cracked, chipped, broken, unbonded, or otherwise defective work.

C. Protection: When recommended by tile manufacturer, apply a protective coat of neutral protective cleaner to completed surface. Protect installed tile work with Kraft paper or other heavy covering during the construction period to prevent damage. Prohibit all foot and wheel traffic from using tiled floors for at least 3 days, preferably 7 days.

D. Before final inspection, remove protective coverings and rinse neutral cleaner from all tile surfaces.

END OF SECTION 09 30 00 (09310)

SECTION 09 51 23
ACOUSTICAL TILE CEILINGS

PART 1 GENERAL

1.01 SUMMARY

A. Section Includes:

1. Suspended Metal Grid Systems complete with wall trim
2. Acoustical Ceiling Tiles

B. Related Sections:

1. Divisions 21, 23, and 26 Sections for light fixtures, sprinklers, and air-distribution components.

1.02 REFERENCES

A. ASTM International (ASTM) Publications: (Former American Society for Testing and Materials)

1. C636 "Standard Practice for Installation of Metal Ceiling Suspension Systems for Acoustical Tile and Lay-In Panels"

1.03 SUBMITTALS

A. General: Submit the following in accordance with Conditions of Contract and Division 01 Specification Sections:

1. Submit manufacturer's product and maintenance data for each type of ceiling system and accessory.

1.04 QUALITY ASSURANCE

A. Qualifications of Installers:

1. The suspended ceiling Subcontractor shall have a record of successful installations of similar ceilings acceptable to the Architect.
2. For the actual fabrication and installation of all components of the system, use only personnel who are thoroughly trained and experienced in the skills required and completely familiar with the requirements established for this work.

B. In addition to complying with all pertinent codes and regulations, suspension system shall be installed according to ASTM C636, Installation of Metal Ceiling Suspension System for Acoustical Tile and Lay-in Panels.

1.05 DELIVERY, STORAGE, AND HANDLING

A. Use all means necessary to protect the materials of this Section before, during, and after installation and to protect work and materials of all other trades.

1.06 PROJECT CONDITIONS

A. Do not install acoustical ceilings until building is enclosed, sufficient heat is provided, dust-generating activities have terminated, and overhead work is completed, tested, and approved.

1.07 REPLACEMENT STOCK

A. Refer to Section 01 78 43.

PART 2 PRODUCTS

2.01 STRUCTURAL EXPOSED SUSPENSION SYSTEM

A. Approved Manufacturers:

a. Armstrong World Industries, Inc. (888-234-5464)

b. USG Interiors, Inc. (800-950-3839)

c. CertainTeed Corporation, a Saint Gobain Company (800-233-8990)

B. Type I Grid:

1. Acceptable Products:

a. Prelude Plus XL Fire Guard Aluminum Capped Grid System, Armstrong World Industries, Inc.

b. DXLA Aluminum Capped Grid System, USG Interiors, Inc.

c. Approved Equivalent by CertainTeed Corporation, a Saint Gobain Company

2. Main Tees:

a. "DXLA Main Tee" with 1-1/2" ht., 15/16" face, aluminum; USG Interiors, Inc.

b. "Prelude Plus XL Fire Guard 12' HD Main Beam" with 1-11/16" ht. 15/16", face, aluminum; Armstrong World Industries, Inc.

c. Approved Equivalent by CertainTeed Corporation, a Saint Gobain Company

3. Cross Runners: Designed to support lay-in lighting fixtures and to receive acoustical tile at sides of fixture opening. Provide light fixture accessory as required to support specified light fixtures.

a. Acceptable Products:

1) "XL8240"; 1-11/16" high x 15/16" face, aluminum Armstrong World Industries, Inc.

2) "1-1/2" high x 15/16" face, aluminum USG Interiors, Inc.

3) Approved Equivalent by CertainTeed Corporation, a Saint Gobain Company

4. Perimeter Wall Angle:

a. Acceptable Products:

1) "HD7801G90 10' Hemmed Angle Molding, 7/8" face, aluminum Armstrong World Industries, Inc.

2) " Wall Angle," face, aluminum USG Interiors, Inc.

3) Approved Equivalent by CertainTeed Corporation, a Saint Gobain Company

5. Accessories: Provide all accessories needed for proper installation of system.

C. Finish: All exposed surfaces shall be finished White.

2.02 ACOUSTICAL MATERIALS: DESIGNATED ON DRAWINGS AS: **<ACT-1>** PROVIDED WITH GRID TYPE I

A. Products: Subject to compliance with requirements, provide one of the following:

1. Manufacturer/Product:

a. "Cleanroom V-L Perforated, #871, Square lay-in""; by Armstrong World Industries, Inc.

b. "Radar Ceramic ClimaPlus Square Edge (SQ) #56644 – USG Interiors, Inc.

c. Approved Equivalent by CertainTeed Corporation, a Saint Gobain Company

2. Size: 2' x 4'x 5/8"

3. Color: White

4. Edge Detail: Square.

5. CAC: Not less than 40

6. NRC: Not less than 0.50

2.03 LIGHTING:

A. Contractor shall be responsible for providing sufficient support on grid systems to support light fixtures. All fixtures shall be supported at each and every corner.

PART 3 EXECUTION

3.01 SURFACE CONDITIONS

A. Inspection: Prior to all work of this Section, carefully inspect the installed work of all other trades and verify that all such work is complete to the point where this installation may properly commence. Verify that suspended ceiling systems are installed in strict accordance with all pertinent codes and regulations, and the manufacturer's recommendations.

B. Discrepancies: In the event of discrepancy, immediately notify the Architect. Do not proceed in areas of discrepancy until all such discrepancies have been fully resolved.

3.02 INSTALLATION

A. General:

1. Install acoustical panel, suspension system and accessories in compliance with manufacturers instructions and requirements of ASTM C636.

2. Install ceiling system in a true and even plane with straight line courses laid out symmetrically about center lines of area or as indicated. Border tile shall be minimum 6" wide and neatly fit against vertical surfaces to form a tight fit.

3. Provide metal edge angle at perimeter of units as detailed on Drawings. Cut and fit around light fixtures, diffusers, etc.

B. Lay-In Ceiling System:

1. Hanging main tees parallel in a flat plane by means of #10 gauge wire hangers attached to construction above. Hangers shall be spaced not over 4'-0" along the main tees and within 6" of the ends and splices of main tees, and other interruptions. Main tees shall be spaced 2'- 0" o.c. Cross tees shall be interlocked to main tees and spaced as required to support tile edges.

2. Attachment to ducts, pipes, etc. will not be permitted. Bridge under obstructions with a grid of 1-1/2" cold rolled channels or other suitable members to support ceiling grid.

3. Install wall angle at perimeter of walls, partitions, columns, pipes, and other obstructions that extend above the ceiling. Securely attach with appropriate fastening devices at maximum 16" o.c. Form reveal of same depth and width as that formed between edge of panel and flange at exposed suspension grid. Neatly cut and fit around light fixtures, diffusers, etc. Provide wall angles fabricated to diameter required to fit penetrations.

4. Insert ceiling panels, installing hold down clips on panels extending over partitions and where required to maintain fire ratings.

5. At all locations where ceiling tiles are cut, the cut edges of the tiles shall match the premanufactured edges (i.e. cut edges are to be beveled to match beveled edged tiles). Exposed cut edges are to be painted to match face of tile with paint as approved by tile manufacturer.

3.03 ADJUSTING AND CLEANING

A. Completely remove all finger prints and traces of soil and damage from the surfaces of grid and acoustical materials, using only those cleaning materials recommended for that purpose by the manufacturer of the material being cleaned.

B. Replace units which are damaged or improperly installed.

END OF SECTION 09 51 23

SECTION 09 65 00
RESILIENT FLOORING

PART 1 GENERAL

1.01 SUMMARY

A. Section Includes:

1. Vinyl Composition Tile
2. Resilient Base
3. Solid Vinyl Transition Edges

B. Related Sections:

1. Section 09 30 00 - Tiling

1.02 REFERENCES

A. ASTM International Publications:

1. C241 "Standard Test Method for Abrasion Resistance of Stone Subjected to Foot Traffic"
2. C503 "Standard Specification for Marble Dimension Stone (Exterior)"
3. D2047 "Standard Test Method for Static Coefficient of Friction of Polish-Coated Flooring Surfaces as Measured by the James Machine"
4. D2240 "Standard Test Method for Rubber Property—Durometer Hardness"
5. D3389 "Standard Test Method for Coated Fabrics Abrasion Resistance (Rotary Platform, Double-Head Abrader)"
6. E648/NFPA 253 "Standard Test Method for Critical Radiant Flux of Floor-Covering Systems Using a Radiant Heat Energy Source"
7. E662/NFPA 258 "Standard Test Method for Specific Optical Density of Smoke Generated by Solid Materials"
8. F710 "Standard Practice for Preparing Concrete Floors to Receive Resilient Flooring"
9. F1066 "Standard Specification for Vinyl Composition Floor Tile"

B. Carpet & Rug Institute (CRI)

Standard for Installation of Commercial Carpet CRI 104, Current Edition

C. Code of Federal Regulations (CFR)

40 CFR 763 - Asbestos: Appendix A - Transmission Electron Microscopy Analytical Methods

D. Occupational Safety & Health Administration (OSHA) Regulations:

1. OSHA Regulation 29 CFR Toxic and Hazardous Substances 1910-1200 Hazard Communication

1.03 SUBMITTALS

A. General: Submit the following in accordance with Conditions of Contract and Division 01 Specification Sections:

1. Submit manufacturer's product and maintenance data for each type of resilient flooring and accessory.

a. Certification by resilient flooring manufacturer that products supplied for flooring installation comply with local regulations controlling use of volatile organic compounds (VOCS).

b. Asbestos Content: Provide written certification that tile and adhesive materials contain no asbestos of any type of mixture of types occurring naturally as impurities as determined by polarized light microscopy test per Appendix A of 40 CFR 763 will be utilized on this Project.

2. Submit color selection in the form of actual sections of resilient flooring, including accessories, for each type of resilient flooring required showing full range of colors and patterns available.

1.04 QUALITY ASSURANCE

A. Single-Source Responsibility for Flooring: Obtain each type, color and pattern of flooring from a single source with resources to provide products of consistent quality in appearance and physical properties without delaying progress of the work..

B. Installer: A firm with not less than five years of successful experience in installation of sheet vinyl flooring systems with chemically welded seams similar to those required for this project and which is certified by manufacturer of the sheet vinyl materials.

C. Fire-Test-Response Characteristics: Provide products with the following fire-test-response characteristics as determined by testing identical products per test method indicated below by a testing and inspecting agency acceptable to authorities having jurisdiction.

1. Critical Radiant Flux: 0.45 W/sq. cm or greater when tested per ASTM E648.

2. Smoke Density: Maximum specific optical density of 450 or less when tested per ASTM E662.

1.05 DELIVERY, STORAGE, AND HANDLING

A. Deliver tiles and installation accessories to Project site in original manufacturer's unopened cartons and containers each bearing names of product and manufacturer, Project identification, and shipping and handling instructions.

B. Store flooring materials in dry spaces protected from the weather with ambient temperatures maintained between 50 degrees F. and 90 degrees F. Store tile flooring materials on flat surfaces. Move resilient flooring and installation accessories into spaces where they will be installed at least 48 hours in advance of installation.

1.06 PROJECT CONDITIONS

A. Maintain a minimum temperature of 70 degrees F. in spaces to receive tiles for at least 48 hours prior to installation, during installation, and for not less than 48 hours after installation. After this period, maintain a temperature of not less than 55 degrees F.

B. Do not install resilient flooring until they are at the same temperature as the space where they are to be installed. Close spaces to traffic during resilient flooring installation.

1.07 SEQUENCING AND SCHEDULING

A. Do not install resilient flooring materials over concrete slabs until the slabs have cured and are sufficiently dry to bond with adhesive as determined by tile manufacturer's recommended bond and moisture test.

1.08 EXTRA MATERIALS

A. Furnish not less than one box of each class, wearing surface, color, pattern, and size of resilient floor tile installed. Refer to Section 01 78 43.

PART 2 PRODUCTS

2.01 VINYL COMPOSITION TILES:

A. Approved Manufacturers:

1. Armstrong World Industries, Inc. (800-442-4212 x 2)

2. Tarkett Inc., a Tarkett Sommer Company (800-877-8453)

3. Mannington Mills, Inc. (706-629-7301)

B. All vinyl tile shall be the maximum extent possible of a single batch number. Tile should have uniform disbursement of color and texture throughout the thickness of the tile. Comply with ASTM F1066, Composition 1 (nonasbestos formulated).

C. Size and pattern: To match existing or as indicated on Interior Finish Schedule on Drawings.

D. Color: As selected by Architect from Manufacturer's full range

2.02 RESILIENT BASE

A. Approved Manufacturers:

1. IPC Door and Wall Protection Systems, Inpro Corp. (800-543-1729)

2. Johnsonite (800-899-8916).

3. Burke Mercer Flooring Products, A Division of Burke Industries (800-669-7010).

B. Resilient bases shall be size as shown on Drawings. Provide cove type base at vinyl composite tile flooring, carpeting, and finished concrete. Job mitering of corners will not be permitted.

C. Color: As indicated on Interior Finish Schedule on Drawings.

2.03 TRANSITION EDGES

A. Approved Manufacturers:

1. Resilient Edge Trims and Transitions:

a. Roppe (800-537-9527)

b. Marley Flexco Co. , A Soflex Company (800-633-3151)

c. Johnsonite (800-899-8916)

d. Burke Mercer Flooring Products, A Division of Burke Industries (800-669-7010).

B. Color: As indicated on Interior Finish Schedule on Drawings.

C. Furnish transition edges as follows at the following locations:

1. Vinyl Composition Tile to Concrete: Roppe #22

2. Carpet Tile to Existing Vinyl Composition Tile: Roppe #23

2.04 INSTALLATION ACCESSORIES

A. Concrete Slab Primer: Nonstaining type as recommended by flooring manufacturer.

B. Trowelable Underlayments and Patching Compounds: Latex-modified, portland-cement-based formulation provided or approved by manufacturer for applications indicated.

C. Concrete Leveling and Patching compounds:

1. For areas up to 4 square feet:

a. Feather finish, use to smooth ridges, fill cracks, gouges and joints.

1) "SD-F"; Ardex (724-203-5000)

2) "Planiprep FF"; Mapei Corp. (800-426-2734)

b. Trowelable underlayment patch for thickness from feather edge to 3 inch without aggregate

1) "Quickpatch"; Mapei Corp. (800-426-2734)

c. Trowelable underlayment patch for thickness up to ½ inch without aggregate; up to 1 inch with aggregate. Can be feather edged.

1) "SD-P/ Primer P-82"; Ardex (724-203-5000)

2. For areas exceeding 4 square feet:

a. Self-leveling, pourable or pumpable underlayment for thicknesses up to 5 inches. Can be feather edged.

1) "K-15/Primer P-51"; Ardex (724-203-5000)

2) "Novoplan 2/Primer"; Mapei Corp. (800-426-2734) (Note: Refer to product datasheet for specific requirements based on substrates)

D. Resilient Floor Tile Adhesives: Provide water-resistant type recommended by tile manufacturer to suit floor tile and substrate conditions indicated.

1. Approved Manufacturers:

a. "Ultrabond ECO 360"; Mapei Corp. (800-426-2734)

b. Approved Substitution as approved by tile manufacturer.

E. Resilient Base Adhesives to be Non-Toxic, Low Odor, and Solvent Free with no alcohol, glycol, or ammonia. Adhesive shall be antimicrobial with no hazardous vapors and contain no carcinogenic materials, per OSHA Regulation 29 CFR 1910-1200. All containers shall contain material safety data sheets (MSDS) and be available at job site for inspection. Provide product as manufactured by W.F. Taylor Co., Inc. (800-397-4583) recommended for intended installation, as approved by resilient base manufacturer, or approved substitution.

1. Approved Manufacturers:

a. "Ultrabond ECO 575"; Mapei Corp. (800-426-2734)

b. Approved Substitution as approved by resilient base manufacturer.

F. Other materials, including edge strips not specifically described, but required for a complete and proper installation of resilient flooring, shall be only as recommended by the manufacturer of material to which it is applied.

PART 3 EXECUTION

3.01 INSPECTION

A. Installer must examine the areas and conditions under which resilient flooring and accessories are to be installed and notify the Contractor in writing of conditions detrimental to the proper and timely completion of the work. Do not proceed with the work until unsatisfactory conditions have been corrected in a manner acceptable to the Installer.

1. Visually inspect for evidence of moisture, alkaline salts, carbonation, dusting, mold, or mildew.

2. Failure to call attention to defects or imperfections will be construed as acceptance and approval of the subfloor. Installation indicates acceptance of substrates with regard to conditions existing at the time of installation.

3.02 CONCRETE SUBFLOORS OR GYPSUM CEMENT FLOOR UNDERLAYMENT

A. Verify that concrete slabs comply with ASTM F710 and the following:

1. Slab substrates are dry and free of curing compounds, sealers, hardeners, residual adhesives, adhesive removers, and other materials whose presence would interfere with bonding of adhesive. Determine adhesion and dryness characteristics by performing bond and moisture tests recommended by manufacturer.

2. Finishes of subfloors comply with tolerances and other requirements specified in Division 03 Section, "Cast-In-Place Concrete" for slabs receiving resilient flooring.

3. Subfloor Moisture Conditions: Before installing flooring Contractor shall verify that Moisture emission rate of not more than 3 lb/1000 sq. ft./24 hours when tested by calcium chloride moisture test in compliance with CRI 104, 6.2.1, with subfloor temperatures not less than 55 deg F, or as recommended by manufacturer.

4. Subfloor Alkalinity Conditions: Before installing flooring Contractor shall verify that a pH range of 5 to 9 when subfloor is wetted with potable water and pHydrion paper is applied

3.03 PREPARATION

A. General: Comply with manufacturer's installation specifications for preparing substrates to receive products indicated.

1. Comply with Armstrong Guaranteed Installation Manual F-5061, or equivalent by other listed manufacturers.

B. Sweep and vacuum clean substrates to be covered by floor coverings immediately before installation. After cleaning, examine substrates for moisture, alkaline salts, carbonation, and dust. Proceed with installation only after unsatisfactory conditions have been corrected.

C. This Contractor to remove coatings, including curing compounds, adhesives, plastics, and other substances that are incompatible with flooring adhesives and that contain soap, wax, oil, or silicone, by using a terrazzo or concrete grinder, a drum sander, or a polishing machine equipped with a heavy-duty wire brush. Surface to receive new flooring shall be fully prepared, including removal of existing materials not acceptable for proper installation of new materials, as required by manufacturer. Do not use solvents.

1. Prep floor according to ASTM F710 criteria.

D. Slab Primers:

1. Gypsum Cement Floor Underlayment: Apply Armstrong "S-185 Latex Primer and Additive", or approved substitution, to gypsum subfloor liberally with a short nap paint roller or a coarse fiber brush. Avoid puddling. Use at full strength, DO NOT DILUTE.

2. 2. Allow to dry thoroughly before skimming with floor patch

E. Underlayment or Leveling Compound: Use leveling compound as recommended by flooring manufacturer for filling small cracks and depressions in subfloors. All rough areas, projections, ridges, and bumps shall be removed.

1. Vinyl Composition Floor Tile: Apply underlayment or leveling compound in compliance with manufacturer's directions.

2. Sheet Vinyl Flooring: Skim coat the entire subfloor with Armstrong "S-184 Fast-Setting Cement-Based Patch and Skim Coat", or approved substitution, using a smooth-edge finishing trowel filling in the recessed areas to provide a smooth finished substrate to receive the sheet vinyl.

3.04 INSTALLATION - GENERAL

A. Install flooring after finishing operations, including painting, have been completed. Moisture content of concrete slabs, building air temperature, and relative humidity must be within limits recommended by flooring manufacturer's directions.

B. Patch and repair floors and walls to receive flooring for proper installation of flooring, stair accessories, and base.

C. Place flooring with adhesive cement in strict compliance with manufacturer's recommendations. Butt tightly to vertical surfaces and edgings. Scribe around obstructions and to produce neat joints, laid tight, even, and straight. Extend flooring into toe spaces.

D. Maintain reference markers, holes, or openings that are in place or plainly marked for future cutting by repeating on finish flooring as marked on subfloor. Use chalk or other non-permanent marking device.

E. Install flooring on covers for telephone and electrical ducts and other such items as occur within finished floor areas.

F. Maintain overall continuity of color and pattern with pieces of flooring installed in these covers. Tightly cement edges to perimeter of floor around covers and to covers.

G. Tightly cement flooring to subbase without open cracks, voids, raising and puckering at joints, telegraphing of adhesive spreader marks, or other surface imperfections.

3.05 INSTALLATION - VINYL COMPOSITION TILE FLOORS

A. Lay tile from center marks established from center of area so that tile at opposite edges of the area are of equal width. Adjust as necessary to avoid use of cut widths less than 1/2 tile at edge perimeters. Lay tile square to room axis unless otherwise indicated.

B. Match tiles for color and pattern by using tile from cartons in same sequence as manufactured and packaged. Cut tile neatly in and around all fixtures. Broken, cracked, chipped, or deformed tiles are not acceptable. Lay tile with grain in tile running in same direction.

C. Scribe, cut, and fit tiles to butt neatly and tightly to vertical surfaces and permanent fixtures including built-in furniture, cabinets, pipes, outlets, edgings, door frames, thresholds, and nosings.

D. Extend tiles into toe spaces, door reveals, closets, and similar openings.

E. Maintain reference markers, holes, and openings that are in place or marked for future cutting by repeating on floor tiles as marked on substrates. Use chalk or other nonpermanent, nonstaining marking device.

F. Adhere tiles to flooring substrates using a full spread of adhesive applied to substrate to produce a completed installation without open cracks, voids, raising and puckering at joints, telegraphing of adhesive spreader marks, and other surface imperfections.

3.06 RESILIENT WALL BASE INSTALLATION

A. At areas where base is required, apply resilient base to walls, columns, pilasters, casework, and other permanent fixtures, as coordinated with type of flooring. Install base in as long lengths as practicable. Tightly bond base to backing throughout the length of each piece with continuous contact at horizontal and vertical surfaces. On irregular surfaces, fill voids along top edge of resilient wall base with manufacturer's recommended adhesive filler material.

B. Job-Formed Corners:

1. Outside Corners: Use straight pieces of maximum lengths possible. Form without producing discoloration (whitening) at bends. Shave back of base at points where bends occur and remove strips perpendicular to length of base that are only deep enough to produce a snug fit without removing more than half the wall base thickness.

2. Inside Corners: Use straight pieces of maximum lengths possible. Form by cutting an inverted V-shaped notch in toe of wall base at the point where corner is formed. Shave back of base where necessary to produce a snug fit to substrate.

3.07 ACCESSORIES

A. Place resilient edge strips tightly butted to adjacent materials of type indicated and bond to substrates with adhesive. Install edging strips at all unprotected edges of flooring unless otherwise shown. Apply resilient accessories to stairs and risers as indicated and according to manufacturer's installation instructions.

3.08 CLEANING AND PROTECTION

A. Perform the following operations immediately after installing resilient floor coverings:

1. Remove adhesive and other surface blemishes using cleaner recommended by floor covering manufacturer.

2. Sweep or vacuum floor thoroughly.

3. Do not wash floor covering until after time period recommended by floor covering manufacturer.

4. Damp-mop floor to remove marks and soil.

B. Protect flooring against mars, marks, indentations, and other damage from construction operations and placement of equipment and fixtures during remainder of construction period. Use protection methods indicated or recommended by manufacturer of resilient product involved.

C. Clean products specified in this Section not more than four days prior to dates scheduled for inspections intended to establish date of Substantial Completion in each area of Project. Clean products using method recommended by manufacturer. Strip protective floor polish that was applied after completing installation, prior to cleaning.

D. Do not move heavy and sharp objects directly over resilient floor coverings. Place plywood or hardboard panels over floor coverings and under objects while they are being moved. Slide or roll objects over panels without moving panels.

3.09 FINISHING

A. After completion of project and just prior to final inspection of work, thoroughly clean floors and accessories. For resilient tile, apply wax and buff with type of wax, number of coats, and buffing procedures in compliance with flooring manufacturer's instructions.

END OF SECTION 09 65 00

SECTION 09 90 00
PAINTING

PART 1 GENERAL

1.01 SUMMARY

A. Section Includes:

1. This Section includes surface preparation and the application of paint materials to exposed interior and exterior items and surfaces scheduled. Surface preparation, prime and finish coats specified are in addition to shop-priming and surface treatments.

2. Paint all exposed surfaces, whether or not colors are designated, except where a surface or material is indicated not to be painted or is to remain natural. Where an item or surface is not mentioned, paint the same color as similar adjacent materials or surfaces. If color or finish is not designated, the Owner will select from standard colors or finishes available.

3. Except in mechanical and electrical rooms, paint all exposed plumbing, heating, fire protection, and electrical material to match the walls and ceilings of that area unless noted otherwise. This shall include, but not be limited to, pipes, sprinkler piping, insulation, conduit, ducts, access panels, grilles, diffusers, hangers, exposed steel and iron supports, HVAC and electrical equipment that do not have a factory applied finish, whether the adjacent surfaces receive paint or not, and the like. Include dampers or baffles behind grilles.

4. Unless noted otherwise, painting is not required on pre-finished items, finished metal surfaces, concealed surfaces, operating parts, sprinkler heads, or labels.

   a. All louvers and grilles to be painted to match adjacent surfaces.

   b. Labels: Do not paint over Underwriter's Laboratories, FMG or other code-required labels, or equipment name, identification, performance rating, or nomenclature plates.

5. Electro-statically, powder coat finish all existing and relocated lockers at the second floor corridors. Color to match new corridor locker units Refer to Section 10 51 13 Metal Lockers and Drawings for requirements.

B. Related Sections:

1. Section 04 20 00 – Unit Masonry

2. Prime coat on new hollow metal work shall be furnished under the "Hollow Metal Doors and Frames" Section 08 11 13.

3. Prime coat on lintels shall be furnished under the Division 05 Sections.

4. Prime and finish coat for exposed exterior ferrous metal items and ferrous metal items located in shower and locker rooms shall be furnished under the "High Performance Coatings", Section 09 96 00. Refer to that Section for items included.

1.02 DEFINITIONS:

A. General: Standard coating terms defined in ASTM D16 apply to this Section.

B. "Paint" includes coating systems materials, primers, emulsions, enamels, stains, sealers and fillers, and other applied materials whether used as prime, intermediate or finish coats.

1.03 REFERENCES

A. Code of Federal Regulations

1. **40 CFR, Part 59, Subpart D-2001**: National Volatile Organic Compound Emission Standards for Architectural Coatings (EPA Method 24)

1.04 SUBMITTALS

A. General: Submit the following in accordance with Conditions of Contract and Division 01 Specification Sections:

1. Product Data: Submit manufacturer's technical information, label analysis, and application instructions for each paint material proposed for use.

2. Samples: Submit two representative samples of each major type of surface or material. Do not proceed with final painting until samples are approved.

3. Color Charts: In duplicate, for all paints, stains and special coatings. Identify with numbers used on the "Interior Finish Index" or on the Drawings.

4. Painting Schedule: In a form similar to the schedule herein outlining the type of paint to be used for each category, application, and color. Indicate each material and cross-reference specific coating, finish system, and application. Identify each material by manufacturer's catalog number and general classification.

5. Quality Control Submittals:

a. Certifications: Manufacturer's statement that paint materials conform to current regulations relating to lead content and air pollution emission requirements.

6. Emission Test Reports.

B. Written Permission in writing by the Owner's Representative for the use of Mechanical application methods.

1.05 QUALITY ASSURANCE

A. Single Source Responsibility: Provide primers and undercoat paint produced by the same manufacturer as the finish coats.

B. Coordination of Work: Review Sections in which primers are provided to ensure compatibility of the total systems for various substrates.

C. Material Quality: Provide the manufacturer's best quality trade sale type paint material of the various types specified. Paint material containers not displaying manufacturer's product identification will not be acceptable. Proprietary names used to designate colors or materials are not intended to imply that products named are required or to exclude of equal products of other manufacturers.

1.06 DELIVERY AND STORAGE

A. Deliver materials to the job site in manufacturer's original, unopened packages and containers bearing manufacturer's name and label with trade name and manufacturer's instructions.

1. Product Name or Title of Material

2. Product Description (Generic Classification or Binder Type)

3. Manufacturer's Stock Number and Date of Manufacture

4. Contents by Volume, for Pigment and Vehicle Constituents

5. Thinning Instructions

6. Application Instructions

7. Color Name and Number

8. VOC Content

B. Approved materials without the above information will **NOT** be allowed on the Project site.

C. Store materials not in use in tightly covered containers in a well-ventilated area at a minimum ambient temperature of 45 deg. F. Protect from freezing. Keep storage area neat and orderly. Remove oily rags and waste daily.

1.07 PROJECT CONDITIONS

A. Do not apply paint in snow, rain, fog, or mist, or when the relative humidity exceeds 85 percent, or at temperatures less than 5 degrees F. above the dew point, or to damp or wet surfaces.

1.08 MATERIALS

A. Except where noted otherwise, all finishing materials, thinners, etc., shall be the best quality, first line materials as manufactured by:

B. Approved Manufacturers:

1. Sherwin-Williams Co. (S-W) (800-321-8194)

2. Benjamin Moore & Co. (BM) (888-236-6667)

3. Glidden Professional, an AkzoNobel Brand (888-615-8169)

C. Raw linseed oil, turpentine, benzene, gloss oil, or coal oil shall not be used in any of the materials for painting work.

1.09 WASTE MANAGEMENT AND DISPOSAL

A. Paint, stain and wood preservative finishes and related materials (thinners, solvents, etc.) are regarded as hazardous products and are subject to regulations for disposal. Obtain information on these controls from applicable government agencies having jurisdiction

B. All waste materials shall be separated and recycled. Where paint recycling is available, collect waste paint by type and provide for delivery to recycling or collection facility. Materials that cannot be reused must be treated as hazardous waste and disposed of in an appropriate manner

C. Set aside and protect surplus and uncontaminated finish materials not required by the Owner and deliver or arrange collection for verifiable re-use or re-manufacturing.

PART 2 PRODUCTS

2.01 PAINT MATERIALS - GENERAL

A. Material Compatibility: Provide block fillers, primers, and finish-coat materials that are compatible with one another and with the substrates indicated under conditions of service and application, as demonstrated by manufacturer based on testing and field experience.

B. Material Quality: Provide manufacturer's best-quality paint material of the various coating types specified that are factory formulated and recommended by manufacturer for application indicated.

1. Paint-material containers not displaying manufacturer's product identification will **NOT** be acceptable.

a. Interior paint: Recycled content paints and primers will not be permitted for interior application.

b. Toxicity/IEQ: Comply with applicable regulations regarding toxic and hazardous materials, and as specified.

C. Chemical Components of Interior Paints and Coatings: Provide products that comply with the following limits for VOC content when calculated according to 40 CFR 59, Subpart D (EPA Method 24) and the following chemical restrictions:

	Products	VOC Content
1.	Flat Paints, Coatings and Primers:	Not more that 50 g/L.
2.	Non-Flat Paints, Coatings and Primers:	Not more than 150 g/L
3.	Anti-Corrosive and Anti-Rust Paints Applied to Ferrous	Not more than 250 g/L

Metals:

4. Floor Coatings: Not more than 250 g/L
5. Stains: Not more than 250 g/L
6. Clear Wood Finishes, Varnishes and Sanding Sealers: Not more than 350 g/L
7. Clear Wood Finishes, Lacquers: Not more than 550 g/L
8. Exterior Flat Paints, Coatings and Primers: Not more than 100 g/L
9. Exterior Non-Flat Paints, Coatings and Primers: Not more than 150 g/L
10. Aromatic Compounds: Paints and coatings shall not contain more than 1.0 percent by weight of total aromatic compounds (hydrocarbon compounds containing one or more benzene rings).
11. Restricted Components: Paints and coatings shall not contain any of the following:
    a. Acrolein.
    b. Acrylonitrile.
    c. Antimony.
    d. Benzene.
    e. Butyl benzyl phthalate.
    f. Cadmium.
    g. Di (2-ethylhexyl) phthalate.
    h. Di-n-butyl phthalate.
    i. Di-n-octyl phthalate.
    j. 1,2-dichlorobenzene.
    k. Diethyl phthalate.
    l. Dimethyl phthalate.
    m. Ethylbenzene.
    n. Formaldehyde.
    o. Hexavalent chromium.
    p. Isophorone.
    q. Lead.
    r. Mercury.
    s. Methyl ethyl ketone.
    t. Methyl isobutyl ketone.
    u. Methylene chloride.
    v. Naphthalene.
    w. Toluene (methylbenzene).
    x. 1,1,1-trichloroethane.
    y. Vinyl chloride.

2.02 GERMICIDAL DETERGENT: (Use if mold and mildew has been found)

A. Approved Manufacturers:

1. "X-14 Professional Instant Mildew Stain Remover"; WD-40 Company (888-324-7596)
2. "Tilex Mold & Mildew Remover"; Clorox Co. (800-227-1860)
3. "Tilex Mildew Root Penetrator and Remover"; Clorox Co. (800-227-1860)

2.03 PROTECTIVE COATINGS

A. Bituminous Paint: Acid and alkali resistant type conforming to ASTM D1187.

B. Zinc Chromate Primer: Standard zinc chromate primer, selected from manufacturers listed in this Section.

C. Aluminum Pigmented Paint: Fibrated aluminum complying with ASTM D2824, Type IV.

D. Apply protective coating, bituminous paint, to isolate aluminum member as required.

2.04 PAINT SCHEDULE

A. Detailed specifications for the various surfaces are shown in the Paint Schedule. If these specifications conflict with the recommendations of the manufacturer, this discrepancy shall be brought to the attention of the Owner's Representative, the Owner's Representative shall decide which method shall be followed.

B. Refer to Paint Schedule at the end of this Section.

2.05 COLOR SAMPLES:

A. The Contractor shall furnish samples of all finishes in triplicate and obtain the approval of color match before starting work. Final colors must match exactly with the approved sample. Colors selection and quantity of different colors, as shown on Drawings, and approved by Owner's Representative.

B. Where a different manufacturer is utilized that product identified in Interior Finish Schedule, color must match listed name or number.

PART 3 EXECUTION

3.01 EXAMINATION

A. Examine substrates and conditions under which painting will be performed for compliance with requirements. Do not begin application until unsatisfactory conditions have been corrected.

1. Start of painting will be construed as Applicator's acceptance of surfaces and conditions within a particular area.

3.02 SURFACES TO BE COATED

A. Paint access doors, panels, registers, diffusers, light fixture trim, metal speaker covers and grilles the same color as adjacent surfaces. Paint access doors and panels in open position.

B. Paint interiors of ducts showing through registers and grilles flat black.

C. Paint prime coated or previously painted hinges the same as door frame to which they are attached.

D. Finish edges of doors to match faces.

E. Do not paint electrical device face plates or devices, sprinkler heads, smoke alarms or thermostats/covers.

F. Unless otherwise directed, remove and spray paint metal items/products that are removable such as vents, registers, access panels, covers, louvers and diffusers. Reinstall upon completion.

1. Replace broken, rusted or missing screws.

3.03 PREPARATION:

A. Remove hardware and hardware accessories, plates, machined surfaces, lighting fixtures, and items in place that are not to be painted, or provide protection prior to surface preparation and painting. Remove items if necessary for complete painting of the items and adjacent surfaces. Following completion of painting, reinstall items removed using workmen skilled in the trades involved.

B. Clean surfaces before applying paint or surface treatments. Schedule cleaning and painting so dust and other contaminants will not fall on wet, newly painted surfaces.

C. Provide protection for adjacent surfaces as necessary to prevent paint from coming into contact with adjacent materials not scheduled for painting.

D. Door Hardware and Signage:

1. Remove and clean.

2. Reinstall items being reused in same location after refinishing.

3. Leave hardware free of paint and in proper operating condition.

3.04 SURFACE PREPARATION:

A. Clean and prepare surfaces to be painted in accordance with manufacturer's instructions for each particular substrate condition. Notify Architect in writing of problems anticipated using specified finish coat material with substrates primed by others.

B. Cementitious Surfaces: Prepare concrete, concrete masonry, cement plaster and similar surfaces to be painted by removing efflorescence, chalk, dust, dirt, grease, oils, and release agents. Roughen as required to remove glaze.

1. Determine alkalinity and moisture content of surfaces to be painted. Do not paint surfaces where moisture content exceeds that permitted in manufacturer's printed directions.

2. If hardeners or sealers have been used to improve curing, use mechanical methods of surface preparation.

a. Use abrasive blast-cleaning methods if recommended by paint manufacturer.

b. Determine alkalinity and moisture content of surfaces by performing appropriate tests. If surfaces are sufficiently alkaline to cause the finish paint to blister and burn, correct this condition before application. Do not paint surfaces if moisture content exceeds that permitted in manufacturer's written instructions.

c. Clean concrete floors to be painted with a 5 percent solution of muriatic acid or other etching cleaner. Flush the floor with clean water to remove acid, neutralize with ammonia, rinse, allow to dry, and vacuum before painting.

3. At areas to receive epoxy paint, clean concrete with muriatic acid, wash per manufacturers recommendations.

C. Ferrous Metals: Clean non-galvanized ferrous metal surfaces that have not been shop-coated; remove oil, grease, dirt, loose mill scale and other foreign substances. Use solvent or mechanical cleaning methods that comply with recommendations of the Steel Structures Painting Council.

1. Touch-up shop-applied prime coats that have been damaged, and bare areas. Wire-brush, clean with solvents, and touch-up with the same primer as the shop coat.

2. At areas to receive epoxy paint, prepare steel surfaces to SSPC-SPII power tool clean.

D. Galvanized Surfaces: Utilize SSPC-SP1 solvent cleaning and chemical wash (tri-sodium phosphate). Power wash with tri-sodium phosphate type cleaner (5% solution at 140 degrees F.) and solvent clean after rinsing and drying with a non-petroleum based solvent cleaner so that surface is free of oil and surface contaminants. Remove pretreatment from galvanized sheet metal fabricated from coil stock, by mechanical methods.

1. Touch-up shop-applied prime coats that have been damaged, and bare areas. Wire-brush clean with solvents, and touch-up with the same primer as the shop coat.

E. Existing surfaces being repaired shall be primed before being finished in accordance with paint manufacturer's recommendation.

F. If mold and mildew is found, clean area with germicidal detergent following manufacturer's printed instructions.

3.05 MATERIALS PREPARATION:

A. Mix and prepare paint in accordance with manufacturer's directions.

B. Stir material before application to produce a mixture of uniform density; stir as required during application. Do not stir surface film into material. Remove film and, if necessary, strain before using.

C. Use only thinners approved by manufacturer, and only within recommended limits.

3.06 APPLICATION:

A. Apply paint in accordance with manufacturer's directions. Use applicators and techniques best suited for substrate and type of material being applied. Do not paint over dirt, rust, scale, grease, moisture, scuffed surfaces, or conditions detrimental to formation of a durable paint film.

B. Paint colors, surface treatments, and finishes are indicated in "schedules."

C. The number of coats and film thickness required is the same regardless of application method. Do not apply succeeding coats until previous coat has cured. Sand between applications where required to produce a smooth, even surface. Apply additional coats when undercoats or other conditions show through final coat, until paint film is of uniform finish, color, and appearance.

D. The term "exposed surfaces" includes areas visible when permanent or built-in items are in place. Extend coatings in these areas to maintain system integrity and provide desired protection.

E. Paint back sides of access panels and removable or hinged covers to match exposed surfaces.

F. Omit primer on metal surfaces that have been shop-primed, unless primer becomes worn, damaged, or more than six months old from date of delivery to job site.

G. Paint all edges of every door to match faces, including top and bottoms.

3.07 MINIMUM COATING THICKNESS:

A. Apply materials at the manufacturer's recommended spreading rate. Provide total dry film thickness of the system as recommended by the manufacturer.

3.08 BLOCK FILLERS:

A. Apply block fillers at a rate to ensure complete coverage with pores filled.

3.09 PRIME COATS:

A. Before application of finish coats, apply a prime coat as recommended by the manufacturer to material required to be painted or finished, and has not been prime coated by others.

B. Tinting of primers will not be permitted.

C. Re-coat primed and sealed substrates where there is evidence of suction spots or unsealed areas in the first coat to assure a finish coat with no burn-through or other defects due to insufficient sealing.

D. Back Priming:

1. All wood trim shall be back primed before installation. Spot prime all ends of trim.

3.10 BRUSH APPLICATION:

A. Brush-out and work brush coats into surfaces in an even film. Eliminate cloudiness, spotting, holidays, laps, brush marks, runs, sags, ropiness, or other surface imperfections. Draw neat glass lines and color breaks. Apply primers and first coats by brush unless manufacturer's instructions permit use of mechanical applicators.

3.11 ROLLER APPLICATION

A. Rollers: Use rollers of carpet, velvet-back, or high-pile sheep's wool as recommended by manufacturer for material and texture required.

3.12 MECHANICAL APPLICATIONS:

A. Mechanical methods for paint application will ONLY be permitted by written permission of the Architect. All suite entry doors must be brush applied.

3.13 FIELD QUALITY CONTROL

A. Match approved samples for color, texture and coverage. Remove, refinish or repaint work not in compliance with specified requirements.

B. Where touch-ups occur, match color and sheen of existing surface. Touch-ups must blend invisibly, or painting must be extended to nearest corner or other termination point, as acceptable to the Owner's Representative.

C. Painted exterior and interior surfaces shall be considered to lack uniformity and soundness if any of the following defects are apparent to the Owner's Representative:

1. Brush / roller marks, streaks, laps, runs, sags, drips, heavy stippling, hiding or shadowing by inefficient application methods, skipped or missed areas, and foreign materials in paint coatings.

2. Evidence of poor coverage at rivet heads, plate edges, lap joints, crevices, pockets, corners and re-entrant angles.

3. Damage due to touching before paint is sufficiently dry or any other contributory cause.

4. Damage due to application on moist surfaces or caused by inadequate protection from the weather.

5. Damage and/or contamination of paint due to blown contaminants (dust, spray paint, etc.).

6. Visible defects are evident on vertical surfaces when viewed at normal viewing angles from a distance of not less than 48".

7. Visible defects are evident on horizontal surfaces when viewed at normal viewing angles from a distance of not less than 48".

8. Visible defects are evident on ceiling, soffit and other overhead surfaces when viewed at normal viewing angles.

9. When the final coat on any surface exhibits a lack of uniformity of color, sheen, texture, and hiding across full surface area.

D. Owner reserves the right to invoke the following test procedure at any time and as often as Owner deems necessary during the period when paint is being applied:

1. Owner will engage a qualified independent testing agency to sample paint material being used. Samples of material delivered to Project will be taken, identified, sealed, and certified in the presence of Contractor.
2. Testing agency will perform appropriate tests for the following characteristics as required by Owner:
   a. Dry Film Thickness.
   b. Volume Solids
   c. Content of the material actually delivered to the site as compared to the product's published label analysis
3. Owner may direct Contractor to stop painting if test results show material being used does not comply with specified requirements. Contractor shall remove noncomplying paint from Project site, pay for testing, and repaint surfaces previously coated with the noncomplying paint. If necessary, Contractor may be required to remove noncomplying paint from previously painted surfaces if, on repainting with specified paint, the two coatings are incompatible.

3.14 CLEANING

A. At the end of each work day, remove empty cans, rags, rubbish, and other discarded paint materials from the site.
   1. Clean equipment and dispose of wash water / solvents as well as all other cleaning and protective materials (e.g. rags, drop cloths, masking papers, etc.), paints, thinners, paint removers / strippers in accordance with the safety requirements of authorities having jurisdiction

B. Upon completion of painting, clean glass and paint-spattered surfaces. Remove spattered paint by washing, scraping, or other proper methods, using care not to scratch or damage adjacent finished surfaces.

C. Protect work of other trades, whether to be painted or not, against damage from painting. Correct damage by cleaning, repairing or replacing, and repainting, as acceptable to Architect.

D. Provide "Wet Paint" signs to protect newly-painted finishes. Remove temporary protective wrappings provided by others for protection of their work after completion of painting operations. At completion of construction activities of other trades, touch-up and restore damaged or defaced painted surfaces.

END OF SECTION 09 90 00

PAINT SCHEDULE

DESCRIPTION				MANUFACTURER											
				SHERWIN-WILLIAMS				BENJAMIN MOORE				GLIDDEN PROFESSIONAL			
Type & Surface	Luster	Max VOC Content[2] (g/L)	No. of Coats	Products	Dry Mil Thickness (Per Coat)	GS-11[1] (Y or N)	VOC[2] (g/L)	Products	Dry Mil Thickness (Per Coat)	GS-11[1] (Y or N)	VOC[2] (g/L)	Products	Dry Mil Thickness (Per Coat)	GS-11[1] (Y or N)	VOC[2] (g/L)
1. Interior Ferrous Metal (Not Galvanized and Shop Primed)	Acrylic Latex Semi-Gloss	250	1	Pro Industrial Pro-Cryl Universal Primer (B66W310)	3.00	Y	<100	Acrylic Metal Primer (M04)	1.50	N	52	Devflex WB PF DTM Primer & Finish (4020)	2.20-3.50	Y	91
		150	2	ProClassic Waterborne Acrylic Semi-Gloss (B31 Series)	1.30	Y	147	Eco Spec Interior Latex Semi Gloss Enamel (224)	1.40	Y	0	Dulux Advanced Oil Semi-Gloss Wall & Trim Enamel (1506)	1.50-2.00	Y	48
2. Interior Ferrous Metal (Galvanized)	Acrylic Latex Semi-Gloss	250	1	Pro Industrial Pro-Cryl Universal Primer (B66W310)	3.00	Y	<100	Eco Spec Interior Latex Primer Sealer (231)	1.00	Y	0	Devflex WB PF DTM Primer & Finish (4020)	2.20-3.50	Y	91
		150	2	ProClassic Waterborne Acrylic Semi-Gloss (B31 Series)	1.30	Y	147	Eco Spec Interior Latex Semi Gloss Enamel (224)	1.40	Y	0	Dulux Advanced Oil Semi-Gloss Wall & Trim Enamel (1506)	1.50-2.00	Y	48
3. Interior Ferrous Metal (Previously Painted - Not Galvanized)	Acrylic Latex Semi-Gloss	250	1	Pro Industrial Pro-Cryl Universal Primer (B66W310)	3.00	Y	<100	Eco Spec Interior Latex Primer Sealer (231)	1.00	Y	0	Devflex WB PF DTM Primer & Finish (4020)	2.20-3.50	Y	91
(Note: Spot prime as required)		150	2	ProClassic Waterborne Acrylic Semi-Gloss (B31 Series)	1.30	Y	147	Eco Spec Interior Latex Semi Gloss Enamel (224)	1.40	Y	0	Dulux Advanced Oil Semi-Gloss Wall & Trim Enamel (1506)	1.50-2.00	Y	48
4. Interior Pipes, Ductwork, & Mechanical Equipment (Not Galvanized)	Acrylic Latex Eggshell	150	1	Pro Industrial Pro-Cryl Universal Primer (B66W310)	3.00	Y	<100	Fresh Start All-Purpose 100% Acrylic Primer (023)	1.20	N	49	Devflex WB PF DTM Primer & Finish (4020)	2.20-3.50	Y	91
		150	1	ProGreen 200 Interior Latex Eg-Shel (B20-600 Series)	1.70	Y	41	Eco Spec Interior Latex Eggshell Enamel (223)	1.40	Y	0	Dulux Pro Standard Interior Eggshell Wall and Trim Paint	1.50	Y	45

DESCRIPTION				MANUFACTURER											
				SHERWIN-WILLIAMS				BENJAMIN MOORE				GLIDDEN PROFESSIONAL			
Type & Surface	Luster	Max VOC Content[2] (g/L)	No. of Coats	Products	Dry Mil Thickness (Per Coat)	GS-11[1] (Y or N)	VOC[2] (g/L)	Products	Dry Mil Thickness (Per Coat)	GS-11[1] (Y or N)	VOC[2] (g/L)	Products	Dry Mil Thickness (Per Coat)	GS-11[1] (Y or N)	VOC[2] (g/L)
5. Interior Pipes, Ductwork, & Mechanical Equipment (Galvanized)	Acrylic Latex Eggshell	150	1	Pro Industrial Pro-Cryl Universal Primer (B66W310)	3.00	Y	<100	Eco Spec Interior Latex Primer Sealer (231)	1.00	Y	0	Devflex WB PF DTM Primer & Finish (4020)	2.20-3.50	Y	91
		150	1	ProGreen 200 Interior Latex Eg-Shel (B20-600 Series)	1.70	Y	41	Eco Spec Interior Latex Eggshell Enamel (223)	1.40	Y	1	Dulux Pro Standard Interior Eggshell Wall and Trim Paint	1.50	Y	45
6. Interior Gypsum Board (New)	Acrylic Latex Eggshell	150	1	ProGreen 200 Interior Latex Primer (B28W600 Series)	1.50	Y	43	Eco Spec Interior Latex Primer Sealer (231)	1.00	Y	0	Prep & Prime PVA Wall Interior Water-Based Primer (1030-1200)	1.50	Y	100
		150	2	ProGreen 200 Interior Latex Eg-Shel (B20-600 Series)	1.70	Y	41	Eco Spec Interior Latex Eggshell Enamel (223)	1.40	Y	0	Dulux Pro Standard Interior Eggshell Wall and Trim Paint	1.50	Y	45
7. Interior Gypsum Board (New)	Acrylic Latex Flat	50	1	ProGreen 200 Interior Latex Primer (B28W600 Series)	1.50	Y	43	Eco Spec Interior Latex Primer Sealer (231)	1.00	Y	0	Prep & Prime PVA Wall Interior Water-Based Primer (1030-1200)	1.50	Y	100
		50	2	ProGreen 200 Interior Latex Flat (B30-600 Series)	1.80	Y	48	Eco Spec Interior Latex Flat (219)	1.20	Y	0	Dulux Pro Standard Interior Flat Wall and Ceiling Paint (1221)	1.50	Y	50
8. Interior Gypsum Board or Plaster (New)	Acrylic Latex Eggshell	150	1	Harmony Interior Latex Primer (B11W900)	1.30	Y	0	Eco Spec Interior Latex Primer Sealer (231)	1.00	Y	0	Prep & Prime Odor-Less Interior Water-Based Primer-Sealer (LM9116)	1.30	Y	0

DESCRIPTION				MANUFACTURER											
				SHERWIN-WILLIAMS				BENJAMIN MOORE				GLIDDEN PROFESSIONAL			
Type & Surface	Luster	Max VOC Content[2] (g/L)	No. of Coats	Products	Dry Mil Thickness (Per Coat)	GS-11[1] (Y or N)	VOC[2] (g/L)	Products	Dry Mil Thickness (Per Coat)	GS-11[1] (Y or N)	VOC[2] (g/L)	Products	Dry Mil Thickness (Per Coat)	GS-11[1] (Y or N)	VOC[2] (g/L)
		150	2	Harmony Interior Latex Eg-Shel (B9 Series)	1.60	Y	0	Eco Spec Interior Latex Eggshell Enamel (223)	1.40	Y	0	Dulux Lifemaster Eggshell Interior Latex Enamel (9030)	1.60	Y	0
9a. Interior Gypsum Board or Plaster (Previously Painted)	Acrylic Latex Eggshell	150	1	ProGreen 200 Interior Latex Primer (B28W600 Series)	1.50	Y	43	Eco Spec Interior Latex Primer Sealer (231)	1.00	Y	0	Prep & Prime PVA Wall Interior Water-Based Primer (1030-1200)	1.50	Y	100
		150	2	Duration Home Interior Latex Satin (A97-100 Series)	1.50	Y	37	Eco Spec Interior Latex Eggshell Enamel (223)	1.40	Y	0	Dulux Lifemaster Eggshell Interior Latex Enamel (9030)	1.60	Y	0
9b. Interior Gypsum Board or Plaster (Previously Painted)	Acrylic Latex Eggshell	150	1	ProGreen 200 Interior Latex Primer (B28W600 Series)	1.50	Y	43					Prep & Prime PVA Wall Interior Water-Based Primer (1030-1200)	1.50	Y	100
		150	2	ProGreen 200 Interior Latex Eg-Shel (B20-600 Series)	1.70	Y	41	Aura Eggshell Waterborne Interior Paint (0524) *Self Priming - No Primer Required*	1.80	Y	48	Dulux Pro Standard Interior Latex Eggshell (1423)	1.50	Y	45
10a. Interior Gypsum Board or Plaster (New or Previously Painted)	Acrylic Latex Satin	150	1	ProGreen 200 Interior Latex Primer (B28W600 Series)	1.50	Y	43	Eco Spec Interior Latex Primer Sealer (231)	1.00	Y	0	Prep & Prime Interior Vapor Barrier Water-Based Primer-Sealer (1060-1200)	1.36	Y	85
		150	2	Duration Home Interior Latex Satin (A97-100 Series)	1.50	Y	37	Eco Spec Interior Latex Eggshell Enamel (223)	1.40	Y	0	Dulux Lifemaster Eggshell Interior Latex Enamel (9030)	1.60	Y	0

DESCRIPTION				MANUFACTURER											
				SHERWIN-WILLIAMS				BENJAMIN MOORE				GLIDDEN PROFESSIONAL			
Type & Surface	Luster	Max VOC Content[2] (g/L)	No. of Coats	Products	Dry Mil Thickness (Per Coat)	GS-11[1] (Y or N)	VOC[2] (g/L)	Products	Dry Mil Thickness (Per Coat)	GS-11[1] (Y or N)	VOC[2] (g/L)	Products	Dry Mil Thickness (Per Coat)	GS-11[1] (Y or N)	VOC[2] (g/L)
10b. Interior Gypsum Board or Plaster (New or Previously Painted)	Acrylic Latex Satin	150	1	ProGreen 200 Interior Latex Primer (B28W600 Series)	1.50	Y	43					Prep & Prime Interior Vapor Barrier Waterbased Primer-Sealer (1060-1200)	1.36	Y	85
		150	2	ProGreen 200 Interior Latex Eg-Shel (B20-600 Series)	1.70	Y	41	Aura Eggshell Waterborne Interior Paint (0524) *Self Priming - No Primer Required*	1.80	Y	48	Dulux Pro Standard Interior Eggshell Wall and Trim Paint (1423)	1.50	Y	45
11a. Interior Gypsum Board or Plaster (Except at Indoor Shower and Locker Rm. and Not exposed to Water)	Acrylic Latex Eggshell	150	2					Aura Eggshell Waterborne Interior Paint (0524) *Self Priming - No Primer Required*	1.80	Y	48				
11b. Interior Gypsum Board or Plaster (Except at Indoor Shower amd locker Rm and Not exposed to Water)	Epoxy Eggshell		1	ProGreen 200 Interior Latex Primer (B28W600 Series)	1.50	Y	43					Prep & Prime PVA Wall Interior Water-Based Primer (1030-1200)	1.50	Y	100
			2	Water Based Catalyzed Epoxy (B70-200 Series)	2.50 - 3.00	Y	200					Tru-Glaze-WB Waterborne Epoxy Semi-Gloss Coating (4406)	2.00-5.00	N	200
12a. Interior Gypsum Board or Plaster (Indoor Shower and Locker Rm. Doors and Frames ONLY)	Acrylic Latex Satin	150	1	ProGreen 200 Interior Latex Primer (B28W600 Series)	1.50	Y	43	Aura Satin Waterborne Interior Paint (0526) *Self Priming - No Primer Required*	1.50	Y	48				

DESCRIPTION				MANUFACTURER											
				SHERWIN-WILLIAMS				BENJAMIN MOORE				GLIDDEN PROFESSIONAL			
Type & Surface	Luster	Max VOC Content[2] (g/L)	No. of Coats	Products	Dry Mil Thickness (Per Coat)	GS-11[1] (Y or N)	VOC[2] (g/L)	Products	Dry Mil Thickness (Per Coat)	GS-11[1] (Y or N)	VOC[2] (g/L)	Products	Dry Mil Thickness (Per Coat)	GS-11[1] (Y or N)	VOC[2] (g/L)
		150	2	Pro Industrial 0 VOC Acrylic Semi-Gloss (B66-600 Series)	2.50	Y	0	Aura Satin Waterbome Interior Paint (0526)	1.50	Y	48				
12b. Interior Gypsum Board or Plaster (Indoor shower and locker rooms Doors and Frames ONLY)	Epoxy Satin	150	1	PrepRite Bonding Primer (B51W50)	1.70	Y	42					Prep & Prime Gripper Multi-Purpose Interior/Exterior Water-Based Primer Sealer (2210-1200)	1.50-2.00	Y	99
		150	2	Water Based Catalyzed Epoxy (B70-200 Series)	2.50 - 3.00	Y	200					Tru-Glaze-WB Waterbome Epoxy Gloss Coating (4408)	2.00-5.00	N	206
13. Interior Plaster (New)	Acrylic Latex Eggshell	150	1	PrepRite ProBlock Int/Ext Latex Primer Sealer (B51W20)	1.40	Y	97					Prep & Prime Gripper Multi-Purpose Interior/Exterior Water-Based Primer Sealer (2210-1200)	1.50-2.00	Y	99
		150	2	ProGreen 200 Interior Latex Eg-Shel (B20-600 Series)	1.70	Y	41	Aura Eggshell Waterbome Interior Paint (0524) *Self Priming - No Primer Required*	1.80	Y	48	Dulux Pro Standard Interior Eggshell Wall and Trim Paint (1423)	1.50	Y	45
14. Interior Concrete Masonry Units Walls or Concrete Walls/Ceilings	Acrylic Latex Semi-Gloss	150	2	PrepRite Block Filler Int/Ext Latex (B25W25)	8.00	Y	45	Moorcraft SuperSpec Satin Fil (172)	5.00	N	31	Prep & Prime Block Filler Interior/Exterior Masonry Water-Based Primer (3010-1200)	10.00	Y	61

DESCRIPTION				MANUFACTURER											
				SHERWIN-WILLIAMS				BENJAMIN MOORE				GLIDDEN PROFESSIONAL			
Type & Surface	Luster	Max VOC Content[2] (g/L)	No. of Coats	Products	Dry Mil Thickness (Per Coat)	GS-11[1] (Y or N)	VOC[2] (g/L)	Products	Dry Mil Thickness (Per Coat)	GS-11[1] (Y or N)	VOC[2] (g/L)	Products	Dry Mil Thickness (Per Coat)	GS-11[1] (Y or N)	VOC[2] (g/L)
		150	1	ProGreen 200 Interior Latex Semi-Gloss (B31-600 Series)	1.60	Y	47	Aura Semi-Gloss Waterborne Interior Paint (0528)	1.50	Y	47	Dulux Pro Standard Interior Semi-Gloss Wall & Trim Paint (1427)	1.30	Y	49
15. Interior Concrete Masonry Units Walls or Concrete Walls/Ceilings (Except Interior shower and locker locations)	Epoxy Eggshell		1	PrepRite Block Filler Int/Ext Latex (B25W25)	8.00	Y	45	Moorcraft SuperSpec Satin Fil (172)	5.00	N	31	Prep & Prime Block Filler Interior/Exterior Masonry Water-Based Primer (3010-1200)	10.00	Y	61
			2	Water Based Catalyzed Epoxy (B70-200 Series)	2.50 - 3.00	Y	200	Aura Eggshell Waterborne Interior Paint (0524)	1.80	Y	48	Tru-Glaze-WB Waterborne Epoxy Semi-Gloss Coating (4406)	2.00-5.00	N	200
16. Interior Concrete Masonry Units Walls or Concrete Walls/Ceilings (Interior shower and locker locations)	Epoxy Satin		1	Cement-Plex 875 (B42W200 /B42V201)	13.00 - 20.00	N	>200	Moorcraft SuperSpec Satin Fil (172)	5.00	N	31	Ultra Hide Blockaid Interior/Exterior Masonry Filler (3110-1200)	8.00-25.00	Y	0
(Note: Block Filler to flush joints in masonry)			2	Pro Industrial Hi-Bild Waterbased Catalyzed Epoxy (B71-100)	2.50 - 3.00	N	<250	Aura Satin Waterborne Interior Paint (0526)	1.50	Y	48	Tru-Glaze-WB Waterborne Epoxy Semi-Gloss Coating (4406)	2.00-5.00	N	200
22a. Exterior Galvanized Ferrous Metal & Ductwork (Galvanized and Not Galvanized)	Acrylic Gloss Enamel	150	1	Pro Industrial 0 VOC Acrylic Semi-Gloss (B66-600 Series)	3.00	Y	0	Acrylic Metal Primer (M04) (As Required)	1.50	N	52	Devflex WB PF DTM Primer & Flat Finish (4020)	2.20-3.50	Y	91
		150	2	Pro Industrial 0 VOC Acrylic Semi-Gloss (B66-600 Series)	3.00	Y	0	Aura Waterborne Exterior Paint Semi-Gloss (0632)	1.50	Y	46	Devflex Gloss DTM Waterborne Acrylic Enamel (659S)	2.00-4.00	Y	100

DESCRIPTION				MANUFACTURER											
				SHERWIN-WILLIAMS				BENJAMIN MOORE				GLIDDEN PROFESSIONAL			
Type & Surface	Luster	Max VOC Content[2] (g/L)	No. of Coats	Products	Dry Mil Thickness (Per Coat)	GS-11[1] (Y or N)	VOC[2] (g/L)	Products	Dry Mil Thickness (Per Coat)	GS-11[1] (Y or N)	VOC[2] (g/L)	Products	Dry Mil Thickness (Per Coat)	GS-11[1] (Y or N)	VOC[2] (g/L)
22b. Exterior Galvanized Ferrous Metal & Ductwork (Galvanized and Not Galvanized)	Acrylic Gloss Enamel	150	1					Acrylic Metal Primer (M04) (As Required)	1.50	N	52				
		150	2					DTM Acrylic Gloss Enamel (M28)	2.50	N	221				

Note 1. Paints, coatings and primers meet or exceed the VOC and chemical component limits of Green Seal Standard GS-11 (First Edition May 20, 1993) requirements.

Note 2. VOC content when calculated according to 40 CFR 59, Subpart D (EPA Method 24). Clear wood finishes, floor coatings, stains, and shellacs do not exceed the VOC limits of the South Coast Air Quality Management District (SCAQMD) Rule 1113, Architectural Coatings (in effect January 1, 2004). VOC Levels shown are unthinned without colorants, actual levels may vary based on colors used.

SECTION 10 14 00
SIGNAGE

PART 1 GENERAL

1.01 SUMMARY

A. Section Includes:

1. Exterior graphic plaques

1.02 REFERENCES

A. Reference American National Standard for Buildings and Facilities Providing Accessibility and Useability for Physically Handicapped People as published by the American National Standards Institute, Inc. – ANSI A117.1.

1.03 SUBMITTALS

A. General: Submit the following in accordance with Conditions of Contract and Division 01 Specification Sections:

1. A copy of the manufacturer's printed installation manual shall accompany Bid for review and approval by the Owner's Representative.

2. Shop Drawings showing sign layout, lettering style, materials, and other pertinent information.

1.04 QUALITY ASSURANCE

A. Graphic signs, including materials, fabrication, mounting and installation, shall conform to state and local code regulations and requirements.

B. All items shall utilize the highest standards of professional workmanship and practices.

1.05 DELIVERY, STORAGE AND HANDLING

A. Coordinate delivery of materials comprising the complete graphics package. Store materials upon approval of Owner. Take precautions to protect materials and be responsible for same until installed, inspected and accepted in writing by Owner.

1.06 PROJECT CONDITIONS

A. Inspection:

1. Examine areas for conditions detrimental to completion of the delivery and installation work. Report findings to the Owner's Representative immediately. Do not proceed with work until unsatisfactory conditions have been corrected or until advised in writing by the Owner.

2. Starting work constitutes acceptance of conditions under which the work is to be performed. After such acceptance Contractor shall, at his own expense, be responsible for correcting all unsatisfactory and defective work resulting from such unsatisfactory conditions.

B. Coordinate work with all trades affected by Contractor's work and be fully cognizant of their requirements as pertaining to Contractor's work.

C. Perform all cutting and fitting necessary for installation and completion of the work while accommodating the work of other trades. Immediately repair damage to existing surfaces or finishes caused by work of this Contractor at no cost to Owner.

1.07 WARRANTIES

A. All materials, finishes and workmanship shall be warranted for a period of two (2) years after final acceptance of the work. If during the warranty period, any defects or faulty materials are found, the Contractor shall immediately proceed at his own expense to replace and/or repair same at not cost to Owner.

PART 2 PRODUCTS

2.01 SIGNAGE MANUFACTURER/FABRICATOR

A. Basis of Design Product: Subject to compliance with requirements provide "EmBoss Series Signage"; by ASI Sign Systems, Inc. (216-831-1345) or by one of the following:

1. ASI Sign Systems, Inc. (216-831-1345)
2. APCO Graphics, Inc. (877-988-2726)
3. Beyond Signs Inc. (718-476-6500)
4. Creative Sign Solutions Inc. (901-386-3865)
5. Forms + Surfaces (aka Cornelius Signage) (800-451-0410)
6. Approved Substitution

2.02 MATERIALS

A. Acrylic: Produced by Rohm and Haas or approved substitution. Acrylic shall be cut straight and true, free of saw marks, burrs, scratches or other imperfections.

1. Acrylic Sheet: ASTM D 4802, Category A-1 (cell-cast sheet), Type UVA (UV absorbing).

B. Signs: Produced by photographic silk-screen stencils unless otherwise noted. Hand-cut, frisketed, or die-cut images will not be accepted.

C. Silk-screening inks: As manufactured by one of the following:

1. Approved Manufacturers:

a. Naz-Dar Company (800-767-9942)

b. Approved substitution

2.03 ACRYLIC SIGNAGE

A. Tactile and Braille Sign: Manufacturer's standard process for producing text and symbols complying with ADA-ABA Accessibility Guidelines and with ICC/ANSI A117.1. Text shall be accompanied by Grade 2 Braille. Produce precisely formed characters with square-cut edges free from burrs and cut marks; Braille dots with domed or rounded shape.

1. Overall Panel Size: 8-inches x 8-inches
2. Shape: Square
3. Corners: Square
4. Panel Material: Opaque acrylic sheet Photopolymer.
5. Background Color: As selected by Architect from Manufacturer's full range.
6. Text Color: White
7. Raised-Copy Thickness: Not less than 1/32 inch.

B. Mounting:

1. Install signage to substrate with black vinyl double-stick tape and clear silicone adhesive unless noted otherwise.
2. Where indicated provide mechanical fasteners with countersunk holes for tamperproof screws and expansion anchors.

PART 3 EXECUTION

3.01 EXAMINATION:

A. Site Verification of Conditions: Verify installation conditions previously established under other sections are acceptable for product installation in accordance with manufacturer's instructions.

B. Verify that substrate and conditions are prepared and ready for product installation. Proceeding with installation implies installer's acceptance of substrate and conditions.

3.02 INSTALLATION

A. Signage: Install product in accordance with supplier's instructions and as follows:

1. Install signs specified herein in accordance with schedule requirements at the end of this Section.

2. Coordinate installation with Owner.

3. Install product at heights to conform to Americans with Disabilities Act Accessibility Guidelines (ADAAG) and applicable local amendments and regulations.

a. Mounting heights: Install signage 5'-0" above finish floor to center line of plaque on the lever side of room door.

4. Install product level, plumb, and true.

5. Items shall be inspected, adjusted and cleaned after final installation. Use protective coating over installed product if other work is ongoing at time of installation completion.

6. Install signs in accordance with manufacturer's recommendations:

3.03 CLEANING

A. Repair scratches and other damage which might have occurred during installation. Replace components where repairs were made but are still visible to the unaided eye from a distance of 10 feet.

B. Remove temporary coverings and protection to adjacent work areas. Clean installed products in accordance with manufacturer's instructions prior to Owner's acceptance.

C. Provide cleanup and removal of construction debris resulting from the installation work from project in accordance with provisions in Division 1.

PART 4 SCHEDULE

4.01 SIGNAGE SCHEDULE

A. Restroom Signage:

1. As indicated on drawings.

END OF SECTION 10 14 00

SECTION 10 21 13
TOILET COMPARTMENTS

PART 1 GENERAL

1.01 SUMMARY

A. Section Includes:

1. Extent of toilet partitions is indicated on Drawings.
2. Styles of toilet compartments include:
   a. Solid polymer toilet compartments Floor-Anchored, Overhead Braced
3. Styles of Screens include:
   a. Solid polymer Urinal Screens, Floor-Anchored

B. Related Sections:

1. Section 04 20 00 – Unit Masonry
2. Section 10 28 00 - Toilet, Bath, and Laundry Accessories

1.02 REFERENCES

A. ASTM International (ASTM) Publications:

1. E84 "Standard Test Method for Surface Burning Characteristics of Building Materials"

1.03 SUBMITTALS

A. General: Submit the following in accordance with Conditions of Contract and Division 01 Specification Sections:

1. Product Data: Submit manufacturer's detailed technical data for materials, fabrication, and installation, including catalog cuts of anchors, hardware, fastenings, and accessories.
2. Shop Drawings: Submit shop drawings for fabrication and erection of toilet partition assemblies not fully described by product drawings, templates, and instructions for installation of anchorage devices built into other work.

1.04 QUALITY ASSURANCE

A. Field Measurements: Take field measurements prior to preparation of shop drawings and fabrication where possible, to ensure proper fitting of work. However, allow for adjustments within specified tolerances wherever taking field measurements before fabrication might delay work.

B. Coordination: Furnish inserts and anchorages which must be built into other work for installation of toilet partitions and related work; coordinate delivery with other work to avoid delay.

C. Fire-Test-Response Characteristics: Where fire-retardant materials or products are indicated, provide materials and products with specified fire-test-response characteristics as determined by testing identical products per test method indicated by UL, ITS, or another testing and inspecting agency acceptable to authorities having jurisdiction. Identify with appropriate markings of applicable testing and inspecting agency in the form of separable paper label or, where required by authorities having jurisdiction, imprint on surfaces of materials that will be concealed from view after installation.

1.05 DELIVERY, STORAGE, AND HANDLING

A. Do not deliver solid polymer materials until painting and similar operations that could damage synthetic marble have been completed in installation areas. If cast polymer materials must be stored in other than installation areas, store only in areas where environmental conditions comply with requirements specified in "Project Conditions" Article.

B. Handle materials to prevent damage to finished surfaces. Provide protective coverings to prevent physical damage or staining following installation for duration of project.

1.06 PROJECT CONDITIONS

A. Environmental Limitations: Do not deliver or install solid polymer materials until building is enclosed, wet work is complete, and HVAC system is operating and maintaining temperature and relative humidity at occupancy levels during the remainder of the construction period.

B. Field Measurements: Where cast polymer materials are indicated to fit to other construction, verify dimensions of other construction by field measurements before fabrication and indicate measurements on Shop Drawings. Coordinate fabrication schedule with construction progress to avoid delaying the Work.

1. Locate concealed framing, blocking, and reinforcements that support cast polymer materials work by field measurements before being enclosed and indicate measurements on Shop Drawings.

1.07 SPECIAL WARRANTY

A. Cast polymer materials:

1. Provide fifteen (15) year Warranty against manufacturing defects.

PART 2 PRODUCTS

2.01 MANUFACTURERS

A. Approved Manufacturers:

1. Accurate Partitions Corp. (708-442-6800)

a. Toilet Comp: "Solid Plastic (HDPE) Floor Mounted Overhaed Braced Toilet Compartments"

b. Urinal Screens: Solid Plastic (HDPE) Floor mounted Urinal Screens

2. Bradley Corporation (800-727-3539)

a. Toilet Compartments: Sentinel, Solid Plastic (HDPE) Bradmar Floor Anchored Overhead Braced Toilet Compartments, Series 400

b. Urinal Screens: Solid Plastic (HDPE) Bradmar Floor mounted Urinal Screens

3. Knickerbocker Partition Corp. (516-546-0550)

a. Toilet Comp: "Metropolitan Style, Plastique SP (HDPE) Toilet Compartments"

b. Urinal Screens: Floor mounted (HDPE) Floor mounted Urinal Screens.

4. Metpar Corporation (888-638-7271)

a. Toilet Compartments: Polly Solid Plastic (HDPE) Toilet Enclosures"Corinthian FP-500"

b. Urinal Screens: Polly Solid Plastic (HDPE) Type "PF" Wall and Floor Mounted

5. Global Steel Products Corporation (516-586-3330)

a. Toilet Compartments: HDPE Solid Polymer Floor Anchored Overhead Braced

b. Urinal Screens: HDPE Solid Polymer Floor mounted

6. Sanymetal, a Crane Plumbing Co. (800-832-7994)

   a. Toilet Compartments: "Academy" Sanypoly Solid Polymer Floor Anchored Overhead Braced

   b. Urinal Screens: Type "BX" Solid Polymer Floor Mounted

7. Hadrian Mfg., Inc. (440-974-7120)

   a. Toilet Compartments: "Headrail Braced Solid Plastic Toilet Partitions"

   b. Urinal Screens: Solid Plastic Floor mounted

2.02 SOLID-POLYMER UNITS

A. Toilet-Enclosure Style: Floor Mounted Overhead braced.

B. Urinal-Screen Style: Floor Mounted

C. Door, Panel, Screen, and Pilaster Construction: Solid, high-density polyethylene (HDPE) panel material, not less than 1 inch thick, seamless, with eased edges, and with homogenous color and pattern throughout thickness of material.

   1. Integral Hinges: Configure doors and pilasters to receive integral hinges.

   2. Heat-Sink Strip: Manufacturer's standard continuous, extruded-aluminum or stainless-steel strip fastened to exposed bottom edges of solid-polymer components to prevent burning.

D. Pilaster Shoes and Sleeves (Caps): Manufacturer's standard design; stainless steel.

E. Urinal-Screen Post: Manufacturer's standard post design of material matching the thickness and construction of pilasters.

F. Brackets (Fittings):

   1. Stirrup Type: Ear or U-brackets, clear-anodized aluminum or stainless steel.

2.03 MATERIALS

A. General: Provide materials which have been selected for surface flatness and smoothness. Exposed surfaces which exhibit pitting, seam marks, roller marks, stains, discolorations, or other imperfections on finished units are not acceptable.

B. Fire Rating:

   1. Subject to compliance with requirements, all products shall be compliance with ASTM E84 meeting the required Flame Spread Class Rating.

      a. Flame Spread: Class B - 26 - 75

      b. Smoke Development: 450 or less

C. Concealed Anchorage Reinforcement: Minimum 12 gauge galvanized steel sheet.

D. Concealed Tapping Reinforcement: Minimum 14 gauge galvanized steel sheet.

E. Pilaster Shoes: ASTM A167, Type 304 stainless steel, not less than 3" high, 20-gauge, finished to match hardware.

F. Stirrup Brackets: Manufacturer's standard design for attaching panels to walls and pilasters, either anodized aluminum or stainless steel.

G. Hardware and Accessories: Manufacturer's standard design, heavy-duty operating hardware and accessories of stainless steel.

   1. Anchorages and Fasteners: Manufacturer's standard exposed fasteners of stainless steel, finished to match hardware, with theft-resistant type heads and nuts. For

concealed anchors, use hot-dip galvanized, cadmium-plated, or other rust-resistant protective-coated steel.

H. Overhead Bracing: Continuous extruded aluminum, antigrip profile, with clear anodized finish.

2.04 FABRICATION

A. General: Furnish standard doors, panels, and pilasters fabricated for partition system, unless otherwise indicated. Furnish units with cutouts, drilled holes, and internal reinforcement to receive partition-mounted hardware, accessories, and grab bars, as indicated. Fabricate to fit dimensions shown on Drawings.

B. Door Dimensions: Unless otherwise indicated, furnish 24" wide in swinging doors for ordinary toilet stalls and 32" wide (clear opening) outswinging doors at stalls equipped for use by handicapped.

C. Plastic Laminate Compartments and Screens: Pressure-laminate one-piece face sheets to core material with no splices or joints and with edges straight and sealed. Seal exposed core material at cutouts to protect against moisture.

D. Overhead-Braced Compartments: Furnish galvanized steel supports and leveling bolts at pilasters as recommended by manufacturer to suit floor conditions. Make provisions for setting and securing continuous, extruded, aluminum, antigrip, overhead bracing at top of each pilaster.

1. Furnish galvanized steel anchorage devices complete with threaded rods, lock washers, and leveling adjustment nuts at pilasters to permit structural connection at floor. Provide shoe at each pilaster to conceal anchorage.

E. Hardware: Furnish hardware for each compartment in partition system, as follows:

1. Hinges: Cutout inset type, adjustable to hold door open at any angle up to 90 degrees. Provide gravity type, spring-action cam type, or concealed torsion rod type, to suit manufacturer's standards.

2. Latch and Keeper: Manufacturer's standard surface-mounted latch unit, designed for emergency access, with combination rubber-faced door strike and keeper.

3. Coat Hook: Manufacturer's standard unit, combination hook and rubber-tipped bumper, sized to prevent door hitting mounted accessories.

4. Door Pull: Manufacturer's standard unit for out-swing doors. Provide pulls on both faces of handicap compartment doors. Design shall be in conformance with ADA requirements.

2.05 FINISHES

A. Color: One color in each room as selected by Architect from manufacturer's full range.

PART 3 EXECUTION

3.01 INSTALLATION

A. General: Comply with manufacturer's recommended procedures and installation sequence. Install partitions rigid, straight, plumb, and level. Provide clearances of not more than 1/2" between pilasters and panels, and not more than 1" between panels and walls. Secure panels to walls with not less than two stirrup brackets attached near top and bottom of panel. Locate wall brackets so that holes for wall anchorages occur in masonry joints. Secure panels to pilasters with not less than two stirrup brackets located to align with stirrup brackets at wall. Secure panels in position with manufacturer's recommended anchoring devices.

B. Floor Supported Partitions and Screens: Set pilaster units with anchorages having not less than 2" penetration into structural floor, unless otherwise recommended by partition manufacturer. Level, plumb, and tighten installation with devices furnished. Hang doors and adjust so that tops of doors are level with tops of pilasters when doors are in closed position.

C. Overhead Braced Compartments: Secure overhead brace to each pilaster with not less than two stirrup brackets. Hang doors and adjust so that top of doors are parallel with overhead brace when doors are in closed position.

D. Screens: Attach with anchoring devices as recommended by manufacturer to suit supporting structure set units to provide support and to resist lateral impact.

3.02 ADJUST AND CLEAN

A. Hardware Adjustment: Adjust and lubricate hardware for proper operation. Set hinges on inswinging doors to hold open approximately 30 degrees from closed position when unlatched. Set hinges on outswinging doors (and entrance swing doors) to return to fully closed position.

B. Clean exposed surfaces of partition systems using materials and methods recommended by manufacturer, and provide protection as necessary to prevent damage during remainder of construction period.

END OF SECTION 10 21 13

SECTION 10 28 00

TOILET, BATH, AND LAUNDRY ACCESSORIES

PART 1 GENERAL

1.01 SUMMARY

A. Section Includes:
   1. Toilet Accessories
   2. Shower Accessories
   3. Attachment hardware

B. Related Sections:
   1. Section 04 20 00 – Unit Masonry
   2. Section 10 21 13 - Toilet Compartments: Coordinate installation of accessories
   3. Division 22 Sections – Plumbing for Under Lavatory Guards
   4. Division 22 Sections – Plumbing for manufactured fiberglass shower units supplied with grab bars and shower seats

1.02 SUBMITTALS

A. General: Submit the following in accordance with Conditions of Contract and Division 01 Specification Sections:
   1. Product Data: Mark each copy to identify applicable products, characteristics, models, options and other supplemental data to clearly communicate information specific to this project.

1.03 REFERENCE STANDARDS

A. ASTM A167 - Stainless and Heat Resisting Chromium-Nickel Steel Plate, Sheet, and Strip.

B. ASTM A366 - Cold Rolled Carbon Steel Sheets, Commercial Quality.

1.04 QUALITY ASSURANCE:

A. Provide products of the same manufacturer for each type of accessory unit and for units exposed in the same area.

1.05 DELIVERY, STORAGE, AND HANDLING

A. Do not deliver accessories to site until rooms in which they are to be installed are ready to receive them.

B. Store packages to prevent physical damage or wetting.

C. Pack accessories individually in a manner to protect accessory and its finish.

D. Maintain protective covers on all units until final clean-up.

E. Protection: Protect adjacent or adjoining finished surfaces and work from damage during installation of work of this Section.

1.06 WARRANTY

A. Work of this Section shall be jointly warrantied by the manufacturer and the installer for a period of one year after final payment. Any material or workmanship that is judged defective during this period shall be replaced at no cost to the Owner.

PART 2 PRODUCTS

2.01 MANUFACTURERS

A. Approved Manufacturers:

1. Bobrick Washroom Equipment, Inc. (818-503-1630)
2. American Specialties, Inc. (ASI) (914-476-9000)
3. Bradley Corporation (800-727-3539)

2.02 MATERIALS - TOILET ACCESSORIES

A. 18-8 (Type 302) stainless steel alloy of at least 22 gauge in all elements of cabinet work. Unless shown otherwise, all exposed stainless steel to have a #4 Satin finish or Satin chrome finish where applicable with all elements of a unit to have brushing in one direction.

B. Exposed surfaces to be protected with a factory applied PVC film to be left in place until final clean-up.

C. Mirrors to be 1/4" polished plate glass with 10-year guarantee against silver spoilage.

D. Stainless steel tubing: 18 ga., Type 304, seamless welded.

E. Fasteners, screws, and bolts: Hot dip galvanized. Expansion shields: Fiber, lead, or rubber as recommended by accessory manufacturer for component substrate.

F. Adhesive: Epoxy type contact cement.

2.03 FINISHES

A. Grab Bars shall have peened gripping surface with satin finish ends.

B. Exposed heads of fasteners shall match finish of accessory.

2.04 FABRICATION - TOILET ACCESSORIES

A. Provide steel anchor plates and anchor components for installation on building finishes.

B. Form surfaces flat without distortion. Maintain flat surface without scratches or dents.

C. Back paint components where contact is made with building finishes to prevent electrolysis.

D. Hot dip galvanize ferrous metal anchors and fastening devices.

E. Shop assemble components and package complete with anchors and fittings.

PART 3 EXECUTION

3.01 PREPARATION

A. Deliver inserts and rough-in frames to job site and in appropriate time for building-in. Provide templates and rough-in measurements as required.

B. Before starting work, notify Architect in writing of any conflicts detrimental to installation or operation of units.

C. Verify with Owner's Representative exact location of accessories.

3.02 INSTALLATION

A. Install fixtures, accessories, and items in accordance with manufacturer's printed instructions.

B. Use concealed fastenings wherever possible.

C. Install true, plumb, and level, securely and rigidly anchored to substrate in accordance with manufacturer's instructions for each item and each type of substrate construction.

1. Wood blocking shall be provided at grab bars and fold down shower seats, and as shown on Drawings.

2. Strap metal may be used for all other areas, as approved by Owner's Representative, unless indicated otherwise.

D. Fasteners for all accessory mounting to be theft-resistant.

PART 4 ACCESSORY SCHEDULE

4.01 PRODUCTS

A. Refer to Drawings for all quantities and locations.

	DESCRIPTION	CATALOG NO.
TA-1	Framed Mirror – 24" x 36" Tempered glass, silvered, coppered, waterproofed.	Model 0620 2436 by ASI Model B-165 2436 Series by Bobrick Model 781-2436 by Bradley
TA-2	Soap Dispenser – Wall mount	B-2111 by Bobrick or Equal
TA-3	Paper Towel Dispenser– surface mounted	B-2860 by Bobrick or Equal
TA-4	HC Toilet Compartment Toilet Tissue Dispenser - surface mounted	B-2892 by Bobrick or Equal
TA-5	Standard Toilet Compartment Toilet Tissue Dispenser	B-2892 by Bobrick or Equal
TA-6	Toilet Seat Cover Dispenser	B-221 by Bobrick or Equal
TA-7	Sanitary Napkin Disposal with five (5) fl liners per unit. (One per each Women's Toilet Compartment)	B-270 by Bobrick or Equal
TA-8	1 1/4" dia. Grab Bar 36", smooth finish	Model 3100 Series (36") by ASI Model B-550x36 by Bobrick 832 Series Model 832-001-36 by Bradley
TA-9	1 1/4" dia. Grab Bar 42", smooth finish	Model 3100 Series (42") by ASI Model B-550x42 by Bobrick 832 Series Model 832-001-42 by Bradley
TA-10	Wall Mounted Baby Changing Station	961 by Bradley or Equal
TA-11	Under Lavatory Guards: White, antimicrobial, molded-vinyl covering for supply and drain piping assemblies intended for use at accessible lavatories to prevent direct contact with and burns from piping. Provide components as required for applications indicated with flip tops at valves that allow service access without removing coverings.	Refer to Division 22 Plumbing Fixture Schedule
TA-12	Shower Seat	Refer to Division 22 Plumbing Fixture Schedule
TA-13	Wall Mounted Trash Receptacle	B-279 by Bobrick or Equal
TA-14	Not Used	

TA-15	Shower Curtain Rod and Vinyl Curtain with S.S. Hooks	B-6047 (Verify Length) w/ B-204-2 & (7) B-204-1 by Bobrick or Equal
TA-16	Not Used	-
TA-17	Not Used	-
TA-18	Wall Mounted Mop Holder (at Service Sink)	B-239 by Bobrick or Equal
TA-19	1 1/4" dia. Grab Bar 24", smooth finish	Model 3100 Series (24") by ASI Model B-550x24 by Bobrick 832 Series Model 832-001-24 by Bradley
TA-20	Soap Dish	76807 by Gamco or Equal

END OF SECTION 10 28 00

SECTION 10 44 00
FIRE PROTECTION SPECIALTIES

PART 1 GENERAL

1.01 SUMMARY

A. Section Includes:

1. Fire Extinguishers and Brackets
2. Accessories

B. Related Sections:

1. 04 20 00 – Unit Masonry

1.02 REFERENCES

A. NFPA 10 - Portable Fire Extinguishers

1.03 SUBMITTALS

A. General: Submit the following in accordance with Conditions of Contract and Division 01 Specification Sections:

1. Submit product data which shall include physical dimensions, operational features, color and finish, anchorage details, rough-in measurements, location, and details.
2. Submit manufacturer's installation instructions.

1.04 QUALITY ASSURANCE

A. National Fire Protection Association (NFPA) Publications:

1. NFPA 10 - Portable Fire Extinguishers

B. Underwriter's Laboratories, Inc. (UL) Standards:

1. UL 4A-60BC classification

1.05 OPERATION AND MAINTENANCE DATA

A. Do not install extinguishers when ambient temperatures may cause freezing.

PART 2 PRODUCTS

2.01 ACCEPTABLE MANUFACTURERS

A. Approved Manufacturers:

1. Larsen's Manufacturing Company (800-527-7367).
2. J. L. Industries, Inc. (800-554-6077).
3. Modern Metal Products, a Division of Technico, Inc. (800-435-5544)

2.02 EXTINGUISHERS:

A. Multi-Purpose, Dry-Chemical Type: Steel Tank, pressurized, including hose and nozzle; 10-pound, ABC classification, UL 4A/60BC.

2.03 BRACKET:

A. Furnish wall mount bracket where shown on Drawings complete with mounting hardware.

2.04 FINISHES

A. Extinguishers: Red Enamel

PART 3 EXECUTION

3.01 INSPECTION

A. Verify rough openings for cabinet are correctly sized and located.

B. Beginning of installation means acceptance of existing conditions.

3.02 INSTALLATION

A. Install cabinets plumb and level in wall openings. Secure rigidly in place in accordance with manufacturer's instructions.

END OF SECTION 10 44 00

SECTION 10 73 13 (10536)
AWNINGS

PART 1 GENERAL

1.01 SUMMARY

A. This Section includes the following:

1. Fixed fabric awnings.

B. Related Sections:

1. Division 05 Section "Metal Fabrications" for blocking, shims, reinforcing, and supplemental support members for connecting to awning frame and anchorage.

1.02 DEFINITIONS

A. Awning: An architectural projection that provides weather protection, identity, or decoration and is wholly supported by the building to which it is attached. An awning is comprised of a lightweight, rigid skeleton structure over which a rigid covering is attached.

1.03 PERFORMANCE REQUIREMENTS

A. General: Design, fabricate, and install awnings to withstand loads from gravity, wind, ponding, and structural movement, including thermally induced movement; and to resist, without failure, other conditions of in-service use, including exposure to weather.

B. Calculations: Provide complete design calculations for record prepared by a registered engineer, licensed in State where project is erected.

C. Structural Performance: Provide awnings capable of withstanding the effects of gravity loads and wind loads and stresses within limits and under conditions indicated:

1. Wind Loads: Meet all State and Local Code requirements for supporting awnings and hurricane wind loads.

D. Thermal Movements: Provide awnings that allow for thermal movements resulting from the following maximum change (range) in ambient and surface temperatures by preventing buckling, opening of joints, overstressing of components, failure of connections, tearing of fabric, and other detrimental effects. Base engineering calculation on surface temperatures of materials due to both solar heat gain and nighttime-sky heat loss.

1. Temperature Change (Range): 120 deg F, ambient; 180 deg F, material surfaces.

1.04 SUBMITTALS

A. Product Data: Include styles, material descriptions, construction details, fabrication details, dimensions of individual components and profiles, hardware, fittings, mounting accessories, features, finishes, and operating instructions for awnings.

B. Shop Drawings: Show location and extent of awnings. Include elevations, sections, and details not shown in Product Data. Show materials, fabrication, dimensions, mounting heights, connections, anchorages, installation details, attachments to other work, operational clearances, and relationship to adjoining work. Show colors and graphic layout and content.

1. Show locations for blocking, reinforcement, and supplementary structural support to be provided by others.

2. For installed products indicated to comply with design loads, include structural analysis data signed and sealed by the qualified professional engineer responsible for their preparation. Calculate requirements for supporting awnings and hurricane wind loads. Verify capacity of members and connections to support loads and verify loads, point

reactions, and locations for attachment of awnings to structure with those indicated on Drawings.

C. Samples for Initial Selection: For each colored or finished component of each type of awning indicated.

1. Include similar Samples of accessories involving color selection.

D. Samples for Verification: For each of the following products and for the full range of color, texture, and pattern variations required, prepared on Samples of size indicated below. If finishes involve normal color and texture variations, include sample sets showing the full range of variations expected.

1. Awning Fabric: 12-inch- square section of fabric from dye lot to be used for the Work, with specified treatments applied. Mark face of fabric.

2. Seam, Edge, and Corner Condition: Not less than 12-inch- long section showing seam, edge, and corner treatment.

3. Frame Finish: Not less than 6-inch lengths.

4. Exposed Hardware Finishes: Manufacturer's standard-size unit, not less than 3 inches square.

5. Accessories: Manufacturer's full-size unit.

E. Product Certificates: For each type of awning fabric, signed by product manufacturer.

F. Welding certificates.

G. Qualification Data: For Installer, fabricator and professional engineer.

H. Research/Evaluation Reports: For anchors and fasteners.

I. Maintenance Data: For awnings to include in maintenance manuals. Include the following:

1. Methods for maintaining awning fabrics and finishes.

2. Precautions about cleaning materials and methods that could be detrimental to fabrics, finishes, and performance.

J. Warranty: Special warranty specified in this Section.

1.05 QUALITY ASSURANCE

A. Installer Qualifications: Fabricator of awnings.

B. Fabricator Qualifications: Shop that employs skilled workers who custom-fabricate products similar to those required for this Project and whose products have a record of successful in-service performance.

1. Fabricator's responsibilities include fabricating[and installing] awnings and providing professional engineering services needed to assume engineering responsibility.

C. Source Limitations: Obtain awnings through one source from a single manufacturer.

D. Welding: Qualify procedures and personnel according to the following:

1. AWS D1.1/D1.1M, "Structural Welding Code--Steel."

2. AWS D1.2, "Structural Welding Code--Aluminum."

E. Regulatory Requirements: Provide awnings complying with or exceeding requirements of <Insert requirements of authorities having jurisdiction>.

F. Fire-Test-Response Characteristics: Provide awning fabrics with the fire-test-response characteristics indicated, as determined by testing identical products per test method indicated below by UL or another testing and inspecting agency acceptable to authorities having jurisdiction:

1. Flame-Resistance Ratings: Passes NFPA 701
2. Permanently attach label to each awning fabric indicating whether fabric is inherently and permanently flame resistant, or treated with flame-retardant chemicals, and whether it will require retreatment after designated time period or cleaning.

G. Electrical Components, Devices, and Accessories: Listed and labeled as defined in NFPA 70, Article 100, by a testing agency acceptable to authorities having jurisdiction, and marked for intended use.

H. Mockups: Before installing awnings, build mockups to verify selections made under sample submittals and to demonstrate aesthetic effects and set quality standards for materials and execution and set quality standards for fabrication and installation.

1. Approved mockups may become part of the completed Work if undisturbed at time of Substantial Completion.

1.06 PROJECT CONDITIONS

A. Weather Limitations: Proceed with installation only when existing and forecasted weather conditions permit installation of awnings in exterior locations to be performed according to manufacturers' written instructions and warranty requirements.

B. Field Measurements: Where awning installation is indicated to fit to other work, verify dimensions of other work by field measurements before fabrication and indicate measurements on Shop Drawings. Allow clearances for fenestration operation throughout the entire operating range. Notify Architect of discrepancies. Coordinate fabrication schedule with construction progress to avoid delaying the Work.

1.07 WARRANTY

A. Special Warranty: Manufacturer's standard form in which manufacturer and fabricator agree to repair or replace components of awnings that fail in materials or workmanship within specified warranty period.

1. Failures include, but are not limited to, the following:

a. Structural failures including framework.

b. Deterioration of fabric including seam failure.

c. Deterioration of metals, metal finishes, and other materials beyond normal weathering.

2. Awning Warranty Period: Five years from date of Substantial Completion.

3. Fabric Warranty Period: Five years from date of Substantial Completion.

4. Thread Warranty Period: Five years from date of Substantial Completion.

PART 2 PRODUCTS

2.01 MANUFACTURERS

A. Basis-of-Design Products: Subject to compliance with requirements, provide awning as indicated on Drawings or a comparable awning by one of the following:

1. Awnings by Coversol, San Antonio, FL, (888-611-5444)

2. The Astrup Company (800-786-1876)

3. Approved Substitution

2.02 AWNING FABRICS

A. Available Products: Subject to compliance with requirements, products that may be incorporated into the Work include, but are not limited to, the following:

B. Manufacturers: Subject to compliance with requirements, provide awnings by one of the following:

1. Glen Raven Custom Fabrics, LLC (800-788-4413)
2. Dickson Industrral Group (a Division of Glen Raven Custom Fabrics, LLC) (336-227-6211)
3. Weblon, Inc. (845-268-2922)
4. Approved Substitution

C. Basis-of-Design Product: Subject to compliance with requirements, provide "Firesist HUV" by Glen Raven Custom Fabrics, LLC or a comparable product by one of the following:

1. "Coastline Plus Fabric" by Weblon, Inc. (845-268-2922)
2. Approved Substitutuion

D. Material

1. Fiber Type: Polymer with Urethane/Acrylic Coating.
2. Fabric Weight: 9.5 oz. per square yard.
3. Width: 60-inches.
4. Surface: Basket Weave – Soil Release Finish.
5. UV Light Blockage: High UV Resistance Rated.
6. Mildew Resistance: Excellent.
7. Chemical Resistance: Excellent.
8. Water Repellency: Excellent.
9. Color: As selected by Architect from manufacturer's full range.
10. Applied Treatment: Urethane/Acrylic.

E. Thread: UV-light, mildew, and rot resistant.

2.03 AWNING FRAMES

A. Aluminum Frames: Alloy and temper recommended by aluminum producer and finisher for type of use and finish indicated and with not less than the strength and durability properties of alloy and temper required by structural loads.

1. Aluminum Plate and Sheet: ASTM B 209.
2. Aluminum Extrusions: ASTM B 221.
3. Drawn Seamless Tubing: ASTM B 210.
4. Aluminum Finish: Baked-enamel or Powder-coat finish complying with finish manufacturer's written instructions for surface preparation including pretreatment, application, baking, and minimum dry film thickness.
5. Awning Style: "Traditional Awning" with open ends and without valance.
6. Frame Material: Extruded Aluminum Tube.
7. Tube Size: 2" Square
8. Metal Gauge: 12 Gauge

B. Anchors, Fasteners, Fittings, Hardware, and Installation Accessories: Complying with performance requirements indicated and suitable for exposure conditions, supporting structure, anchoring substrates, and installation methods indicated. Corrosion-resistant or noncorrodible units; weather-resistant, tamperproof, vandal- and theft-resistant, compatible, nonstaining materials. Provide as required for awning assembly, mounting, and secure attachment. Number as needed to comply with performance requirements and to maximize appearance; evenly spaced. Where exposed to view, with finish and color as selected by Architect from manufacturer's full range.

1. Lag Bolts: ASME B18.2.1.

2. Bolts: Steel bolts complying with ASTM A 307, Grade A; with ASTM A 563 hex nuts and, where indicated, flat washers.

3. Expansion Anchors: Anchor bolt and sleeve assembly of material indicated below with capability to sustain, without failure, a load equal to 6 times the load imposed when installed in unit masonry assemblies and equal to 4 times the load imposed when installed in concrete as determined by testing per ASTM E 488 conducted by a qualified independent testing and inspecting agency.

   a. Material: Stainless steel with bolts and nuts complying with ASTM F 593 and ASTM F 594, Alloy Group 1 or 2.

4. Adhesive-Bonded Anchors: Anchor bolt and sleeve assembly of material indicated below with capability to sustain, without failure, a load equal to 6 times the load imposed when installed in unit masonry assemblies and equal to 4 times the load imposed when installed in concrete as determined by testing per ASTM E 1512 conducted by a qualified independent testing and inspecting agency.

   a. Material: Stainless steel with bolts and nuts complying with ASTM F 593 and ASTM F 594, Alloy Group 1 or 2.

C. Bituminous Paint: Cold-applied asphalt emulsion complying with ASTM D 1187.

2.04 AWNING FABRICATION

A. Fabrics: Reinforce wear points and hardware attachment points with mesh webbing.

1. Fabric Edges and Seams: Manufacturer's standard hemming and seaming methods.

B. Frames: Preassemble awning frames in the shop to greatest extent possible. Disassemble units only as necessary for shipping and handling limitations. Use connections that maintain structural value of joined pieces. Clearly mark units for reassembly and coordinated installation.

1. Form bent-metal corners to smallest radius possible without causing grain separation or otherwise impairing work.

2. Form exposed work true to line and level with accurate angles and surfaces and straight edges.

3. Form exposed connections with hairline joints, flush and smooth, using concealed fasteners where possible. Fabricate slip-fit connections that will be exposed to weather in a manner to exclude water. Provide weep holes where water may accumulate.

4. Weld corners and connections continuously. Obtain fusion without undercut or overlap. Remove welding flux immediately. At exposed corners and connections, finish exposed welds and surfaces smooth and blended so no roughness shows after finishing and contour of welded surface matches that of adjacent surface.

5. Provide for anchorage of type indicated; coordinate with supporting structure. Space anchoring devices to secure metal fabrications in place and to properly transfer loads.

C. Colors of Metal and Plastic Components Exposed to View: As selected by Architect from manufacturer's full range.

PART 3 EXECUTION

3.01 EXAMINATION

A. Examine substrates, areas, and conditions, with Installer present, for compliance with requirements for supporting members, blocking, inserts, installation tolerances, and other conditions affecting performance.

1. Proceed with installation only after unsatisfactory conditions have been corrected.

3.02 INSTALLATION, GENERAL

A. General: Install awnings at locations and in position indicated, securely connected to supports, free of rack, and in proper relation to adjacent construction. Use mounting methods of types described and in compliance with Shop Drawings and fabricator's written instructions.

B. Install awnings after other finishing operations, including joint sealing and painting, have been completed.

C. Attach fabric to frames as recommended by fabricator, using lacing method as required to conceal ends of lacing or using fabric hem pockets to ensure tight, wrinkle-free fit of fabric to frame.

D. Slip fit frame connections accurately together to form hairline joints and tighten to secure.

E. Weld frame connections that are not to be left as exposed joints but cannot be shop welded because of shipping size limitations.

1. Field Welding: Comply with the following requirements:

a. Use materials and methods that minimize distortion and develop strength and corrosion resistance of base metals.

b. Obtain fusion without undercut or overlap.

c. Remove welding flux immediately.

d. At exposed connections, finish exposed welds and surfaces smooth and blended so no roughness shows after finishing and contour of welded surface matches that of adjacent surface.

F. Anchoring to In-Place Construction: Use anchors, fasteners, fittings, hardware, and installation accessories where necessary for securing awnings to structural support and for properly transferring load to in-place construction.

G. Corrosion Protection: Coat concealed surfaces of aluminum that will come into contact with grout, concrete, masonry, wood, or dissimilar metals with a heavy coat of bituminous paint.

H. Coordinate awning installation with flashing and joint-sealant installation so these materials are installed in sequence and manner that prevent exterior moisture from passing through completed exterior wall and roof assemblies.

I. Connections: Connect motorized operators to building electrical system.

3.03 ADJUSTING

A. Adjust awnings to operate smoothly, easily, safely, and free from binding or malfunction throughout entire operational range.

3.04 CLEANING AND PROTECTION

A. Clean awning surfaces after installation, according to manufacturer's written instructions.

B. Touchup Painting: Immediately after erection, clean field welds, connections, and abraded areas. Paint uncoated and abraded areas with same or compatible material as used for shop-applied finish painting.

1. Apply by brush or spray to provide a minimum 2.0-mil dry film thickness.

C. Provide final protection and maintain conditions, in a manner acceptable to manufacturer and Installer, that ensure that awnings are without damage or deterioration at time of Substantial Completion.

D. Replace damaged awnings that cannot be repaired, in a manner approved by Architect, before time of Substantial Completion.

END OF SECTION 10 73 13 (10536)

SECTION 11 68 00

PLAY FIELD EQUIPMENT AND STRUCTURES

PART 1 GENERAL

1.01 RELATED DOCUMENTS

A. Drawings and general provisions of the Contract, including General and Supplementary Conditions and Division 01 Specification Sections, apply to this Section.

1.02 SUMMARY

A. This Section includes the following:

1. Composite playground equipment and structures.

B. Related Sections include the following:

1. Division 03 Section "Cast-in-Place Concrete" for concrete footings.
2. Division 32 Section "Playground Protective Surfacing" for protective surfacing under and around playground equipment.
3. Division 32 Section "Chain Link Fences and Gates" for fencing around play areas.
4. Division 32 Section "Turf and Grasses" for play field surfaces.

1.03 DEFINITIONS

A. Fall Height: According to ASTM F 1487, "the vertical distance between a designated play surface and the protective surfacing beneath it."

B. HDPE: High-density polyethylene.

C. IPEMA: International Play Equipment Manufacturers Association.

D. LLDPE: Linear low-density polyethylene.

E. MDPE: Medium-density polyethylene.

F. Use Zone: According to ASTM F 1487, "the area beneath and immediately adjacent to a play structure that is designated for unrestricted circulation around the equipment and on whose surface it is predicted that a user would land when falling from or exiting the equipment"; sometimes referred to as the Safety Zone.

1.04 SUBMITTALS

A. Product Data: For each type of product indicated.

B. Shop Drawings: Show fabrication and installation details for playground equipment and structures.

C. Coordination Drawings: Plans, drawn to scale, on which the following items are shown and coordinated with each other, based on input from installers of the items involved:

1. Extent of surface systems and use zones for equipment.
2. Critical heights for playground surface, or fall heights for equipment.

D. Samples for Initial Selection: For each type of playground equipment and structure indicated.

1. Manufacturer's color charts.
2. Include similar Samples of playground equipment and accessories involving color selection.

E. Samples for Verification: For each type of exposed finish required, prepared on Samples of size indicated below.

1. Posts and Rails: Not less than 6 inches long.
2. Platforms: Not less than 6 inches square.
3. Molded Plastic: Not less than 3 inches square.

F. Product Certificates: For each type of playground and/or play field equipment, signed by product manufacturer.

G. Installer Certificates: Signed by manufacturers certifying that installers comply with requirements.

H. Qualification Data: For Installer, manufacturer and testing agency.

I. Material Certificates: For the following items, signed by manufacturers:

1. Shop finishes.

J. Field quality-control test reports.

K. Product Test Reports: Based on evaluation of comprehensive tests performed by manufacturer and witnessed by a qualified testing agency, for playground equipment.

L. Maintenance Data: For playground equipment and finishes to include in maintenance manuals.

M. Warranty: Special warranty specified in this Section.

N. If play equipment other than Basis of Design is proposed, as part of substitution request, provide AutoCAD drawing showing available area and area needed for proposed equipment including fall zone. Proposed equipment must fit in provided area.

1.05 QUALITY ASSURANCE

A. Installer Qualifications: An employer of workers trained and approved by manufacturer.

B. Manufacturer Qualifications: A firm whose playground equipment components have been certified by IPEMA's third-party product certification service.

1. Provide playground equipment and play structure components bearing the IPEMA Certification Seal.

C. Testing Agency Qualifications: An independent agency qualified according to ANSI Z34.1 for testing indicated.

D. Safety Standards: Provide playground equipment complying with or exceeding requirements in the following:

1. ASTM F 1487.

2. CPSC No. 325.

E. Preinstallation Conference: Conduct conference at Project site to comply with requirements in Division 01 Section "Project Management and Coordination."

1.06 WARRANTY

A. Special Warranty: Manufacturer's standard form in which manufacturer agrees to repair or replace components of playground equipment that fail in materials or workmanship within specified warranty period.

1. Failures include, but are not limited to, the following:

a. Structural failures.

b. Deterioration of metals, metal finishes, and other materials beyond normal weathering.

2. Warranty Period: Five years from date of Substantial Completion.

PART 2 PRODUCTS

2.01 MANUFACTURERS

A. In other Part 2 articles where titles below introduce lists, the following requirements apply to product selection:

1. Basis-of-Design Product: The design for each piece of playground equipment is based on the product named. Subject to compliance with requirements, provide either the named product or a comparable product by one of the other manufacturers specified.

2.02 PLAYGROUND EQUIPMENT FABRICATION

A. Assemble items in the shop to greatest extent possible to minimize field splicing and assembly. Disassemble units only as necessary for shipping and handling limitations. Clearly mark units for reassembly and coordinated installation. Use connections that maintain structural value of joined pieces.

B. Metal Frame: Fabricate main-frame upright support posts from metal pipe or tubing with cross-section profile and dimensions as indicated. Form metal to required shapes and sizes, true to line and level with true curves and accurate angles and surfaces. Finish exposed surfaces to smooth, sharp, well-defined lines and arcs.

1. Fabricate secondary frame members, bracing, and connections from either steel or aluminum. Unless otherwise indicated, provide each pipe or tubing main-frame member with manufacturer's standard drainable bottom plate or support flange.
2. Form simple and compound curves in bars and extruded shapes by bending members in jigs to produce uniform curvature for each configuration required; maintain cross section of member throughout entire bend without buckling, twisting, cracking, or otherwise deforming exposed surfaces.
3. Cut, drill, and punch metals cleanly and accurately. Remove sharp or rough areas on exposed surfaces.
4. Mill joints to a tight, hairline fit. Cope or miter corner joints. Fabricate connections that will be exposed to weather in a manner to exclude water.
5. Comply with AWS recommended practices for shop welding and brazing. Weld and braze behind finished surfaces without distorting or discoloring exposed side. Clean exposed welded and brazed joints of flux, and dress exposed and contact surfaces.
6. Provide weep holes where water may accumulate.

C. Provide necessary rebates, lugs, and brackets to assemble units and to attach to other work. Cut, reinforce, drill, and tap to receive finish hardware, screws, and similar items, unless otherwise indicated.

D. Provide castings that are sound and free of warp, cracks, blowholes, or other defects that impair strength or appearance. Grind, wire brush, sandblast, and buff castings to remove seams, gate marks, casting flash, and other casting marks.

E. Composite Frame: Fabricate main-frame upright support posts from metal and plastic with profile and dimensions as indicated. Fabricate secondary frame members, bracing, and connections from either steel or aluminum.

F. Play Surfaces: Provide manufacturer's standard elevated drainable decks, platforms, landings, walkways, ramps, and similar transitional play surfaces, designed to withstand loads; fabricated from perforated or expanded metal, molded plastic, plastic panel or plank, or recycled polyethylene panel or plank made into floor units with slip-slip-resistant foot surfaces. Fabricate units in manufacturer's standard modular sizes and shapes to form assembled play surfaces indicated.

G. Elevated Play Surfaces: Guardrails or protective barriers completely surround elevated play surface except for access openings, if play-surface heights above protective surfacing exceed the following for use by age group indicated:

1. Elevated surface greater than 20 inches intended for use by children aged 2 through 5.
2. Elevated surface greater than 30 inches intended for use by children aged 5 through 12.

H. Stepped Play Surfaces: Provide manufacturer's standard infill between stepped platforms according to referenced standards.

I. Protective Barriers and Guardrails: Fabricate according to ASTM F 1487 and as follows:

1. Welded metal pipe or tubing with vertical bars.
2. Steel sheet with openings for vision and ventilation.
3. Welded metal-pipe or -tubing frame with woven wire mesh infill panels.
4. Opaque, Transparent, or solid plastic panels with openings.

J. Handrails: Welded metal pipe or tubing, OD between 0.95 and 1.55 inches. Provide handrails at height for use by age group indicated below:

1. Ages: Between 2 and 5 and 5 and 12 years.

2. Height of Top Surface: 29 inches intended for use by children aged 2 through 5 and 38 inches intended for use by children aged 5 through 12.
3. Close exposed ends of handrails with returns with clearance of 1/4 inch or less.

K. Roofs and Canopies: Manufacturer's standard plastic or steel.

L. Signs: Manufacturer's standard sign panels, fabricated from opaque plastic with graphics molded in, attached to upright support posts.
1. Text: Manufacturer's standard wording indicating appropriate ages for play equipment.
2. Colors: Architect to select colors.

2.03 COMPOSITE PLAY STRUCTURE

A. School Age Composite Play Structure
1. Basis of Design
a. Game Time Kid Corral Composite Play Structure; Model #G11823 for ages 5 to 12. Colors to be selected by Architect.
2. Acceptable Manufacturers
a. Landscape Structures, Inc.
b. Miracle Recreation Equipment Company
c. Little Tikes Commercial Play Systems, Inc.
d. Playworld Systems

B. Toddler/Preschool Composite Play Structure
1. Basis of Design
a. Custom Composite Play Structure as shown on drawings by Gametime. Colors to be selected by Architect.
2. Acceptable Manufacturers
a. Landscape Structures, Inc.
b. Miracle Recreation Equipment Company
c. Little Tikes Commercial Play Systems, Inc.
d. Playworld Systems

C. COMPARISONS CHART

Gametime	Little Tikes	Landscape Structures	Miracle
Double Zip Slide	Double Wide Slide	Double Swoosh Poly Slide	Bump N Glide Slide
D'bl Steer. Wheel Enclo.	Vehicle Panel	Driver Panel	Pilot Panel
Chain Link Climber	Snake Pole	Loop Pole	Spider Climber
Spiral Slide	Duraglide Spiral Slide	Spyroslide	Typhoon Slide
Bannister Rail	Bannister Rail	Firepole	Duck Walk Climber
Stepped Platform	deck to deck steps	Deck to deck steps	Steps w/ 2' Rise
Crawl Tube	crawl tunnel	tunnel	straight crawl tube
Transfer point	transfer station	transfer module	Transfer Point
5 Ring Climber	Spiral Climber	Spiral climber	Incline Spider Climber
Rung Access Ladder	Rung Ladder	vertical climber	vertical ladder

Funnel enclosure	Balcony Deck	balcony deck	Kids perch
Suspension bridge	Clatterbridge	clatterbridge	suspension bridge
funnel bridge	4' Arch Bridge	42" arch bridge	Wide Burma Bridge
Wild goose loop ladder	Circle Overhead	Ring O Ling	Try Ring Climber
chin bar	Chin Bar	chin bar	Chin Bar
cargo net wall	Chain Net Climber	Chain Ladder	Cargo Climber
crunch bar	Leg Lift Bar	handhold leg lift	crunch station
90° loop ladder	90° Fun Wheel	90 horizontal ladder	90 swing ring climber
side stepper	Side Step Climber	Pod Climber	Bongo Bridge
clover leaf climber	Curly Climber	corkscrew climber	Trap Door
wavy tree climber	Fan Climber	centipede climber	Inclined Spider Climber
metal storefront panel	Counter panel	steel X storefront	Store Front Panel
vertical climbing wall	Rock Challenge Wall	Vertical Ascent	Vert. Rock Climbing Wall
double seat panel	Steel Seat panel	playstructure seat	Bench Panel
dna climber	Loop Climber	Sky Rail	Wiggly Worm Climber
Rung Enclosure	10 bar safety rail	Pipe Barrier	Pipe Wall Enclosure
Spiny Arch Climber	Fan Climber	Centipede Climber	Inclined Spider Climber

D. Furnish complete with all required accessories and fasteners necessary for complete installation.

2.04 CAST-IN-PLACE CONCRETE

A. Concrete Materials and Properties: Comply with requirements in Division 03 Section "Cast-in-Place Concrete" to produce normal-weight, air-entrained concrete with a minimum 28-day compressive strength of 3000 psi, 3-inch slump, and 1-inch-maximum-size aggregate.

B. Concrete Materials and Properties: Dry-packaged concrete mix complying with ASTM C 387 and mixed at site with potable water, according to manufacturer's written instructions, to produce normal-weight concrete with a minimum 28-day compressive strength of 3000 psi, 3-inch slump, and 1-inch-maximum-size aggregate.

2.05 FINISHES, GENERAL

A. Comply with NAAMM's "Metal Finishes Manual for Landscape Architect/Owner's Representative and Metal Products" for recommendations for applying and designating finishes.

B. Appearance of Finished Work: Variations in appearance of abutting or adjacent pieces are acceptable if they are within one-half of the range of approved Samples. Noticeable variations in the same piece are not acceptable. Variations in appearance of other components are acceptable if they are within the range of approved Samples and are assembled or installed to minimize contrast.

PART 3 EXECUTION

3.01 EXAMINATION

A. Examine areas and conditions, with Installer present, for compliance with requirements for site clearing, earthwork, site surface and subgrade drainage, and other conditions affecting performance.

1. Do not begin installation before final grading required for placing protective surfacing is completed, unless otherwise permitted by Landscape Architect/Owner's Representative.
2. Proceed with installation only after unsatisfactory conditions have been corrected.

3.02 PREPARATION

A. Verify locations of playground perimeter and pathways. Verify that playground layout and equipment locations comply with requirements for each type and component of equipment. Verify depth/thickness for all surfaces, finished grade, subbase, base, and finished elevations.

B. Verify extent of safety surfacing required.

3.03 INSTALLATION, GENERAL

A. General: Comply with manufacturer's written installation instructions, unless more stringent requirements are indicated. Anchor playground equipment securely, positioned at locations and elevations indicated.

1. Maximum Equipment Height: Coordinate installed heights of equipment and components with finished elevations of protective surfacing. Set equipment so fall heights and elevation requirements for age group use and accessibility are within required limits. Verify that playground equipment elevations comply with requirements for each type and component of equipment.

B. Post and Footing Excavation: Hand-excavate holes for posts and footings to dimensions, profile, spacing, and in locations indicated on Drawings, in firm, undistributed or compacted subgrade soil. Level bearing surfaces with drainage fill to require elevation.

C. General. Concrete footings are to be minimum 6 inches or as noted below resilient surface ("soft surface") – see Drawings). Coordinate installation of inserts with cast-in-place concrete work.

D. Post Setting. Set main-frame equipment posts in concrete footing. Protect portion of posts above footing from concrete splatter. Place concrete around posts and vibrate or tamp for consolidation. Verify that posts are set plumb or at the correct angle and are aligned and at the correct height and spacing. Hold posts in position during placement and finishing operations until concrete is sufficiently cured.

E. Concrete Footings: Smooth top and shape to shed water.

3.04 FIELD QUALITY CONTROL

A. Testing Agency: Engage a qualified independent testing and inspecting agency to perform field tests and inspections and prepare test reports.

B. Arrange for playground equipment manufacturer's technical personnel to inspect playground and playground equipment and components during installation and at final completion and to certify compliance with the following:

1. ASTM F 1487.
2. CPSC No. 325.

C. Notify Architect/Owner's Representative 48 hours in advance of date and time of final inspection.

3.05 ADJUSTING

A. Adjust movable playground equipment components to operate smoothly, easily, and quietly, free from binding, warp, distortion, non-alignment, misplacement, disruption, or malfunction, throughout entire operational range.

3.06 CLEANING

A. After completing playground equipment installation, inspect components. Remove spots, dirt, and debris. Repair damaged finishes to match original finish or replace component.

END OF SECTION 11 68 00

SECTION 31 10 00

SITE CLEARING

PART 1 GENERAL

1.01 RELATED DOCUMENTS

A. Drawings and general provisions of the Contract, including General and Supplementary Conditions and Division 01 Specification Sections, apply to this Section.

1.02 SUMMARY

A. This Section includes the following:

1. Protecting existing trees, shrubs, groundcovers, plants, and grass to remain.
2. Removing existing trees, shrubs, groundcovers, plants, and grass.
3. Clearing and grubbing.
4. Stripping and stockpiling topsoil.
5. Removing above- and below-grade site improvements.
6. Disconnecting, capping or sealing, and removing site utilities.
7. Temporary erosion and sedimentation control measures.

B. Related Sections include the following:

1. Division 01 Section "Temporary Facilities and Controls" for temporary utilities, temporary construction and support facilities, temporary security and protection facilities, and temporary erosion and sedimentation control procedures.
2. Division 01 Section "Execution" for verifying utility locations and for recording field measurements.
3. Division 02 Section "Selective Structure Demolition" for partial demolition of buildings or structures undergoing alterations.
4. Division 31 Section "Earth Moving" for soil materials, excavating, backfilling, and site grading.
5. Division 32 Sections "Turf and Grasses" and "Plants" for finish grading including preparing and placing planting soil mixes and testing of topsoil material.

1.03 DEFINITIONS

A. Topsoil: Natural or cultivated surface-soil layer containing organic matter and sand, silt, and clay particles; friable, pervious, and black or a darker shade of brown, gray, or red than underlying subsoil; reasonably free of subsoil, clay lumps, gravel, and other objects more than 2 inches in diameter; and free of subsoil and weeds, roots, toxic materials, or other non-soil materials.

B. Tree Protection Zone: Area surrounding individual trees or groups of trees to be protected during construction, and defined by the drip line of individual trees or the perimeter drip line of groups of trees, unless otherwise indicated.

1.04 MATERIAL OWNERSHIP

A. Except for stripped topsoil or other materials indicated to remain Owner's property, cleared materials shall become Contractor's property and shall be removed from Project site.

1.05 SUBMITTALS

A. Photographs or videotape, sufficiently detailed, of existing conditions of trees and plantings, adjoining construction, and site improvements that might be misconstrued as damage caused by site clearing.

B. Record drawings, according to Division 01 Section "Project Record Documents," identifying and accurately locating capped utilities and other subsurface structural, electrical, and mechanical conditions.

1.06 QUALITY ASSURANCE

A. Preinstallation Conference: Conduct conference at Project site to comply with requirements in Division 01 Section "Project Management and Coordination."

1.07 PROJECT CONDITIONS

A. Traffic: Minimize interference with adjoining roads, streets, walks, and other adjacent occupied or used facilities during site-clearing operations.

1. Do not close or obstruct streets, walks, or other adjacent occupied or used facilities without permission from Owner and authorities having jurisdiction.

2. Provide alternate routes around closed or obstructed traffic ways if required by authorities having jurisdiction.

B. Improvements on Adjoining Property: Authority for performing site clearing indicated on property adjoining Owner's property will be obtained by Owner before award of Contract.

1. Do not proceed with work on adjoining property until directed by Architect.

C. Salvable Improvements: Carefully remove items indicated to be salvaged and store on Owner's premises where indicated.

D. Utility Locator Service: Notify utility locator service for area where Project is located before site clearing.

E. Do not commence site clearing operations until temporary erosion and sedimentation control measures are in place.

PART 2 PRODUCTS

2.01 SOIL MATERIALS

A. Satisfactory Soil Materials: Requirements for satisfactory soil materials are specified in Division 31 Section "Earth Moving."

1. Obtain approved borrow soil materials off-site when satisfactory soil materials are not available on-site.

PART 3 EXECUTION

3.01 PREPARATION

A. Protect and maintain benchmarks and survey control points from disturbance during construction.

B. Locate and clearly flag trees and vegetation to remain or to be relocated.

C. Protect existing site improvements to remain from damage during construction.

1. Restore, repair or replace damaged improvements to their original condition, as acceptable to Owner.

3.02 TEMPORARY EROSION AND SEDIMENTATION CONTROL

A. Provide temporary erosion and sedimentation control measures to prevent soil erosion and discharge of soil-bearing water runoff or airborne dust to adjacent properties and walkways, according to requirements of authorities having jurisdiction and sediment and erosion control Drawings.

B. Inspect, repair, and maintain erosion and sedimentation control measures during construction until permanent vegetation has been established.

C. Remove erosion and sedimentation controls and restore and stabilize areas disturbed during removal.

3.03 TREE PROTECTION

A. Erect and maintain temporary fencing around tree protection zones before starting site clearing. Remove fence when construction is complete.

1. Do not store construction materials, debris, or excavated material within fenced area.

2. Do not permit vehicles, equipment, or foot traffic within fenced area.

3. Maintain fenced area free of weeds and trash.

B. Do not excavate within tree protection zones, unless otherwise indicated.

C. Where excavation for new construction is required within tree protection zones, hand clear and excavate to minimize damage to root systems. Use narrow-tine spading forks, comb soil to expose roots, and cleanly cut roots as close to excavation as possible.

1. Cover exposed roots with burlap and water regularly.
2. Temporarily support and protect roots from damage until they are permanently redirected and covered with soil.
3. Coat cut faces of roots more than 1-1/2 inches in diameter with an emulsified asphalt or other approved coating formulated for use on damaged plant tissues.
4. Backfill with soil as soon as possible.

D. Repair or replace trees and vegetation indicated to remain that are damaged by construction operations, in a manner approved by Landscape Architect.

1. Employ an arborist, licensed in jurisdiction where Project is located, to submit details of proposed repairs and to repair damage to trees and shrubs.
2. Replace trees that cannot be repaired and restored to full-growth status, as determined by Landscape Architect.

3.04 UTILITIES

A. Locate, identify, disconnect, and seal or cap off utilities indicated to be removed.

1. Arrange with utility companies to shut off indicated utilities.

B. Existing Utilities: Do not interrupt utilities serving facilities occupied by Owner or others unless permitted under the following conditions and then only after arranging to provide temporary utility services according to requirements indicated:

1. Notify Architect not less than two days in advance of proposed utility interruptions.
2. Do not proceed with utility interruptions without Architect's written permission.

C. Excavate for and remove underground utilities indicated to be removed.

D. Removal of underground utilities is included in Division 22 and Division 33 Sections covering site utilities.

3.05 CLEARING AND GRUBBING

A. Remove obstructions, trees, shrubs, grass, and other vegetation to permit installation of new construction.

1. Do not remove trees, shrubs, and other vegetation indicated to remain or to be relocated.
2. Cut minor roots and branches of trees indicated to remain in a clean and careful manner where such roots and branches obstruct installation of new construction.
3. Grind stumps and remove roots, obstructions, and debris extending to a depth of 24 inches below exposed subgrade.
4. Use only hand methods for grubbing within tree protection zone.
5. Chip removed tree branches and dispose of off-site.

B. Fill depressions caused by clearing and grubbing operations with satisfactory soil material unless further excavation or earthwork is indicated.

1. Place fill material in horizontal layers not exceeding a loose depth of 8 inches, and compact each layer to a density equal to adjacent original ground.

3.06 TOPSOIL STRIPPING

A. Remove sod and grass before stripping topsoil.

B. Strip topsoil to whatever depths are encountered in a manner to prevent intermingling with underlying subsoil or other waste materials.

1. Remove subsoil and non-soil materials from topsoil, including trash, debris, weeds, roots, and other waste materials.

C. Stockpile topsoil materials away from edge of excavations without intermixing with subsoil. Grade and shape stockpiles to drain surface water. Cover to prevent windblown dust.

1. Limit height of topsoil stockpiles to 72 inches.
2. Do not stockpile topsoil within tree protection zones.
3. Dispose of excess topsoil as specified for waste material disposal.
4. Stockpile surplus topsoil to allow for respreading deeper topsoil.

3.07 SITE IMPROVEMENTS

A. Remove existing above- and below-grade improvements as indicated and as necessary to facilitate new construction.

B. Remove slabs, paving, curbs, gutters, and aggregate base as indicated.

1. Unless existing full-depth joints coincide with line of demolition, neatly saw-cut length of existing pavement to remain before removing existing pavement. Saw-cut faces vertically.
2. Paint cut ends of steel reinforcement in concrete to remain to prevent corrosion.

3.08 DISPOSAL

A. Disposal: Remove surplus soil material, unsuitable topsoil, obstructions, demolished materials, and waste materials including trash and debris, and legally dispose of them off Owner's property.

1. Separate recyclable materials produced during site clearing from other non-recyclable materials. Store or stockpile without intermixing with other materials and transport them to recycling facilities.

END OF SECTION 31 10 00

SECTION 31 20 00

EARTH MOVING

PART 1 GENERAL

1.01 RELATED DOCUMENTS

A. Drawings and general provisions of the Contract, including General and Supplementary Conditions and Division 01 Specification Sections, apply to this Section.

1.02 SUMMARY

A. Section Includes:

1. Preparing subgrades for slabs-on-grade, walks, turf and grasses, and exterior plants.
2. Excavating and backfilling for buildings and structures.
3. Drainage course for concrete slabs-on-grade.
4. Subbase course for concrete walks and pavements.
5. Subbase and base course for asphalt paving.
6. Subsurface drainage backfill for walls and trenches.
7. Excavating and backfilling for utility trenches.
8. Excavating and backfilling trenches for utilities and pits for buried utility structures.

B. Related Sections:

1. Division 01 Section "Temporary Facilities and Controls" for temporary controls, utilities, and support facilities; also for temporary site fencing if not in another Section.
2. Division 01 Section “Temporary Tree and Plant Protection” for protecting and trimming trees to remain.
3. Divisions 21, 22, 23, 26, 27, 28, and 33 Sections for installing underground mechanical and electrical utilities and buried mechanical and electrical structures.
4. Division 31 Section "Site Clearing" for temporary erosion and sedimentation control measures site stripping, grubbing, stripping and stockpiling topsoil, and removal of above- and below-grade improvements and utilities.
5. Division 32 Section "Turf and Grasses" for finish grading, including preparing and placing planting soil for turf areas.
6. Division 32 Section "Plants" for planting bed establishment and tree and shrub pit excavation and planting.
7. Division 33 Section "Subdrainage" for drainage of play areas.

1.03 DEFINITIONS

A. Backfill: Soil material or controlled low-strength material used to fill an excavation.

1. Initial Backfill: Backfill placed beside and over pipe in a trench, including haunches to support sides of pipe.
2. Final Backfill: Backfill placed over initial backfill to fill a trench.

B. Base Course: Aggregate layer placed between the subbase course and hot-mix asphalt paving.

C. Bedding Course: Aggregate layer placed over the excavated subgrade in a trench before laying pipe.

D. Borrow Soil: Satisfactory soil imported from off-site for use as fill or backfill.

E. Drainage Course: Aggregate layer supporting the slab-on-grade, pavement or other surface material that also minimizes upward capillary flow of pore water.

F. Excavation: Removal of material encountered above subgrade elevations and to lines and dimensions indicated.

1. Authorized Additional Excavation: Excavation below subgrade elevations or beyond indicated lines and dimensions as directed by Architect. Authorized additional excavation and replacement material will be paid for according to Contract provisions for changes in the Work.

2. Bulk Excavation: Excavation more than 10 feet in width and more than 30 feet in length.

3. Unauthorized Excavation: Excavation below subgrade elevations or beyond indicated lines and dimensions without direction by Architect. Unauthorized excavation, as well as remedial work directed by Architect, shall be without additional compensation.

G. Fill: Soil and/or granular materials used to raise existing grades.

H. Rock: Rock material in beds, ledges, unstratified masses, conglomerate deposits, and boulders of rock material 3/4 cu. yd. or more in volume that exceed a standard penetration resistance of 100 blows/2 inches when tested by a geotechnical testing agency, according to ASTM D 1586.

I. Structures: Buildings, footings, foundations, retaining walls, slabs, tanks, curbs, mechanical and electrical appurtenances, or other man-made stationary features constructed above or below the ground surface.

J. Subbase Course: Aggregate layer placed between the subgrade and base course for hot-mix asphalt pavement, or aggregate layer placed between the subgrade and a cement concrete pavement or a cement concrete or hot-mix asphalt walk.

K. Subgrade: Uppermost surface of an excavation or the top surface of a fill or backfill immediately below subbase, drainage fill, drainage course, or topsoil materials.

L. Utilities: On-site underground pipes, conduits, ducts, and cables, as well as underground services within buildings.

1.04 ACTION SUBMITTALS

A. Product Data: For each type of the following manufactured products required:

1. Geotextiles.

2. Controlled low-strength material, including design mixture.

3. Each type of plastic warning tapes.

B. Samples: For the following products, in sizes indicated below:

1. Geotextile: 12 by 12 inches.

2. Warning Tape: 12 inches long; of each color.

1.05 INFORMATIONAL SUBMITTALS

A. Material Test Reports: For each on-site and borrow soil material proposed for fill and backfill as follows:

1. Classification according to ASTM D 2487 of each on site and borrow soil material proposed for fill and backfill.

2. Laboratory compaction curve according to ASTM D 698 for each on-site and borrow soil material proposed for fill and backfill.

B. Preexcavation Photographs or Videotape: Show existing conditions of adjoining construction and site improvements, including finish surfaces, that might be misconstrued as damage caused by earth moving operations. Submit before earth moving begins.

1.06 QUALITY ASSURANCE

A. Geotechnical Testing Agency Qualifications: An independent testing agency qualified according to ASTM E 329 to conduct soil materials and rock definition testing, as documented according to ASTM D3740 and ASTM E 548.

B. Preexcavation Conference: Conduct conference at Project site to comply with requirements in Division 01 Section "Project Management and Coordination."

1.07 PROJECT CONDITIONS

A. Existing Utilities: Do not interrupt utilities serving facilities occupied by Owner or others unless permitted in writing by Architect and then only after arranging to provide temporary utility services according to requirements indicated.

1. Notify Architect not less than two days in advance of proposed utility interruptions.

2. Do not proceed with utility interruptions without Architect's written permission.

3. Contact utility-locator service for area where Project is located before excavating.

B. Demolish and completely remove from site existing underground utilities indicated to be removed. Coordinate with utility companies to shut off services if lines are active.

C. Traffic: Minimize interference with adjoining roads, streets, walks, and other adjacent occupied or used facilities during earth moving operations.

1. Do not close or obstruct streets, walks, or other adjacent occupied or used facilities without permission from Owner and authorities having jurisdiction.

2. Provide alternate routes around closed or obstructed traffic ways if required by Owner or authorities having jurisdiction.

PART 2 PRODUCTS

2.01 SOIL MATERIALS

A. General: Provide borrow soil materials when sufficient satisfactory soil materials are not available from excavations.

B. Satisfactory Soils: Soil Classification Groups GW, GC, GP, GM, SW, SC, SP, and SM according to ASTM D 2487, or a combination of these groups; free of rock or gravel larger than 3 inches in any dimension, debris, waste, frozen materials, vegetation, and other deleterious matter.

C. Unsatisfactory Soils: Soil Classification Groups ML, OL, CH, MH, OH, and PT according to ASTM D 2487, or a combination of these groups.

1. Unsatisfactory soils also include satisfactory soils not maintained within 2 percent of optimum moisture content at time of compaction.

D. Subbase Material: Naturally or artificially graded mixture of natural or crushed gravel, crushed stone, and natural or crushed sand; ASTM D 2940; with at least 90 percent passing a 1-1/2-inch sieve and not more than 12 percent passing a No. 200 sieve.

E. Base Course: Naturally or artificially graded mixture of natural or crushed gravel, crushed stone, and natural or crushed sand; ASTM D 2940; with at least 95 percent passing a 1-1/2-inch sieve and not more than 8 percent passing a No. 200 sieve.

F. Premium Fill: Naturally or artificially graded mixture of natural or crushed gravel, crushed stone, and natural or crushed sand; ASTM D 2940; with at least 90 percent passing a 1-1/2-inch sieve and not more than 12 percent passing a No. 200 sieve.

G. Bedding Course: Naturally or artificially graded mixture of natural or crushed gravel, crushed stone, and natural or crushed sand; ASTM D 2940; except with 100 percent passing a 1-inch sieve and not more than 8 percent passing a No. 200 sieve.

H. Drainage Course: Narrowly graded mixture of washed crushed stone, or crushed or uncrushed gravel; ASTM D 448; coarse-aggregate grading Size 57; with 100 percent passing a 1-1/2-inch sieve and 0 to 5 percent passing a No. 8 sieve.

I. Filter Material: Narrowly graded mixture of natural or crushed gravel, or crushed stone and natural sand; ASTM D 448; coarse-aggregate grading Size 67; with 100 percent passing a 1-inch sieve and 0 to 5 percent passing a No. 4 sieve.

J. Sand: ASTM C 33; fine aggregate.

K. Impervious Fill: Clayey gravel and sand mixture capable of compacting to a dense state.

2.02 GEOTEXTILES

A. Subsurface Drainage Geotextile: Nonwoven needle-punched geotextile, manufactured for subsurface drainage applications, made from polyolefins or polyesters; with elongation greater than 50 percent; complying with AASHTO M 288 and the following, measured per test methods referenced:

1. Survivability: Class 2; AASHTO M 288.
2. Grab Tensile Strength: 157 lbf; ASTM D 4632.
3. Sewn Seam Strength: 142 lbf; ASTM D 4632.
4. Tear Strength: 56 lbf; ASTM D 4533.
5. Puncture Strength: 56 lbf; ASTM D 4833.
6. Apparent Opening Size: No. 40 sieve, maximum; ASTM D 4751.
7. Permittivity: 0.5 per second, minimum; ASTM D 4491.
8. UV Stability: 50 percent after 500 hours' exposure; ASTM D 4355.

B. Separation Geotextile: Woven geotextile fabric, manufactured for separation applications, made from polyolefins or polyesters; with elongation less than 50 percent; complying with AASHTO M 288 and the following, measured per test methods referenced:

1. Survivability: Class 2; AASHTO M 288.
2. Grab Tensile Strength: 247 lbf; ASTM D 4632.
3. Sewn Seam Strength: 222 lbf; ASTM D 4632.
4. Tear Strength: 90 lbf; ASTM D 4533.
5. Puncture Strength: 90 lbf; ASTM D 4833.
6. Apparent Opening Size: No. 60 sieve, maximum; ASTM D 4751.
7. Permittivity: 0.02 per second, minimum; ASTM D 4491.
8. UV Stability: 50 percent after 500 hours' exposure; ASTM D 4355.

2.03 CONTROLLED LOW-STRENGTH MATERIAL

A. Controlled Low-Strength Material: Self-compacting, flowable concrete material produced from the following:

1. Portland Cement: ASTM C 150, Type II.
2. Fly Ash: ASTM C 618, Class C or F.
3. Normal-Weight Aggregate: ASTM C 33, 3/4-inch nominal maximum aggregate size.

4. Foaming Agent: ASTM C 869.

5. Water: ASTM C 94/C 94M.

6. Air-Entraining Admixture: ASTM C 260.

B. Produce low-density, controlled low-strength material with the following physical properties:

1. As-Cast Unit Weight: 30 to 36 lb/cu. ft. at point of placement, when tested according to ASTM C 138/C 138M.

2. Compressive Strength: 80 psi, when tested according to ASTM C 495.

C. Produce conventional-weight, controlled low-strength material with 80-psi compressive strength when tested according to ASTM C 495.

2.04 ACCESSORIES

A. Warning Tape: Acid- and alkali-resistant, polyethylene film warning tape manufactured for marking and identifying underground utilities, 6 inches wide and 4 mils thick, continuously inscribed with a description of the utility; colored as follows:

1. Red: Electric.

2. Yellow: Gas, oil, steam, and dangerous materials.

3. Orange: Telephone and other communications.

4. Blue: Water systems.

5. Green: Sewer systems.

B. Detectable Warning Tape: Acid- and alkali-resistant, polyethylene film warning tape manufactured for marking and identifying underground utilities, a minimum of 6 inches wide and 4 mils thick, continuously inscribed with a description of the utility, with metallic core encased in a protective jacket for corrosion protection, detectable by metal detector when tape is buried up to 30 inches deep; colored as follows:

1. Red: Electric.

2. Yellow: Gas, oil, steam, and dangerous materials.

3. Orange: Telephone and other communications.

4. Blue: Water systems.

5. Green: Sewer systems.

PART 3 EXECUTION

3.01 PREPARATION

A. Protect structures, utilities, sidewalks, pavements, and other facilities from damage caused by settlement, lateral movement, undermining, washout, and other hazards created by earth moving operations.

B. Preparation of subgrade for earthwork operations including removal of vegetation, topsoil, debris obstructions, and deleterious materials from ground surface is specified in Division 31 Section "Site Clearing," during earth moving operations.

C. Protect and maintain erosion and sedimentation controls during earth moving operations.

D. Protect subgrades and foundation soils from freezing temperatures and frost. Remove temporary protection before placing subsequent materials.

3.02 DEWATERING

A. Prevent surface water and ground water from entering excavations, from ponding on prepared subgrades, and from flooding Project site and surrounding area.

B. Protect subgrades from softening, undermining, washout, and damage by rain or water accumulation.

1. Reroute surface water runoff away from excavated areas. Do not allow water to accumulate in excavations. Do not use excavated trenches as temporary drainage ditches.

2. Install dewatering system, to keep subgrades dry and convey ground water away from excavations. Maintain until dewatering is no longer required.

3.03 EXPLOSIVES

A. Explosives: Do not use explosives.

3.04 EXCAVATION, GENERAL

A. Unclassified Excavation: Excavate to subgrade elevations regardless of the character of surface and subsurface conditions encountered. Unclassified excavated materials may include rock, soil materials, and obstructions. No changes in the Contract Sum or the Contract Time will be authorized for rock excavation or removal of obstructions.

1. If excavated materials intended for fill and backfill include unsatisfactory soil materials and rock, replace with satisfactory soil materials.

2. Remove rock to lines and grades indicated to permit installation of permanent construction without exceeding the following dimensions:

a. 24 inches outside of concrete forms other than at footings.

b. 12 inches outside of concrete forms at footings.

c. 6 inches outside of minimum required dimensions of concrete cast against grade.

d. Outside dimensions of concrete walls indicated to be cast against rock without forms or exterior waterproofing treatments.

e. 6 inches beneath bottom of concrete slabs-on-grade.

f. 6 inches beneath pipe in trenches, and the greater of 24 inches wider than pipe or 42 inches wide.

3.05 EXCAVATION FOR STRUCTURES

A. Excavate to indicated elevations and dimensions within a tolerance of plus or minus 1 inch. If applicable, extend excavations a sufficient distance from structures for placing and removing concrete formwork, for installing services and other construction, and for inspections.

1. Excavations for Footings and Foundations: Do not disturb bottom of excavation. Excavate by hand to final grade just before placing concrete reinforcement. Trim bottoms to required lines and grades to leave solid base to receive other work.

2. Excavation for Underground Tanks, Basins, and Mechanical or Electrical Utility Structures: Excavate to elevations and dimensions indicated within a tolerance of plus or minus 1 inch. Do not disturb bottom of excavations intended as bearing surfaces.

3.06 EXCAVATION FOR WALKS AND PAVEMENTS

A. Excavate surfaces under walks and pavements to indicated lines, cross sections, elevations, and subgrades.

3.07 EXCAVATION FOR UTILITY TRENCHES

A. Excavate trenches to indicated gradients, lines, depths, and elevations.

1. Beyond building perimeter, excavate trenches to allow installation of top of pipe below frost line.

B. Excavate trenches to uniform widths to provide the following clearance on each side of pipe or conduit. Excavate trench walls vertically from trench bottom to 12 inches higher than top of pipe or conduit unless otherwise indicated.

1. Clearance: As indicated on drawings.

C. Trench Bottoms: Excavate and shape trench bottoms to provide uniform bearing and support of pipes and conduit. Shape subgrade to provide continuous support for bells, joints, and barrels of pipes and for joints, fittings, and bodies of conduits. Remove projecting stones and sharp objects along trench subgrade.

1. For pipes and conduit 6 inches or larger in nominal diameter, shape bottom of trench to support bottom 90 degrees of pipe or conduit circumference. Fill depressions with tamped sand backfill.

2. For flat-bottomed, multiple-duct conduit units, hand-excavate trench bottoms and support conduit on an undisturbed subgrade.

3. Excavate trenches 6 inches deeper than elevation required in rock or other unyielding bearing material to allow for bedding course.

D. Trench Bottoms: Excavate trenches 4 inches deeper than bottom of pipe and conduit elevations to allow for bedding course. Hand-excavate deeper for bells of pipe.

1. Excavate trenches 6 inches deeper than elevation required in rock or other unyielding bearing material to allow for bedding course.

3.08 SUBGRADE INSPECTION

A. Notify Architect when excavations have reached required subgrade.

B. If Architect determines that unsatisfactory soil is present, continue excavation and replace with compacted backfill or fill material as directed.

C. Proof-roll subgrade below the building slabs and pavements with a pneumatic-tired and loaded 10-wheel, tandem-axle dump truck weighing not less than 15 tons to identify soft pockets and areas of excess yielding. Do not proof-roll wet or saturated subgrades.

1. Completely proof-roll subgrade in one direction, repeating proof-rolling in direction perpendicular to first direction. Limit vehicle speed to 3 mph.

2. Excavate soft spots, unsatisfactory soils, and areas of excessive pumping or rutting, as determined by Architect, and replace with compacted backfill or fill as directed.

D. Authorized additional excavation and replacement material will be paid for according to Contract provisions for changes in the Work.

E. Reconstruct subgrades damaged by freezing temperatures, frost, rain, accumulated water, or construction activities, as directed by Architect, without additional compensation.

3.09 UNAUTHORIZED EXCAVATION

A. Fill unauthorized excavation under foundations or wall footings by extending bottom elevation of concrete foundation or footing to excavation bottom, without altering top elevation. Lean concrete fill, with 28-day compressive strength of 2500 psi, may be used when approved by Architect.

1. Fill unauthorized excavations under other construction, pipe, or conduit as directed by Architect.

3.10 STORAGE OF SOIL MATERIALS

A. Stockpile borrow soil materials and excavated satisfactory soil materials without intermixing. Place, grade, and shape stockpiles to drain surface water. Cover to prevent windblown dust.

1. Stockpile soil materials away from edge of excavations. Do not store within drip line of remaining trees.

3.11 BACKFILL

A. Place and compact backfill in excavations promptly, but not before completing the following:

1. Construction below finish grade including, where applicable, subdrainage, dampproofing, waterproofing, and perimeter insulation.

2. Surveying locations of underground utilities for Record Documents.

3. Testing and inspecting underground utilities.

4. Removing concrete formwork.

5. Removing trash and debris.

6. Removing temporary shoring and bracing, and sheeting.

7. Installing permanent or temporary horizontal bracing on horizontally supported walls.

B. Place backfill on subgrades free of mud, frost, snow, or ice.

3.12 UTILITY TRENCH BACKFILL

A. Place backfill on subgrades free of mud, frost, snow, or ice.

B. Place and compact bedding course on trench bottoms and where indicated. Shape bedding course to provide continuous support for bells, joints, and barrels of pipes and for joints, fittings, and bodies of conduits.

C. Trenches under Footings: Backfill trenches excavated under footings and within 18 inches of bottom of footings with satisfactory soil; fill with concrete to elevation of bottom of footings. Concrete is specified in Division 03 Section "Cast-in-Place Concrete."

D. Backfill voids with satisfactory soil while removing shoring and bracing.

E. Place and compact initial backfill of subbase material or satisfactory soil, free of particles larger than 1 inch in any dimension, to a height of 12 inches over the utility pipe or conduit.

1. Carefully compact initial backfill under pipe haunches and compact evenly up on both sides and along the full length of piping or conduit to avoid damage or displacement of piping or conduit. Coordinate backfilling with utilities testing.

F. Controlled Low-Strength Material: Place initial backfill of controlled low-strength material to a height of 12 inches over the pipe or conduit. Coordinate backfilling with utilities testing.

G. Backfill voids with satisfactory soil while installing and removing shoring and bracing.

H. Place and compact final backfill of satisfactory soil to final subgrade elevation.

I. Controlled Low-Strength Material: Place final backfill of controlled low-strength material to final subgrade elevation.

J. Install warning tape directly above utilities, 12 inches below finished grade, except 6 inches below subgrade under pavements and slabs.

3.13 SOIL FILL

A. Plow, scarify, bench, or break up sloped surfaces steeper than 1 vertical to 4 horizontal so fill material will bond with existing material.

B. Place and compact fill material in layers to required elevations as follows:

1. Under grass and planted areas, use satisfactory soil material.

2. Under walks and pavements, use satisfactory soil material.

3. Under steps and ramps, use engineered fill.

4. Under building slabs, use engineered fill.

5. Under footings and foundations, use engineered fill.

C. Place soil fill on subgrades free of mud, frost, snow, or ice.

3.14 SOIL MOISTURE CONTROL

A. Uniformly moisten or aerate subgrade and each subsequent fill or backfill soil layer before compaction to within 2 percent of optimum moisture content.

1. Do not place backfill or fill soil material on surfaces that are muddy, frozen, or contain frost or ice.

2. Remove and replace, or scarify and air dry, otherwise satisfactory soil material that exceeds optimum moisture content by 2 percent and is too wet to compact to specified dry unit weight.

3.15 COMPACTION OF SOIL BACKFILLS AND FILLS

A. Place backfill and fill soil materials in layers not more than 8 inches in loose depth for material compacted by heavy compaction equipment, and not more than 4 inches in loose depth for material compacted by hand-operated tampers.

B. Place backfill and fill soil materials evenly on all sides of structures to required elevations, and uniformly along the full length of each structure.

C. Compact soil materials to not less than the following percentages of maximum dry unit weight according to ASTM D 698:

1. Under structures, building slabs, steps, and pavements, scarify and recompact top 12 inches of existing subgrade and each layer of backfill or fill soil material at 98 percent.

2. Under walkways, scarify and recompact top 6 inches below subgrade and compact each layer of backfill or fill soil material at 98 percent.

3. Under turf or unpaved areas, scarify and recompact top 6 inches below subgrade and compact each layer of backfill or fill soil material at 85 percent.

4. For utility trenches, compact each layer of initial and final backfill soil material at 98 percent.

3.16 GRADING

A. General: Uniformly grade areas to a smooth surface, free of irregular surface changes. Comply with compaction requirements and grade to cross sections, lines, and elevations indicated.

1. Provide a smooth transition between adjacent existing grades and new grades.

2. Cut out soft spots, fill low spots, and trim high spots to comply with required surface tolerances.

B. Site Rough Grading: Slope grades to direct water away from buildings and to prevent ponding. Finish subgrades to required elevations within the following tolerances:

1. Turf or Unpaved Areas: Plus or minus 1 inch.

2. Walks: Plus or minus 1/2 inch.

3. Pavements: Plus or minus 1/2 inch.

C. Grading inside Building Lines: Finish subgrade to a tolerance of 1/2 inch when tested with a 10-foot straightedge.

3.17 SUBSURFACE DRAINAGE

A. Subdrainage Pipe: Specified in Division 33 Section "Subdrainage."

B. Subsurface Drain: Place subsurface drainage geotextile around perimeter of subdrainage trench. Place a 6-inch course of filter material on subsurface drainage geotextile to support subdrainage pipe. Encase subdrainage pipe in a minimum of 12 inches of filter material, placed in compacted layers 6 inches thick, and wrap in subsurface drainage geotextile, overlapping sides and ends at least 6 inches.

1. Compact each filter material layer to 85 percent of maximum dry unit weight according to ASTM D 698.

C. Drainage Backfill: Place and compact filter material over subsurface drain, in width indicated, to within 12 inches of final subgrade, in compacted layers 6 inches thick. Overlay drainage backfill with one layer of subsurface drainage geotextile, overlapping sides and ends at least 6 inches.

1. Compact each filter material layer to 85 percent of maximum dry unit weight according to ASTM D 698.

2. Place and compact impervious fill over drainage backfill in 6-inch- thick compacted layers to final subgrade.

3.18 SUBBASE AND BASE COURSES UNDER PAVEMENTS AND WALKS

A. Place subbase course and base course on subgrades free of mud, frost, snow, or ice.

B. On prepared subgrade, place subbase and base course under pavements and walks as follows:

1. Install separation geotextile on prepared subgrade according to manufacturer's written instructions, overlapping sides and ends.

2. Place base course material over subbase course under hot-mix asphalt pavement.

3. Shape subbase and base course to required crown elevations and cross-slope grades.

4. Place subbase and base course 6 inches or less in compacted thickness in a single layer.

5. Place subbase and base course that exceeds 6 inches in compacted thickness in layers of equal thickness, with no compacted layer more than 6 inches thick or less than 3 inches thick.

6. Compact subbase and base course at optimum moisture content to required grades, lines, cross sections, and thickness to not less than 98 percent of maximum dry unit weight according to ASTM D 698.

3.19 DRAINAGE COURSE

A. Place drainage course on subgrades free of mud, frost, snow, or ice.

B. On prepared subgrade, place and compact drainage course under cast-in-place concrete slabs-on-grade as follows:

1. Install subdrainage geotextile on prepared subgrade according to manufacturer's written instructions, overlapping sides and ends.

2. Place drainage course 6 inches or less in compacted thickness in a single layer.

3. Place drainage course that exceeds 6 inches in compacted thickness in layers of equal thickness, with no compacted layer more than 6 inches thick or less than 3 inches thick.

4. Compact each layer of drainage course to required cross sections and thicknesses to not less than 98 percent of maximum dry unit weight according to ASTM D 698.

3.20 FIELD QUALITY CONTROL

A. Testing Agency: Owner will engage a qualified geotechnical engineering testing agency to perform tests and inspections.

B. Allow testing agency to inspect and test subgrades and each fill or backfill layer. Proceed with subsequent earth moving only after test results for previously completed work comply with requirements.

C. Footing Subgrade: At footing subgrades, at least one test of each soil stratum will be performed to verify design bearing capacities. Subsequent verification and approval of other footing subgrades may be based on a visual comparison of subgrade with tested subgrade when approved by Architect.

D. Testing agency will test compaction of soils in place according to ASTM D 1556, ASTM D 2167, ASTM D 2922, and ASTM D 2937, as applicable. Tests will be performed at the following locations and frequencies:

1. Paved and Building Slab Areas: At subgrade and at each compacted fill and backfill layer, at least one test for every 2000 sq. ft. or less of paved area or building slab, but in no case fewer than three tests.

2. Foundation Wall Backfill: At each compacted backfill layer, at least one test for every 100 feet or less of wall length, but no fewer than two tests.

3. Trench Backfill: At each compacted initial and final backfill layer, at least one test for every 150 feet or less of trench length, but no fewer than two tests.

E. When testing agency reports that subgrades, fills, or backfills have not achieved degree of compaction specified, scarify and moisten or aerate, or remove and replace soil materials to depth required; recompact and retest until specified compaction is obtained.

3.21 PROTECTION

A. Protecting Graded Areas: Protect newly graded areas from traffic, freezing, and erosion. Keep free of trash and debris.

B. Repair and reestablish grades to specified tolerances where completed or partially completed surfaces become eroded, rutted, settled, or where they lose compaction due to subsequent construction operations or weather conditions.

1. Scarify or remove and replace soil material to depth as directed by Architect; reshape and recompact.

C. Where settling occurs before Project correction period elapses, remove finished surfacing, backfill with additional soil material, compact, and reconstruct surfacing.

1. Restore appearance, quality, and condition of finished surfacing to match adjacent work, and eliminate evidence of restoration to greatest extent possible.

3.22 DISPOSAL OF SURPLUS AND WASTE MATERIALS

A. Remove surplus satisfactory soil and waste materials, including unsatisfactory soil, trash, and debris, and legally dispose of them off Owner's property.

B. Transport surplus satisfactory soil to designated storage areas on Owner's property. Stockpile or spread soil as directed by Architect.

1. Remove waste materials, including unsatisfactory soil, trash, and debris, and legally dispose of them off Owner's property.

END OF SECTION 31 20 00

SECTION 32 12 16

ASPHALT PAVING

PART 1 GENERAL

1.01 RELATED DOCUMENTS

A. Drawings and general provisions of the Contract, including General and Supplementary Conditions and Division 01 Specification Sections, apply to this Section.

1.02 SUMMARY

A. Section Includes:

1. Cold milling of existing hot-mix asphalt pavement.
2. Hot-mix asphalt patching.
3. Hot-mix asphalt paving.
4. Hot-mix asphalt paving overlay.
5. Asphalt surface treatments.
6. Pavement-marking paint.
7. Traffic-calming devices.
8. Imprinted asphalt.

B. Related Sections:

1. Section 02 41 16 "Structure Demolition" for demolition, removal, and recycling of existing asphalt pavements, and for geotextiles that are not embedded within courses of asphalt paving.
2. Section 31 20 00 "Earth Moving" for aggregate subbase and base courses and for aggregate pavement shoulders.
3. Section 32 13 73 "Concrete Paving Joint Sealants" for joint sealants and fillers at paving terminations.
4. Section 32 14 00 "Unit Paving" for bituminous setting bed for pavers.

1.03 DEFINITION

A. Hot-Mix Asphalt Paving Terminology: Refer to ASTM D 8 for definitions of terms.

B. Post-Consumer Content: Material generated by households or by commercial, industrial and institutional facilities in their role as end-users of the product which can no longer be used for its intended purpose. This includes returns of materials from the distribution chain (Source: ISO 14021).

C. Pre-Consumer Content (Previously referred to as Post-Industrial Content): Material diverted from the waste stream during the manufacturing process. Excluded is reutilization of materials such as rework; regrind or scrap generated in a process and capable of being reclaimed within the same process that generated it (Source ISO 14021).

D. ODOT: Ohio Department of Transportation.

E. ODOT Item Number: Items are as specified in the State of Ohio Department of Transportation Construction and Materials Specifications, 2008 edition.

1.04 ACTION SUBMITTALS

A. Product Data: For each type of product indicated. Include technical data and tested physical and performance properties.

1. Job-Mix Designs: Certification, by authorities having jurisdiction, of approval of each job mix proposed for the Work.

2. Job-Mix Designs: For each job mix proposed for the Work.

B. Shop Drawings: Indicate pavement markings, lane separations, and defined parking spaces. Indicate, with international symbol of accessibility, spaces allocated for people with disabilities.

1.05 INFORMATIONAL SUBMITTALS

A. Qualification Data: For qualified manufacturer and Installer.

B. Material Certificates: For each paving material, from manufacturer.

C. Material Test Reports: For each paving material.

1.06 QUALITY ASSURANCE

A. Manufacturer Qualifications: A paving-mix manufacturer registered with and approved by authorities having jurisdiction or the DOT of state in which Project is located.

B. Installer Qualifications: Imprinted-asphalt manufacturer's authorized installer who is trained and approved for installation of imprinted asphalt required for this Project.

C. Testing Agency Qualifications: Qualified according to ASTM D 3666 for testing indicated.

D. Regulatory Requirements: Comply with materials, workmanship, and other applicable requirements of ODOT for asphalt paving work.

1. Measurement and payment provisions and safety program submittals included in standard specifications do not apply to this Section.

E. Preinstallation Conference: Conduct conference at Project site.

1. Review methods and procedures related to hot-mix asphalt paving including, but not limited to, the following:

a. Review proposed sources of paving materials, including capabilities and location of plant that will manufacture hot-mix asphalt.

b. Review condition of subgrade and preparatory work.

c. Review requirements for protecting paving work, including restriction of traffic during installation period and for remainder of construction period.

d. Review and finalize construction schedule and verify availability of materials, Installer's personnel, equipment, and facilities needed to make progress and avoid delays.

1.07 DELIVERY, STORAGE, AND HANDLING

A. Deliver pavement-marking materials to Project site in original packages with seals unbroken and bearing manufacturer's labels containing brand name and type of material, date of manufacture, and directions for storage.

B. Store pavement-marking materials in a clean, dry, protected location within temperature range required by manufacturer. Protect stored materials from direct sunlight.

1.08 PROJECT CONDITIONS

A. Environmental Limitations: Do not apply asphalt materials if subgrade is wet or excessively damp, if rain is imminent or expected before time required for adequate cure, or if the following conditions are not met:

1. Prime Coat: Minimum surface temperature of 60 deg F.

2. Tack Coat: Minimum surface temperature of 60 deg F.

3. Slurry Coat: Comply with weather limitations in ASTM D 3910.

4. Asphalt Base Course: Minimum surface temperature of 40 deg F and rising at time of placement.

5. Asphalt Surface Course: Minimum surface temperature of 60 deg F at time of placement.

B. Pavement-Marking Paint: Proceed with pavement marking only on clean, dry surfaces and at a minimum ambient or surface temperature of 40 deg F for oil-based materials 55 deg F for water-based materials, and not exceeding 95 deg F.

C. Imprinted Asphalt Paving: Proceed with coating imprinted pavement only when air temperature is at least 50 deg F and rising and will not drop below 50 deg F within 8 hours of coating application. Proceed only if no precipitation is expected within two hours after applying the final layer of coating.

PART 2 PRODUCTS

2.01 AGGREGATES

A. General: Use materials and gradations that have performed satisfactorily in previous installations.

B. Coarse Aggregate: ASTM D 692, sound; angular crushed stone or crushed gravel.

C. Fine Aggregate: ASTM D 1073 or AASHTO M 29, sharp-edged natural sand or sand prepared from stone or, gravel or combinations thereof.

1. For hot-mix asphalt, limit natural sand to a maximum of 20 percent by weight of the total aggregate mass.

D. Mineral Filler: ASTM D 242 or AASHTO M 17, rock or slag dust, hydraulic cement, or other inert material.

2.02 ASPHALT MATERIALS

A. Asphalt Binder: AASHTO M 320 or AASHTO MP 1a, PG 64-22.

B. Asphalt Cement: ASTM D 3381 for viscosity-graded material.

C. Prime Coat ODOT Item 408.

D. Tack Coat: ODOT Item 407, ASTM D 977, or AASHTO M 140 emulsified asphalt, or ASTM D 2397 or AASHTO M 208 cationic emulsified asphalt, slow setting, diluted in water, of suitable grade and consistency for application.

E. Fog Seal: ASTM D 977 or AASHTO M 140 emulsified asphalt, or ASTM D 2397 or AASHTO M 208 cationic emulsified asphalt, slow setting, factory diluted in water, of suitable grade and consistency for application.

F. Water: Potable.

G. Undersealing Asphalt: ASTM D 3141, pumping consistency.

2.03 AUXILIARY MATERIALS

A. Herbicide: Commercial chemical for weed control, registered by the EPA. Provide in granular, liquid, or wettable powder form.

B. Sand: ASTM D 1073 or AASHTO M 29, Grade Nos. 2 or 3.

C. Paving Geotextile: AASHTO M 288, nonwoven polypropylene; resistant to chemical attack, rot, and mildew; and specifically designed for paving applications.

D. Joint Sealant: ASTM D 6690 or AASHTO M 324, Type II or III, hot-applied, single-component, polymer-modified bituminous sealant.

E. Joint Sealant: ODOT Item 705.04

F. Pavement-Marking Paint: Latex, waterborne emulsion, lead and chromate free, ready mixed, complying with FS TT-P-1952, Type II, with drying time of less than 45 minutes.

1. Color: White, Yellow, Blue.

G. Glass Beads: AASHTO M 247, Type 1 ODOT Item 740.09.

H. Wheel Stops: Precast, air-entrained concrete, 2500-psi minimum compressive strength, 4-1/2 inches high by 6 inches wide by 72 inches long. Provide chamfered corners, drainage slots on underside, and holes for anchoring to substrate.

1. Dowels: Galvanized steel, 3/4-inch diameter, 10-inch minimum length.

2.04 MIXES

A. Hot-Mix Asphalt: Dense, hot-laid, hot-mix asphalt plant mixes approved by authorities having jurisdiction; designed according to procedures in AI MS-2, "Mix Design Methods for Asphalt Concrete and Other Hot-Mix Types"; and complying with the following requirements:

1. Provide mixes with a history of satisfactory performance in geographical area where Project is located.

2. Base Course: 448 Type 2.

3. Surface Course: 448 Type 1.

B. Hot-Mix Asphalt: Dense, hot-laid, hot-mix asphalt plant mixes per ODOT 448. See plant for types and thickness.

C. Emulsified-Asphalt Slurry: ASTM D 3910, Type 2.

PART 3 EXECUTION

3.01 EXAMINATION

A. Verify that subgrade is dry and in suitable condition to begin paving.

B. Proof-roll subgrade below pavements with heavy pneumatic-tired equipment to identify soft pockets and areas of excess yielding. Do not proof-roll wet or saturated subgrades.

1. Completely proof-roll subgrade in one direction, repeating proof-rolling in direction perpendicular to first direction. Limit vehicle speed to 3 mph.

2. Proof roll with a loaded 10-wheel, tandem-axle dump truck weighing not less than 15 tons.

3. Excavate soft spots, unsatisfactory soils, and areas of excessive pumping or rutting, as determined by Architect, and replace with compacted backfill or fill as directed.

C. Proceed with paving only after unsatisfactory conditions have been corrected.

D. Verify that utilities, traffic loop detectors, and other items requiring a cut and installation beneath the asphalt surface have been completed and that asphalt surface has been repaired flush with adjacent asphalt prior to beginning installation of imprinted asphalt.

3.02 COLD MILLING

A. Clean existing pavement surface of loose and deleterious material immediately before cold milling. Remove existing asphalt pavement by cold milling to grades and cross sections indicated.

1. Mill to a depth of 1-1/2 inches.

2. Mill to a uniform finished surface free of excessive gouges, grooves, and ridges.

3. Control rate of milling to prevent tearing of existing asphalt course.

4. Repair or replace curbs, manholes, and other construction damaged during cold milling.

5. Excavate and trim unbound-aggregate base course, if encountered, and keep material separate from milled hot-mix asphalt.

6. Transport milled hot-mix asphalt to asphalt recycling facility.

7. Keep milled pavement surface free of loose material and dust.

3.03 PATCHING

A. Hot-Mix Asphalt Pavement: Saw cut perimeter of patch and excavate existing pavement section to sound base. Excavate rectangular or trapezoidal patches, extending 12 inches into adjacent sound pavement, unless otherwise indicated. Cut excavation faces vertically. Remove excavated material. Recompact existing unbound-aggregate base course to form new subgrade.

B. Portland Cement Concrete Pavement: Break cracked slabs and roll as required to reseat concrete pieces firmly.

1. Pump hot undersealing asphalt under rocking slab until slab is stabilized or, if necessary, crack slab into pieces and roll to reseat pieces firmly.

2. Remove disintegrated or badly cracked pavement. Excavate rectangular or trapezoidal patches, extending into adjacent sound pavement, unless otherwise indicated. Cut excavation faces vertically. Recompact existing unbound-aggregate base course to form new subgrade.

C. Tack Coat: Apply uniformly to vertical surfaces abutting or projecting into new, hot-mix asphalt paving at a rate of 0.05 to 0.15 gal./sq. yd.

1. Allow tack coat to cure undisturbed before applying hot-mix asphalt paving.

2. Avoid smearing or staining adjoining surfaces, appurtenances, and surroundings. Remove spillages and clean affected surfaces.

D. Patching: Fill excavated pavements with hot-mix asphalt base mix for full thickness of patch and, while still hot, compact flush with adjacent surface.

E. Patching: Partially fill excavated pavements with hot-mix asphalt base mix and, while still hot, compact. Cover asphalt base course with compacted, hot-mix surface layer finished flush with adjacent surfaces.

3.04 REPAIRS

A. Leveling Course: Install and compact leveling course consisting of hot-mix asphalt surface course to level sags and fill depressions deeper than 1 inch in existing pavements.

1. Install leveling wedges in compacted lifts not exceeding 3 inches thick.

B. Crack and Joint Filling: Remove existing joint filler material from cracks or joints to a depth of 1/4 inch.

1. Clean cracks and joints in existing hot-mix asphalt pavement.

2. Use emulsified-asphalt slurry to seal cracks and joints less than 1/4 inch wide. Fill flush with surface of existing pavement and remove excess.

3. Use hot-applied joint sealant to seal cracks and joints more than 1/4 inch wide. Fill flush with surface of existing pavement and remove excess.

3.05 SURFACE PREPARATION

A. General: Immediately before placing asphalt materials, remove loose and deleterious material from substrate surfaces. Ensure that prepared subgrade is ready to receive paving.

B. Herbicide Treatment: Apply herbicide according to manufacturer's recommended rates and written application instructions. Apply to dry, prepared subgrade or surface of compacted-aggregate base before applying paving materials.

C. Tack Coat: Apply uniformly to surfaces of existing pavement at a rate of 0.05 to 0.15 gal./sq. yd.

1. Allow tack coat to cure undisturbed before applying hot-mix asphalt paving.

2. Avoid smearing or staining adjoining surfaces, appurtenances, and surroundings. Remove spillages and clean affected surfaces.

3.06 HOT-MIX ASPHALT PLACING

A. Machine place hot-mix asphalt on prepared surface, spread uniformly, and strike off. Place asphalt mix by hand to areas inaccessible to equipment in a manner that prevents segregation of mix. Place each course to required grade, cross section, and thickness when compacted.

1. Place hot-mix asphalt base course in number of lifts and thicknesses indicated.

2. Place hot-mix asphalt surface course in single lift.

3. Spread mix at minimum temperature of 250 deg F.

4. Begin applying mix along centerline of crown for crowned sections and on high side of one-way slopes unless otherwise indicated.

5. Regulate paver machine speed to obtain smooth, continuous surface free of pulls and tears in asphalt-paving mat.

B. Place paving in consecutive strips not less than 10 feet wide unless infill edge strips of a lesser width are required.

1. After first strip has been placed and rolled, place succeeding strips and extend rolling to overlap previous strips. Complete a section of asphalt base course before placing asphalt surface course.

C. Promptly correct surface irregularities in paving course behind paver. Use suitable hand tools to remove excess material forming high spots. Fill depressions with hot-mix asphalt to prevent segregation of mix; use suitable hand tools to smooth surface.

3.07 JOINTS

A. Construct joints to ensure a continuous bond between adjoining paving sections. Construct joints free of depressions, with same texture and smoothness as other sections of hot-mix asphalt course.

1. Clean contact surfaces and apply tack coat to joints.

2. Offset longitudinal joints, in successive courses, a minimum of 6 inches.

3. Offset transverse joints, in successive courses, a minimum of 24 inches.

4. Construct transverse joints at each point where paver ends a day's work and resumes work at a subsequent time. Construct these joints using either "bulkhead" or "papered" method according to AI MS-22, for both "Ending a Lane" and "Resumption of Paving Operations."

5. Compact joints as soon as hot-mix asphalt will bear roller weight without excessive displacement.

6. Compact asphalt at joints to a density within 2 percent of specified course density.

3.08 COMPACTION

A. General: Begin compaction as soon as placed hot-mix paving will bear roller weight without excessive displacement. Compact hot-mix paving with hot, hand tampers or with vibratory-plate compactors in areas inaccessible to rollers.

1. Complete compaction before mix temperature cools to 185 deg F.

B. Breakdown Rolling: Complete breakdown or initial rolling immediately after rolling joints and outside edge. Examine surface immediately after breakdown rolling for indicated crown, grade, and smoothness. Correct laydown and rolling operations to comply with requirements.

C. Intermediate Rolling: Begin intermediate rolling immediately after breakdown rolling while hot-mix asphalt is still hot enough to achieve specified density. Continue rolling until hot-mix asphalt course has been uniformly compacted to the following density:

1. Average Density: 96 percent of reference laboratory density according to ASTM D 6927 or AASHTO T 245, but not less than 94 percent nor greater than 100 percent.

2. Average Density: 92 percent of reference maximum theoretical density according to ASTM D 2041, but not less than 90 percent nor greater than 96 percent.

D. Finish Rolling: Finish roll paved surfaces to remove roller marks while hot-mix asphalt is still warm.

E. Edge Shaping: While surface is being compacted and finished, trim edges of pavement to proper alignment. Bevel edges while asphalt is still hot; compact thoroughly.

F. Repairs: Remove paved areas that are defective or contaminated with foreign materials and replace with fresh, hot-mix asphalt. Compact by rolling to specified density and surface smoothness.

G. Protection: After final rolling, do not permit vehicular traffic on pavement until it has cooled and hardened.

H. Erect barricades to protect paving from traffic until mixture has cooled enough not to become marked.

3.09 INSTALLATION TOLERANCES

A. Pavement Thickness: Compact each course to produce the thickness indicated within the following tolerances:

1. Base Course: Plus or minus 1/2 inch.

2. Surface Course: Plus 1/4 inch, no minus.

B. Pavement Surface Smoothness: Compact each course to produce a surface smoothness within the following tolerances as determined by using a 10-foot straightedge applied transversely or longitudinally to paved areas:

1. Base Course: 1/4 inch.

2. Surface Course: 1/8 inch.

3. Crowned Surfaces: Test with crowned template centered and at right angle to crown. Maximum allowable variance from template is 1/4 inch.

C. Traffic-Calming Devices: Compact and form asphalt to produce the contour indicated and within a tolerance of plus or minus 1/8 inch of height indicated above pavement surface.

3.10 SURFACE TREATMENTS

A. Fog Seals: Apply fog seal at a rate of 0.10 to 0.15 gal./sq. yd. to existing asphalt pavement and allow to cure. With fine sand, lightly dust areas receiving excess fog seal.

B. Slurry Seals: Apply slurry coat in a uniform thickness according to ASTM D 3910 and allow to cure.

1. Roll slurry seal to remove ridges and provide a uniform, smooth surface.

3.11 PAVEMENT MARKING

A. Do not apply pavement-marking paint until layout, colors, and placement have been verified with Architect.

B. Allow paving to age for 7 days before starting pavement marking.

C. Sweep and clean surface to eliminate loose material and dust.

D. Apply paint with mechanical equipment to produce pavement markings, of dimensions indicated, with uniform, straight edges. Apply at manufacturer's recommended rates to provide a minimum wet film thickness of 15 mils.

1. Broadcast glass beads uniformly into wet pavement markings at a rate of 6 lb/gal.

3.12 FIELD QUALITY CONTROL

A. Testing Agency: Engage a qualified testing agency to perform tests and inspections.

B. Thickness: In-place compacted thickness of hot-mix asphalt courses will be determined according to ASTM D 3549.

C. Surface Smoothness: Finished surface of each hot-mix asphalt course will be tested for compliance with smoothness tolerances.

D. In-Place Density: Testing agency will take samples of uncompacted paving mixtures and compacted pavement according to ASTM D 979 or AASHTO T 168.

1. Reference maximum theoretical density will be determined by averaging results from four samples of hot-mix asphalt-paving mixture delivered daily to site, prepared according to ASTM D 2041, and compacted according to job-mix specifications.

2. In-place density of compacted pavement will be determined by testing core samples according to ASTM D 1188 or ASTM D 2726.

a. One core sample will be taken for every 1000 sq. yd. or less of installed pavement, with no fewer than 3 cores taken.

b. Field density of in-place compacted pavement may also be determined by nuclear method according to ASTM D 2950 and correlated with ASTM D 1188 or ASTM D 2726.

E. Replace and compact hot-mix asphalt where core tests were taken.

F. Remove and replace or install additional hot-mix asphalt where test results or measurements indicate that it does not comply with specified requirements.

3.13 DISPOSAL

A. Except for material indicated to be recycled, remove excavated materials from Project site and legally dispose of them in an EPA-approved landfill.

1. Do not allow milled materials to accumulate on-site.

END OF SECTION 32 12 16

SECTION 32 13 13

CONCRETE PAVING

PART 1 GENERAL

1.01 RELATED DOCUMENTS

A. Drawings and general provisions of the Contract, including General and Supplementary Conditions and Division 01 Specification Sections, apply to this Section.

1.02 SUMMARY

A. Section Includes:

1. Curbs.
2. Walks.
3. Detectable warning surface materials.

B. Related Sections:

1. Section 03 30 00 "Cast-in-Place Concrete" for general building applications of concrete.
2. Section 32 13 73 "Concrete Paving Joint Sealants" for joint sealants in expansion and contraction joints within concrete paving and in joints between concrete paving and asphalt paving or adjacent construction.

1.03 DEFINITIONS

A. Cementitious Materials: Portland cement alone or in combination with one or more of blended hydraulic cement, fly ash and other pozzolans, and ground granulated blast-furnace slag.

B. ODOT: Ohio Department of Transportation.

C. ODOT Item Number: Items are as specified in the State of Ohio Department of Transportation Construction Material Specifications, 2010 edition.

1.04 ACTION SUBMITTALS

A. Product Data: For each type of product indicated.

1. Include installation and maintenance practices for detectable warning surface(s).

B. Shop Drawings: Provide installation procedures for detectable warning surface. Provide drawings showing tile placement including joints.

C. Samples for Initial Selection: For each type of product, ingredient, or admixture requiring color selection.

D. Samples for Verification: For each type of product or exposed finish, prepared as Samples of size indicated below:

1. Detectable Warning Surface Materials: 6 inches by 6 inches of kind proposed for use.

E. Design Mixtures: For each concrete paving mixture. Include alternate design mixtures when characteristics of materials, Project conditions, weather, test results, or other circumstances warrant adjustments.

1.05 INFORMATIONAL SUBMITTALS

A. Qualification Data: For qualified Installer of detectable warnings, ready-mix concrete manufacturer and testing agency.

B. Material Certificates: For the following, from manufacturer:

1. Cementitious materials.

2. Steel reinforcement and reinforcement accessories.

3. Fiber reinforcement.

4. Admixtures.

5. Curing compounds.

6. Applied finish materials.

7. Bonding agent or epoxy adhesive.

8. Joint fillers.

C. Material Test Reports: For each of the following; from a qualified testing agency indicating and interpreting test results for compliance of the following with requirements indicated, based on comprehensive testing of current materials:

1. Aggregates. Include service-record data indicating absence of deleterious expansion of concrete due to alkali-aggregate reactivity.

2. Detectable warning surface materials.

D. Field quality-control reports.

E. Minutes of preinstallation conference.

1.06 DELIVERY, STORAGE AND HANDLING

A. Detectable Warning Surface products shall be suitably packaged or crated to prevent damage in shipment or handling. Finished surfaces shall be protected by sturdy wrappings. Products shall be identified by part number.

1.07 QUALITY ASSURANCE

A. Detectable Warning Surface Installer Qualifications: An employer of workers trained and approved by manufacturer of detectable warning surface materials who has completed installations similar in material, design and extent to that indicated for Project.

B. Ready-Mix-Concrete Manufacturer Qualifications: A firm experienced in manufacturing ready-mixed concrete products and that complies with ASTM C 94/C 94M requirements for production facilities and equipment.

1. Manufacturer certified according to NRMCA's "Certification of Ready Mixed Concrete Production Facilities" (Quality Control Manual - Section 3, "Plant Certification Checklist").

C. Testing Agency Qualifications: Qualified according to ASTM C 1077 and ASTM E 329 for testing indicated, as documented according to ASTM E 548.

1. Personnel conducting field tests shall be qualified as ACI Concrete Field Testing Technician, Grade 1, according to ACI CP-1 or an equivalent certification program.

D. Concrete Testing Service: Engage a qualified testing agency to perform material evaluation tests and to design concrete mixtures.

E. ACI Publications: Comply with ACI 301 unless otherwise indicated.

F. Preinstallation Conference: Conduct conference at Project site to comply with requirements in Division 01 Section "Project Management and Coordination."

1. Require representatives of each entity directly concerned with concrete paving to attend, including the following:

a. Contractor's superintendent.

b. Independent testing agency responsible for concrete design mixtures.

c. Ready-mix concrete manufacturer.

d. Concrete paving subcontractor.

1.08 PROJECT CONDITIONS

A. Traffic Control: Maintain access for vehicular and pedestrian traffic as required for other construction activities.

PART 2 PRODUCTS

2.01 FORMS

A. Form Materials: Plywood, metal, metal-framed plywood, or other approved panel-type materials to provide full-depth, continuous, straight, and smooth exposed surfaces.

1. Use flexible or uniformly curved forms for curves with a radius of 100 feet or less. Do not use notched and bent forms.

B. Form-Release Agent: Commercially formulated form-release agent that will not bond with, stain, or adversely affect concrete surfaces and that will not impair subsequent treatments of concrete surfaces.

2.02 STEEL REINFORCEMENT

A. Plain-Steel Welded Wire Reinforcement: ASTM A 185/A 185M, fabricated from galvanized-steel wire into flat sheets.

B. Deformed-Steel Welded Wire Reinforcement: ASTM A 497/A 497M, flat sheet.

C. Reinforcing Bars: ASTM A 615/A 615M, Grade 60; deformed.

D. Galvanized Reinforcing Bars: ASTM A 767/A 767M, Class II zinc coated, hot-dip galvanized after fabrication and bending; with ASTM A 615/A 615M, Grade 60 deformed bars.

E. Steel Bar Mats: ASTM A 184/A 184M; with ASTM A 615/A 615M, Grade 60, deformed bars; assembled with clips.

F. Plain-Steel Wire: ASTM A 82/A 82M, galvanized.

G. Deformed-Steel Wire: ASTM A 496/A 496M.

H. Joint Dowel Bars: ASTM A 615/A 615M, Grade 60 plain-steel bars; zinc coated (galvanized) after fabrication according to ASTM A 767/A 767M, Class I coating. Cut bars true to length with ends square and free of burrs.

I. Tie Bars: ASTM A 615/A 615M, Grade 60, deformed.

J. Bar Supports: Bolsters, chairs, spacers, and other devices for spacing, supporting, and fastening reinforcing bars, welded wire reinforcement, and dowels in place. Manufacture bar supports according to CRSI's "Manual of Standard Practice" from steel wire, plastic, or precast concrete of greater compressive strength than concrete specified, and as follows:

1. Equip wire bar supports with sand plates or horizontal runners where base material will not support chair legs.

K. Zinc Repair Material: ASTM A 780.

2.03 CONCRETE MATERIALS

A. Cementitious Material: Use the following cementitious materials, of same type, brand, and source throughout Project:

1. Portland Cement: ASTM C 150, gray portland cement Type I/II. Supplement with the following:

a. Fly Ash: ASTM C 618, Class F.

b. Ground Granulated Blast-Furnace Slag: ASTM C 989, Grade 100 or 120.

B. Normal-Weight Aggregates: ASTM C 33, Class 4M, uniformly graded. Provide aggregates from a single source with documented service-record data of at least 10 years' satisfactory service in similar paving applications and service conditions using similar aggregates and cementitious materials.

1. Maximum Coarse-Aggregate Size: 1 inch nominal.

2. Fine Aggregate: Free of materials with deleterious reactivity to alkali in cement.

C. Water: Potable and complying with ASTM C 94/C 94M.

D. Air-Entraining Admixture: ASTM C 260.

E. Chemical Admixtures: Admixtures certified by manufacturer to be compatible with other admixtures and to contain not more than 0.1 percent water-soluble chloride ions by mass of cementitious material.

1. Water-Reducing Admixture: ASTM C 494/C 494M, Type A.

2. Retarding Admixture: ASTM C 494/C 494M, Type B.

3. Water-Reducing and Retarding Admixture: ASTM C 494/C 494M, Type D.

F. Color Pigment: ASTM 979, synthetic mineral-oxide pigments or colored water-reducing admixtures; color stable, free of carbon black, nonfading, and resistant to lime and other alkalis.

1. Color: Selected by Architect from manufacturer's full range.

2.04 FIBER REINFORCEMENT

A. Synthetic Fiber: Monofilament or fibrillated polypropylene fibers engineered and designed for use in concrete paving, complying with ASTM C 1116/C 1116M, Type III, 1/2 to 1-1/2 inches long.

2.05 CURING MATERIALS

A. Absorptive Cover: AASHTO M 182, Class 3, burlap cloth made from jute or kenaf, weighing approximately 9 oz./sq. yd. dry or cotton mats.

B. Moisture-Retaining Cover: ASTM C 171, polyethylene film or white burlap-polyethylene sheet.

C. Water: Potable.

D. Evaporation Retarder: Waterborne, monomolecular, film forming, manufactured for application to fresh concrete.

E. Clear, Waterborne, Membrane-Forming Curing Compound: ASTM C 309, Type 1, Class B, dissipating.

2.06 RELATED MATERIALS

A. Joint Fillers: ASTM D 1751, asphalt-saturated cellulosic fiber or ASTM D 1752, cork or self-expanding cork in preformed strips.

B. Bonding Agent: ASTM C 1059, Type II, non-redispersible, acrylic emulsion or styrene butadiene.

C. Epoxy Bonding Adhesive: ASTM C 881/C 881M, two-component epoxy resin capable of humid curing and bonding to damp surfaces; of class suitable for application temperature, of grade complying with requirements, and of the following types:

1. Types I and II, non-load bearing, for bonding hardened or freshly mixed concrete to hardened concrete.

2.07 DETECTABLE WARNING MATERIALS

A. Provide replaceable cast in place detectable warning surface tiles and accessories as produced by a single manufacturer with a minimum of three (3) years experience in the manufacturing of cast in place detectable warning surface tiles.

B. Provide replaceable cast in place detectable warning tiles of sizes required to cover area shown on plans with a minimum number of joints.

C. Replaceable cast in place detectable warning tiles shall be an epoxy polymer composition or homogenous glass and carbon reinforced composite which is UV stable and has uniform color throughout. The tile shall incorporate an in-line pattern of truncated domes measuring nominal 0.2" height, 0.9" base diameter, and 0.45" top diameter, spaced center-to-center 3.4" as measured on a diagonal and 2.35" as measured side by side.

D. Tiles shall comply with the detectable warnings on walking surfaces section of the Americans with Disabilities Act (ADA).

E. Provide tiles meeting the following requirements:

1. Water absorption of tile when tested by ASTM D 570-98 not to exceed 0.7%.
2. Slip resistance of tile when tested by ASTM C 1028-96 the combined wet and dry static co-efficient of friction not to be less than 0.80 on top of domes and field area.
3. Compressive strength of tile when tested by ASTM D 695-02a not to be less than 28,000 psi.
4. Tensile strength of tile when tested by ASTM D 638-03 not to be less than 11,600 psi.
5. Flexural strength of tile when tested by ASTM D 790-03 not to be less than 25,000 psi.
6. Chemical stain resistance of tile when tested by ASTM D 543-95 (re approved 2001) or ASTM 1308 to withstand without discoloration or staining - 10% hydrochloric acid, urine, saturated calcium chloride, black stamp pad ink, chewing gum, red aerosol paint, 10% ammonium hydroxide, 1% soap solution, turpentine, urea 5%, diesel fuel and motor oil.
7. Resistance to wear of unglazed ceramic tile by Taber Abrasion per ASTM C501-84 (re approved 2002) shall not be less than 500.
8. Fire resistance of Tile when tested to ASTM E 84-05 flame spread shall be 20 or less.
9. Accelerated weathering of tile when tested by ASTM G 155-05a for 2000 hours shall exhibit the following result – Delta 5.0 as well as no deterioration, fading or chalking of surface color.
10. Accelerated Aging and freeze thaw test of tile and adhesive system when tested to ASTM D 1026 shall show no evidence of cracking, delaminating, warpage, checking, blistering, color change, loosening of tiles or other detrimental defects.
11. Salt and spray performance of tile when tested to ASTM B 117-03 not to show any deterioration or other defects after 200 hours of exposure.
12. AASHTO HB-17 single wheel HS20-44 loading "Standard Specifications for Highways and Bridges." The replaceable cast in place tile shall be mounted on a concrete platform with 1/32" airspace at the underside of the tile top plate then subjected to the specified maximum load of 10,400 lbs., corresponding to an 8000 lb. individual wheel load and a 30% impact factor. The tile shall exhibit no visible damage at the maximum load of 10,400 lbs

F. Color to be selected by architect from manufacturer's full range.

2.08 CONCRETE MIXTURES

A. Prepare design mixtures, proportioned according to ACI 301, for each type and strength of normal-weight concrete, and as determined by either laboratory trial mixtures or field experience.

1. Use a qualified independent testing agency for preparing and reporting proposed concrete design mixtures for the trial batch method.

2. When automatic machine placement is used, determine design mixtures and obtain laboratory test results that meet or exceed requirements.

B. Proportion mixtures to provide normal-weight concrete with the following properties:

1. Compressive Strength (28 Days): 4000 psi.

2. Maximum Water-Cementitious Materials Ratio at Point of Placement: 0.45.

3. Slump Limit: 5 inches, plus or minus 1 inch.

C. Add air-entraining admixture at manufacturer's prescribed rate to result in normal-weight concrete at point of placement having an air content as follows:

1. Air Content: 4-1/2 percent plus or minus 1.5 percent for 1-inch nominal maximum aggregate size.

D. Limit water-soluble, chloride-ion content in hardened concrete to 0.30 percent by weight of cement.

E. Chemical Admixtures: Use admixtures according to manufacturer's written instructions.

1. Use water-reducing admixture in concrete as required for placement and workability.

2. Use water-reducing and retarding admixture when required by high temperatures, low humidity, or other adverse placement conditions.

F. Cementitious Materials: Limit percentage, by weight, of cementitious materials other than portland cement in concrete as follows:

1. Fly Ash of Pozzolan: 25 percent.

2. Ground Granulated Blast-Furnace Slag: 50 percent.

3. Combined Fly Ash or Pozzolan, and Ground Granulated Blast-Furnace Slag: 50 percent with fly as or pozzolan not exceeding 25 percent.

G. Synthetic Fiber: Uniformly disperse in concrete mixture at manufacturer's recommended rate, but not less than 1.0 lb/cu. yd.

H. Color Pigment: Add color pigment to concrete mixture according to manufacturer's written instructions and to result in hardened concrete color consistent with approved sample.

2.09 CONCRETE MIXING

A. Ready-Mixed Concrete: Measure, batch, and mix concrete materials and concrete according to ASTM C 94/C 94M and ASTM C 1116/C 1116M. Furnish batch certificates for each batch discharged and used in the Work.

1. When air temperature is between 85 and 90 deg F, reduce mixing and delivery time from 1-1/2 hours to 75 minutes; when air temperature is above 90 deg F, reduce mixing and delivery time to 60 minutes.

B. Project-Site Mixing: Measure, batch, and mix concrete materials and concrete according to ASTM C 94/C 94M. Mix concrete materials in appropriate drum-type batch machine mixer.

1. For concrete batches of 1 cu. yd. or smaller, continue mixing at least 1-1/2 minutes, but not more than 5 minutes after ingredients are in mixer, before any part of batch is released.

2. For concrete batches larger than 1 cu. yd., increase mixing time by 15 seconds for each additional 1 cu. yd.

3. Provide batch ticket for each batch discharged and used in the Work, indicating Project identification name and number, date, mixture type, mixing time, quantity, and amount of water added.

PART 3 EXECUTION

3.01 EXAMINATION

A. Examine exposed subgrades and subbase surfaces for compliance with requirements for dimensional, grading, and elevation tolerances.

B. Proof-roll prepared subbase surface below concrete paving to identify soft pockets and areas of excess yielding.

1. Completely proof-roll subbase in one direction and repeat in perpendicular direction. Limit vehicle speed to 3 mph.

2. Proof-roll with a pneumatic-tired and loaded, 10-wheel, tandem-axle dump truck weighing not less than 15 tons.

3. Correct subbase with soft spots and areas of pumping or rutting exceeding depth of 1/2 inch according to requirements in Section 31 20 00 "Earth Moving."

C. Proceed with installation only after unsatisfactory conditions have been corrected.

3.02 PREPARATION

A. Remove loose material from compacted subbase surface immediately before placing concrete.

3.03 EDGE FORMS AND SCREED CONSTRUCTION

A. Set, brace, and secure edge forms, bulkheads, and intermediate screed guides to required lines, grades, and elevations. Install forms to allow continuous progress of work and so forms can remain in place at least 24 hours after concrete placement.

B. Clean forms after each use and coat with form-release agent to ensure separation from concrete without damage.

3.04 STEEL REINFORCEMENT

A. General: Comply with CRSI's "Manual of Standard Practice" for fabricating, placing, and supporting reinforcement.

B. Clean reinforcement of loose rust and mill scale, earth, ice, or other bond-reducing materials.

C. Arrange, space, and securely tie bars and bar supports to hold reinforcement in position during concrete placement. Maintain minimum cover to reinforcement.

D. Install welded wire reinforcement in lengths as long as practicable. Lap adjoining pieces at least one full mesh, and lace splices with wire. Offset laps of adjoining widths to prevent continuous laps in either direction.

E. Zinc-Coated Reinforcement: Use galvanized-steel wire ties to fasten zinc-coated reinforcement. Repair cut and damaged zinc coatings with zinc repair material.

F. Install fabricated bar mats in lengths as long as practicable. Handle units to keep them flat and free of distortions. Straighten bends, kinks, and other irregularities, or replace units as required before placement. Set mats for a minimum 2-inch overlap of adjacent mats.

3.05 JOINTS

A. General: Form construction, isolation, and control joints and tool edges true to line, with faces perpendicular to surface plane of concrete. Construct transverse joints at right angles to centerline unless otherwise indicated.

1. When joining existing paving, place transverse joints to align with previously placed joints unless otherwise indicated.

B. Construction Joints: Set construction joints at side and end terminations of paving and at locations where paving operations are stopped for more than one-half hour unless paving terminates at isolation joints.

1. Continue steel reinforcement across construction joints unless otherwise indicated. Do not continue reinforcement through sides of paving strips unless otherwise indicated.

2. Provide tie bars at sides of paving strips where indicated.

3. Butt Joints: Use bonding agent or epoxy bonding adhesive at joint locations where fresh concrete is placed against hardened or partially hardened concrete surfaces.

4. Keyed Joints: Provide preformed keyway-section forms or bulkhead forms with keys unless otherwise indicated. Embed keys at least 1-1/2 inches into concrete.

5. Doweled Joints: Install dowel bars and support assemblies at joints where indicated. Lubricate or coat with asphalt one-half of dowel length to prevent concrete bonding to one side of joint.

C. Isolation Joints: Form isolation joints of preformed joint-filler strips abutting concrete curbs, catch basins, manholes, inlets, structures, other fixed objects, and where indicated.

1. Locate expansion joints at intervals of 50 feet unless otherwise indicated.

2. Extend joint fillers full width and depth of joint.

3. Terminate joint filler not less than 1/2 inch or more than 1 inch below finished surface if joint sealant is indicated.

4. Place top of joint filler flush with finished concrete surface if joint sealant is not indicated.

5. Furnish joint fillers in one-piece lengths. Where more than one length is required, lace or clip joint-filler sections together.

6. During concrete placement, protect top edge of joint filler with metal, plastic, or other temporary preformed cap. Remove protective cap after concrete has been placed on both sides of joint.

D. Control Joints: Form weakened-plane control joints, sectioning concrete into areas as indicated. Construct control joints for a depth equal to at least one-fourth of the concrete thickness, as follows, to match jointing of existing adjacent concrete paving:

1. Grooved Joints: Form control joints after initial floating by grooving and finishing each edge of joint with grooving tool to a 1/4-inch radius. Repeat grooving of contraction joints after applying surface finishes. Eliminate grooving-tool marks on concrete surfaces.

a. Tolerance: Ensure that grooved joints are within 3 inches either way from centers of dowels.

2. Sawed Joints: Form control joints with power saws equipped with shatterproof abrasive or diamond-rimmed blades. Cut 1/8-inch- wide joints into concrete when cutting action will not tear, abrade, or otherwise damage surface and before developing random contraction cracks.

a. Tolerance: Ensure that sawed joints are within 3 inches either way from centers of dowels.

3. Doweled Control Joints: Install dowel bars and support assemblies at joints where indicated. Lubricate or coat with asphalt one-half of dowel length to prevent concrete bonding to one side of joint.

E. Edging: After initial floating, tool edges of paving, gutters, curbs, and joints in concrete with an edging tool to a 1/4-inch radius. Repeat tooling of edges after applying surface finishes. Eliminate edging-tool marks on concrete surfaces.

3.06 CONCRETE PLACEMENT

A. Before placing concrete, inspect and complete formwork installation, steel reinforcement, and items to be embedded or cast-in.

B. Remove snow, ice, or frost from subbase surface and steel reinforcement before placing concrete. Do not place concrete on frozen surfaces.

C. Moisten subbase to provide a uniform dampened condition at time concrete is placed. Do not place concrete around manholes or other structures until they are at required finish elevation and alignment.

D. Comply with ACI 301 requirements for measuring, mixing, transporting, and placing concrete.

E. Do not add water to concrete during delivery or at Project site. Do not add water to fresh concrete after testing.

F. Deposit and spread concrete in a continuous operation between transverse joints. Do not push or drag concrete into place or use vibrators to move concrete into place.

G. Consolidate concrete according to ACI 301 by mechanical vibrating equipment supplemented by hand spading, rodding, or tamping.

1. Consolidate concrete along face of forms and adjacent to transverse joints with an internal vibrator. Keep vibrator away from joint assemblies, reinforcement, or side forms. Use only square-faced shovels for hand spreading and consolidation. Consolidate with care to prevent dislocating reinforcement, dowels, and joint devices.

H. Screed paving surface with a straightedge and strike off.

I. Commence initial floating using bull floats or darbies to impart an open-textured and uniform surface plane before excess moisture or bleed water appears on the surface. Do not further disturb concrete surfaces before beginning finishing operations or spreading surface treatments.

J. Curbs: Use design mixture for automatic machine placement. Produce curbs and gutters to required cross section, lines, grades, finish, and jointing.

K. Slip-Form Paving: Use design mixture for automatic machine placement. Produce paving to required thickness, lines, grades, finish, and jointing.

1. Compact subbase and prepare subgrade of sufficient width to prevent displacement of slip-form paving machine during operations.

L. Cold-Weather Placement: Protect concrete work from physical damage or reduced strength that could be caused by frost, freezing, or low temperatures. Comply with ACI 306.1 and the following:

1. When air temperature has fallen to or is expected to fall below 40 deg F, uniformly heat water and aggregates before mixing to obtain a concrete mixture temperature of not less than 50 deg F and not more than 80 deg F at point of placement.

2. Do not use frozen materials or materials containing ice or snow.

3. Do not use calcium chloride, salt, or other materials containing antifreeze agents or chemical accelerators unless otherwise specified and approved in design mixtures.

M. Hot-Weather Placement: Comply with ACI 301 and as follows when hot-weather conditions exist:

1. Cool ingredients before mixing to maintain concrete temperature below 90 deg F at time of placement. Chilled mixing water or chopped ice may be used to control temperature, provided water equivalent of ice is calculated in total amount of mixing water. Using liquid nitrogen to cool concrete is Contractor's option.

2. Cover steel reinforcement with water-soaked burlap so steel temperature will not exceed ambient air temperature immediately before embedding in concrete.

3. Fog-spray forms, steel reinforcement, and subgrade just before placing concrete. Keep subgrade moisture uniform without standing water, soft spots, or dry areas.

3.07 FLOAT FINISHING

A. General: Do not add water to concrete surfaces during finishing operations.

B. Float Finish: Begin the second floating operation when bleed-water sheen has disappeared and concrete surface has stiffened sufficiently to permit operations. Float surface with power-driven floats or by hand floating if area is small or inaccessible to power units. Finish surfaces to true planes. Cut down high spots and fill low spots. Refloat surface immediately to uniform granular texture.

1. Medium-to-Fine-Textured Broom Finish: Draw a soft-bristle broom across float-finished concrete surface perpendicular to line of traffic to provide a uniform, fine-line texture.

3.08 DETECTABLE WARNINGS

A. Install per manufacturer's written instructions

3.09 CONCRETE PROTECTION AND CURING

A. General: Protect freshly placed concrete from premature drying and excessive cold or hot temperatures.

B. Comply with ACI 306.1 for cold-weather protection.

C. Evaporation Retarder: Apply evaporation retarder to concrete surfaces if hot, dry, or windy conditions cause moisture loss approaching 0.2 lb/sq. ft. x h before and during finishing operations. Apply according to manufacturer's written instructions after placing, screeding, and bull floating or darbying concrete but before float finishing.

D. Begin curing after finishing concrete but not before free water has disappeared from concrete surface.

E. Curing Methods: Cure concrete by moisture curing, moisture-retaining-cover curing compound, or a combination of these as follows:

1. Moisture Curing: Keep surfaces continuously moist for not less than seven days with the following materials:

a. Water.

b. Continuous water-fog spray.

c. Absorptive cover, water saturated and kept continuously wet. Cover concrete surfaces and edges with 12-inch lap over adjacent absorptive covers.

2. Moisture-Retaining-Cover Curing: Cover concrete surfaces with moisture-retaining cover, placed in widest practicable width, with sides and ends lapped at least 12 inches and sealed by waterproof tape or adhesive. Immediately repair any holes or tears occurring during installation or curing period using cover material and waterproof tape.

3. Curing Compound: Apply uniformly in continuous operation by power spray or roller according to manufacturer's written instructions. Recoat areas that have been subjected

to heavy rainfall within three hours after initial application. Maintain continuity of coating, and repair damage during curing period.

3.10 PAVING TOLERANCES

A. Comply with tolerances in ACI 117 and as follows:

1. Elevation: 3/4 inch.
2. Thickness: Plus 3/8 inch, minus 1/4 inch.
3. Surface: Gap below 10-foot- long, unleveled straightedge not to exceed 1/2 inch.
4. Alignment of Tie-Bar End Relative to Line Perpendicular to Paving Edge: 1/2 inch per 12 inches of tie bar.
5. Lateral Alignment and Spacing of Dowels: 1 inch.
6. Vertical Alignment of Dowels: 1/4 inch.
7. Alignment of Dowel-Bar End Relative to Line Perpendicular to Paving Edge: 1/4 inch per 12 inches of dowel.
8. Joint Spacing: 3 inches.
9. Contraction Joint Depth: Plus 1/4 inch, no minus.
10. Joint Width: Plus 1/8 inch, no minus.

3.11 FIELD QUALITY CONTROL

A. Testing Agency: Engage a qualified testing agency to perform tests and inspections.

B. Testing Services: Testing of composite samples of fresh concrete obtained according to ASTM C 172 shall be performed according to the following requirements:

1. Testing Frequency: Obtain at least one composite sample for each 100 cu. yd. or fraction thereof of each concrete mixture placed each day.
   a. When frequency of testing will provide fewer than five compressive-strength tests for each concrete mixture, testing shall be conducted from at least five randomly selected batches or from each batch if fewer than five are used.
2. Slump: ASTM C 143/C 143M; one test at point of placement for each composite sample, but not less than one test for each day's pour of each concrete mixture. Perform additional tests when concrete consistency appears to change.
3. Air Content: ASTM C 231, pressure method; one test for each composite sample, but not less than one test for each day's pour of each concrete mixture.
4. Concrete Temperature: ASTM C 1064/C 1064M; one test hourly when air temperature is 40 deg F and below and when it is 80 deg F and above, and one test for each composite sample.
5. Compression Test Specimens: ASTM C 31/C 31M; cast and laboratory cure one set of three standard cylinder specimens for each composite sample.
6. Compressive-Strength Tests: ASTM C 39/C 39M; test one specimen at seven days and two specimens at 28 days.
   a. A compressive-strength test shall be the average compressive strength from two specimens obtained from same composite sample and tested at 28 days.

C. Strength of each concrete mixture will be satisfactory if average of any three consecutive compressive-strength tests equals or exceeds specified compressive strength and no compressive-strength test value falls below specified compressive strength by more than 500 psi.

D. Test results shall be reported in writing to Architect, concrete manufacturer, and Contractor within 48 hours of testing. Reports of compressive-strength tests shall contain Project identification name and number, date of concrete placement, name of concrete testing and inspecting agency, location of concrete batch in Work, design compressive strength at 28 days, concrete mixture proportions and materials, compressive breaking strength, and type of break for both 7- and 28-day tests.

E. Nondestructive Testing: Impact hammer, sonoscope, or other nondestructive device may be permitted by Architect but will not be used as sole basis for approval or rejection of concrete.

F. Additional Tests: Testing and inspecting agency shall make additional tests of concrete when test results indicate that slump, air entrainment, compressive strengths, or other requirements have not been met, as directed by Architect.

G. Concrete paving will be considered defective if it does not pass tests and inspections.

H. Additional testing and inspecting, at Contractor's expense, will be performed to determine compliance of replaced or additional work with specified requirements.

I. Prepare test and inspection reports.

3.12 REPAIRS AND PROTECTION

A. Remove and replace concrete paving that is broken, damaged, or defective or that does not comply with requirements in this Section. Remove work in complete sections from joint to joint unless otherwise approved by Architect.

B. Drill test cores, where directed by Architect, when necessary to determine magnitude of cracks or defective areas. Fill drilled core holes in satisfactory paving areas with portland cement concrete bonded to paving with epoxy adhesive.

C. Protect concrete paving from damage. Exclude traffic from paving for at least 14 days after placement. When construction traffic is permitted, maintain paving as clean as possible by removing surface stains and spillage of materials as they occur.

D. Maintain concrete paving free of stains, discoloration, dirt, and other foreign material. Sweep paving not more than two days before date scheduled for Substantial Completion inspections.

END OF SECTION 32 13 13

SECTION 32 13 73

CONCRETE PAVING JOINT SEALANTS

PART 1 GENERAL

1.01 RELATED DOCUMENTS

A. Drawings and general provisions of the Contract, including General and Supplementary Conditions and Division 01 Specification Sections, apply to this Section.

1.02 SUMMARY

A. Section Includes:

1. Expansion and contraction joints within cement concrete pavement.
2. Joints between cement concrete and asphalt pavement.

B. Related Sections:

1. Division 32 Section "Asphalt Paving" for constructing joints between concrete and asphalt pavement.
2. Division 32 Section "Concrete Paving" for constructing joints in concrete pavement.

1.03 ACTION SUBMITTALS

A. Product Data: For each joint-sealant product indicated.

1.04 INFORMATIONAL SUBMITTALS

A. Qualification Data: For qualified Installer and testing agency.

B. Product Certificates: For each type of joint sealant and accessory, from manufacturer.

C. Product Test Reports: Based on evaluation of comprehensive tests performed by a qualified testing agency, for joint sealants.

1.05 QUALITY ASSURANCE

A. Installer Qualifications: Manufacturer's authorized representative who is trained and approved for installation of units required for this Project.

B. Source Limitations: Obtain each type of joint sealant from single source from single manufacturer.

C. Product Testing: Test joint sealants using a qualified testing agency.

1. Testing Agency Qualifications: An independent testing agency qualified according to ASTM C 1021 to conduct the testing indicated.

1.06 PROJECT CONDITIONS

A. Do not proceed with installation of joint sealants under the following conditions:

1. When ambient and substrate temperature conditions are outside limits permitted by joint-sealant manufacturer or are below 40 deg F.
2. When joint substrates are wet.
3. Where joint widths are less than those allowed by joint-sealant manufacturer for applications indicated.
4. Where contaminants capable of interfering with adhesion have not yet been removed from joint substrates.

PART 2 PRODUCTS

2.01 MATERIALS

A. Compatibility: Provide joint sealants, backing materials, and other related materials that are compatible with one another and with joint substrates under conditions of service and application, as demonstrated by joint-sealant manufacturer based on testing and field experience.

2.02 COLD-APPLIED JOINT SEALANTS

A. Single-Component, Nonsag, Silicone Joint Sealant for Concrete: ASTM D 5893, Type NS.

B. Single-Component, Self-Leveling, Silicone Joint Sealant for Concrete: ASTM D 5893, Type SL.

C. Multicomponent, Pourable, Traffic-Grade, Urethane Joint Sealant for Concrete: ASTM C 920, Type M, Grade P, Class 25, for Use T.

2.03 HOT-APPLIED JOINT SEALANTS

A. Hot-Applied, Single-Component Joint Sealant for Concrete: ASTM D 3406.

B. Hot-Applied, Single-Component Joint Sealant for Concrete and Asphalt: ASTM D 6690, Types I, II, and III.

2.04 JOINT-SEALANT BACKER MATERIALS

A. General: Provide joint-sealant backer materials that are nonstaining; are compatible with joint substrates, sealants, primers, and other joint fillers; and are approved for applications indicated by joint-sealant manufacturer based on field experience and laboratory testing.

B. Round Backer Rods for Cold- and Hot-Applied Joint Sealants: ASTM D 5249, Type 1, of diameter and density required to control sealant depth and prevent bottom-side adhesion of sealant.

C. Round Backer Rods for Cold-Applied Joint Sealants: ASTM D 5249, Type 3, of diameter and density required to control joint-sealant depth and prevent bottom-side adhesion of sealant.

D. Backer Strips for Cold- and Hot-Applied Joint Sealants: ASTM D 5249; Type 2; of thickness and width required to control joint-sealant depth, prevent bottom-side adhesion of sealant, and fill remainder of joint opening under sealant.

2.05 PRIMERS

A. Primers: Product recommended by joint-sealant manufacturer where required for adhesion of sealant to joint substrates indicated, as determined from preconstruction joint-sealant-substrate tests and field tests.

PART 3 EXECUTION

3.01 PREPARATION

A. Surface Cleaning of Joints: Clean out joints immediately before installing joint sealants to comply with joint-sealant manufacturer's written instructions.

B. Joint Priming: Prime joint substrates where indicated or where recommended in writing by joint-sealant manufacturer, based on preconstruction joint-sealant-substrate tests or prior experience. Apply primer to comply with joint-sealant manufacturer's written instructions. Confine primers to areas of joint-sealant bond; do not allow spillage or migration onto adjoining surfaces.

3.02 INSTALLATION OF JOINT SEALANTS

A. General: Comply with joint-sealant manufacturer's written installation instructions for products and applications indicated unless more stringent requirements apply.

B. Joint-Sealant Installation Standard: Comply with recommendations in ASTM C 1193 for use of joint sealants as applicable to materials, applications, and conditions indicated.

C. Install joint-sealant backings of kind indicated to support joint sealants during application and at position required to produce cross-sectional shapes and depths of installed sealants relative to joint widths that allow optimum sealant movement capability.

1. Do not leave gaps between ends of joint-sealant backings.

2. Do not stretch, twist, puncture, or tear joint-sealant backings.

3. Remove absorbent joint-sealant backings that have become wet before sealant application and replace them with dry materials.

D. Install joint sealants using proven techniques that comply with the following and at the same time backings are installed:

1. Place joint sealants so they directly contact and fully wet joint substrates.

2. Completely fill recesses in each joint configuration.

3. Produce uniform, cross-sectional shapes and depths relative to joint widths that allow optimum sealant movement capability.

E. Tooling of Nonsag Joint Sealants: Immediately after joint-sealant application and before skinning or curing begins, tool sealants according to the following requirements to form smooth, uniform beads of configuration indicated; to eliminate air pockets; and to ensure contact and adhesion of sealant with sides of joint:

1. Remove excess joint sealant from surfaces adjacent to joints.

2. Use tooling agents that are approved in writing by joint-sealant manufacturer and that do not discolor sealants or adjacent surfaces.

F. Provide joint configuration to comply with joint-sealant manufacturer's written instructions unless otherwise indicated.

3.03 CLEANING

A. Clean off excess joint sealant or sealant smears adjacent to joints as the Work progresses, by methods and with cleaning materials approved in writing by manufacturers of joint sealants and of products in which joints occur.

3.04 PROTECTION

A. Protect joint sealants, during and after curing period, from contact with contaminating substances and from damage resulting from construction operations or other causes so sealants are without deterioration or damage at time of Substantial Completion. If, despite such protection, damage or deterioration occurs, cut out and remove damaged or deteriorated joint sealants immediately and replace with joint sealant so installations in repaired areas are indistinguishable from the original work.

END OF SECTION 32 13 73

SECTION 32 31 13

CHAIN LINK FENCES AND GATES

PART 1 GENERAL

1.01 RELATED DOCUMENTS

A. Drawings and general provisions of the Contract, including General and Supplementary Conditions and Division 01 Specification Sections, apply to this Section.

1.02 SUMMARY

A. This Section includes the following:

1. Chain-Link Fences: Industrial.
2. Gates: swing.

B. Related Sections include the following:

1. Division 03 Section "Cast-in-Place Concrete" for concrete post concrete fill.
2. Division 32 Section "Earth Moving" for site excavation, fill and backfill where chain-link fences and gates are located.

1.03 SUBMITTALS

A. Product Data: Include construction details, material descriptions, dimensions of individual components and profiles, and finishes for chain-link fences and gates.

1. Fence and gate posts, rails, and fittings.
2. Chain-link fabric, reinforcements, and attachments.
3. Gates and hardware.

B. Shop Drawings: Show locations of fences, gates, posts, rails, tension wires, details of extended posts, extension arms, gate swing, or other operation, hardware, and accessories. Indicate materials, dimensions, sizes, weights, and finishes of components. Include plans, gate elevations, sections, details of post anchorage, attachment, bracing, and other required installation and operational clearances.

C. Samples for Initial Selection: Manufacturer's color charts or 6-inch lengths of actual units showing the full range of colors available for components with factory-applied color finishes.

D. Samples for Verification: For each type of chain-link fence and gate indicated.

1. Polymer-coated steel wire (for fabric) in 6-inch lengths.

E. Product Certificates: For each type of chain-link fence, and gate, signed by product manufacturer.

1. Strength test results for framing according to ASTM F 1043.

F. Qualification Data: For Installer.

G. Field quality-control test reports.

H. Maintenance Data: For the following to include in maintenance manuals:

1. Polymer finishes.

1.04 QUALITY ASSURANCE

A. Installer Qualifications: An experienced installer who has completed chain-link fences and gates similar in material, design, and extent to those indicated for this Project and whose work has resulted in construction with a record of successful in-service performance.

1.05 PROJECT CONDITIONS

A. Field Measurements: Verify layout information for chain-link fences and gates shown on Drawings in relation to property survey and existing structures. Verify dimensions by field measurements.

B. Interruption of Existing Utility Service: Do not interrupt utility services to facilities occupied by Owner or others unless permitted under the following conditions and then only after arranging to provide temporary utility services according to requirements indicated:

1. Notify Architect no fewer than two days in advance of proposed interruption of utility services.
2. Do not proceed with interruption of utility services without Architect's written permission.

PART 2 PRODUCTS

2.01 CHAIN-LINK FENCE FABRIC

A. General: Height indicated on Drawings. Provide fabric in one-piece heights measured between top and bottom of outer edge of selvage knuckle. Comply with ASTM A 392, CLFMI CLF 2445, and requirements indicated below:

1. Steel Wire Fabric: Polymer-coated wire, 9 gauge.
   a. Mesh Size: 2 inches.
   b. Weight of Metallic (Zinc) Coating: ASTM A 392, Type II, Class 2, 2.0 oz./sq. ft. with zinc coating applied before weaving.
   c. Polymer Coating: ASTM F 668, Class 2b over metallic-coated steel wire.
      1) Color: Black, complying with ASTM F 934.
   d. Coat selvage ends of fabric that is metallic coated before the weaving process with manufacturer's standard clear protective coating.
2. Selvage: Knuckled at both selvages.

2.02 INDUSTRIAL FENCE FRAMING

A. Posts and Rails: Comply with ASTM F 1043 for framing, ASTM F 1083 for Group IC round pipe, and the following:

1. Group: IC, round steel pipe, yield strength 50,000 psi.
2. Fence Height: 4 feet.
3. Strength Requirement: Light industrial according to ASTM F 1043.
4. Post Diameter and Thickness: According to ASTM F 1083.
5. Post Size and Thickness: According to ASTM F 1043.
   a. Top Rail: 1.625 inches.
   b. Line Post: 2 inches.
   c. End, Corner and Pull Post: 2-1/2 inches.
   d. Swing Gate Post: 3-1/2 inches.
6. Coating for Steel Framing:
   a. Metallic Coating:
      1) Type A, consisting of not less than minimum 2.0-oz./sq. ft. average zinc coating per ASTM A 123 or 4.0-oz./sq. ft. zinc coating per ASTM A 653.
   b. Polymer coating over metallic coating minimum 10 to 15 mils thickness.

2.03 TENSION BAR (ROD)

A. General: Provide horizontal tension wire at the following locations:
   1. Location: As indicated.

B. Polymer Coating minimum 10 to 15 mils thickness.

2.04 INDUSTRIAL SWING GATES

A. General: Comply with ASTM F 900 for double swing gate types.
   1. Metal Pipe and Tubing: Galvanized steel. Comply with ASTM F 1043 and ASTM F 1083 for materials and protective coatings.

B. Frames and Bracing: Fabricate members from round, galvanized steel tubing with outside dimension and weight according to ASTM F 900 and the following:
   1. Gate Fabric Height: 2 inches less than adjacent fence height.
   2. Leaf Width: As indicated.

3. Frame Members:
   a. Tubular Steel: 2 inches rectangular.

C. Frame Corner Construction:
   1. Welded or assembled with corner fittings and 5/16-inch-diameter, adjustable truss rods for panels 5 feet wide or wider.

D. Hardware: Latches permitting operation from both sides of gate, hinges, lockable center gate stops and keepers for each gate leaf more than 5 feet wide. Fabricate latches with integral eye openings for padlocking; padlock accessible from both sides of gate.

2.05 FITTINGS

A. General: Comply with ASTM F 626.

B. Post and Line Caps: Provide for each post.
   1. Line post caps with loop to receive tension wire or top rail.

C. Rail and Brace Ends: Attach rails securely to each gate, corner, pull, and end post.

D. Rail Fittings: Provide the following:
   1. Top Rail Sleeves: Pressed-steel or round-steel tubing not less than 6 inches long.
   2. Rail Clamps: Line and corner boulevard clamps for connecting bottom rails in the fence line-to-line posts.

E. Tension and Brace Bands: Pressed steel.

F. Tension Bars: Steel, length not less than 2 inches shorter than full height of chain-link fabric. Provide one bar for each gate and end post, and two for each corner and pull post, unless fabric is integrally woven into post.

G. Truss Rod Assemblies: Steel, hot-dip galvanized after threading rod and turnbuckle or other means of adjustment.

H. Tie Wires, Clips, and Fasteners: According to ASTM F 626.
   1. Standard Round Wire Ties: For attaching chain-link fabric to posts, rails, and frames, complying with the following:
      a. Hot-Dip Galvanized Steel: 0.148-inch- diameter wire; galvanized coating thickness matching coating thickness of chain-link fence fabric.

I. Finish:
   1. Metallic Coating for Pressed Steel or Cast Iron: Not less than 1.2 oz. /sq. ft. zinc.

2.06 CAST-IN-PLACE CONCRETE

A. Materials: Portland cement complying with ASTM C 150, Type I aggregates complying with ASTM C 33, and potable water for ready-mixed concrete complying with ASTM C 94. Measure, batch, and mix Project-site-mixed concrete according to ASTM C 94.
   1. Concrete Mixes: Normal-weight concrete air-entrained with not less than 3000-psi compressive strength (28 days), 3-inch slump, and 1-inch maximum size aggregate.

B. Materials: Dry-packaged concrete mix complying with ASTM C 387 for normal-weight concrete mixed with potable water according to manufacturer's written instructions.

2.07 GROUT AND ANCHORING CEMENT

A. Non-shrink, Non-metallic Grout: Premixed, factory-packaged, nonstaining, noncorrosive, nongaseous grout complying with ASTM C 1107. Provide grout, recommended in writing by manufacturer, for exterior applications.

B. Erosion-Resistant Anchoring Cement: Factory-packaged, nonshrink, nonstaining, hydraulic-controlled expansion cement formulation for mixing with potable water at Project site to create pourable anchoring, patching, and grouting compound. Provide formulation that is resistant to erosion from water exposure without needing protection by a sealer or waterproof coating and that is recommended in writing by manufacturer, for exterior applications.

2.08 POLYMER FINISHES

A. Supplemental Color Coating: In addition to specified metallic coatings for steel, provide fence components with polymer coating.

B. Metallic-Coated Steel Tension Wire: PVC-coated wire complying with ASTM F 1664, Class 2b.

C. Metallic-Coated Steel Framing and Fittings: Comply with ASTM F 626 and ASTM F 1043 for polymer coating applied to exterior surfaces and, except inside cap shapes, to exposed interior surfaces.

1. Polymer Coating: Not less than 10-mil-thick PVC or 3-mil-thick polyester finish.

D. Color: Black.

PART 3 EXECUTION

3.01 EXAMINATION

A. Examine areas and conditions, with Installer present, for compliance with requirements for site clearing, earthwork, pavement work, and other conditions affecting performance.

1. Do not begin installation before final grading is completed, unless otherwise permitted by Architect.

2. Proceed with installation only after unsatisfactory conditions have been corrected.

3.02 PREPARATION

A. Stake locations of fence lines, gates, and terminal posts. Do not exceed intervals of 500 feet or line of sight between stakes. Indicate locations of utilities, lawn sprinkler system, underground structures, benchmarks, and property monuments.

3.03 INSTALLATION, GENERAL

A. Install chain-link fencing to comply with ASTM F 567 and more stringent requirements specified.

1. Install fencing on established boundary lines inside property line.

3.04 CHAIN-LINK FENCE INSTALLATION

A. Post Excavation: Drill or hand-excavate holes for posts to diameters and spacings indicated, in firm, undisturbed soil.

B. Post Setting: Set posts in concrete at indicated spacing into firm, undisturbed soil.

1. Verify that posts are set plumb, aligned, and at correct height and spacing, and hold in position during setting with concrete or mechanical devices.

2. Concrete Fill: Place concrete around posts to dimensions indicated and vibrate or tamp for consolidation. Protect aboveground portion of posts from concrete splatter.

a. Exposed Concrete: Extend 2 inches above grade; shape and smooth to shed water.

C. Terminal Posts: Locate terminal end, corner, and gate posts per ASTM F 567 and terminal pull posts at changes in horizontal or vertical alignment of 15 degrees or more.

D. Line Posts: Space line posts uniformly at 10 feet o.c.

E. Post Bracing and Intermediate Rails: Install according to ASTM F 567, maintaining plumb position and alignment of fencing. Install braces at end and gate posts and at both sides of corner and pull posts.

1. Locate horizontal braces at midheight of fabric 6 feet or higher, on fences with top rail and at 2/3 fabric height on fences without top rail. Install so posts are plumb when diagonal rod is under proper tension.

F. Tension Wire: Install according to ASTM F 567, maintaining plumb position and alignment of fencing. Pull wire taut, without sags. Fasten fabric to tension wire with 0.120-inch-diameter hog rings of same material and finish as fabric wire, spaced a maximum of 24 inches o.c. Install tension wire in locations indicated before stretching fabric.

1. Top Tension Wire: Install tension wire through post cap loops.

2. Bottom Tension Wire: Install tension wire within 6 inches of bottom of fabric and tie to each post with not less than same diameter and type of wire.

G. Top Rail: Install according to ASTM F 567, maintaining plumb position and alignment of fencing. Run rail continuously through line post caps, bending to radius for curved runs and terminating into rail end attached to posts or post caps fabricated to receive rail at terminal posts. Provide expansion couplings as recommended in writing by fencing manufacturer.

H. Bottom Rails: Install, spanning between posts.

I. Chain-Link Fabric: Apply fabric to outside of enclosing framework. Leave 2 inches between finish grade or surface and bottom selvage, unless otherwise indicated. Pull fabric taut and tie to posts, rails, and tension wires. Anchor to framework so fabric remains under tension after pulling force is released.

J. Tension or Stretcher Bars: Thread through fabric and secure to end, corner, pull, and gate posts with tension bands spaced not more than 15 inches o.c.

K. Tie Wires: Use wire of proper length to firmly secure fabric to line posts and rails. Attach wire at 1 end to chain-link fabric, wrap wire around post a minimum of 180 degrees, and attach other end to chain-link fabric per ASTM F 626. Bend ends of wire to minimize hazard to individuals and clothing.

1. Maximum Spacing: Tie fabric to line posts at 12 inches o.c. and to braces at 24 inches o.c.

L. Fasteners: Install nuts for tension bands and carriage bolts on the side of the fence opposite the fabric side. Peen ends of bolts or score threads to prevent removal of nuts.

3.05 GATE INSTALLATION

A. Install gates according to manufacturer's written instructions, level, plumb, and secure for full opening without interference. Attach fabric as for fencing. Attach hardware using tamper-resistant or concealed means. Install ground-set items in concrete for anchorage. Adjust hardware for smooth operation and lubricate where necessary.

3.06 ADJUSTING

A. Gate: Adjust gate to operate smoothly, easily, and quietly, free of binding, warp, excessive deflection, distortion, nonalignment, misplacement, disruption, or malfunction, throughout entire operational range. Confirm that latches and locks engage accurately and securely without forcing or binding.

B. Lubricate hardware, gate operator, and other moving parts.

END OF SECTION 32 31 13

SECTION 32 92 00

TURF AND GRASSES

PART 1 GENERAL

1.01 RELATED DOCUMENTS

A. Drawings and general provisions of the Contract, including General and Supplementary Conditions and Division 01 Specification Sections, apply to this Section.

1.02 SUMMARY

A. Section Includes:

1. Seeding.
2. Hydroseeding.
3. Turf renovation.
4. Erosion-control material(s).
5. Pesticides.

B. Related Sections:

1. Section 31 10 00 "Site Clearing" for topsoil stripping and stockpiling.
2. Section 31 20 00 "Earth Moving" for excavation, filling and backfilling, and rough grading.
3. Section 33 46 00 "Subdrainage" for subsurface drainage.

1.03 DEFINITIONS

A. Duff Layer: The surface layer of native topsoil that is composed of mostly decayed leaves, twigs, and detritus.

B. Finish Grade: Elevation of finished surface of planting soil.

C. Manufactured Topsoil: Soil produced off-site by homogeneously blending mineral soils or sand with stabilized organic soil amendments to produce topsoil or planting soil.

D. Pesticide: A substance or mixture intended for preventing, destroying, repelling, or mitigating a pest. This includes insecticides, miticides, herbicides, fungicides, rodenticides, and molluscicides. It also includes substances or mixtures intended for use as a plant regulator, defoliant, or desiccant.

E. Pests: Living organisms that occur where they are not desired or that cause damage to plants, animals, or people. These include insects, mites, grubs, mollusks (snails and slugs), rodents (gophers, moles, and mice), unwanted plants (weeds), fungi, bacteria, and viruses.

F. Planting Soil: Standardized topsoil; existing, native surface topsoil; existing, in-place surface soil; imported topsoil; or manufactured topsoil that is modified with soil amendments and perhaps fertilizers to produce a soil mixture best for plant growth.

G. Subgrade: Surface or elevation of subsoil remaining after excavation is complete, or top surface of a fill or backfill before planting soil is placed.

H. Subsoil: All soil beneath the topsoil layer of the soil profile, and typified by the lack of organic matter and soil organisms.

I. Surface Soil: Soil that is present at the top layer of the existing soil profile at the Project site. In undisturbed areas, the surface soil is typically topsoil, but in disturbed areas such as urban environments, the surface soil can be subsoil.

1.04 ACTION SUBMITTALS

A. Product Data: For each type of product indicated.

1. Pesticides and Herbicides: Include product label and manufacturer's application instructions specific to this Project.

1.05 INFORMATIONAL SUBMITTALS

A. Certification of Grass Seed: From seed vendor for each grass-seed monostand or mixture stating the botanical and common name, percentage by weight of each species and variety, and percentage of purity, germination, and weed seed. Include the year of production and date of packaging.

1. Certification of each seed mixture for turfgrass seed. Include identification of source and name and telephone number of supplier.

B. Qualification Data: For qualified landscape Installer.

C. Product Certificates: For soil amendments and fertilizers, from manufacturer.

D. Material Test Reports: For existing native surface topsoil and imported or manufactured topsoil: if required due to insufficient quantity or quality of on-site material.

E. Maintenance Instructions: Recommended procedures to be established by Owner for maintenance of turf during a calendar year. Submit before expiration of required initial maintenance periods.

F. Planting Schedule: Indicating anticipated planting dates for each type of planting.

1.06 QUALITY ASSURANCE

A. Installer Qualifications: A qualified landscape Installer whose work has resulted in successful turf establishment.

1. Professional Membership: Installer shall be a member in good standing of either the Professional Landcare Network or the American Nursery and Landscape Association.

2. Experience: Five years' experience in turf installation in addition to requirements in Section 01 40 00 "Quality Requirements."

3. Installer's Field Supervision: Require Installer to maintain an experienced full-time supervisor on Project site when work is in progress.

4. Personnel Certifications: Installer's field supervisor shall have certification in one of the following categories from the Professional Landcare Network:

a. Certified Landscape Technician - Exterior, with installation specialty area(s), designated CLT-Exterior.

b. Certified Turfgrass Professional, designated CTP.

c. Certified Turfgrass Professional of Cool Season Lawns, designated CTP-CSL.

5. Pesticide Applicator: State licensed, commercial.

B. Soil-Testing Laboratory Qualifications: An independent laboratory or university laboratory, recognized by the State Department of Agriculture, with the experience and capability to conduct the testing indicated and that specializes in types of tests to be performed.

C. Soil Analysis: For each unamended soil type, furnish soil analysis and a written report by a qualified soil-testing laboratory stating percentages of organic matter; gradation of sand, silt, and clay content; cation exchange capacity; deleterious material; pH; and mineral and plant-nutrient content of the soil.

1. Testing methods and written recommendations shall comply with USDA's Handbook No. 60.

2. The soil-testing laboratory shall oversee soil sampling, with depth, location, and number of samples to be taken per instructions from Architect. A minimum of three representative samples shall be taken from varied locations for each soil to be used or amended for planting purposes.

3. Report suitability of tested soil for turf growth.

   a. Based on the test results, state recommendations for soil treatments and soil amendments to be incorporated. State recommended quantities of nitrogen, phosphorus, and potash nutrients and soil amendments to be added to produce satisfactory planting soil suitable for healthy, viable plants.

   b. Report presence of problem salts, minerals, or heavy metals, including aluminum, arsenic, barium, cadmium, chromium, cobalt, lead, lithium, and vanadium. If such problem materials are present, provide additional recommendations for corrective action.

D. Preinstallation Conference: Conduct conference at Project site to comply with requirements in Division 01 Section "Project Management and Coordination."

1.07 DELIVERY, STORAGE, AND HANDLING

A. Seed and Other Packaged Materials: Deliver packaged materials in original, unopened containers showing weight, certified analysis, name and address of manufacturer, and indication of conformance with state and federal laws, as applicable.

B. Bulk Materials:

1. Do not dump or store bulk materials near structures, utilities, walkways and pavements, or on existing turf areas or plants.

2. Provide erosion-control measures to prevent erosion or displacement of bulk materials, discharge of soil-bearing water runoff, and airborne dust reaching adjacent properties, water conveyance systems, or walkways.

3. Accompany each delivery of bulk fertilizers, lime, and soil amendments with appropriate certificates.

1.08 PROJECT CONDITIONS

A. Planting Restrictions: Plant during one of the following periods. Coordinate planting periods with initial maintenance periods to provide required maintenance from date of Substantial Completion.

1. Spring Planting: April 1 to June 1.

2. Fall Planting: September 1 to November 1.

3. All plantings installed between June 2 and August 31 shall have watering schedule maintained by Contractor until accepted by Owner.

B. Weather Limitations: Proceed with planting only when existing and forecasted weather conditions permit planting to be performed when beneficial and optimum results may be obtained. Apply products during favorable weather conditions according to manufacturer's written instructions.

1.09 MAINTENANCE SERVICE

A. Initial Turf Maintenance Service: Provide full maintenance by skilled employees of landscape Installer. Maintain as required in Part 3. Begin maintenance immediately after each area is planted and continue until acceptable turf is established but for not less than the following periods:

1. Seeded Turf: Maintenance is the responsibility of the Contractor until Project Closeout.

a. When initial maintenance period has not elapsed before end of planting season, or if turf is not fully established, continue maintenance during next planting season.

PART 2 PRODUCTS

2.01 SEED

A. Grass Seed: Fresh, clean, dry, new-crop seed complying with AOSA's "Journal of Seed Technology; Rules for Testing Seeds" for purity and germination tolerances.

B. Seed Species: State-certified seed of grass species as follows:

1. COMMERCIAL SITE MIX:

COMMON NAME	BOTANICAL NAME	PROP BY WT	MIN PURITY	MIN GERM	APPL RATE
MANHATTAN III PERENNIAL RYEGRASS	LOLIUM PERIENNE 'MANHATTAN III'	20%	98%	90%	300 LB/AC
MILLENIUM TALL FESCUE	FESTUCA ARUNDNACEA 'MILLENIUM'	35%	98%	90%	200 LB/AC
JAGUAR 3 TALL FESCUE	FESTUCA ARUNDINACEA 'JAGUAR 3'	35%	98%	85%	300 LB/AC
KENTUCKY BLUEGRASS	POA PRATENSIS 'COMMON'	10%	95%	80%	300 LB/AC

2. NO MOW SEED MIX:

a. Eco Lawn by Wildflower Farm.

b. No-Mow Lawn Mix by Prairie Nursery.

c. No-Mow-Low Grow Lawn Seed by Ion Exchange.

2.02 INORGANIC SOIL AMENDMENTS

A. Lime: Shall be ground limestone (Dolomite) containing not less than 85 percent of total carbonates and shall be ground to such a fineness that 50 percent will pass through a 100-mesh sieve and 90 percent will pass through a 20-mesh sieve. Coarser material shall be acceptable, provided the specified rates of application are increase proportionately on the basis of quantities passing the 100-mesh sieve.

B. Sulfur: Granular, biodegradable, containing a minimum of 90 percent sulfur, and with a minimum of 99 percent passing through No. 6 sieve and a maximum of 10 percent passing through No. 40 sieve.

C. Iron Sulfate: Granulated ferrous sulfate containing a minimum of 20 percent iron and 10 percent sulfur.

D. Aluminum Sulfate: Commercial grade, unadulterated.

E. Perlite: Horticultural perlite, soil amendment grade.

F. Agricultural Gypsum: Minimum 90 percent calcium sulfate, finely ground with 90 percent passing through No. 50 sieve.

G. Sand: Clean, washed, natural or manufactured, and free of toxic materials.

2.03 ORGANIC SOIL AMENDMENTS

A. Compost: Well-composted, stable, and weed-free organic matter, pH range of 5.5 to 8; moisture content 35 to 55 percent by weight; 100 percent passing through 1/2-inch sieve;

soluble salt content of less than 2.5 decisiemens/m or 1.25 decisiemens/m where seeds, young seedlings, or salt-sensitive plants are used; not exceeding 0.5 percent inert contaminants and free of substances toxic to plantings; and as follows:

1. Organic Matter Content: 50 to 60 percent of dry weight.

B. Muck Peat: Partially decomposed moss peat, native peat, or reed-sedge peat, finely divided or of granular texture, with a pH range of 6 to 7.5, and having a water-absorbing capacity of 1100 to 2000 percent.

C. Wood Derivatives: Decomposed, nitrogen-treated sawdust, ground bark, or wood waste; of uniform texture and free of chips, stones, sticks, soil, or toxic materials.

D. Manure: Well-rotted, unleached, stable or cattle manure containing not more than 25 percent by volume of straw, sawdust, or other bedding materials; free of toxic substances, stones, sticks, soil, weed seed, and material harmful to plant growth.

2.04 FERTILIZERS

A. Bonemeal: Commercial, raw or steamed, finely ground; a minimum of 4 percent nitrogen and 20 percent phosphoric acid.

B. Commercial Fertilizer: Commercial-grade complete fertilizer of neutral character, consisting of fast- and slow-release nitrogen, 50 percent derived from natural organic sources of urea formaldehyde, phosphorous, and potassium in the following composition:

1. Composition: Nitrogen, phosphorous, and potassium in amounts recommended in soil reports from a qualified soil-testing laboratory.

C. Slow-Release Fertilizer: Granular or pelleted fertilizer consisting of 50 percent water-insoluble nitrogen, phosphorus, and potassium in the following composition:

1. Composition: Nitrogen, phosphorous, and potassium in amounts recommended in soil reports from a qualified soil-testing laboratory.

2.05 PLANTING SOILS

A. Planting Soil: Existing, native surface topsoil formed under natural conditions with the duff layer retained during excavation process. Verify suitability of native surface topsoil to produce viable planting soil. Clean soil of roots, plants, sod, stones, clay lumps, and other extraneous materials harmful to plant growth.

1. Supplement with imported topsoil or manufactured topsoil from off-site sources when quantities are insufficient.

2. Mix existing, native surface topsoil and/or imported or manufactured topsoil from off-site sources with the following soil amendments and fertilizers in the following quantities to produce planting soil:

a. Ratio of Loose Compost to Topsoil by Volume: 1:3.

b. Ratio of Loose Muck Peat to Topsoil by Volume: Per topsoil analysis.

c. Ratio of Loose Wood Derivatives to Topsoil by Volume: Per topsoil analysis.

d. Weight of Lime per 1000 Sq. Ft.: per topsoil analysis.

e. Weight of Sulfur, Iron Sulfate, Aluminum Sulfate per 1000 Sq. Ft.: Per topsoil analysis.

f. Weight of Agricultural Gypsum per 1000 Sq. Ft.: Per topsoil analysis.

g. Volume of Sand per 1000 Sq. Ft.: Per topsoil analysis.

h. Weight of Bonemeal per 1000 Sq. Ft.: Per topsoil analysis.

i. Weight of Commercial Fertilizer per 1000 Sq. Ft.: Per manufacturer's recommendations.

j. Weight of Slow-Release Fertilizer per 1000 Sq. Ft.: Per manufacturer's recommendations.

B. Supplemental Planting Soil: Imported topsoil or manufactured topsoil from off-site sources. Obtain topsoil displaced from naturally well-drained construction or mining sites where topsoil occurs at least 4 inches deep; do not obtain from bogs or marshes.

1. Additional Properties of Imported Topsoil or Manufactured Topsoil: Screened and free of stones 1/2 inch or larger in any dimension; free of roots, plants, sod, clods, clay lumps, pockets of coarse sand, paint, paint washout, concrete slurry, concrete layers or chunks, cement, plaster, building debris, oils, gasoline, diesel fuel, paint thinner, turpentine, tar, roofing compound, acid, and other extraneous materials harmful to plant growth; free of obnoxious weeds and invasive plants including quackgrass, Johnsongrass, poison ivy, nutsedge, nimblewill, Canada thistle, bindweed, bentgrass, wild garlic, ground ivy, perennial sorrel, and bromegrass; not infested with nematodes, grubs, other pests, pest eggs, or other undesirable organisms and disease-causing plant pathogens; friable and with sufficient structure to give good tilth and aeration. Continuous, air-filled, pore-space content on a volume/volume basis shall be at least 15 percent when moisture is present at field capacity. Soil shall have a field capacity of at least 15 percent on a dry weight basis.

2. Mix imported or manufactured topsoil from off-site sources with the following soil amendments and fertilizers in the following quantities to produce planting soil:

a. Ratio of Loose Compost to Topsoil by Volume: 1:3.

b. Ratio of Loose Muck Peat to Topsoil by Volume: Per topsoil analysis.

c. Ratio of Loose Wood Derivatives to Topsoil by Volume: Per topsoil analysis.

d. Weight of Lime per 1000 Sq. Ft.: per topsoil analysis.

e. Weight of Sulfur,. Iron Sulfate,, Aluminum Sulfate per 1000 Sq. Ft.: Per topsoil analysis.

f. Weight of Agricultural Gypsum per 1000 Sq. Ft.: Per topsoil analysis.

g. Volume of Sand per 1000 Sq. Ft.: Per topsoil analysis.

h. Weight of Bonemeal per 1000 Sq. Ft.: Per topsoil analysis.

i. Weight of Commercial Fertilizer per 1000 Sq. Ft.: Per manufacturer's recommendations.

j. Weight of Slow-Release Fertilizer per 1000 Sq. Ft.: Per manufacturer's recommendations.

2.06 MULCHES

A. Straw Mulch: Provide air-dry, clean, mildew- and seed-free, salt hay or threshed straw of wheat, rye, oats, or barley.

B. Compost Mulch: Well-composted, stable, and weed-free organic matter, pH range of 5.5 to 8; moisture content 35 to 55 percent by weight; 100 percent passing through 1/2-inch sieve; soluble salt content of less than 2.5 decisiemens/m or 1.25 decisiemens/m where seeds, young seedlings or salt-sensitive plants are used; not exceeding 0.5 percent inert contaminants and free of substances toxic to plantings; and as follows:

1. Organic Matter Content: 50 to 60 percent of dry weight.

C. Fiber Mulch: Biodegradable, dyed-wood, cellulose-fiber mulch; nontoxic and free of plant-growth or germination inhibitors; with a maximum moisture content of 15 percent and a pH range of 4.5 to 6.5.

D. Nonasphaltic Tackifier: Colloidal tackifier recommended by fiber-mulch manufacturer for slurry application; nontoxic and free of plant-growth or germination inhibitors.

E. Asphalt Emulsion: ASTM D 977, Grade SS-1; nontoxic and free of plant-growth or germination inhibitors.

2.07 PESTICIDES

A. General: Pesticide, registered and approved by EPA, acceptable to authorities having jurisdiction, and of type recommended by manufacturer for each specific problem and as required for Project conditions and application. Do not use restricted pesticides unless authorized in writing by authorities having jurisdiction.

B. Pre-Emergent Herbicide (Selective and Non-Selective): Effective for controlling the germination or growth of weeds within planted areas at the soil level directly below the mulch layer.

C. Post-Emergent Herbicide (Selective and Non-Selective): Effective for controlling weed growth that has already germinated.

2.08 EROSION-CONTROL MATERIALS

A. Erosion-Control Matting: Biodegradable wood excelsior, straw, or coconut-fiber mat enclosed in a photodegradable plastic mesh. Include manufacturer's recommended steel wire staples, 6 inches long.

PART 3 EXECUTION

3.01 EXAMINATION

A. Examine areas to be planted for compliance with requirements and other conditions affecting performance.

1. Verify that no foreign or deleterious material or liquid such as paint, paint washout, concrete slurry, concrete layers or chunks, cement, plaster, oils, gasoline, diesel fuel, paint thinner, turpentine, tar, roofing compound, or acid has been deposited in soil within a planting area.

2. Do not mix or place soils and soil amendments in frozen, wet, or muddy conditions.

3. Suspend soil spreading, grading, and tilling operations during periods of excessive soil moisture until the moisture content reaches acceptable levels to attain the required results.

4. Uniformly moisten excessively dry soil that is not workable and which is too dusty.

B. Proceed with installation only after unsatisfactory conditions have been corrected.

C. If contamination by foreign or deleterious material or liquid is present in soil within a planting area, remove the soil and contamination as directed by Architect and replace with new planting soil.

3.02 PREPARATION

A. Protect structures, utilities, sidewalks, pavements, and other facilities, trees, shrubs, and plantings from damage caused by planting operations.

1. Protect adjacent and adjoining areas from hydroseeding and hydromulching overspray.

2. Protect grade stakes set by others until directed to remove them.

B. Install erosion-control measures to prevent erosion or displacement of soils and discharge of soil-bearing water runoff or airborne dust to adjacent properties and walkways.

3.03 TURF AREA PREPARATION

A. Limit turf subgrade preparation to areas to be planted within 7 days.

B. Newly Graded Subgrades: Loosen subgrade to a minimum depth of 4 inches. Remove foreign material larger than 1/2- inch including, but not limited to: in any dimension, sticks, roots, rubbish, and other extraneous matter and legally dispose of them off Owner's property.

1. Apply fertilizer directly to subgrade before loosening in areas to receive lawn seed. Do not apply fertilizer to areas to receive no-mow seed mix.

2. Thoroughly blend planting soil off-site before spreading or spread topsoil, apply soil amendments and fertilizer on surface, and thoroughly blend planting soil.

a. Delay mixing fertilizer with planting soil if planting will not proceed within 2 days.

b. Mix lime with dry soil before mixing fertilizer.

3. Spread planting soil to a depth of 6 inches but not less than required to meet finish grades after light rolling and natural settlement. Do not spread if planting soil or subgrade is frozen, muddy, or excessively wet.

a. Spread approximately 1/2 the thickness of planting soil over loosened subgrade. Mix thoroughly into top 4 inches of subgrade. Spread remainder of planting soil.

C. Unchanged Subgrades: If turf is to be planted in areas unaltered or undisturbed by excavating, grading, or surface-soil stripping operations, prepare surface soil as follows:

1. Remove existing grass, vegetation, and turf. Do not mix into surface soil.

2. Loosen surface soil to a depth of at least 6 inches. Apply soil amendments and fertilizers according to planting soil mix proportions and mix thoroughly into top 4 inches of soil. Till soil to a homogeneous mixture of fine texture.

a. Apply fertilizer directly to surface soil before loosening in areas to receive lawn seed. Do not apply fertilizer to areas to receive no-mow seed mix.

3. Remove stones larger than 1/2 inch in any dimension including but not limited to: stones, sticks, roots, trash, and other extraneous matter.

4. Legally dispose of waste material, including grass, vegetation, and turf, off Owner's property.

D. Finish Grading: Grade planting areas to a smooth, uniform surface plane with loose, uniformly fine texture. Grade to within plus or minus 1/2 inch of finish elevation. Roll and rake, remove ridges, and fill depressions to meet finish grades. Limit finish grading to areas that can be planted in the immediate future.

E. Moisten prepared area before planting if soil is dry. Water thoroughly and allow surface to dry before planting. Do not create muddy soil.

F. Before planting, obtain Owner's and Landscape Architect's/Owner's Representative acceptance of finish grading; restore planting areas if eroded or otherwise disturbed after finish grading.

3.04 PREPARATION FOR EROSION-CONTROL MATERIALS

A. Prepare area as specified in "Turf Area Preparation" Article.

B. For erosion-control matting, install from top of slope, working downward, and as recommended by material manufacturer for site conditions. Fasten as recommended by material manufacturer.

C. Moisten prepared area before planting if surface is dry. Water thoroughly and allow surface to dry before planting. Do not create muddy soil.

3.05 SEEDING

A. Sow seed with spreader or seeding machine. Do not broadcast or drop seed when wind velocity exceeds 5 mph. Evenly distribute seed by sowing equal quantities in two directions at right angles to each other.

   1. Do not use wet seed or seed that is moldy or otherwise damaged.

   2. Do not seed against existing trees. Limit extent of seed to outside edge of planting saucer.

B. Sow seed at the application rate required of seed species in Part 2.

C. Rake seed lightly into top 1/8 inch of soil, roll lightly, and water with fine spray.

D. Protect seeded areas with slopes exceeding 1:6 with erosion-control matting installed and stapled according to manufacturer's written instructions.

E. Protect seeded areas with erosion-control mats where shown on Drawings; install and anchor according to manufacturer's written instructions.

F. Protect seeded areas with slopes not exceeding 1:6 by spreading straw mulch. Spread uniformly at a minimum rate of 2 tons/acre to form a continuous blanket 1-1/2 inches in loose thickness (1 inch in no-mow mix seeded areas) over seeded areas. Spread by hand, blower, or other suitable equipment.

   1. Anchor straw mulch by crimping into soil with suitable mechanical equipment.

   2. Bond straw mulch by spraying with asphalt emulsion at a rate of 10 to 13 gal. /1000 sq. ft. Take precautions to prevent damage or staining of structures or other plantings adjacent to mulched areas. Immediately clean damaged or stained areas.

3.06 HYDROSEEDING

A. Hydroseeding: Mix specified seed, fertilizer, and fiber mulch in water, using equipment specifically designed for hydroseed application. Continue mixing until uniformly blended into homogeneous slurry suitable for hydraulic application.

   1. Mix slurry with fiber-mulch manufacturer's recommended tackifier.

   2. Apply slurry uniformly to all areas to be seeded in a one-step process. Apply slurry at a rate so that mulch component is deposited at not less than 1500-lb/acre dry weight, and seed component is deposited at not less than the specified seed-sowing rate.

3.07 TURF RENOVATION

A. Renovate existing turf damaged by Contractor's operations, such as storage of materials or equipment and movement of vehicles.

   1. Reestablish turf where settlement or washouts occur or where minor regrading is required.

   2. Install new planting soil as required.

B. Remove sod and vegetation from diseased or unsatisfactory turf areas; do not bury in soil.

C. Remove topsoil containing foreign materials such as oil drippings, fuel spills, stones, gravel, and other construction materials resulting from Contractor's operations, and replace with new planting soil.

D. Mow, dethatch, core aerate, and rake existing turf.

E. Remove weeds before seeding. Where weeds are extensive, apply selective herbicides as required. Do not use pre-emergence herbicides.

F. Remove waste and foreign materials, including weeds, soil cores, grass, vegetation, and turf, and legally dispose of them off Owner's property.

G. Till stripped, bare, and compacted areas thoroughly to a soil depth of 6 inches.

H. Apply soil amendments and initial fertilizers required for establishing new turf and mix thoroughly into top 4 inches of existing soil. Install new planting soil to fill low spots and meet finish grades.

I. Apply seed and protect with straw mulch as required for new turf.

J. Water newly planted areas and keep moist until new turf is established.

3.08 TURF MAINTENANCE

A. Maintain and establish turf by watering, fertilizing, weeding, mowing, trimming, replanting, and performing other operations as required to establish healthy, viable turf. Roll, regrade, and replant bare or eroded areas and remulch to produce a uniformly smooth turf. Provide materials and installation the same as those used in the original installation.

1. Fill in as necessary soil subsidence that may occur because of settling or other processes. Replace materials and turf damaged or lost in areas of subsidence.

2. In areas where mulch has been disturbed by wind or maintenance operations, add new mulch and anchor as required to prevent displacement.

3. Apply treatments as required to keep turf and soil free of pests and pathogens or disease. Use integrated pest management practices whenever possible to minimize the use of pesticides and reduce hazards.

B. Watering: Install and maintain temporary piping, hoses, and turf-watering equipment to convey water from sources and to keep turf uniformly moist to a depth of 4 inches.

1. Schedule watering to prevent wilting, puddling, erosion, and displacement of seed or mulch. Lay out temporary watering system to avoid walking over muddy or newly planted areas.

2. Water turf with fine spray at a minimum rate of 1 inch per week unless rainfall precipitation is adequate.

C. Mow turf as soon as top growth is tall enough to cut. Repeat mowing to maintain specified height without cutting more than 1/3 of grass height. Remove no more than 1/3 of grass-leaf growth in initial or subsequent mowings. Do not delay mowing until grass blades bend over and become matted. Do not mow when grass is wet. Schedule initial and subsequent mowings to maintain the following grass height:

1. 2½ to 3 inches.

D. Turf Postfertilization: Apply fertilizer after initial mowing and when grass is dry.

1. Use fertilizer that will provide actual nitrogen of at least 1 lb/1000 sq. ft. or as recommended by topsoil analysis to turf area.

3.09 SATISFACTORY TURF

A. Turf installations shall meet the following criteria as determined by Landscape Architect/Owner's Representative.

1. Satisfactory Seeded Turf: At end of maintenance period, a healthy, uniform, close stand of grass has been established, free of weeds and surface irregularities, with coverage exceeding 90 percent over any 10 sq. ft. and bare spots not exceeding 5 by 5 inches .

B. Use specified materials to reestablish turf that does not comply with requirements and continue maintenance until turf is satisfactory.

3.10 PESTICIDE APPLICATION

A. Apply pesticides and other chemical products and biological control agents in accordance with requirements of authorities having jurisdiction and manufacturer's written recommendations.

Coordinate applications with Owner's operations and others in proximity to the Work. Notify Owner before each application is performed.

B. Post-Emergent Herbicides (Selective and Non-Selective): Apply only as necessary to treat already-germinated weeds and in accordance with manufacturer's written recommendations.

3.11 CLEANUP AND PROTECTION

A. Promptly remove soil and debris created by turf work from paved areas. Clean wheels of vehicles before leaving site to avoid tracking soil onto roads, walks, or other paved areas.

B. Erect temporary fencing or barricades and warning signs as required to protect newly planted areas from traffic. Maintain fencing and barricades throughout initial maintenance period and remove after plantings are established.

C. Remove nondegradable erosion-control measures after grass establishment period.

END OF SECTION 32 92 00

SECTION 32 93 00

PLANTS

PART 1 GENERAL

1.01 RELATED DOCUMENTS

A. Drawings and general provisions of the Contract, including General and Supplementary Conditions and Division 01 Specification Sections, apply to this Section.

1.02 SUMMARY

A. Section Includes:

1. Plants.
2. Planting soils.
3. Tree stabilization.

B. Related Sections:

1. Section 01 56 39 "Temporary Tree and Plant Protection" for protecting, trimming, pruning, repairing, and replacing existing trees to remain that interfere with, or are affected by, execution of the Work.
2. Section 31 10 00 "Site Clearing" for protection of existing trees and plantings, topsoil stripping and stockpiling, and site clearing.
3. Section 31 20 00 "Earth Moving" for excavation, filling, and rough grading and for subsurface aggregate drainage and drainage backfill materials.
4. Section 32 92 00 "Turf and Grasses" for turf (lawn) planting, hydroseeding, and erosion-control materials.
5. Section 33 46 00 "Subdrainage" for below-grade drainage of landscaped areas, paved areas, and wall perimeters.

1.03 DEFINITIONS

A. Backfill: The earth used to replace or the act of replacing earth in an excavation.

B. Balled and Burlapped Stock: Plants dug with firm, natural balls of earth in which they were grown, with ball size not less than diameter and depth recommended by ANSI Z60.1 for type and size of plant required; wrapped with burlap, tied, rigidly supported, and drum laced with twine with the root flare visible at the surface of the ball as recommended by ANSI Z60.1.

C. Balled and Potted Stock: Plants dug with firm, natural balls of earth in which they are grown and placed, unbroken, in a container. Ball size is not less than diameter and depth recommended by ANSI Z60.1 for type and size of plant required.

D. Bare-Root Stock: Plants with a well-branched, fibrous-root system developed by transplanting or root pruning, with soil or growing medium removed, and with not less than minimum root spread according to ANSI Z60.1 for type and size of plant required.

E. Clump: Where three or more young trees were planted in a group and have grown together as a single tree having three or more main stems or trunks.

F. Container-Grown Stock: Healthy, vigorous, well-rooted plants grown in a container, with a well-established root system reaching sides of container and maintaining a firm ball when removed from container. Container shall be rigid enough to hold ball shape and protect root mass during shipping and be sized according to ANSI Z60.1 for type and size of plant required.

G. Duff Layer: The surface layer of native topsoil that is composed of mostly decayed leaves, twigs, and detritus.

H. Finish Grade: Elevation of finished surface of planting soil.

I. Manufactured Topsoil: Soil produced off-site by homogeneously blending mineral soils or sand with stabilized organic soil amendments to produce topsoil or planting soil.

J. Multi-Stem: Where three or more main stems arise from the ground from a single root crown or at a point right above the root crown.

K. Pesticide: A substance or mixture intended for preventing, destroying, repelling, or mitigating a pest. This includes insecticides, miticides, herbicides, fungicides, rodenticides, and molluscicides. It also includes substances or mixtures intended for use as a plant regulator, defoliant, or desiccant.

L. Pests: Living organisms that occur where they are not desired, or that cause damage to plants, animals, or people. These include insects, mites, grubs, mollusks (snails and slugs), rodents (gophers, moles, and mice), unwanted plants (weeds), fungi, bacteria, and viruses.

M. Planting Area: Areas to be planted.

N. Planting Soil: Standardized topsoil; existing, native surface topsoil; existing, in-place surface soil; imported topsoil; or manufactured topsoil that is modified with soil amendments and perhaps fertilizers to produce a soil mixture best for plant growth.

O. Plant; Plants; Plant Material: These terms refer to vegetation in general, including trees, shrubs, vines, ground covers, ornamental grasses, bulbs, corms, tubers, or herbaceous vegetation.

P. Root Flare: Also called "trunk flare." The area at the base of the plant's stem or trunk where the stem or trunk broadens to form roots; the area of transition between the root system and the stem or trunk.

Q. Stem Girdling Roots: Roots that encircle the stems (trunks) of trees below the soil surface.

R. Subgrade: Surface or elevation of subsoil remaining after excavation is complete, or the top surface of a fill or backfill before planting soil is placed.

S. Subsoil: All soil beneath the topsoil layer of the soil profile, and typified by the lack of organic matter and soil organisms.

T. Surface Soil: Soil that is present at the top layer of the existing soil profile at the Project site. In undisturbed areas, the surface soil is typically topsoil; but in disturbed areas such as urban environments, the surface soil can be subsoil.

1.04 ACTION SUBMITTALS

A. Product Data: For each type of product indicated, including soils.

B. Samples for Verification: For each of the following:

1. Mulch: 1-pint volume of each organic mulch required; in sealed plastic bags labeled with composition of materials by percentage of weight and source of mulch. Each Sample shall be typical of the lot of material to be furnished; provide an accurate representation of color, texture, and organic makeup.

2. Root Barrier: Width of panel by 12 inches.

1.05 INFORMATIONAL SUBMITTALS

A. Qualification Data: For qualified landscape Installer. Include list of similar projects completed by Installer demonstrating Installer's capabilities and experience. Include project names, addresses, and year completed, and include names and addresses of owners' contact persons.

B. Product Certificates: For each type of manufactured product, from manufacturer, and complying with the following:

1. Manufacturer's certified analysis of standard products.

2. Analysis of other materials by a recognized laboratory made according to methods established by the Association of Official Analytical Chemists, where applicable.

C. Material Test Reports: For existing native surface topsoil and imported or manufactured topsoil if required due to insufficient quantity or quality of stockpiled material.

D. Maintenance Instructions: Recommended procedures to be established by Owner for maintenance of plants during a calendar year. Submit before start of required maintenance periods.

E. Warranty: Sample of special warranty.

1.06 QUALITY ASSURANCE

A. Installer Qualifications: A qualified landscape Installer whose work has resulted in successful establishment of plants.

1. Professional Membership: Installer shall be a member in good standing of either the Professional Landcare Network or the American Nursery and Landscape Association.

2. Experience: Five years' experience in landscape installation in addition to requirements in Section 01 40 00 "Quality Requirements."

3. Installer's Field Supervision: Require Installer to maintain an experienced full-time supervisor on Project site when work is in progress.

4. Personnel Certifications: Installer's field supervisor shall have certification in **[one of]** the following categories from the Professional Landcare Network:

a. Certified Landscape Technician - Exterior, with installation specialty area(s), designated CLT-Exterior.

b. Certified Ornamental Landscape Professional designated COLP.

5. Pesticide Applicator: State licensed, commercial.

B. Soil-Testing Laboratory Qualifications: An independent or university laboratory, recognized by the State Department of Agriculture, with the experience and capability to conduct the testing indicated and that specializes in types of tests to be performed.

C. Soil Analysis: For each unamended soil type, furnish soil analysis and a written report by a qualified soil-testing laboratory stating percentages of organic matter; gradation of sand, silt, and clay content; cation exchange capacity; deleterious material; pH; and mineral and plant-nutrient content of the soil.

1. Testing methods and written recommendations shall comply with USDA's Handbook No. 60.

2. The soil-testing laboratory shall oversee soil sampling; with depth, location, and number of samples to be taken per instructions from Landscape Architect/Owner's Representative. A minimum of three representative samples shall be taken from varied locations for each soil to be used or amended for planting purposes.

3. Report suitability of tested soil for plant growth.

a. Based upon the test results, state recommendations for soil treatments and soil amendments to be incorporated. State recommendations in weight per 1000 sq. ft. or volume per cu. yd. for nitrogen, phosphorus, and potash nutrients and soil amendments to be added to produce satisfactory planting soil suitable for healthy, viable plants.

D. Provide quality, size, genus, species, and variety of plants indicated, complying with applicable requirements in ANSI Z60.1.

1. Selection of plants purchased under allowances will be made by Landscape Architect/Owner's Representative, who will tag plants at their place of growth before they are prepared for transplanting.

E. Measurements: Measure according to ANSI Z60.1. Do not prune to obtain required sizes.

1. Trees and Shrubs: Measure with branches and trunks or canes in their normal position. Take height measurements from or near the top of the root flare for field-grown stock and container grown stock. Measure main body of tree or shrub for height and spread; do not measure branches or roots tip to tip. Take caliper measurements 6 inches above the root flare for trees up to 4-inch caliper size, and 12 inches above the root flare for larger sizes.

2. Other Plants: Measure with stems, petioles, and foliage in their normal position.

F. Plant Material Observation: Architect may observe plant material either at place of growth or at site before planting for compliance with requirements for genus, species, variety, cultivar, size, and quality. Landscape Architect/Owner's Representative retains right to observe trees and shrubs further for size and condition of balls and root systems, pests, disease symptoms, injuries, and latent defects and to reject unsatisfactory or defective material at any time during progress of work. Remove rejected trees or shrubs immediately from Project site.

1. Notify Landscape Architect/Owner's Representative of sources of planting materials seven days in advance of delivery to site.

G. Preinstallation Conference: Conduct conference at Project site to comply with Division 01 Section "Project Management and Coordination."

1.07 DELIVERY, STORAGE, AND HANDLING

A. Packaged Materials: Deliver packaged materials in original, unopened containers showing weight, certified analysis, name and address of manufacturer, and indication of conformance with state and federal laws if applicable.

B. Bulk Materials:

1. Do not dump or store bulk materials near structures, utilities, walkways and pavements, or on existing turf areas or plants.

2. Provide erosion-control measures to prevent erosion or displacement of bulk materials, discharge of soil-bearing water runoff, and airborne dust reaching adjacent properties, water conveyance systems, or walkways.

3. Accompany each delivery of bulk fertilizers, lime, and soil amendments with appropriate certificates.

C. Do not prune trees and shrubs before delivery. Protect bark, branches, and root systems from sun scald, drying, wind burn, sweating, whipping, and other handling and tying damage. Do not bend or bind-tie trees or shrubs in such a manner as to destroy their natural shape. Provide protective covering of plants during shipping and delivery. Do not drop plants during delivery and handling.

D. Handle planting stock by root ball.

E. Store bulbs, corms, and tubers in a dry place at 60 to 65 deg F until planting.

F. Deliver plants after preparations for planting have been completed, and install immediately. If planting is delayed more than six hours after delivery, set plants and trees in their appropriate aspect (sun, filtered sun, or shade), protect from weather and mechanical damage, and keep roots moist.

1. Set balled stock on ground and cover ball with soil, peat moss, sawdust, or other acceptable material.

2. Do not remove container-grown stock from containers before time of planting.

3. Water root systems of plants stored on-site deeply and thoroughly with a fine-mist spray. Water as often as necessary to maintain root systems in a moist, but not overly-wet condition.

1.08 PROJECT CONDITIONS

A. Field Measurements: Verify actual grade elevations, service and utility locations, irrigation system components, and dimensions of plantings and construction contiguous with new plantings by field measurements before proceeding with planting work.

B. Interruption of Existing Services or Utilities: Do not interrupt services or utilities to facilities occupied by Owner or others unless permitted under the following conditions and then only after arranging to provide temporary services or utilities according to requirements indicated:

1. Notify Architect/Owner's Representative no fewer than two days in advance of proposed interruption of each service or utility.

2. Do not proceed with interruption of services or utilities without Architect/Owner's Representative written permission.

C. Planting Restrictions: Plant during one of the following periods. Coordinate planting periods with maintenance periods to provide required maintenance from date of Substantial Completion.

1. Spring Planting: April 1 to June 1.

2. Fall Planting: September 1 to November 1.

3. All plantings done between June 2 and August 31 shall be wilt-proof (or approved equivalent) and watering schedule shall be maintained by Contractor until acceptance by Owner.

D. Weather Limitations: Proceed with planting only when existing and forecasted weather conditions permit planting to be performed when beneficial and optimum results may be obtained. Apply products during favorable weather conditions according to manufacturer's written instructions and warranty requirements.

E. Coordination with Lawns: Plant trees, shrubs, and other plants after finish grades are established and before planting lawn unless otherwise indicated.

1. When planting trees, shrubs, and other plants after planting lawn areas, protect lawn areas, and promptly repair damage caused by planting operations.

1.09 WARRANTY

A. Special Warranty: Installer agrees to repair or replace plantings and accessories that fail in materials, workmanship, or growth within specified warranty period.

1. Failures include, but are not limited to, the following:

a. Death and unsatisfactory growth, except for defects resulting from abuse, lack of adequate maintenance, or neglect by Owner, or incidents that are beyond Contractor's control.

b. Structural failures including plantings falling or blowing over.

c. Faulty performance of tree stabilization.

d. Deterioration of metals, metal finishes, and other materials beyond normal weathering.

2. Warranty Periods from Date of Substantial Completion :

a. Trees, Shrubs, Vines, and Ornamental Grasses: 12 months.

b. Ground Covers, Biennials, Perennials, and Other Plants: 12 months.

3. Include the following remedial actions as a minimum:

a. Immediately remove dead plants and replace unless required to plant in the succeeding planting season.

b. Replace plants that are more than 25 percent dead or in an unhealthy condition at end of warranty period.

c. A limit of one replacement of each plant will be required except for losses or replacements due to failure to comply with requirements.

d. Provide extended warranty for period equal to original warranty period, for replaced plant material.

1.10 MAINTENANCE SERVICE

A. Initial Maintenance Service for Trees and Shrubs: Provide maintenance by skilled employees of landscape Installer. Maintain as required in Part 3. Begin maintenance immediately after plants are installed and continue until plantings are acceptably healthy and well established but for not less than maintenance period below.

1. Maintenance Period: 12 months from date of Substantial Completion.

B. Initial Maintenance Service for Ground Cover and Other Plants: Provide maintenance by skilled employees of landscape Installer. Maintain as required in Part 3. Begin maintenance immediately after plants are installed and continue until plantings are acceptably healthy and well established but for not less than maintenance period below.

1. Maintenance Period: 12 months from date of Substantial Completion.

PART 2 PRODUCTS

2.01 PLANT MATERIAL

A. General: Furnish nursery-grown plants true to genus, species, variety, cultivar, stem form, shearing, and other features indicated in Plant Schedule or Plant Legend shown on Drawings and complying with ANSI Z60.1; and with healthy root systems developed by transplanting or root pruning. Provide well-shaped, fully branched, healthy, vigorous stock, densely foliated when in leaf and free of disease, pests, eggs, larvae, and defects such as knots, sun scald, injuries, abrasions, and disfigurement.

1. Trees with damaged, crooked, or multiple leaders; tight vertical branches where bark is squeezed between two branches or between branch and trunk ("included bark"); crossing trunks; cut-off limbs more than 3/4 inch in diameter; or with stem girdling roots will be rejected.

2. Collected Stock: Do not use plants harvested from the wild, from native stands, from an established landscape planting, or not grown in a nursery unless otherwise indicated.

B. Provide plants of sizes, grades, and ball or container sizes complying with ANSI Z60.1 for types and form of plants required. Plants of a larger size may be used if acceptable to Architect, with a proportionate increase in size of roots or balls.

C. Root-Ball Depth: Furnish trees and shrubs with root balls measured from top of root ball, which shall begin at root flare according to ANSI Z60.1. Root flare shall be visible before planting.

D. Labeling: Label each plant of each variety, size, and caliper with a securely attached, waterproof tag bearing legible designation of common name and full scientific name, including genus and species. Include nomenclature for hybrid, variety, or cultivar, if applicable for the plant as shown on Drawings.

E. If formal arrangements or consecutive order of plants is shown on Drawings, select stock for uniform height and spread, and number the labels to assure symmetry in planting.

2.02 INORGANIC SOIL AMENDMENTS

A. Lime: Shall be ground limestone (Dolomite) containing not less than 85 percent of total carbonates and shall be ground to such fineness that 50-percent will pass through a 100-mesh sieve and 90 percent will pass through a 20-mesh sieve. Coarser material shall be acceptable, provided the specified rates of application are increased proportionately on the basis of quantities passing the 100-mesh sieve.

B. Sulfur: Granular, biodegradable, and containing a minimum of 90 percent sulfur, with a minimum of 99 percent passing through No. 6 sieve and a maximum of 10 percent passing through No. 40 sieve.

C. Iron Sulfate: Granulated ferrous sulfate containing a minimum of 20 percent iron and 10 percent sulfur.

D. Aluminum Sulfate: Commercial grade, unadulterated.

E. Perlite: Horticultural perlite, soil amendment grade.

F. Agricultural Gypsum: Minimum 90 percent calcium sulfate, finely ground with 90 percent passing through No. 50 sieve.

G. Sand: Clean, washed, natural or manufactured, and free of toxic materials.

2.03 ORGANIC SOIL AMENDMENTS

A. Compost: Well-composted, stable, and weed-free organic matter, pH range of 5.5 to 8; moisture content 35 to 55 percent by weight; 100 percent passing through 1/2-inch sieve; soluble salt content of less than 2.5 decisiemens/m and less than 1.25 decisiemens/m where seeds, young seedlings, or salt sensitive plants are used; not exceeding 0.5 percent inert contaminants and free of substances toxic to plantings; and as follows:

1. Organic Matter Content: 50 to 60 percent of dry weight.

2. Feedstock: Agricultural, food, or industrial residuals; biosolids; yard trimmings; or source-separated or compostable mixed solid waste.

B. Sphagnum Peat: Partially decomposed sphagnum peat moss, finely divided or granular texture, with a pH range of 3.4 to 4.8.

C. Muck Peat: Partially decomposed moss peat, native peat, or reed-sedge peat, finely divided or of granular texture, with a pH range of 6 to 7.5, and having a water-absorbing capacity of 1100 to 2000 percent.

D. Wood Derivatives: Decomposed, nitrogen-treated sawdust, ground bark, or wood waste; of uniform texture and free of chips, stones, sticks, soil, or toxic materials.

E. Manure: Well-rotted, unleached, stable or cattle manure containing not more than 25 percent by volume of straw, sawdust, or other bedding materials; free of toxic substances, stones, sticks, soil, weed seed, debris, and material harmful to plant growth.

2.04 FERTILIZERS

A. Bonemeal: Commercial, raw or steamed, finely ground; a minimum of 4 percent nitrogen and 20 percent phosphoric acid.

B. Commercial Fertilizer: Commercial-grade complete fertilizer of neutral character, consisting of fast- and slow-release nitrogen, 50 percent derived from natural organic sources of urea formaldehyde, phosphorous, and potassium in the following composition:

1. Composition: Nitrogen, phosphorous, and potassium in amounts recommended in soil reports from a qualified soil-testing laboratory.

C. Slow-Release Fertilizer: Granular or pelleted fertilizer consisting of a minimum of 50 percent water-insoluble nitrogen, phosphorus, and potassium in the following composition:

1. Composition: Nitrogen, phosphorous, and potassium in amounts recommended in soil reports from a qualified soil-testing laboratory.

D. Planting Tablets: Tightly compressed chip type, long-lasting, slow-release, commercial-grade planting fertilizer in tablet form. Tablets shall break down with soil bacteria, converting nutrients into a form that can be absorbed by plant roots.

1. Size: 5-gram for small plants and ground covers, 10-gram for up to 1-gallon size plants, and 21-gram for 1-gallon or greater plants tablets.

2. Nutrient Composition: 20 percent nitrogen, 10 percent phosphorous, and 5 percent potassium, by weight plus micronutrients.

E. Chelated Iron: Commercial-grade FeEDDHA for dicots and woody plants, and commercial-grade FeDTPA for ornamental grasses and monocots.

2.05 PLANTING SOILS

A. Planting Soil: Existing, native surface topsoil formed under natural conditions with the duff layer retained during excavation process and stockpiled on-site. Verify suitability of native surface topsoil to produce viable planting soil. Clean soil of roots, plants, sod, stones, clay lumps, and other extraneous materials harmful to plant growth.

1. Supplement with imported topsoil or manufactured topsoil from off-site sources planting soil when quantities are insufficient.

2. Mix existing, native surface topsoil and/or imported topsoil or manufactured topsoil from off-site sources with the following soil amendments and fertilizers in the following quantities to produce planting soil:

a. Ratio of Loose Compost to Topsoil by Volume: 1:3.

b. Ratio of Loose Peat to Topsoil by Volume: Per topsoil analysis.

c. Ratio of Loose Wood Derivatives to Topsoil by Volume: Per topsoil analysis.

d. Weight of Lime per 1000 Sq. Ft.: Per topsoil analysis.

e. Weight of Sulfur, Iron Sulfate or Aluminum Sulfate per 1000 Sq. Ft.: Per topsoil analysis.

f. Weight of Agricultural Gypsum per 1000 Sq. Ft.: Per topsoil analysis.

g. Volume of Sand Plus 1000 Sq. Ft.: Per topsoil analysis.

h. Weight of Bonemeal per 1000 Sq. Ft.: Per topsoil analysis.

i. Weight of Commercial Fertilizer per 1000 Sq. Ft.: Per manufacturer's recommendations.

j. Weight of Slow-Release Fertilizer per 1000 Sq. Ft.: Per manufacturer's recommendations.

B. Supplemental Planting Soil: Imported topsoil or manufactured topsoil from off-site sources. Obtain topsoil displaced from naturally well-drained construction or mining sites where topsoil occurs at least 4 inches deep; do not obtain from bogs, or marshes.

1. Additional Properties of Imported Topsoil or Manufactured Topsoil: Screened and free of stones ½-inch or larger in any dimension; free of roots, plants, sod, clods, clay lumps, pockets of coarse sand, paint, paint washout, concrete slurry, concrete layers or chunks, cement, plaster, building debris, oils, gasoline, diesel fuel, paint thinner, turpentine, tar, roofing compound, acid, and other extraneous materials harmful to plant growth; free of obnoxious weeds and invasive plants including quackgrass, Johnsongrass, poison ivy,

nutsedge, nimblewill, Canada thistle, bindweed, bentgrass, wild garlic, ground ivy, perennial sorrel, and bromegrass; not infested with nematodes; grubs; or other pests, pest eggs, or other undesirable organisms and disease-causing plant pathogens; friable and with sufficient structure to give good tilth and aeration. Continuous, air-filled pore space content on a volume/volume basis shall be at least 15 percent when moisture is present at field capacity. Soil shall have a field capacity of at least 15 percent on a dry weight basis.

2. Mix imported topsoil or manufactured topsoil with the following soil amendments and fertilizers in the following quantities to produce planting soil:

   a. Ratio of Loose Compost to Topsoil by Volume: 1:3.

   b. Ratio of Loose Peat to Topsoil by Volume: Per topsoil analysis.

   c. Ratio of Loose Wood Derivatives to Topsoil by Volume: Per topsoil analysis.

   d. Weight of Lime per 1000 Sq. Ft.: Per topsoil analysis.

   e. Weight of Sulfur, Iron Sulfate or Aluminum Sulfate per 1000 Sq. Ft.: Per topsoil analysis.

   f. Weight of Agricultural Gypsum per 1000 Sq. Ft.: Per topsoil analysis.

   g. Volume of Sand Plus 1000 Sq. Ft.: Per topsoil analysis.

   h. Weight of Bonemeal per 1000 Sq. Ft.: Per topsoil analysis.

   i. Weight of Commercial Fertilizer per 1000 Sq. Ft.: Per manufacturer's recommendations.

   j. Weight of Slow-Release Fertilizer per 1000 Sq. Ft.: Per manufacturer's recommendations.

2.06 MULCHES

A. Organic Mulch: Free from deleterious materials and suitable as a top dressing of trees and shrubs, consisting of one of the following:

   1. Type: Double shredded hardwood bark mulch, aged two years.

   2. Color: Natural.

B. Compost Mulch: Well-composted, stable, and weed-free organic matter, pH range of 5.5 to 8; moisture content 35 to 55 percent by weight; 100 percent passing through 1/2-inch sieve; soluble salt content of less than 2.5 decisiemens/m and less than 1.25 decisiemens/m where seeds, young seedlings or slat-sensitive plants are used; not exceeding 0.5 percent inert contaminants and free of substances toxic to plantings; and as follows:

   1. Organic Matter Content: 50 to 60 percent of dry weight.

2.07 PESTICIDES

A. General: Pesticide registered and approved by EPA, acceptable to authorities having jurisdiction, and of type recommended by manufacturer for each specific problem and as required for Project conditions and application. Do not use restricted pesticides unless authorized in writing by authorities having jurisdiction.

B. Pre-Emergent Herbicide (Selective and Non-Selective): Effective for controlling the germination or growth of weeds within planted areas at the soil level directly below the mulch layer.

C. Post-Emergent Herbicide (Selective and Non-Selective): Effective for controlling weed growth that has already germinated.

2.08 TREE STABILIZATION MATERIALS

A. Stakes and Guys:

1. Upright and Guy Stakes: Rough-sawn, sound, new hardwood , free of knots, holes, cross grain, and other defects, 2-by-2-inch nominal by length indicated, pointed at one end.

2. Flexible Ties: Wide rubber or elastic bands or straps of length required to reach stakes or turnbuckles.

3. Guys and Tie Wires: ASTM A 641/A 641M, Class 1, galvanized-steel wire, two-strand, twisted, 0.106 inch in diameter.

4. Guy Cables: Five-strand, 3/16-inch- diameter, galvanized-steel cable, with zinc-coated turnbuckles, a minimum of 3 inches long, with two 3/8-inch galvanized eyebolts.

5. Flags: Standard surveyor's plastic flagging tape, white, 6 inches long.

6. Proprietary Staking-and-Guying Devices: Proprietary stake and adjustable tie systems to secure each new planting by plant stem; sized as indicated and per manufacturer's written recommendations.

2.09 MISCELLANEOUS PRODUCTS

A. Wood Pressure-Preservative Treatment: AWPA C2, with waterborne preservative for soil and freshwater use, acceptable to authorities having jurisdiction, and containing no arsenic; including ammoniacal copper arsenate, ammoniacal copper zinc arsenate, and chromated copper arsenate.

B. Antidesiccant: Water-insoluble emulsion, permeable moisture retarder, film forming, for trees and shrubs. Deliver in original, sealed, and fully labeled containers and mix according to manufacturer's written instructions.

C. Burlap: Non-synthetic, biodegradable.

PART 3 EXECUTION

3.01 EXAMINATION

A. Examine areas to receive plants for compliance with requirements and conditions affecting installation and performance.

1. Verify that no foreign or deleterious material or liquid such as paint, paint washout, concrete slurry, concrete layers or chunks, cement, plaster, oils, gasoline, diesel fuel, paint thinner, turpentine, tar, roofing compound, or acid has been deposited in soil within a planting area.

2. Do not mix or place soils and soil amendments in frozen, wet, or muddy conditions.

3. Suspend soil spreading, grading, and tilling operations during periods of excessive soil moisture until the moisture content reaches acceptable levels to attain the required results.

4. Uniformly moisten excessively dry soil that is not workable and which is too dusty.

B. Proceed with installation only after unsatisfactory conditions have been corrected.

C. If contamination by foreign or deleterious material or liquid is present in soil within a planting area, remove the soil and contamination as directed by Landscape Architect/Owner's Representative and replace with new planting soil.

3.02 PREPARATION

A. Protect structures, utilities, sidewalks, pavements, and other facilities and turf areas and existing plants from damage caused by planting operations.

B. Install erosion-control measures to prevent erosion or displacement of soils and discharge of soil-bearing water runoff or airborne dust to adjacent properties and walkways.

C. Lay out individual tree and shrub locations and areas for multiple plantings. Stake locations, outline areas, adjust locations when requested, and obtain Landscape Architect/Owner's Representative acceptance of layout before excavating or planting. Make minor adjustments as required.

D. Trunk Wrapping: Prior to transporting from nursery, inspect tree trunks for injury, improper pruning, and insect infestation; take corrective measures required before wrapping, including denial of tree. Prior to transporting from nursery, wrap trees of 2-inch caliper and larger with white or light-colored trunk-wrap tape. Start at base of trunk and spiral cover trunk to height of first branches. Overlap wrap, exposing half the width, and securely attach with masking tape (not duct or electrical tape or wire ties). During inspection, by Landscape Architect/Owner's Representative, at delivery of trees to the project site, remove trunk wrap from tree. Replace trunk wrap to trees a directed by Landscape Architect/Owner's Representative.

E. Apply antidesiccant to trees and shrubs using power spray to provide an adequate film over trunks (before wrapping), branches, stems, twigs, and foliage to protect during digging, handling, and transportation.

1. If deciduous trees or shrubs are moved in full leaf, spray with antidesiccant at nursery before moving and again two weeks after planting.

F. Wrap trees and shrubs with burlap fabric over trunks, branches, stems, twigs, and foliage to protect from wind and other damage during digging, handling, and transportation.

3.03 PLANTING AREA ESTABLISHMENT

A. Loosen subgrade of planting areas to a minimum depth of 6 inches. Remove stones larger than 1/2 inch in any dimension and sticks, roots, rubbish, and other extraneous matter and legally dispose of them off Owner's property.

1. Apply fertilizer directly to subgrade before loosening.

2. Thoroughly blend planting soil off-site before spreading or spread topsoil, apply soil amendments and fertilizer on surface, and thoroughly blend planting soil.

a. Delay mixing fertilizer with planting soil if planting will not proceed within a few days.

b. Mix lime with dry soil before mixing fertilizer.

3. Spread planting soil to a depth of 12 inches but not less than required to meet finish grades after natural settlement. Do not spread if planting soil or subgrade is frozen, muddy, or excessively wet.

a. Spread approximately one-half the thickness of planting soil over loosened subgrade. Mix thoroughly into top 4 inches of subgrade. Spread remainder of planting soil.

B. Finish Grading: Grade planting areas to a smooth, uniform surface plane with loose, uniformly fine texture. Roll and rake, remove ridges, and fill depressions to meet finish grades.

C. Before planting, obtain Landscape Architect/Owner's Representative acceptance of finish grading; restore planting areas if eroded or otherwise disturbed after finish grading.

3.04 EXCAVATION FOR TREES AND SHRUBS

A. Planting Pits and Trenches: Excavate circular planting pits with sides sloping inward at a 60-degree angle. Excavations with vertical sides are not acceptable. Trim perimeter of bottom leaving center area of bottom raised slightly to support root ball and assist in drainage away from center. Do not further disturb base. Ensure that root ball will sit on undisturbed base soil to prevent settling. Scarify sides of planting pit smeared or smoothed during excavation.

1. Excavate approximately twice times as wide as ball diameter for balled and burlapped and container-grown stock.
2. Do not excavate deeper than depth of the root ball, measured from the root flare to the bottom of the root ball.
3. If area under the plant was initially dug too deep, add soil to raise it to the correct level and thoroughly tamp the added soil to prevent settling.
4. Maintain required angles of repose of adjacent materials. Do not excavate subgrades of adjacent paving, structures, hardscapes, or other new or existing improvements.
5. Maintain supervision of excavations during working hours.
6. Keep excavations covered or otherwise protected when unattended by Installer's personnel.
7. If drain tile is shown on Drawings or required under planting areas, excavate to top of porous backfill over tile.

B. Subsoil and topsoil removed from excavations may be used as planting soil if amended per planting soil portion of this section.

C. Obstructions: Notify Architect if unexpected rock or obstructions detrimental to trees or shrubs are encountered in excavations.

1. Hardpan Layer: Drill 6-inch- diameter holes, 24 inches apart, into free-draining strata or to a depth of 10 feet, whichever is less, and backfill with free-draining material.

D. Prior to planting of tree, notify Landscape Architect/Owner's Representative if subsoil conditions evidence unexpected water seepage or retention in tree or shrub planting pits. Do not plant tree in pit until drainage condition is corrected and given approval by Landscape Architect/Owner's Representative.

E. Fill excavations with water and allow to percolate away before positioning trees and shrubs.

3.05 TREE, SHRUB, AND VINE PLANTING

A. Before planting, verify that root flare is visible at top of root ball according to ANSI Z60.1. If root flare is not visible, remove soil in a level manner from the root ball to where the top-most root emerges from the trunk. After soil removal to expose the root flare, verify that root ball still meets size requirements.

B. Remove stem girdling roots and kinked roots. Remove injured roots by cutting cleanly; do not break.

C. Set balled and burlapped stock plumb and in center of planting pit or trench with root flare 2 inches above adjacent finish grades.

1. Use planting soil for backfill.
2. After placing some backfill around root ball to stabilize plant, carefully cut and remove burlap, rope, and wire baskets from tops of root balls and from sides, but do not remove from under root balls. Remove pallets, if any, before setting. Do not use planting stock if root ball is cracked or broken before or during planting operation.
3. Backfill around root ball in layers, tamping to settle soil and eliminate voids and air pockets. When planting pit is approximately one-half filled, water thoroughly before placing remainder of backfill. Repeat watering until no more water is absorbed.
4. Place planting tablets in each planting pit when pit is approximately one-half filled; in amounts recommended in soil reports from soil-testing laboratory. Place tablets beside the root ball about 1 inch from root tips; do not place tablets in bottom of the hole.
5. Continue backfilling process. Water again after placing and tamping final layer of soil.

D. Set container-grown stock plumb and in center of planting pit or trench with root flare 2 inches above adjacent finish grades.

1. Use planting soil for backfill.

2. Carefully remove root ball from container without damaging root ball or plant.

3. Backfill around root ball in layers, tamping to settle soil and eliminate voids and air pockets. When planting pit is approximately one-half filled, water thoroughly before placing remainder of backfill. Repeat watering until no more water is absorbed.

4. Place planting tablets in each planting pit when pit is approximately one-half filled; in amounts recommended in soil reports from soil-testing laboratory. Place tablets beside the root ball about 1 inch from root tips; do not place tablets in bottom of the hole.

5. Continue backfilling process. Water again after placing and tamping final layer of soil.

E. When planting on slopes, set the plant so the root flare on the uphill side is flush with the surrounding soil on the slope; the edge of the root ball on the downhill side will be above the surrounding soil. Apply enough soil to cover the downhill side of the root ball.

3.06 MECHANIZED TREE SPADE PLANTING

A. Trees may be planted with an approved mechanized tree spade at the designated locations. Do not use tree spade to move trees larger than the maximum size allowed for a similar field-grown, balled-and-burlapped root-ball diameter according to ANSI Z60.1, or larger than the manufacturer's maximum size recommendation for the tree spade being used, whichever is smaller.

B. When extracting the tree, center the trunk within the tree spade and move tree with a solid ball of earth.

C. Cut exposed roots cleanly during transplanting operations.

D. Use the same tree spade to excavate the planting hole as was used to extract and transport the tree.

E. Plant trees as shown on Drawings, following procedures in "Tree, Shrub, and Vine Planting" Article.

F. Where possible, orient the tree in the same direction as in its original location.

3.07 TREE, SHRUB, AND VINE PRUNING

A. Remove only dead, dying, or broken branches. Do not prune for shape.

B. Prune, thin, and shape trees, shrubs, and vines as directed by Landscape Architect/Owner's Representative.

C. Prune, thin, and shape trees, shrubs, and vines according to standard professional horticultural and arboricultural practices. Unless otherwise indicated by Landscape Architect/Owner's Representative, do not cut tree leaders; remove only injured, dying, or dead branches from trees and shrubs; and prune to retain natural character.

D. Do not apply pruning paint to wounds.

3.08 TREE STABILIZATION

A. Install trunk stabilization as follows unless otherwise indicated:

1. Upright Staking and Tying: Stake trees of 2- through 5-inch caliper. Stake trees of less than 2-inch caliper only as required or as directed by Landscape Architect/Owner's Representative to prevent wind tip out. Use a minimum of two stakes of length required to penetrate at least 18 inches below bottom of backfilled excavation and to extend one-third of trunk height above grade. Set vertical stakes and space to avoid penetrating root balls or root masses.

2. Use two stakes for trees up to 12 feet high and 2-1/2 inches or less in caliper; three stakes for trees less than 14 feet high and up to 4 inches in caliper. Space stakes equally around trees.

3. Support trees with bands of flexible ties at contact points with tree trunk. Allow enough slack to avoid rigid restraint of tree.

4. Support trees with two strands of tie wire, connected to the brass grommets of tree-tie webbing at contact points with tree trunk. Allow enough slack to avoid rigid restraint of tree.

B. Staking and Guying: Stake and guy trees more than 14 feet in height and more than 3 inches in caliper unless otherwise indicated. Securely attach no fewer than three guys to stakes 30 inches long, driven to grade.

1. Site-Fabricated Staking-and-Guying Method:

a. For trees more than 6 inches in caliper, anchor guys to wood deadmen buried at least 36 inches below grade. Provide turnbuckle for each guy wire and tighten securely.

b. Support trees with bands of flexible ties at contact points with tree trunk and reaching to turnbuckle. Allow enough slack to avoid rigid restraint of tree.

c. Support trees with strands of cable or multiple strands of tie wire, connected to the brass grommets of tree-tie webbing at contact points with tree trunk and reaching to turnbuckle. Allow enough slack to avoid rigid restraint of tree.

d. Attach flags to each guy wire, 30 inches above finish grade.

e. Paint turnbuckles with luminescent white paint.

2. Proprietary Staking and Guying Device: Install staking and guying system sized and positioned as recommended by manufacturer unless otherwise indicated and according to manufacturer's written instructions.

3.09 ROOT-BARRIER INSTALLATION

A. Install root barrier where trees are planted within 60 inches of paving or other hardscape elements, such as walls, curbs, and walkways unless otherwise shown on Drawings.

B. Align root barrier vertically and run it linearly along and adjacent to the paving or other hardscape elements to be protected from invasive roots.

C. Install root barrier continuously for a distance of 60 inches in each direction from the tree trunk, for a total distance of 10 feet per tree. If trees are spaced closer, use a single continuous piece of root barrier.

1. Position top of root barrier per manufacturer's recommendations.

2. Overlap root barrier a minimum of 12 inches at joints.

3. Do not distort or bend root barrier during construction activities.

4. Do not install root barrier surrounding the root ball of tree.

3.10 GROUND COVER AND PLANT PLANTING

A. Set out and space ground cover and plants other than trees, shrubs, and vines in even rows with triangular spacing.

B. Use planting soil for backfill.

C. Dig holes large enough to allow spreading of roots.

D. For rooted cutting plants supplied in flats, plant each in a manner that will minimally disturb the root system but to a depth not less than two nodes.

E. Work soil around roots to eliminate air pockets and leave a slight saucer indentation around plants to hold water.

F. Water thoroughly after planting, taking care not to cover plant crowns with wet soil.

G. Protect plants from hot sun and wind; remove protection if plants show evidence of recovery from transplanting shock.

3.11 PLANTING AREA MULCHING

A. Mulch backfilled surfaces of planting areas and other areas indicated.

1. Trees and Tree-like Shrubs in Turf Areas: Apply organic mulch ring of 3-inch thickness, as shown on drawings. Do not place mulch against trunks or stems.

2. Organic Mulch in Planting Areas: Apply 3-inch average thickness of organic mulch over whole surface of planting area, and finish level with adjacent finish grades. Do not place mulch against trunks or stems.

3.12 PLANT MAINTENANCE

A. Maintain plantings by pruning, cultivating, watering, weeding, fertilizing, mulching, restoring planting saucers, adjusting and repairing tree-stabilization devices, resetting to proper grades or vertical position, and performing other operations as required to establish healthy, viable plantings. Spray or treat as required to keep trees and shrubs free of insects and disease.

B. Fill in as necessary soil subsidence that may occur because of settling or other processes. Replace mulch materials damaged or lost in areas of subsidence.

C. Apply treatments as required to keep plant materials, planted areas, and soils free of pests and pathogens or disease. Use integrated past management practices whenever possible to minimize the use of pesticides and reduce hazards. Treatments include physical controls such as hosing off foliage, mechanical controls such as traps, and biological control agents.

3.13 PESTICIDE APPLICATION

A. Apply pesticides and other chemical products and biological control agents in accordance with authorities having jurisdiction and manufacturer's written recommendations. Coordinate applications with Owner's operations and others in proximity to the Work. Notify Owner before each application is performed.

B. Pre-Emergent Herbicides (Selective and Non-Selective): Apply to tree, shrub, and ground-cover areas in accordance with manufacturer's written recommendations. Do not apply to seeded areas.

C. Post-Emergent Herbicides (Selective and Non-Selective): Apply only as necessary to treat already-germinated weeds and in accordance with manufacturer's written recommendations.

3.14 CLEANUP AND PROTECTION

A. During planting, keep adjacent paving and construction clean and work area in an orderly condition.

B. Protect plants from damage due to landscape operations and operations of other contractors and trades. Maintain protection during installation and maintenance periods. Treat, repair, or replace damaged plantings.

C. After installation and before Substantial Completion, remove nursery tags, nursery stakes, tie tape, labels, wire, burlap, and other debris from plant material, planting areas, and Project site.

3.15 DISPOSAL

A. Remove surplus soil and waste material including excess subsoil, unsuitable soil, trash, and debris and legally dispose of them off Owner's property.

END OF SECTION 32 93 00

SECTION 33 05 00

COMMON WORK RESULTS FOR UTILITIES

PART 1 GENERAL

1.01 RELATED DOCUMENTS

A. Drawings and general provisions of the Contract, including General and Supplementary Conditions and Division 01 Specification Sections, apply to this Section.

1.02 SUMMARY

A. This Section includes the following:

1. Piping joining materials.
2. Transition fittings.
3. Dielectric fittings.
4. Sleeves.
5. Grout.
6. Flowable fill.
7. Piped utility demolition.
8. Piping system common requirements.
9. Painting.
10. Concrete bases.
11. Metal supports and anchorages.

1.03 DEFINITIONS

A. Exposed Installations: Exposed to view outdoors or subject to outdoor ambient temperatures and weather conditions.

B. Concealed Installations: Concealed from view and protected from weather conditions and physical contact by building occupants but subject to outdoor ambient temperatures. Examples include installations within unheated shelters.

C. ABS: Acrylonitrile-butadiene-styrene plastic.

D. CPVC: Chlorinated polyvinyl chloride plastic.

E. PE: Polyethylene plastic.

F. PVC: Polyvinyl chloride plastic.

1.04 SUBMITTALS

A. Product Data: For the following:

1. Dielectric fittings.
2. Identification devices.

B. Welding certificates.

1.05 QUALITY ASSURANCE

A. Steel Support Welding: Qualify procedures and personnel according to AWS D1.1/D1.1M, "Structural Welding Code - Steel."

B. Steel Piping Welding: Qualify processes and operators according to ASME Boiler and Pressure Vessel Code: Section IX, "Welding and Brazing Qualifications."

1. Comply with provisions in ASME B31 Series, "Code for Pressure Piping."
2. Certify that each welder has passed AWS qualification tests for welding processes involved and that certification is current.

C. Comply with ASME A13.1 for lettering size, length of color field, colors, and viewing angles of identification devices.

1.06 DELIVERY, STORAGE, AND HANDLING

A. Deliver pipes and tubes with factory-applied end caps. Maintain end caps through shipping, storage, and handling to prevent pipe end damage and to prevent entrance of dirt, debris, and moisture.

B. Store plastic pipes protected from direct sunlight. Support to prevent sagging and bending.

1.07 COORDINATION

A. Coordinate installation of required supporting devices and set sleeves in poured-in-place concrete and other structural components as they are constructed.

B. Coordinate installation of identifying devices after completing covering and painting if devices are applied to surfaces.

C. Coordinate size and location of concrete bases. Formwork, reinforcement, and concrete requirements are specified in Division 03.

PART 2 PRODUCTS

2.01 PIPING JOINING MATERIALS

A. Pipe-Flange Gasket Materials: Suitable for chemical and thermal conditions of piping system contents.

1. ASME B16.21, non-metallic, flat, asbestos free, 1/8-inch maximum thickness, unless otherwise indicated.

a. Full-Face Type: For flat-face, Class 125, cast-iron and cast-bronze flanges.

b. Narrow-Face Type: For raised-face, Class 250, cast-iron and steel flanges.

2. AWWA C110, rubber, flat face, 1/8 inch thick, unless otherwise indicated; and full-face or ring type, unless otherwise indicated.

B. Flange Bolts and Nuts: ASME B18.2.1, carbon steel, unless otherwise indicated.

C. Plastic, Pipe-Flange Gasket, Bolts, and Nuts: Type and material recommended by piping system manufacturer, unless otherwise indicated.

D. Solder Filler Metals: ASTM B 32, lead-free alloys. Include water-flushable flux according to ASTM B 813.

E. Brazing Filler Metals: AWS A5.8, BCuP Series, copper-phosphorus alloys for general-duty brazing, unless otherwise indicated; and AWS A5.8, BAg1, silver alloy for refrigerant piping, unless otherwise indicated.

F. Welding Filler Metals: Comply with AWS D10.12/D10.12M for welding materials appropriate for wall thickness and chemical analysis of steel pipe being welded.

G. Solvent Cements for Joining Plastic Piping:

1. ABS Piping: ASTM D 2235.

2. CPVC Piping: ASTM F 493.

3. PVC Piping: ASTM D 2564. Include primer according to ASTM F 656.

4. PVC to ABS Piping Transition: ASTM D 3138.

H. Fiberglass Pipe Adhesive: As furnished or recommended by pipe manufacturer.

2.02 TRANSITION FITTINGS

A. Transition Fittings, General: Same size as, and with pressure rating at least equal to and with ends compatible with, piping to be joined.

B. Transition Couplings NPS 1-1/2 and Smaller:

1. Underground Piping: Manufactured piping coupling or specified piping system fitting.

2. Aboveground Piping: Specified piping system fitting.

C. AWWA Transition Couplings NPS 2 and Larger:

1. Description: AWWA C219, metal sleeve-type coupling for underground pressure piping.

D. Plastic-to-Metal Transition Fittings:

1. Description: CPVC and PVC one-piece fitting with manufacturer's Schedule 80 equivalent dimensions; one end with threaded brass insert, and one solvent-cement-joint or threaded end.

E. Plastic-to-Metal Transition Unions:

1. Description: MSS SP-107, CPVC and PVC four-part union. Include brass or stainless-steel threaded end, solvent-cement-joint or threaded plastic end, rubber O-ring, and union nut.

F. Flexible Transition Couplings for Underground Non-pressure Drainage Piping:

1. Description: ASTM C 1173 with elastomeric sleeve ends same size as piping to be joined, and corrosion-resistant metal band on each end.

2.03 DIELECTRIC FITTINGS

A. Dielectric Fittings, General: Assembly of copper alloy and ferrous materials or ferrous material body with separating nonconductive insulating material suitable for system fluid, pressure, and temperature.

B. Dielectric Unions:

1. Description: Factory fabricated, union, NPS 2 and smaller.

a. Pressure Rating: 150 psig minimum at 180 deg F.

b. End Connections: Solder-joint copper alloy and threaded ferrous; threaded ferrous.

C. Dielectric Flanges:

1. Description: Factory-fabricated, bolted, companion-flange assembly, NPS 2-1/2 to NPS 4 and larger.

a. Pressure Rating: 150 psig minimum.

b. End Connections: Solder-joint copper alloy and threaded ferrous; threaded solder-joint copper alloy and threaded ferrous.

D. Dielectric-Flange Kits:

1. Description: Non-conducting materials for field assembly of companion flanges, NPS 2-1/2 and larger.

a. Pressure Rating: 150 psig minimum.

b. Gasket: Neoprene or phenolic.

c. Bolt Sleeves: Phenolic or polyethylene.

d. Washers: Phenolic with steel backing washers.

E. Dielectric Couplings:

1. Description: Galvanized-steel coupling with inert and noncorrosive, thermoplastic lining, NPS 3 and smaller.

a. Pressure Rating: 300 psig at 225 deg F.

b. End Connections: Threaded.

F. Dielectric Nipples:

1. Description: Electroplated steel nipple with inert and noncorrosive, thermoplastic lining.

a. Pressure Rating: 300 psig at 225 deg F.

b. End Connections: Threaded or grooved.

2.04 SLEEVES

A. Mechanical sleeve seals for pipe penetrations are specified in Division 22 Section "Common Work Results for Plumbing."

B. Galvanized-Steel Sheet Sleeves: 0.0239-inch minimum thickness; round tube closed with welded longitudinal joint.

C. Steel Pipe Sleeves: ASTM A 53/A 53M, Type E, Grade B, Schedule 40, galvanized, plain ends.

D. Cast-Iron Sleeves: Cast or fabricated "wall pipe" equivalent to ductile-iron pressure pipe, with plain ends and integral waterstop, unless otherwise indicated.

E. Molded PVC Sleeves: Permanent, with nailing flange for attaching to wooden forms.

F. PVC Pipe Sleeves: ASTM D 1785, Schedule 40.

G. Molded PE Sleeves: Reusable, PE, tapered-cup shaped, and smooth outer surface with nailing flange for attaching to wooden forms.

2.05 GROUT

A. Description: ASTM C 1107, Grade B, non-shrink and non-metallic, dry hydraulic-cement grout.

1. Characteristics: Post hardening, volume adjusting, non-staining, non-corrosive, non-gaseous, and recommended for interior and exterior applications.
2. Design Mix: 5000-psi, 28-day compressive strength.
3. Packaging: Premixed and factory packaged.

2.06 FLOWABLE FILL

A. Description: Low-strength-concrete, flowable-slurry mix.

1. Cement: ASTM C 150, Type I, portland.
2. Density: 115- to 145-lb/cu. ft.
3. Aggregates: ASTM C 33, natural sand, fine and crushed gravel or stone, coarse.
4. Aggregates: ASTM C 33, natural sand, fine.
5. Admixture: ASTM C 618, fly-ash mineral.
6. Water: Comply with ASTM C 94/C 94M.
7. Strength: 100 to 200 psig at 28 days.

PART 3 EXECUTION

3.01 PIPED UTILITY DEMOLITION

A. Refer to Division 01 Section "Cutting and Patching" and Division 02 Section "Selective Structure Demolition" for general demolition requirements and procedures.

B. Disconnect, demolish, and remove piped utility systems, equipment, and components indicated to be removed.

1. Piping to Be Removed: Remove portion of piping indicated to be removed and cap or plug remaining piping with same or compatible piping material.
2. Piping to Be Abandoned in Place: Drain piping. Fill abandoned piping with flowable fill, and cap or plug piping with same or compatible piping material.
3. Equipment to Be Removed: Disconnect and cap services and remove equipment.
4. Equipment to Be Removed and Reinstalled: Disconnect and cap services and remove, clean, and store equipment; when appropriate, reinstall, reconnect, and make operational.
5. Equipment to Be Removed and Salvaged: Disconnect and cap services and remove equipment and deliver to Owner.

C. If pipe, insulation, or equipment to remain is damaged in appearance or is unserviceable, remove damaged or unserviceable portions and replace with new products of equal capacity and quality.

3.02 DIELECTRIC FITTING APPLICATIONS

A. Dry Piping Systems: Connect piping of dissimilar metals with the following:

1. NPS 2 and Smaller: Dielectric unions.
2. NPS 2-1/2 to NPS 12: Dielectric flanges or dielectric flange kits.

B. Wet Piping Systems: Connect piping of dissimilar metals with the following:

1. NPS 2 and Smaller: Dielectric couplings or dielectric nipples.

2. NPS 2-1/2 to NPS 4: Dielectric nipples.
3. NPS 2-1/2 to NPS 8: Dielectric nipples or dielectric flange kits.
4. NPS 10 and NPS 12: Dielectric flange kits.

3.03 PIPING INSTALLATION

A. Install piping according to the following requirements and Division 33 Sections specifying piping systems.

B. Drawing plans, schematics, and diagrams indicate general location and arrangement of piping systems. Indicated locations and arrangements were used to size pipe and calculate friction loss, expansion, pump sizing, and other design considerations. Install piping as indicated unless deviations to layout are approved on the Coordination Drawings.

C. Install piping indicated to be exposed and piping in equipment rooms and service areas at right angles or parallel to building walls. Diagonal runs are prohibited unless specifically indicated otherwise.

D. Install piping to permit valve servicing.

E. Install piping at indicated slopes.

F. Install piping free of sags and bends.

G. Install fittings for changes in direction and branch connections.

H. Select system components with pressure rating equal to or greater than system operating pressure.

I. Sleeves are not required for core-drilled holes.

J. Permanent sleeves are not required for holes formed by removable PE sleeves.

K. Install sleeves for pipes passing through concrete and masonry walls and concrete floor and roof slabs.

1. Cut sleeves to length for mounting flush with both surfaces.
   a. Exception: Extend sleeves installed in floors of equipment areas or other wet areas 2 inches above finished floor level.
2. Install sleeves in new walls and slabs as new walls and slabs are constructed.
   a. Steel Pipe Sleeves: For pipes smaller than NPS 6.
   b. Steel Sheet Sleeves: For pipes NPS 6 and larger, penetrating gypsum-board partitions.

L. Verify final equipment locations for roughing-in.

M. Refer to equipment specifications in other Sections for roughing-in requirements.

3.04 PIPING JOINT CONSTRUCTION

A. Join pipe and fittings according to the following requirements and Division 33 Sections specifying piping systems.

B. Ream ends of pipes and tubes and remove burrs. Bevel plain ends of steel pipe.

C. Remove scale, slag, dirt, and debris from inside and outside of pipe and fittings before assembly.

D. Threaded Joints: Thread pipe with tapered pipe threads according to ASME B1.20.1. Cut threads full and clean using sharp dies. Ream threaded pipe ends to remove burrs and restore full ID. Join pipe fittings and valves as follows:

1. Apply appropriate tape or thread compound to external pipe threads unless dry seal threading is specified.
2. Damaged Threads: Do not use pipe or pipe fittings with threads that are corroded or damaged. Do not use pipe sections that have cracked or open welds.

E. Welded Joints: Construct joints according to AWS D10.12/D10.12M, using qualified processes and welding operators according to Part 1 "Quality Assurance" Article.

F. Flanged Joints: Select appropriate gasket material, size, type, and thickness for service application. Install gasket concentrically positioned. Use suitable lubricants on bolt threads.

G. Grooved Joints: Assemble joints with grooved-end pipe coupling with coupling housing, gasket, lubricant, and bolts according to coupling and fitting manufacturer's written instructions.

H. Soldered Joints: Apply ASTM B 813 water-flushable flux, unless otherwise indicated, to tube end. Construct joints according to ASTM B 828 or CDA's "Copper Tube Handbook," using lead-free solder alloy (0.20 percent maximum lead content) complying with ASTM B 32.

I. Brazed Joints: Construct joints according to AWS's "Brazing Handbook," "Pipe and Tube" Chapter, using copper-phosphorus brazing filler metal complying with AWS A5.8.

J. Pressure-Sealed Joints: Assemble joints for plain-end copper tube and mechanical pressure seal fitting with proprietary crimping tool to according to fitting manufacturer's written instructions.

K. Plastic Piping Solvent-Cemented Joints: Clean and dry joining surfaces. Join pipe and fittings according to the following:

1. Comply with ASTM F 402 for safe-handling practice of cleaners, primers, and solvent cements.
2. ABS Piping: Join according to ASTM D 2235 and ASTM D 2661 appendixes.
3. CPVC Piping: Join according to ASTM D 2846/D 2846M Appendix.
4. PVC Pressure Piping: Join schedule number ASTM D 1785, PVC pipe and PVC socket fittings according to ASTM D 2672. Join other-than-schedule-number PVC pipe and socket fittings according to ASTM D 2855.
5. PVC Nonpressure Piping: Join according to ASTM D 2855.
6. PVC to ABS Nonpressure Transition Fittings: Join according to ASTM D 3138 Appendix.

L. Plastic Pressure Piping Gasketed Joints: Join according to ASTM D 3139.

M. Plastic Non-pressure Piping Gasketed Joints: Join according to ASTM D 3212.

N. Plastic Piping Heat-Fusion Joints: Clean and dry joining surfaces by wiping with clean cloth or paper towels. Join according to ASTM D 2657.

1. Plain-End PE Pipe and Fittings: Use butt fusion.
2. Plain-End PE Pipe and Socket Fittings: Use socket fusion.

O. Bonded Joints: Prepare pipe ends and fittings, apply adhesive, and join according to pipe manufacturer's written instructions.

3.05 PIPING CONNECTIONS

A. Make connections according to the following, unless otherwise indicated:

1. Install unions, in piping NPS 2 and smaller, adjacent to each valve and at final connection to each piece of equipment.
2. Install flanges, in piping NPS 2-1/2 and larger, adjacent to flanged valves and at final connection to each piece of equipment.
3. Install dielectric fittings at connections of dissimilar metal pipes.

3.06 PAINTING

A. Painting of piped utility systems, equipment, and components is specified in Division 09 painting Sections.

B. Damage and Touchup: Repair marred and damaged factory-painted finishes with materials and procedures to match original factory finish.

3.07 CONCRETE BASES

A. Concrete Bases: Anchor equipment to concrete base according to equipment manufacturer's written instructions and according to seismic codes at Project.

1. Construct concrete bases of dimensions indicated, but not less than 4 inches larger in both directions than supported unit.

2. Install dowel rods to connect concrete base to concrete floor. Unless otherwise indicated, install dowel rods on 18-inch centers around the full perimeter of base.
3. Place and secure anchorage devices. Use supported equipment manufacturer's setting drawings, templates, diagrams, instructions, and directions furnished with items to be embedded.
4. Install anchor bolts to elevations required for proper attachment to supported equipment.
5. Install anchor bolts according to anchor-bolt manufacturer's written instructions.
6. Use 3000-psi, 28-day compressive-strength concrete and reinforcement as specified in Division 03 Section "Cast-in-Place Concrete"

3.08 ERECTION OF METAL SUPPORTS AND ANCHORAGES

A. Refer to Division 05 Section "Metal Fabrications" for structural steel.
B. Cut, fit, and place miscellaneous metal supports accurately in location, alignment, and elevation to support and anchor piped utility materials and equipment.

3.09 GROUTING

A. Mix and install grout for equipment base bearing surfaces, pump and other equipment base plates, and anchors.
B. Clean surfaces that will come into contact with grout.
C. Provide forms as required for placement of grout.
D. Avoid air entrapment during placement of grout.
E. Place grout, completely filling equipment bases.
F. Place grout on concrete bases and provide smooth bearing surface for equipment.
G. Place grout around anchors.
H. Cure placed grout.

END OF SECTION 33 05 00

SECTION 33 10 00

FACILITY WATER DISTRIBUTION PIPING

PART 1 GENERAL

1.01 RELATED DOCUMENTS

A. Drawings and general provisions of the Contract, including General and Supplementary Conditions and Division 01 Specification Sections, apply to this Section.

1.02 SUMMARY

A. This Section includes water-distribution piping and related components outside the building for combined water service and fire-service mains.

B. Utility-furnished products include water meters that will be furnished to the site, ready for installation.

1.03 DEFINITIONS

A. EPDM: Ethylene propylene diene terpolymer rubber.

B. LLDPE: Linear, low-density polyethylene plastic.

C. PA: Polyamide (nylon) plastic.

D. PE: Polyethylene plastic.

E. PP: Polypropylene plastic.

F. PVC: Polyvinyl chloride plastic.

1.04 SUBMITTALS

A. Product Data: For each type of product indicated.

B. Shop Drawings: Detail precast concrete vault assemblies and indicate dimensions, method of field assembly, and components.

1. Wiring Diagrams: Power, signal, and control wiring for alarms.

C. Coordination Drawings: For piping and specialties including relation to other services in same area, drawn to scale. Show piping and specialty sizes and valves, meter and specialty locations, and elevations.

D. Field quality-control test reports.

E. Operation and Maintenance Data: For water valves and specialties to include in emergency, operation, and maintenance manuals.

1.05 QUALITY ASSURANCE

A. Regulatory Requirements:

1. Comply with requirements of utility company supplying water. Include tapping of water mains and backflow prevention.

2. Comply with standards of authorities having jurisdiction for potable-water-service piping, including materials, installation, testing, and disinfection.

3. Comply with standards of authorities having jurisdiction for fire-suppression water-service piping, including materials, hose threads, installation, and testing.

B. Piping materials shall bear label, stamp, or other markings of specified testing agency.

C. Electrical Components, Devices, and Accessories: Listed and labeled as defined in NFPA 70, Article 100, by a testing agency acceptable to authorities having jurisdiction, and marked for intended use.

D. Comply with ASTM F 645 for selection, design, and installation of thermoplastic water piping.

E. Comply with FMG's "Approval Guide" or UL's "Fire Protection Equipment Directory" for fire-service-main products.

F. NFPA Compliance: Comply with NFPA 24 for materials, installations, tests, flushing, and valve and hydrant supervision for fire-service-main piping for fire suppression.

G. NSF Compliance:
   1. Comply with NSF 14 for plastic potable-water-service piping. Include marking "NSF-pw" on piping.
   2. Comply with NSF 61 for materials for water-service piping and specialties for domestic water.

1.06 DELIVERY, STORAGE, AND HANDLING

A. Preparation for Transport: Prepare valves, including fire hydrants, according to the following:
   1. Ensure that valves are dry and internally protected against rust and corrosion.
   2. Protect valves against damage to threaded ends and flange faces.
   3. Set valves in best position for handling. Set valves closed to prevent rattling.

B. During Storage: Use precautions for valves, including fire hydrants, according to the following:
   1. Do not remove end protectors unless necessary for inspection; then reinstall for storage.
   2. Protect from weather. Store indoors and maintain temperature higher than ambient dew-point temperature. Support off the ground or pavement in watertight enclosures when outdoor storage is necessary.

C. Handling: Use sling to handle valves and fire hydrants if size requires handling by crane or lift. Rig valves to avoid damage to exposed parts. Do not use handwheels or stems as lifting or rigging points.

D. Deliver piping with factory-applied end caps. Maintain end caps through shipping, storage, and handling to prevent pipe-end damage and to prevent entrance of dirt, debris, and moisture.

E. Protect stored piping from moisture and dirt. Elevate above grade. Do not exceed structural capacity of floor when storing inside.

F. Protect flanges, fittings, and specialties from moisture and dirt.

G. Store plastic piping protected from direct sunlight. Support to prevent sagging and bending.

1.07 PROJECT CONDITIONS

A. Interruption of Existing Water-Distribution Service: Do not interrupt service to facilities occupied by Owner or others unless permitted under the following conditions and then only after arranging to provide temporary water-distribution service according to requirements indicated:
   1. Notify Owner no fewer than two days in advance of proposed interruption of service.
   2. Do not proceed with interruption of water-distribution service without Owner's written permission.

1.08 COORDINATION

A. Coordinate connection to water main with utility company.

PART 2 PRODUCTS

2.01 COPPER TUBE AND FITTINGS

A. Soft Copper Tube: ASTM B 88, Type K and ASTM B 88, Type L, water tube, annealed temper.
   1. Copper, Solder-Joint Fittings: ASME B16.18, cast-copper-alloy or ASME B16.22, wrought-copper, solder-joint pressure type. Furnish only wrought-copper fittings if indicated.
   2. Copper, Pressure-Seal Fittings:
      a. NPS 2 and Smaller: Wrought-copper fitting with EPDM O-ring seal in each end.
      b. NPS 2-1/2 to NPS 4: Bronze fitting with stainless-steel grip ring and EPDM O-ring seal in each end.

B. Hard Copper Tube: ASTM B 88, Type K and ASTM B 88, Type L, water tube, drawn temper.

1. Copper, Solder-Joint Fittings: ASME B16.18, cast-copper-alloy or ASME B16.22, wrought-copper, solder-joint pressure type. Furnish only wrought-copper fittings if indicated.
2. Copper, Pressure-Seal Fittings:
   a. NPS 2 and Smaller: Wrought-copper fitting with EPDM O-ring seal in each end.
   b. NPS 2-1/2 to NPS 4: Bronze fitting with stainless-steel grip ring and EPDM O-ring seal in each end.

C. Bronze Flanges: ASME B16.24, Class 150, with solder-joint end. Furnish Class 300 flanges if required to match piping.

D. Copper Unions: MSS SP-123, cast-copper-alloy, hexagonal-stock body with ball-and-socket, metal-to-metal seating surfaces, and solder-joint or threaded ends.

2.02 DUCTILE-IRON PIPE AND FITTINGS

A. Mechanical-Joint, Ductile-Iron Pipe: AWWA C151, with mechanical-joint bell and plain spigot end unless grooved or flanged ends are indicated.
1. Mechanical-Joint, Ductile-Iron Fittings: AWWA C110, ductile- or gray-iron standard pattern or AWWA C153, ductile-iron compact pattern.
2. Glands, Gaskets, and Bolts: AWWA C111, ductile- or gray-iron glands, rubber gaskets, and steel bolts.

B. Push-on-Joint, Ductile-Iron Pipe: AWWA C151, with push-on-joint bell and plain spigot end unless grooved or flanged ends are indicated.
1. Push-on-Joint, Ductile-Iron Fittings: AWWA C110, ductile- or gray-iron standard pattern or AWWA C153, ductile-iron compact pattern.
2. Gaskets: AWWA C111, rubber.

C. Grooved-Joint, Ductile-Iron Pipe: AWWA C151, with cut, rounded-grooved ends.
1. Grooved-End, Ductile-Iron Pipe Appurtenances:
   a. Grooved-End, Ductile-Iron Fittings: ASTM A 47/A 47M, malleable-iron castings or ASTM A 536, ductile-iron castings with dimensions matching pipe.
   b. Grooved-End, Ductile-Iron-Piping Couplings: AWWA C606, for ductile-iron-pipe dimensions. Include ferrous housing sections, gasket suitable for water, and bolts and nuts.

D. Flanges: ASME 16.1, Class 125, cast iron.

2.03 PE PIPE AND FITTINGS

A. PE, AWWA Pipe: AWWA C906, DR No. 7.3, 9, or 9.3; with PE compound number required to give pressure rating not less than 160 psig.
1. PE, AWWA Fittings: AWWA C906, socket- or butt-fusion type, with DR number matching pipe and PE compound number required to give pressure rating not less than 160 psig.

B. PE, Fire-Service Pipe: ASTM F 714, AWWA C906, or equivalent for PE water pipe; FMG approved, with minimum thickness equivalent to FMG Class 150 and Class 200.
1. Molded PE Fittings: ASTM D 3350, PE resin, socket- or butt-fusion type, made to match PE pipe dimensions and class.

2.04 PVC PIPE AND FITTINGS

A. PVC, Schedule 40 Pipe: ASTM D 1785.
1. PVC, Schedule 40 Socket Fittings: ASTM D 2466.

B. PVC, Schedule 80 Pipe: ASTM D 1785.
1. PVC, Schedule 80 Socket Fittings: ASTM D 2467.
2. PVC, Schedule 80 Threaded Fittings: ASTM D 2464.

C. PVC, AWWA Pipe: AWWA C900, Class 150 and Class 200, with bell end with gasket, and with spigot end.

1. Comply with UL 1285 for fire-service mains if indicated.
2. PVC Fabricated Fittings: AWWA C900, Class 150 and Class 200, with bell-and-spigot or double-bell ends. Include elastomeric gasket in each bell.
3. PVC Molded Fittings: AWWA C907, Class 150, with bell-and-spigot or double-bell ends. Include elastomeric gasket in each bell.
4. Push-on-Joint, Ductile-Iron Fittings: AWWA C110, ductile- or gray-iron standard pattern or AWWA C153, ductile-iron compact pattern.
   a. Gaskets: AWWA C111, rubber.
5. Mechanical-Joint, Ductile-Iron Fittings: AWWA C110, ductile- or gray-iron standard pattern or AWWA C153, ductile-iron compact pattern.
   a. Glands, Gaskets, and Bolts: AWWA C111, ductile- or gray-iron glands, rubber gaskets, and steel bolts.

2.05 SPECIAL PIPE FITTINGS

A. Ductile-Iron Rigid Expansion Joints:
   1. Description: Three-piece, ductile-iron assembly consisting of telescoping sleeve with gaskets and restrained-type, ductile-iron, bell-and-spigot end sections complying with AWWA C110 or AWWA C153. Select and assemble components for expansion indicated. Include AWWA C111, ductile-iron glands, rubber gaskets, and steel bolts.
      a. Pressure Rating: 250 psig minimum.

B. Ductile-Iron Flexible Expansion Joints:
   1. Description: Compound, ductile-iron fitting with combination of flanged and mechanical-joint ends complying with AWWA C110 or AWWA C153. Include two gasketed ball-joint sections and one or more gasketed sleeve sections. Assemble components for offset and expansion indicated. Include AWWA C111, ductile-iron glands, rubber gaskets, and steel bolts.
      a. Pressure Rating: 250 psig minimum.

C. Ductile-Iron Deflection Fittings:
   1. Description: Compound, ductile-iron coupling fitting with sleeve and 1 or 2 flexing sections for up to 15-degree deflection, gaskets, and restrained-joint ends complying with AWWA C110 or AWWA C153. Include AWWA C111, ductile-iron glands, rubber gaskets, and steel bolts.
      a. Pressure Rating: 250 psig minimum.

2.06 JOINING MATERIALS

A. Refer to Division 22 Section "Common Work Results for Plumbing" for commonly used joining materials.

B. Brazing Filler Metals: AWS A5.8, BCuP Series.

C. Bonding Adhesive for Fiberglass Piping: As recommended by fiberglass piping manufacturer.

D. Plastic Pipe-Flange Gasket, Bolts, and Nuts: Type and material recommended by piping system manufacturer, unless otherwise indicated.

2.07 PIPING SPECIALTIES

A. Transition Fittings: Manufactured fitting or coupling same size as, with pressure rating at least equal to and ends compatible with, piping to be joined.

B. Tubular-Sleeve Pipe Couplings:
   1. Description: Metal, bolted, sleeve-type, reducing or transition coupling, with center sleeve, gaskets, end rings, and bolt fasteners and with ends of same sizes as piping to be joined.
      a. Standard: AWWA C219.
      b. Center-Sleeve Material: Manufacturer's standard.
      c. Gasket Material: Natural or synthetic rubber.

d. Pressure Rating: 150 psig minimum.

e. Metal Component Finish: Corrosion-resistant coating or material.

C. Split-Sleeve Pipe Couplings:

1. Description: Metal, bolted, split-sleeve-type, reducing or transition coupling with sealing pad and closure plates, O-ring gaskets, and bolt fasteners.

a. Standard: AWWA C219.

b. Sleeve Material: Manufacturer's standard.

c. Sleeve Dimensions: Of thickness and width required to provide pressure rating.

d. Gasket Material: O-rings made of EPDM rubber, unless otherwise indicated.

e. Pressure Rating: 150 psig minimum.

f. Metal Component Finish: Corrosion-resistant coating or material.

D. Flexible Connectors:

1. Nonferrous-Metal Piping: Bronze hose covered with bronze wire braid; with copper-tube, pressure-type, solder-joint ends or bronze flanged ends brazed to hose.

2. Ferrous-Metal Piping: Stainless-steel hose covered with stainless-steel wire braid; with ASME B1.20.1, threaded steel pipe nipples or ASME B16.5, steel pipe flanges welded to hose.

E. Dielectric Fittings: Combination of copper alloy and ferrous; threaded, solder, or plain end types; and matching piping system materials.

1. Dielectric Unions: Factory-fabricated union assembly, designed for 250-psig minimum working pressure at 180 deg F. Include insulating material that isolates dissimilar metals and ends with inside threads according to ASME B1.20.1.

2. Dielectric Flanges: Factory-fabricated companion-flange assembly, for 150- or 300-psig minimum working pressure to suit system pressures.

3. Dielectric-Flange Insulation Kits: Field-assembled companion-flange assembly, full-face or ring type. Components include neoprene or phenolic gasket, phenolic or polyethylene bolt sleeves, phenolic washers, and steel backing washers.

a. Provide separate companion flanges and steel bolts and nuts for 150- or 300-psig minimum working pressure to suit system pressures.

4. Dielectric Couplings: Galvanized-steel couplings with inert and noncorrosive thermoplastic lining, with threaded ends and 300-psig minimum working pressure at 225 deg F.

5. Dielectric Nipples: Electroplated steel nipples with inert and noncorrosive thermoplastic lining, with combination of plain, threaded, or grooved end types, and 300-psig minimum working pressure at 225 deg F.

2.08 CORROSION-PROTECTION PIPING ENCASEMENT

A. Encasement for Underground Metal Piping:

1. Standards: ASTM A 674 or AWWA C105.

2. Form: Sheet or tube.

3. Material: LLDPE film of 0.008-inch minimum thickness, or high-density, cross-laminated PE film of 0.004-inch minimum thickness.

4. Color: Black or Natural.

2.09 GATE VALVES

A. AWWA, Cast-Iron Gate Valves:

1. Non-rising-Stem, Metal-Seated Gate Valves:

a. Description: Gray- or ductile-iron body and bonnet; with cast-iron or bronze double-disc gate, bronze gate rings, bronze stem, and stem nut.

1) Standard: AWWA C500.

2) Minimum Pressure Rating: 200 psig.
3) End Connections: Mechanical joint.
4) Interior Coating: Complying with AWWA C550.

2. Non-rising-Stem, Resilient-Seated Gate Valves:
   a. Description: Gray- or ductile-iron body and bonnet; with bronze or gray- or ductile-iron gate, resilient seats, bronze stem, and stem nut.
      1) Standard: AWWA C509.
      2) Minimum Pressure Rating: 200 psig.
      3) End Connections: Mechanical joint.
      4) Interior Coating: Complying with AWWA C550.
3. Non-rising-Stem, High-Pressure, Resilient-Seated Gate Valves:
   a. Description: Ductile-iron body and bonnet; with bronze or ductile-iron gate, resilient seats, bronze stem, and stem nut.
      1) Standard: AWWA C509.
      2) Minimum Pressure Rating: 250 psig.
      3) End Connections: Push on or mechanical joint.
      4) Interior Coating: Complying with AWWA C550.
4. OS&Y, Rising-Stem, Metal-Seated Gate Valves:
   a. Description: Cast- or ductile-iron body and bonnet, with cast-iron double disc, bronze disc and seat rings, and bronze stem.
      1) Standard: AWWA C500.
      2) Minimum Pressure Rating: 200 psig.
      3) End Connections: Flanged.
5. OS&Y, Rising-Stem, Resilient-Seated Gate Valves:
   a. Description: Cast- or ductile-iron body and bonnet, with bronze or gray- or ductile-iron gate, resilient seats, and bronze stem.
      1) Standard: AWWA C509.
      2) Minimum Pressure Rating: 200 psig.
      3) End Connections: Flanged.

B. UL/FMG, Cast-Iron Gate Valves:
   1. UL/FMG, Non-rising-Stem Gate Valves:
      a. Description: Iron body and bonnet with flange for indicator post, bronze seating material, and inside screw.
         1) Standards: UL 262 and FMG approved.
         2) Minimum Pressure Rating: 175 psig.
         3) End Connections: Flanged.
   2. OS&Y, Rising-Stem Gate Valves:
      a. Description: Iron body and bonnet and bronze seating material.
         1) Standards: UL 262 and FMG approved.
         2) Minimum Pressure Rating: 175 psig.
         3) End Connections: Flanged.

2.10 GATE VALVE ACCESSORIES AND SPECIALTIES

A. Tapping-Sleeve Assemblies:
   1. Description: Sleeve and valve compatible with drilling machine.
      a. Standard: MSS SP-60.

b. Tapping Sleeve: Cast- or ductile-iron or stainless-steel, two-piece bolted sleeve with flanged outlet for new branch connection. Include sleeve matching size and type of pipe material being tapped and with recessed flange for branch valve.

c. Valve: AWWA, cast-iron, nonrising-stem, resilient-seated gate valve with one raised face flange mating tapping-sleeve flange.

B. Valve Boxes: Comply with AWWA M44 for cast-iron valve boxes. Include top section, adjustable extension of length required for depth of burial of valve, plug with lettering "WATER," and bottom section with base that fits over valve and with a barrel approximately 5 inches in diameter.

1. Operating Wrenches: Steel, tee-handle with one pointed end, stem of length to operate deepest buried valve, and socket matching valve operating nut.

C. Indicator Posts: UL 789, FMG-approved, vertical-type, cast-iron body with operating wrench, extension rod, and adjustable cast-iron barrel of length required for depth of burial of valve.

2.11 CHECK VALVES

A. AWWA Check Valves:

1. Description: Swing-check type with resilient seat. Include interior coating according to AWWA C550 and ends to match piping.

a. Standard: AWWA C508.

b. Pressure Rating: 175 psig.

B. UL/FMG, Check Valves:

1. Description: Swing-check type with pressure rating; rubber-face checks, unless otherwise indicated; and ends matching piping.

a. Standards: UL 312 and FMG approved.

b. Pressure Rating: 175 psig.

2.12 DETECTOR CHECK VALVES

A. Detector Check Valves:

1. Description: Galvanized cast-iron body, bolted cover with air-bleed device for access to internal parts, and flanged ends. Include one-piece bronze disc with bronze bushings, pivot, and replaceable seat. Include threaded bypass taps in inlet and outlet for bypass meter connection. Set valve to allow minimal water flow through bypass meter when major water flow is required.

a. Standards: UL 312 and FMG approved.

b. Pressure Rating: 175 psig.

c. Water Meter: AWWA C700, disc type, at least one-fourth size of detector check valve. Include meter, bypass piping, gate valves, check valve, and connections to detector check valve.

2. Description: Iron body, corrosion-resistant clapper ring and seat ring material, flanged ends, with connections for bypass and installation of water meter.

a. Standards: UL 312 and FMG approved.

b. Pressure Rating: 175 psig.

2.13 BUTTERFLY VALVES

A. AWWA Butterfly Valves:

1. Description: Rubber seated.

a. Standard: AWWA C504.

b. Body: Cast or ductile iron.

c. Body Type: Wafer or flanged.

d. Pressure Rating: 150 psig.

B. UL Butterfly Valves:

1. Description: Metal on resilient material seating.
    a. Standards: UL 1091 and FMG approved.
    b. Body: Cast or ductile iron.
    c. Body Type: Wafer or flanged.
    d. Pressure Rating: 175 psig.

2.14 BACKFLOW PREVENTERS

A. Reduced-Pressure-Principle Backflow Preventers:
1. Standard: ASSE 1013 or AWWA C511.
2. Operation: Continuous-pressure applications.
3. Pressure Loss: 12 psig maximum, through middle 1/3 of flow range.
4. Body: Bronze for NPS 2 and smaller; cast iron with interior lining complying with AWWA C550 or that is FDA approved for NPS 2-1/2 and larger.
5. End Connections: Threaded for NPS 2 and smaller; flanged for NPS 2-1/2 and larger.
6. Configuration: Designed for vertical inlet, horizontal center section, and vertical outlet flow.
7. Accessories:
    a. Valves: Ball type with threaded ends on inlet and outlet of NPS 2 and smaller; OS&Y gate type with flanged ends on inlet and outlet of NPS 2-1/2 and larger.
    b. Air-Gap Fitting: ASME A112.1.2, matching backflow preventer connection.

B. Double-Check, Backflow-Prevention Assemblies:
1. Standard: ASSE 1015 or AWWA C510.
2. Operation: Continuous-pressure applications, unless otherwise indicated.
3. Pressure Loss: 5 psig maximum, through middle 1/3 of flow range.
4. Body: Bronze for NPS 2 and smaller; cast iron with interior lining complying with AWWA C550 or that is FDA approved for NPS 2-1/2 and larger.
5. End Connections: Threaded for NPS 2 and smaller; flanged for NPS 2-1/2 and larger.
6. Configuration: Designed for horizontal, straight through flow.
7. Accessories: Ball valves with threaded ends on inlet and outlet of NPS 2 and smaller; OS&Y gate valves with flanged ends on inlet and outlet of NPS 2-1/2 and larger.

C. Reduced-Pressure-Detector, Fire-Protection Backflow Preventer Assemblies:
1. Standards: ASSE 1047 and UL listed or FMG approved.
2. Operation: Continuous-pressure applications.
3. Pressure Loss: 12 psig maximum, through middle 1/3 of flow range.
4. Body: Cast iron with interior lining complying with AWWA C550 or that is FDA approved.
5. End Connections: Flanged.
6. Configuration: Designed for horizontal, straight through flow.
7. Accessories:
    a. Valves: UL 262, FMG-approved, OS&Y gate type with flanged ends on inlet and outlet.
    b. Air-Gap Fitting: ASME A112.1.2, matching backflow preventer connection.
    c. Bypass: With displacement-type water meter, shutoff valves, and reduced-pressure backflow preventer.

D. Double-Check, Detector-Assembly Backflow Preventers:
1. Standards: ASSE 1048 and UL listed or FMG approved.
2. Operation: Continuous-pressure applications.
3. Pressure Loss: 5 psig maximum, through middle 1/3 of flow range.

4. Body: Cast iron with interior lining complying with AWWA C550 or that is FDA approved.
5. End Connections: Flanged.
6. Configuration: Designed for horizontal, straight through flow.
7. Accessories:
   a. Valves: UL 262, FMG-approved, OS&Y gate type with flanged ends on inlet and outlet.
   b. Bypass: With displacement-type water meter, shutoff valves, and reduced-pressure backflow preventer.

E. Backflow Preventer Test Kits:
1. Description: Factory calibrated, with gages, fittings, hoses, and carrying case with test-procedure instructions.

PART 3 EXECUTION

3.01 EARTHWORK

A. Refer to Division 31 Section "Earth Moving" for excavating, trenching, and backfilling.

3.02 PIPING APPLICATIONS

A. General: Use pipe, fittings, and joining methods for piping systems according to the following applications.

B. Transition couplings and special fittings with pressure ratings at least equal to piping pressure rating may be used, unless otherwise indicated.

C. Do not use flanges or unions for underground piping.

D. Flanges, unions, grooved-end-pipe couplings, and special fittings may be used, instead of joints indicated, on aboveground piping and piping in vaults.

E. Underground water-service piping NPS 3/4 to NPS 3 shall be any of the following:
1. Soft copper tube, ASTM B 88, Type K; ASTM B 88, Type L; wrought-copper, solder-joint fittings; and brazed joints.
2. PE, ASTM pipe; insert fittings for PE pipe; and clamped joints.
3. PVC, Schedule 40 pipe; PVC, Schedule 40 socket fittings; and solvent-cemented joints.

F. Underground water-service piping NPS 4 to NPS 8 shall be any of the following:
1. Soft copper tube, ASTM B 88, Type K; ASTM B 88, Type L; wrought-copper, solder-joint fittings; and brazed joints.
2. Ductile-iron, push-on-joint pipe; ductile-iron, push-on-joint fittings; and gasketed mechanical-joint pipe; ductile-iron, mechanical-joint fittings; and mechanical grooved-end pipe; ductile-iron-pipe appurtenances; and grooved joints.
3. PE, AWWA pipe; PE, AWWA fittings; and heat-fusion joints.
4. PVC, Schedule 40 pipe; PVC, Schedule 40 socket fittings; and solvent-cemented joints.
5. NPS 4 and NPS 6: NPS 6 PVC, AWWA Class 150 pipe; PVC, AWWA Class 150 fabricated or molded fittings; and gasketed joints.
6. NPS 8: PVC, AWWA Class 200 pipe; PVC, AWWA Class 200 fabricated push-on-joint, ductile-iron mechanical-joint, ductile-iron fittings; and gasketed joints.

G. Underground Fire-Service-Main Piping NPS 4 to NPS 12 shall be any of the following:
1. Ductile-iron, push-on-joint pipe; ductile-iron, push-on-joint fittings; and gasketed mechanical-joint pipe; ductile-iron, mechanical-joint fittings; and mechanical grooved-end pipe; ductile-iron-pipe appurtenances; and grooved joints.
2. PE, Class 150, fire-service pipe; molded PE fittings; and heat-fusion joints.
3. PVC, AWWA Class 150 pipe listed for fire-protection service; PVC Class 150 fabricated or molded fittings; and gasketed joints.
4. PVC, AWWA Class 200 pipe listed for fire-protection service; PVC Class 200 fabricated fittings; and gasketed joints.

H. Underground Combined Water-Service and Fire-Service-Main Piping NPS 6 to NPS 12 shall be any of the following:

1. Ductile-iron, push-on-joint pipe; ductile-iron, push-on-joint fittings; and gasketed mechanical-joint pipe; ductile-iron, mechanical-joint fittings; and mechanical grooved-end pipe; ductile-iron-pipe appurtenances; and grooved joints.
2. PVC, AWWA Class 150 pipe listed for fire-protection service; PVC fabricated or molded fittings of same class as pipe; and gasketed joints.

3.03 VALVE APPLICATIONS

A. General Application: Use mechanical-joint-end valves for NPS 3 and larger underground installation. Use threaded- or flanged-end valves for installation in vaults. Use UL/FMG, non-rising-stem gate valves for installation with indicator posts. Use corporation valves and curb valves with ends compatible with piping, for NPS 2 and smaller installation.

B. Drawings indicate valve types to be used. Where specific valve types are not indicated, the following requirements apply:

1. Underground Valves, NPS 3 and Larger: AWWA, cast-iron, nonrising-stem, metal resilient high-pressure, resilient-seated gate valves with valve box.
2. Underground Valves, NPS 4 and Larger, for Indicator Posts: UL/FMG, cast-iron, nonrising-stem gate valves with indicator post.
3. Use the following for valves in vaults and aboveground:
   a. Gate Valves, NPS 2 and Smaller: Bronze, rising stem.
   b. Gate Valves, NPS 3 and Larger: AWWA, cast iron, OS&Y rising stem, metal seated AWWA, cast iron, OS&Y rising stem, resilient seated UL/FMG, cast iron, OS&Y rising stem.
   c. Check Valves: AWWA C508 UL/FMG, swing type.
4. Relief Valves: Use for water-service piping in vaults and aboveground.
   a. Air-Release Valves: To release accumulated air.
   b. Air/Vacuum Valves: To release or admit large volume of air during filling of piping.
   c. Combination Air Valves: To release or admit air.
5. Detector Check Valves: Use for water-service piping in vaults and aboveground to detect unauthorized use of water.

3.04 PIPING SYSTEMS - COMMON REQUIREMENTS

A. See Division 22 Section "Common Work Results for Plumbing" for piping-system common requirements.

3.05 PIPING INSTALLATION

A. Water-Main Connection: Arrange with utility company for tap of size and in location indicated in water main.

B. Water-Main Connection: Tap water main according to requirements of water utility company and of size and in location indicated.

C. Make connections larger than NPS 2 with tapping machine according to the following:

1. Install tapping sleeve and tapping valve according to MSS SP-60.
2. Install tapping sleeve on pipe to be tapped. Position flanged outlet for gate valve.
3. Use tapping machine compatible with valve and tapping sleeve; cut hole in main. Remove tapping machine and connect water-service piping.
4. Install gate valve onto tapping sleeve. Comply with MSS SP-60. Install valve with stem pointing up and with valve box.

D. Make connections NPS 2 and smaller with drilling machine according to the following:

1. Install service-saddle assemblies and corporation valves in size, quantity, and arrangement required by utility company standards.

2. Install service-saddle assemblies on water-service pipe to be tapped. Position outlets for corporation valves.
3. Use drilling machine compatible with service-saddle assemblies and corporation valves. Drill hole in main. Remove drilling machine and connect water-service piping.
4. Install corporation valves into service-saddle assemblies.
5. Install manifold for multiple taps in water main.
6. Install curb valve in water-service piping with head pointing up and with service box.

E. Comply with NFPA 24 for fire-service-main piping materials and installation.
1. Install PE corrosion-protection encasement according to ASTM A 674 or AWWA C105.
2. Install copper tube and fittings according to CDA's "Copper Tube Handbook."

F. Install ductile-iron, water-service piping according to AWWA C600 and AWWA M41.
1. Install PE corrosion-protection encasement according to ASTM A 674 or AWWA C105.

G. Install PE pipe according to ASTM D 2774 and ASTM F 645.

H. Install PVC, AWWA pipe according to ASTM F 645 and AWWA M23.

I. Bury piping with depth of cover over top at least 30 inches, with top at least 12 inches below level of maximum frost penetration, and according to the following:
1. Under Driveways: With at least 36 inches cover over top.
2. Under Railroad Tracks: With at least 48 inches cover over top.
3. In Loose Gravelly Soil and Rock: With at least 12 inches additional cover.

J. Install piping by tunneling or jacking, or combination of both, under streets and other obstructions that cannot be disturbed.

K. Extend water-service piping and connect to water-supply source and building-water-piping systems at outside face of building wall in locations and pipe sizes indicated.
1. Terminate water-service piping at building wall until building-water-piping systems are installed. Terminate piping with caps, plugs, or flanges as required for piping material. Make connections to building-water-piping systems when those systems are installed.

L. Sleeves are specified in Division 22 Section "Common Work Results for Plumbing."

M. Mechanical sleeve seals are specified in Division 22 Section "Common Work Results for Plumbing."

N. Install underground piping with restrained joints at horizontal and vertical changes in direction. Use restrained-joint piping, thrust blocks, anchors, tie-rods and clamps, and other supports.

O. See Division 21 Section "Water-Based Fire-Suppression Systems" for fire-suppression-water piping inside the building.

P. See Division 22 Section "Domestic Water Piping" for potable-water piping inside the building.

3.06 JOINT CONSTRUCTION

A. See Division 22 Section "Common Work Results for Plumbing" for basic piping joint construction.

B. Make pipe joints according to the following:
1. Copper-Tubing, Pressure-Sealed Joints: Use proprietary crimping tool and procedure recommended by copper, pressure-seal-fitting manufacturer.
2. Ductile-Iron Piping, Gasketed Joints for Water-Service Piping: AWWA C600 and AWWA M41.
3. Ductile-Iron Piping, Gasketed Joints for Fire-Service-Main Piping: UL 194.
4. Ductile-Iron Piping, Grooved Joints: Cut-groove pipe. Assemble joints with grooved-end, ductile-iron-piping couplings, gaskets, lubricant, and bolts according to coupling manufacturer's written instructions.
5. PE Piping Insert-Fitting Joints: Use plastic insert fittings and fasteners according to fitting manufacturer's written instructions.

6. PVC Piping Gasketed Joints: Use joining materials according to AWWA C900. Construct joints with elastomeric seals and lubricant according to ASTM D 2774 or ASTM D 3139 and pipe manufacturer's written instructions.
7. Dissimilar Materials Piping Joints: Use adapters compatible with both piping materials, with OD, and with system working pressure. Refer to Division 22 Section "Common Work Results for Plumbing" for joining piping of dissimilar metals.

3.07 ANCHORAGE INSTALLATION

A. Anchorage, General: Install water-distribution piping with restrained joints. Anchorages and restrained-joint types that may be used include the following:
   1. Concrete thrust blocks.
   2. Locking mechanical joints.
   3. Set-screw mechanical retainer glands.
   4. Bolted flanged joints.
   5. Heat-fused joints.
   6. Pipe clamps and tie rods.
B. Install anchorages for tees, plugs and caps, bends, crosses, valves, and hydrant branches. Include anchorages for the following piping systems:
   1. Gasketed-Joint, Ductile-Iron, Water-Service Piping: According to AWWA C600.
   2. Gasketed-Joint, PVC Water-Service Piping: According to AWWA M23.
   3. Bonded-Joint Fiberglass, Water-Service Piping: According to AWWA M45.
   4. Fire-Service-Main Piping: According to NFPA 24.
C. Apply full coat of asphalt or other acceptable corrosion-resistant material to surfaces of installed ferrous anchorage devices.

3.08 VALVE INSTALLATION

A. AWWA Gate Valves: Comply with AWWA C600 and AWWA M44. Install each underground valve with stem pointing up and with valve box.
B. AWWA Valves Other Than Gate Valves: Comply with AWWA C600 and AWWA M44.
C. UL/FMG, Gate Valves: Comply with NFPA 24. Install each underground valve and valves in vaults with stem pointing up and with vertical cast-iron indicator post.
D. UL/FMG, Valves Other Than Gate Valves: Comply with NFPA 24.
E. MSS Valves: Install as component of connected piping system.
F. Corporation Valves and Curb Valves: Install each underground curb valve with head pointed up and with service box.
G. Relief Valves: Comply with AWWA C512. Install aboveground with shutoff valve on inlet.

3.09 DETECTOR-CHECK VALVE INSTALLATION

A. Install in vault or aboveground.
B. Install for proper direction of flow. Install bypass with water meter, gate valves on each side of meter, and check valve downstream from meter.
C. Support detector check valves, meters, shutoff valves, and piping on brick or concrete piers.

3.10 VACUUM BREAKER ASSEMBLY INSTALLATION

A. Do not install pressure vacuum breaker assemblies in vault or other space subject to flooding.

3.11 BACKFLOW PREVENTER INSTALLATION

A. Install backflow preventers of type, size, and capacity indicated. Include valves and test cocks. Install according to requirements of plumbing and health department and authorities having jurisdiction.
B. Do not install backflow preventers that have relief drain in vault or in other spaces subject to flooding.
C. Do not install bypass piping around backflow preventers.

D. Support NPS 2-1/2 and larger backflow preventers, valves, and piping near floor and on brick or concrete piers.

3.12 CONNECTIONS

A. Piping installation requirements are specified in other Division 22 Sections. Drawings indicate general arrangement of piping, fittings, and specialties.

B. See Division 22 Section "Common Work Results for Plumbing" for piping connections to valves and equipment.

C. Connect water-distribution piping to utility water main existing water main. Use tapping sleeve and tapping valve service clamp and corporation valve.

D. Connect water-distribution piping to interior domestic water and fire-suppression piping.

E. Ground equipment according to Division 26 Section "Grounding and Bonding for Electrical Systems."

F. Connect wiring according to Division 26 Section "Low-Voltage Electrical Power Conductors and Cables."

3.13 FIELD QUALITY CONTROL

A. Piping Tests: Conduct piping tests before joints are covered and after concrete thrust blocks have hardened sufficiently. Fill pipeline 24 hours before testing and apply test pressure to stabilize system. Use only potable water.

B. Hydrostatic Tests: Test at not less than one-and-one-half times working pressure for two hours.

1. Increase pressure in 50-psig increments and inspect each joint between increments. Hold at test pressure for 1 hour; decrease to 0 psig. Slowly increase again to test pressure and hold for 1 more hour. Maximum allowable leakage is 2 quarts per hour per 100 joints. Remake leaking joints with new materials and repeat test until leakage is within allowed limits.

C. Prepare reports of testing activities.

3.14 IDENTIFICATION

A. Install continuous underground detectable warning tape during backfilling of trench for underground water-distribution piping. Locate below finished grade, directly over piping. Underground warning tapes are specified in Division 31 Section "Earth Moving."

B. Permanently attach equipment nameplate or marker indicating plastic water-service piping, on main electrical meter panel. See Division 22 Section "Common Work Results for Plumbing" for identifying devices.

3.15 CLEANING

A. Clean and disinfect water-distribution piping as follows:

1. Purge new water-distribution piping systems and parts of existing systems that have been altered, extended, or repaired before use.

2. Use purging and disinfecting procedure prescribed by authorities having jurisdiction or, if method is not prescribed by authorities having jurisdiction, use procedure described in NFPA 24 for flushing of piping. Flush piping system with clean, potable water until dirty water does not appear at points of outlet.

3. Use purging and disinfecting procedure prescribed by authorities having jurisdiction or, if method is not prescribed by authorities having jurisdiction, use procedure described in AWWA C651 or do as follows:

a. Fill system or part of system with water/chlorine solution containing at least 50 ppm of chlorine; isolate and allow to stand for 24 hours.

b. Drain system or part of system of previous solution and refill with water/chlorine solution containing at least 200 ppm of chlorine; isolate and allow to stand for 3 hours.

c. After standing time, flush system with clean, potable water until no chlorine remains in water coming from system.

d. Submit water samples in sterile bottles to authorities having jurisdiction. Repeat procedure if biological examination shows evidence of contamination.

B. Prepare reports of purging and disinfecting activities.

END OF SECTION 33 10 00

SECTION 33 30 00

FACILITY SANITARY SEWERS

PART 1 GENERAL

1.01 RELATED DOCUMENTS

A. Drawings and general provisions of the Contract, including General and Supplementary Conditions and Division 01 Specification Sections, apply to this Section.

1.02 SUMMARY

A. This Section includes gravity-flow, nonpressure sanitary sewerage outside the building, with the following components:

1. Special fittings for expansion and deflection.
2. Cleanouts.
3. Corrosion-protection piping encasement.
4. Precast concrete manholes.

1.03 DEFINITIONS

A. ABS: Acrylonitrile-butadiene-styrene plastic.

B. EPDM: Ethylene-propylene-diene-monomer rubber.

C. LLDPE: Linear low-density, polyethylene plastic.

D. PE: Polyethylene plastic.

E. PP: Polypropylene plastic.

F. PVC: Polyvinyl chloride plastic.

G. TPE: Thermoplastic elastomer.

1.04 PERFORMANCE REQUIREMENTS

A. Gravity-Flow, Nonpressure, Drainage-Piping Pressure Rating: 10-foot head of water.

1.05 SUBMITTALS

A. Product Data: For the following:

1. Special pipe fittings.

B. Shop Drawings: For the following:

1. Manholes: Include plans, elevations, sections, details, and frames and covers.

C. Coordination Drawings: Show pipe sizes, locations, and elevations. Show other piping in same trench and clearances from sewerage system piping. Indicate interface and spatial relationship between manholes, piping, and proximate structures.

D. Field quality-control test reports.

1.06 DELIVERY, STORAGE, AND HANDLING

A. Do not store plastic manholes, pipe, and fittings in direct sunlight.

B. Protect pipe, pipe fittings, and seals from dirt and damage.

C. Handle manholes according to manufacturer's written rigging instructions.

1.07 PROJECT CONDITIONS

A. Interruption of Existing Sanitary Sewerage Service: Do not interrupt service to facilities occupied by Owner or others unless permitted under the following conditions and then only after arranging to provide temporary service according to requirements indicated:

1. Notify Owner no fewer than two days in advance of proposed interruption of service.
2. Do not proceed with interruption of service without Owner's written permission.

PART 2 PRODUCTS

2.01 MANUFACTURERS

A. In other Part 2 articles where titles below introduce lists, the following requirements apply to product selection:

1. Available Manufacturers: Subject to compliance with requirements, manufacturers offering products that may be incorporated into the Work include, but are not limited to, manufacturers specified.

2.02 PIPING MATERIALS

A. Refer to Part 3 "Piping Applications" Article for applications of pipe, fitting, and joining materials.

2.03 DUCTILE-IRON, GRAVITY SEWER PIPE AND FITTINGS

A. Pipe: ASTM A 746, for push-on joints.

B. Standard Fittings: AWWA C110, ductile or gray iron, for push-on joints.

C. Compact Fittings: AWWA C153, for push-on joints.

D. Gaskets: AWWA C111, rubber.

2.04 DUCTILE-IRON PRESSURE PIPE AND FITTINGS

A. Pipe: AWWA C151, for push-on joints.

B. Standard Fittings: AWWA C110, ductile or gray iron, for push-on joints.

C. Compact Fittings: AWWA C153, for push-on joints.

D. Gaskets: AWWA C111, rubber.

2.05 PVC PIPE AND FITTINGS

A. PVC Pressure Pipe: AWWA C900, Class 150, for gasketed joints and using ASTM F 477, elastomeric seals.

1. Fittings NPS 4 to NPS 8: PVC pressure fittings complying with AWWA C907, for gasketed joints and using ASTM F 477, elastomeric seals.

2. Fittings NPS 10 and Larger: Ductile-iron, compact fittings complying with AWWA C153, for push-on joints and using AWWA C111, rubber gaskets.

B. PVC Water-Service Pipe and Fittings: ASTM D 1785, Schedule 40 pipe, with plain ends for solvent-cemented joints with ASTM D 2466, Schedule 40, socket-type fittings.

C. PVC Cellular-Core Pipe and Fittings: ASTM F 891, Sewer and Drain Series, PS 50 minimum stiffness pipe with ASTM D 3034, SDR 35, socket-type fittings for solvent-cemented joints.

D. PVC Sewer Pipe and Fittings, NPS 15 and Smaller: ASTM D 3034, SDR 35, with bell-and-spigot ends for gasketed joints with ASTM F 477, elastomeric seals.

E. PVC Sewer Pipe and Fittings, NPS 18 and Larger: ASTM F 679, T-2 wall thickness, with bell-and-spigot ends for gasketed joints with ASTM F 477, elastomeric seals.

F. PVC Profile Gravity Sewer Pipe and Fittings: ASTM F 794 pipe, with bell-and-spigot ends; ASTM D 3034 fittings, with bell ends; and ASTM F 477, elastomeric seals.

2.06 NONPRESSURE-TYPE PIPE COUPLINGS

A. Comply with ASTM C 1173, elastomeric, sleeve-type, reducing or transition coupling, for joining underground nonpressure piping. Include ends of same sizes as piping to be joined and corrosion-resistant-metal tension band and tightening mechanism on each end.

B. Sleeve Materials:

1. For Concrete Pipes: ASTM C 443, rubber.

2. For Cast-Iron Soil Pipes: ASTM C 564, rubber.

3. For Plastic Pipes: ASTM F 477, elastomeric seal or ASTM D 5926, PVC.

4. For Dissimilar Pipes: ASTM D 5926, PVC or other material compatible with pipe materials being joined.

C. Unshielded, Flexible Couplings: Elastomeric sleeve with stainless-steel shear ring and corrosion-resistant-metal tension band and tightening mechanism on each end.

D. Shielded, Flexible Couplings: ASTM C 1460, elastomeric or rubber sleeve with full-length, corrosion-resistant outer shield and corrosion-resistant-metal tension band and tightening mechanism on each end.

E. Ring-Type, Flexible Couplings: Elastomeric compression seal with dimensions to fit inside bell of larger pipe and for spigot of smaller pipe to fit inside ring.

F. Nonpressure-Type, Rigid Couplings: ASTM C 1461, sleeve-type reducing- or transition-type mechanical coupling molded from ASTM C 1440, TPE material with corrosion-resistant-metal tension band and tightening mechanism on each end.

2.07 SPECIAL PIPE FITTINGS

A. Ductile-Iron, Flexible Expansion Joints: Compound fitting with combination of flanged and mechanical-joint ends complying with AWWA C110 or AWWA C153. Include 2 gasketed ball-joint sections and 1 or more gasketed sleeve sections, rated for 250-psig minimum working pressure and for offset and expansion indicated.

B. Ductile-Iron Deflection Fittings: Compound coupling fitting with ball joint, flexing section, gaskets, and restrained-joint ends complying with AWWA C110 or AWWA C153. Include rating for 250-psig minimum working pressure and for up to 15 degrees of deflection.

C. Ductile-Iron Expansion Joints: Three-piece assembly of telescoping sleeve with gaskets and restrained-type, ductile-iron, bell-and-spigot end sections complying with AWWA C110 or AWWA C153. Include rating for 250-psig minimum working pressure and for expansion indicated.

2.08 CLEANOUTS

A. Gray-Iron Cleanouts: ASME A112.36.2M, round, gray-iron housing with clamping device and round, secured, scoriated, gray-iron cover. Include gray-iron ferrule with inside calk or spigot connection and countersunk, tapered-thread, brass closure plug.

1. Top-Loading Classification: Heavy duty.
2. Sewer Pipe Fitting and Riser to Cleanout: ASTM A 74, Service class, cast-iron soil pipe and fittings.

B. PVC Cleanouts: PVC body with PVC threaded plug. Include PVC sewer pipe fitting and riser to cleanout of same material as sewer piping.

2.09 CORROSION-PROTECTION PIPING ENCASEMENT

A. Encasement for Underground Metal Piping: ASTM A 674 or AWWA C105.

1. Form: Sheet or tube.
2. Material: LLDPE film of 0.008-inch minimum thickness.
3. Material: LLDPE film of 0.008-inch minimum thickness or high-density, crosslaminated PE film of 0.004-inch minimum thickness.
4. Material: High-density, crosslaminated PE film of 0.004-inch minimum thickness.
5. Color: Black, Natural.

2.10 MANHOLES

A. Standard Precast Concrete Manholes: ASTM C 478, precast, reinforced concrete, of depth indicated, with provision for sealant joints.

1. Diameter: 48 inches minimum, unless otherwise indicated.
2. Ballast: Increase thickness of precast concrete sections or add concrete to base section, as required to prevent flotation.
3. Base Section: 6-inch minimum thickness for floor slab and 5-inch minimum thickness for walls and base riser section, and having separate base slab or base section with integral floor.
4. Riser Sections: 5-inch minimum thickness, and of length to provide depth indicated.

5. Top Section: Eccentric-cone type, unless concentric-cone or flat-slab-top type is indicated. Top of cone of size that matches grade rings.
6. Joint Sealant: ASTM C 990, bitumen or butyl rubber.
7. Resilient Pipe Connectors: ASTM C 923, cast or fitted into manhole walls, for each pipe connection.
8. Steps: Individual FRP steps, FRP ladder, or ASTM A 615/A 615M, deformed, 1/2-inch steel reinforcing rods encased in ASTM D 4101, PP, wide enough to allow worker to place both feet on 1 step and designed to prevent lateral slippage off of step. Cast or anchor steps into sidewalls at 12- to 16-inch intervals. Omit steps if total depth from floor of manhole to finished grade is less than 60 inches.
9. Adjusting Rings: Interlocking rings with level or sloped edge in thickness and diameter matching manhole frame and cover. Include sealant recommended by ring manufacturer.
10. Grade Rings: Reinforced-concrete rings, 6- to 9-inch total thickness, to match diameter of manhole frame and cover.
11. Protective Coating: Plant-applied, SSPC-Paint 16, coal-tar, epoxy-polyamide paint; 10-mil minimum thickness applied to exterior and interior surfaces.
12. Manhole Frames and Covers: Ferrous; 24-inch ID by 7- to 9-inch riser with 4-inch-minimum width flange and 26-inch-diameter cover. Include indented top design with lettering cast into cover, using wording equivalent to "SANITARY SEWER."
    a. Material: ASTM A 536, Grade 60-40-18 ductile iron, unless otherwise indicated.
    b. Protective Coating: Foundry-applied, SSPC-Paint 16, coal-tar, epoxy-polyamide paint; 10-mil minimum thickness applied to all surfaces, unless otherwise indicated.

B. Designed Precast Concrete Manholes: ASTM C 913; designed according to ASTM C 890 for A-16 (ASSHTO HS20-44), heavy-traffic, structural loading; of depth, shape, and dimensions indicated, with provision for sealant joints.
1. Ballast: Increase thickness of one or more precast concrete sections or add concrete to manhole as required to prevent flotation.
2. Joint Sealant: ASTM C 990, bitumen or butyl rubber.
3. Resilient Pipe Connectors: ASTM C 923, cast or fitted into manhole walls, for each pipe connection.
4. Steps: Individual FRP steps, FRP ladder, or ASTM A 615/A 615M, deformed, 1/2-inch steel reinforcing rods encased in ASTM D 4101, PP, wide enough to allow worker to place both feet on 1 step and designed to prevent lateral slippage off of step. Cast or anchor steps into sidewalls at 12- to 16-inch intervals. Omit steps if total depth from floor of manhole to finished grade is less than 60 inches.
5. Adjusting Rings: Interlocking rings with level or sloped edge in thickness and diameter matching manhole frame and cover. Include sealant recommended by ring manufacturer.
6. Grade Rings: Reinforced-concrete rings, 6- to 9-inch total thickness, to match diameter of manhole frame and cover.
7. Protective Coating: Plant-applied, SSPC-Paint 16, coal-tar, epoxy-polyamide paint; 10-mil minimum thickness applied to exterior and interior surfaces.
8. Manhole Frames and Covers: Ferrous; 24-inch ID by 7- to 9-inch riser with 4-inch-minimum width flange and 26-inch-diameter cover. Include indented top design with lettering cast into cover, using wording equivalent to "SANITARY SEWER."
    a. Material: ASTM A 536, Grade 60-40-18 ductile; ASTM A 48/A 48M, Class 35 gray iron, unless otherwise indicated.
    b. Protective Coating: Foundry-applied, SSPC-Paint 16, coal-tar, epoxy-polyamide paint; 10-mil minimum thickness applied to all surfaces, unless otherwise indicated.

C. Manhole Cover Inserts: Manufactured, plastic form, of size to fit between manhole frame and cover and designed to prevent stormwater inflow. Include handle for removal and gasket for gastight sealing.

1. Type: Solid.

2.11 CONCRETE

A. General: Cast-in-place concrete according to ACI 318/318R, ACI 350R, and the following:

1. Cement: ASTM C 150, Type II.
2. Fine Aggregate: ASTM C 33, sand.
3. Coarse Aggregate: ASTM C 33, crushed gravel.
4. Water: Potable.

B. Portland Cement Design Mix: 4000 psi minimum, with 0.45 maximum water/cementitious materials ratio.

1. Reinforcement Fabric: ASTM A 185, steel, welded wire fabric, plain.
2. Reinforcement Bars: ASTM A 615/A 615M, Grade 60, deformed steel.

C. Manhole Channels and Benches: Factory or field formed from concrete. Portland cement design mix, 4000 psi minimum, with 0.45 maximum water/cementitious materials ratio. Include channels and benches in manholes.

1. Channels: Concrete invert, formed to same width as connected piping, with height of vertical sides to three-fourths of pipe diameter. Form curved channels with smooth, uniform radius and slope.
   a. Invert Slope: 2 percent through manhole.
2. Benches: Concrete, sloped to drain into channel.
   a. Slope: 4 percent.

D. Ballast and Pipe Supports: Portland cement design mix, 3000 psi minimum, with 0.58 maximum water/cementitious materials ratio.

1. Reinforcement Fabric: ASTM A 185, steel, welded wire fabric, plain.
2. Reinforcement Bars: ASTM A 615/A 615M, Grade 60, deformed steel.

2.12 MISCELLANEOUS MATERIALS

A. Paint: SSPC-Paint 16.

B. PE Sheeting: ASTM D 4397, with at least 8-mil thickness or other equivalent, impervious material.

PART 3 EXECUTION

3.01 EARTHWORK

A. Excavating, trenching, and backfilling are specified in Division 31 Section "Earth Moving."

3.02 PIPING APPLICATIONS

A. Pipe couplings and special pipe fittings with pressure ratings at least equal to piping rating may be used in applications below, unless otherwise indicated.

1. Use nonpressure-type flexible couplings where required to join gravity-flow, nonpressure sewer piping, unless otherwise indicated.
   a. Unshielded flexible or rigid couplings for same or minor difference OD pipes.
   b. Unshielded, increaser/reducer-pattern, flexible or rigid couplings for pipes with different OD.
   c. Ring-type flexible couplings for piping of different sizes where annular space between smaller piping's OD and larger piping's ID permits installation.
2. Use pressure-type pipe couplings for force-main joints.

B. Special Pipe Fittings: Use for pipe expansion and deflection. Pipe couplings and special pipe fittings with pressure ratings at least equal to piping rating may be used in applications below, unless otherwise indicated.

C. Gravity-Flow, Non-pressure Sewer Piping: Use any of the following pipe materials for each size range:

1. NPS 3: NPS 6 ductile-iron, gravity sewer pipe or NPS 3 or NPS 4 ductile-iron pressure pipe; ductile-iron standard or compact fittings; gaskets; and gasketed joints.
2. NPS 3: Stainless-steel drainage pipe and fittings, gaskets, and gasketed joints. Use EPDM-compound gaskets, unless otherwise indicated. Use nitrile-rubber-compound gaskets for wastes containing gasoline or oil.
3. NPS 3: ABS, SDR 35, sewer pipe and fittings; gaskets; and gasketed joints.
4. NPS 3: PVC water-service pipe; PVC Schedule 40, water-service-pipe fittings; and solvent-cemented joints.
5. NPS 3: NPS 4 PVC sewer pipe and fittings, gaskets, and gasketed joints.
6. NPS 3: NPS 4 Class 2, nonreinforced-concrete sewer pipe and fittings, gaskets, and gasketed joints.
7. NPS 4: NPS 6 ductile-iron, gravity sewer pipe or NPS 4 ductile-iron pressure pipe; ductile-iron standard or compact fittings; gaskets; and gasketed joints.
8. NPS 4: Stainless-steel drainage pipe and fittings, gaskets, and gasketed joints. Use EPDM-compound gaskets, unless otherwise indicated. Use nitrile-rubber-compound gaskets for wastes containing gasoline or oil.
9. NPS 4: ABS, SDR 35, sewer pipe and fittings; gaskets; and gasketed joints.
10. NPS 4: PVC water-service pipe; PVC Schedule 40, water-service-pipe fittings; and solvent-cemented joints.
11. NPS 4: PVC sewer pipe and fittings, gaskets, and gasketed joints.
12. NPS 4: Class 2, nonreinforced-concrete sewer pipe and fittings, gaskets, and gasketed joints.
13. NPS 5 and NPS 6: NPS 6 ductile-iron, gravity sewer pipe; ductile-iron standard or compact fittings; gaskets; and gasketed joints.
14. NPS 5 and NPS 6: NPS 6 stainless-steel drainage pipe and fittings, gaskets, and gasketed joints. Use EPDM-compound gaskets, unless otherwise indicated. Use nitrile-rubber-compound gaskets for wastes containing gasoline or oil.
15. NPS 5 and NPS 6: NPS 6 ABS, SDR 35, sewer pipe and fittings; gaskets; and gasketed joints.
16. NPS 5 and NPS 6: NPS 6 cellular-core PVC pipe, PVC sewer pipe fittings, and solvent-cemented joints.
17. NPS 5 and NPS 6: NPS 6 PVC sewer pipe and fittings, gaskets, and gasketed joints.
18. NPS 5 and NPS 6: NPS 6 Class 2, non-reinforced-concrete sewer pipe and fittings, gaskets, and gasketed joints.
19. NPS 8 and NPS 10: Ductile-iron, gravity sewer pipe; ductile-iron standard or compact fittings; gaskets; and gasketed joints.

3.03 PIPING INSTALLATION

A. General Locations and Arrangements: Drawing plans and details indicate general location and arrangement of underground sanitary sewerage piping. Location and arrangement of piping layout take design considerations into account. Install piping as indicated, to extent practical. Where specific installation is not indicated, follow piping manufacturer's written instructions.

B. Install piping beginning at low point, true to grades and alignment indicated with unbroken continuity of invert. Place bell ends of piping facing upstream. Install gaskets, seals, sleeves,

and couplings according to manufacturer's written instructions for using lubricants, cements, and other installation requirements.

C. Install manholes for changes in direction, unless fittings are indicated. Use fittings for branch connections, unless direct tap into existing sewer is indicated.

D. Install proper size increasers, reducers, and couplings where different sizes or materials of pipes and fittings are connected. Reducing size of piping in direction of flow is prohibited.

E. Tunneling: Install pipe under streets or other obstructions that cannot be disturbed by tunneling, jacking, or combination of both.

F. Install gravity-flow, nonpressure, drainage piping according to the following:

1. Install piping pitched down in direction of flow, at minimum slope of 1 percent, unless otherwise indicated.
2. Install piping NPS 6 and larger with restrained joints at tee fittings and at changes in direction. Use corrosion-resistant rods, pipe or fitting manufacturer's proprietary restraint system, or cast-in-place-concrete supports or anchors.
3. Install piping with 36-inch minimum cover.
4. Install piping below frost line.
5. Install ductile-iron, gravity sewer piping according to ASTM A 746.
6. Install ductile-iron and special fittings according to AWWA C600 or AWWA M41.
7. Install stainless-steel drainage piping according to ASME A112.3.1.
8. Install ABS sewer piping according to ASTM D 2321 and ASTM F 1668.
9. Install PVC cellular-core piping according to ASTM D 2321 and ASTM F 1668.
10. Install PVC sewer piping according to ASTM D 2321 and ASTM F 1668.
11. Install PVC profile gravity sewer piping according to ASTM D 2321 and ASTM F 1668.
12. Install non-reinforced-concrete sewer piping according to ASTM C 1479 and ACPA's "Concrete Pipe Installation Manual."
13. Install reinforced-concrete sewer piping according to ASTM C 1479 and ACPA's "Concrete Pipe Installation Manual."

G. Install corrosion-protection piping encasement over the following underground metal piping according to ASTM A 674 or AWWA C105:

1. Ductile-iron pipe and fittings.
2. Special pipe fittings.

H. Clear interior of piping and manholes of dirt and superfluous material as work progresses. Maintain swab or drag in piping, and pull past each joint as it is completed. Place plug in end of incomplete piping at end of day and when work stops.

3.04 PIPE JOINT CONSTRUCTION

A. Basic piping joint construction is specified in Division 22 Section "Common Work Results for Plumbing" Where specific joint construction is not indicated, follow piping manufacturer's written instructions.

B. Join gravity-flow, nonpressure, drainage piping according to the following:

1. Join ductile-iron, gravity sewer piping according to AWWA C600 for push-on joints.
2. Join ductile-iron and special fittings according to AWWA C600 or AWWA M41.
3. Join stainless-steel drainage piping according to ASME A112.3.1.
4. Join ABS sewer piping according to ASTM D 2321 and ASTM D 2751 for elastomeric-seal joints.
5. Join PVC cellular-core piping according to ASTM D 2321 and ASTM F 891 for solvent-cemented joints.
6. Join PVC sewer piping according to ASTM D 2321 and ASTM D 3034 for elastomeric-seal joints or ASTM D 3034 for elastomeric-gasket joints.

7. Join PVC profile gravity sewer piping according to ASTM D 2321 for elastomeric-seal joints or ASTM F 794 for gasketed joints.
8. Join non-reinforced-concrete sewer piping according to ASTM C 14 and ACPA's "Concrete Pipe Installation Manual" for rubber-gasket joints.
9. Join reinforced-concrete sewer piping according to ACPA's "Concrete Pipe Installation Manual" for rubber-gasket joints.
10. Join dissimilar pipe materials with nonpressure-type, flexible or rigid couplings.

C. Join force-main, pressure piping according to the following:
1. Join ductile-iron pressure piping according to AWWA C600 or AWWA M41 for push-on joints.
2. Join ductile-iron special fittings according to AWWA C600 or AWWA M41 for push-on joints.
3. Join PVC pressure piping according AWWA M23 for gasketed joints.
4. Join PVC water-service piping according ASTM D 2855.
5. Join dissimilar pipe materials with pressure-type couplings.

3.05 MANHOLE INSTALLATION

A. General: Install manholes complete with appurtenances and accessories indicated.
B. Install precast concrete manhole sections with sealants according to ASTM C 891.
C. Construct cast-in-place manholes as indicated.
D. Install PE sheeting on earth where cast-in-place-concrete manholes are to be built.
E. Form continuous concrete channels and benches between inlets and outlet.
F. Set tops of frames and covers flush with finished surface of manholes that occur in pavements. Set tops 3 inches above finished surface elsewhere, unless otherwise indicated.
G. Install manhole cover inserts in frame and immediately below cover.

3.06 CONCRETE PLACEMENT

A. Place cast-in-place concrete according to ACI 318/318R.

3.07 CLEANOUT INSTALLATION

A. Install cleanouts and riser extensions from sewer pipes to cleanouts at grade. Use cast-iron soil pipe fittings in sewer pipes at branches for cleanouts and cast-iron soil pipe for riser extensions to cleanouts. Install piping so cleanouts open in direction of flow in sewer pipe.
1. Use light-duty, top-loading classification cleanouts in earth or unpaved foot-traffic areas.
2. Use medium-duty, top-loading classification cleanouts in paved foot-traffic areas.
3. Use heavy-duty, top-loading classification cleanouts in vehicle-traffic service areas.
4. Use extra-heavy-duty, top-loading classification cleanouts in roads.

B. Set cleanout frames and covers in earth in cast-in-place-concrete block, 24 by 24 by 12 inches deep. Set with tops 1 inch above surrounding grade.
C. Set cleanout frames and covers in earth placed on prepared, compacted stone. Frmes shall be centered on pipe. Top shall be set flush with surrounding grade.
D. Set cleanout frames and covers in concrete pavement with tops flush with pavement surface.

3.08 CONNECTIONS

A. Connect nonpressure, gravity-flow drainage piping to building's sanitary building drains specified in Division 22 Section "Sanitary Waste and Vent Piping."
B. Connect pressure, force-main piping to building's sanitary force mains specified in Division 22 Section "Sanitary Waste and Vent Piping." Terminate piping where indicated.
C. Make connections to existing piping and underground manholes.
1. Use commercially manufactured wye fittings for piping branch connections. Remove section of existing pipe; install wye fitting into existing piping; and encase entire wye

fitting, plus 6-inch overlap, with not less than 6 inches of concrete with 28-day compressive strength of 3000 psi.

2. Make branch connections from side into existing piping, NPS 4 to NPS 20. Remove section of existing pipe; install wye fitting into existing piping; and encase entire wye with not less than 6 inches of concrete with 28-day compressive strength of 3000 psi.
3. Make branch connections from side into existing piping, NPS 21 or larger, or to underground manholes by cutting opening into existing unit large enough to allow 3 inches of concrete to be packed around entering connection. Cut end of connection pipe passing through pipe or structure wall to conform to shape of and be flush with inside wall, unless otherwise indicated. On outside of pipe or manhole wall, encase entering connection in 6 inches of concrete for minimum length of 12 inches to provide additional support of collar from connection to undisturbed ground.
   a. Use concrete that will attain minimum 28-day compressive strength of 3000 psi, unless otherwise indicated.
   b. Use epoxy-bonding compound as interface between new and existing concrete and piping materials.
4. Protect existing piping and manholes to prevent concrete or debris from entering while making tap connections. Remove debris or other extraneous material that may accumulate.

3.09 CLOSING ABANDONED SANITARY SEWERAGE SYSTEMS

A. Abandoned Piping: Close open ends of abandoned underground piping indicated to remain in place. Include closures strong enough to withstand hydrostatic and earth pressures that may result after ends of abandoned piping have been closed. Use either procedure below:
   1. Close open ends of piping with at least 8-inch- thick, brick masonry bulkheads.
   2. Close open ends of piping with threaded metal caps, plastic plugs, or other acceptable methods suitable for size and type of material being closed. Do not use wood plugs.

B. Abandoned Manholes: Excavate around manhole as required and use either procedure below:
   1. Remove manhole and close open ends of remaining piping.
   2. Remove top of manhole down to at least 36 inches below final grade. Fill to within 12 inches of top with stone, rubble, gravel, or compacted dirt. Fill to top with concrete.

C. Backfill to grade according to Division 31 Section "Earth Moving."

3.10 PAINTING

A. Clean and prepare concrete manhole surfaces for field painting. Remove loose efflorescence, chalk, dust, grease, oils, and release agents. Roughen surface as required to remove glaze. Paint the following concrete surfaces as recommended by paint manufacturer:
   1. Cast-in-Place-Concrete Manholes: All exterior, except bottom and all interior.
   2. Precast Concrete Manholes: All exterior and interior.

B. Prepare ferrous frame and cover surfaces according to SSPC-PA 1 and paint according to SSPC-PA 1 and SSPC-Paint 16. Do not paint surfaces with foundry-applied corrosion-resistant coating.

3.11 IDENTIFICATION

A. Materials and their installation are specified in Division 31 Section "Earth Moving." Arrange for installation of green warning tapes directly over piping and at outside edges of underground manholes.
   1. Use warning tape or detectable warning tape over ferrous piping.
   2. Use detectable warning tape over nonferrous piping and over edges of underground manholes.

3.12 FIELD QUALITY CONTROL

A. Inspect interior of piping to determine whether line displacement or other damage has occurred. Inspect after approximately 24 inches of backfill is in place, and again at completion of Project.
   1. Submit separate report for each system inspection.
   2. Defects requiring correction include the following:
      a. Alignment: Less than full diameter of inside of pipe is visible between structures.
      b. Deflection: Flexible piping with deflection that prevents passage of ball or cylinder of size not less than 92.5 percent of piping diameter.
      c. Crushed, broken, cracked, or otherwise damaged piping.
      d. Infiltration: Water leakage into piping.
      e. Exfiltration: Water leakage from or around piping.
   3. Replace defective piping using new materials, and repeat inspections until defects are within allowances specified.
   4. Reinspect and repeat procedure until results are satisfactory.

B. Test new piping systems, and parts of existing systems that have been altered, extended, or repaired, for leaks and defects.
   1. Do not enclose, cover, or put into service before inspection and approval.
   2. Test completed piping systems according to requirements of authorities having jurisdiction.
   3. Schedule tests and inspections by authorities having jurisdiction with at least 24 hours' advance notice.
   4. Submit separate report for each test.
   5. Hydrostatic Tests: Test sanitary sewerage according to requirements of authorities having jurisdiction and the following:
      a. Allowable leakage is maximum of 50 gal./inch of nominal pipe size per mile of pipe, during 24-hour period.
      b. Close openings in system and fill with water.
      c. Purge air and refill with water.
      d. Disconnect water supply.
      e. Test and inspect joints for leaks.
      f. Option: Test ductile-iron piping according to AWWA C600, "Hydrostatic Testing" Section. Use test pressure of at least 10 psig.
   6. Air Tests: Test sanitary sewerage according to requirements of authorities having jurisdiction, UNI-B-6, and the following:
      a. Option: Test plastic gravity sewer piping according to ASTM F 1417.
      b. Option: Test concrete gravity sewer piping according to ASTM C 924.
   7. Force Main: Perform hydrostatic test after thrust blocks, supports, and anchors have hardened. Test at pressure not less than 1-1/2 times the maximum system operating pressure, but not less than 150 psig.
      a. Ductile-Iron Piping: Test according to AWWA C600, "Hydraulic Testing" Section.
      b. PVC Piping: Test according to AWWA M23, "Testing and Maintenance" Chapter.
   8. Manholes: Perform hydraulic test according to ASTM C 969.

C. Leaks and loss in test pressure constitute defects that must be repaired.

D. Replace leaking piping using new materials, and repeat testing until leakage is within allowances specified.

3.13 CLEANING

A. Clean interior of piping of dirt and superfluous material. Flush with potable water.

END OF SECTION 33 30 00

SECTION 33 41 00

STORM UTILITY DRAINAGE PIPING

PART 1 GENERAL

1.01 RELATED DOCUMENTS

A. Drawings and general provisions of the Contract, including General and Supplementary Conditions and Division 01 Specification Sections, apply to this Section.

1.02 SUMMARY

A. This Section includes gravity-flow, non-pressure storm drainage outside the building, with the following components:

1. Special fittings for expansion and deflection.
2. Backwater valves.
3. Cleanouts.
4. Drains.
5. Corrosion-protection piping encasement.
6. Precast concrete manholes.

1.03 DEFINITIONS

A. ABS: Acrylonitrile-butadiene-styrene plastic.

B. EPDM: Ethylene-propylene-diene-monomer rubber.

C. LLDPE: Linear low-density, polyethylene plastic.

D. HDPE: High Density Polyethylene plastic.

E. PP: Polypropylene plastic.

F. PVC: Polyvinyl chloride plastic.

G. TPE: Thermoplastic elastomer.

1.04 PERFORMANCE REQUIREMENTS

A. Gravity-Flow, Non-pressure, Drainage-Piping Pressure Rating: 10-foot head of water. Pipe joints shall be at least silttight, unless otherwise indicated.

1.05 SUBMITTALS

A. Product Data: For the following:

1. Special pipe fittings.
2. Drains.
3. Channel drainage systems.
4. Storage and leaching chambers.

B. Shop Drawings: For the following:

1. Manholes: Include plans, elevations, sections, details, and frames and covers.
2. Catch Basins and Stormwater Inlets. Include plans, elevations, sections, details, and frames, covers, and grates.
3. Stormwater Detention Structures: Include plans, elevations, sections, details, frames and covers, design calculations, and concrete design-mix report.

C. Coordination Drawings: Show pipe sizes, locations, and elevations. Show other piping in same trench and clearances from storm drainage system piping. Indicate interface and spatial relationship between manholes, piping, and proximate structures.

D. Profile Drawings: Show system piping in elevation. Draw profiles at horizontal scale of not less than 1 inch equals 50 feet and vertical scale of not less than 1 inch equals 5 feet.

Indicate manholes and piping. Show types, sizes, materials, and elevations of other utilities crossing system piping.

E. Field quality-control test reports.

1.06 DELIVERY, STORAGE, AND HANDLING

A. Do not store plastic manholes, pipe, and fittings in direct sunlight.

B. Protect pipe, pipe fittings, and seals from dirt and damage.

C. Handle manholes according to manufacturer's written rigging instructions.

D. Handle catch basins and stormwater inlets according to manufacturer's written rigging instructions.

1.07 PROJECT CONDITIONS

A. Interruption of Existing Storm Drainage Service: Do not interrupt service to facilities occupied by Owner or others unless permitted under the following conditions and then only after arranging to provide temporary service according to requirements indicated:

1. Notify Owner no fewer than two days in advance of proposed interruption of service.

2. Do not proceed with interruption of service without Owner's written permission.

PART 2 PRODUCTS

2.01 PIPING MATERIALS

A. Refer to Part 3 "Piping Applications" Article for applications of pipe, fitting, and joining materials.

2.02 DUCTILE-IRON CULVERT PIPE AND FITTINGS

A. Pipe: ASTM A 716, for push-on joints.

B. Standard Fittings: AWWA C110, ductile or gray iron, for push-on joints.

C. Compact Fittings: AWWA C153, for push-on joints.

D. Gaskets: AWWA C111, rubber.

2.03 STEEL PIPE AND FITTINGS

A. Corrugated-Steel Pipe and Fittings: ASTM A 760, Type I with fittings of similar form and construction as pipe.

1. Special-Joint Bands: Corrugated steel with O-ring seals.

2. Standard-Joint Bands: Corrugated steel.

3. Coating: Aluminum, Zinc.

2.04 ALUMINUM PIPE AND FITTINGS

A. Corrugated Aluminum Pipe and Fittings: ASTM B 745, Type I with fittings of similar form and construction as pipe.

1. Special-Joint Bands: Corrugated steel with O-ring seals.

2. Standard-Joint Bands: Corrugated steel.

2.05 HDPE PIPE AND FITTINGS

A. Corrugated HDPE Drainage Pipe and Fittings NPS 10 and Smaller: AASHTO M 252M, Type S, with smooth waterway for coupling joints.

1. Silttight Couplings: HDPE sleeve with ASTM D 1056, Type 2, Class A, Grade 2 gasket material that mates with tube and fittings.

2. Soiltight Couplings: AASHTO M 252M, corrugated, matching tube and fittings.

B. Corrugated HDPE Pipe and Fittings NPS 12 to NPS 48: AASHTO M 294M, Type S, with smooth waterway for coupling joints.

1. Silttight Couplings: HDPE sleeve with ASTM D 1056, Type 2, Class A, Grade 2 gasket material that mates with pipe and fittings.

2. Soiltight Couplings: AASHTO M 294M, corrugated, matching pipe and fittings.

C. Corrugated HDPE Pipe and Fittings NPS 56 and NPS 60: AASHTO MP7, Type S, with smooth waterway for coupling joints.

1. Silttight Couplings: HDPE sleeve with ASTM D 1056, Type 2, Class A, Grade 2 gasket material that mates with pipe and fittings.
2. Soiltight Couplings: AASHTO MP7, corrugated, matching pipe and fittings.

2.06 PVC PIPE AND FITTINGS

A. PVC Cellular-Core Pipe and Fittings: ASTM F 891, Sewer and Drain Series, PS 50 minimum stiffness pipe with ASTM D 3034, SDR 35, socket-type fittings for solvent-cemented joints.

B. PVC Sewer Pipe and Fittings, NPS 15 and Smaller: ASTM D 3034, SDR 35, with bell-and-spigot ends for gasketed joints with ASTM F 477, elastomeric seals.

C. PVC Sewer Pipe and Fittings, NPS 18 and Larger: ASTM F 679, T-2 wall thickness, with bell-and-spigot ends for gasketed joints with ASTM F 477, elastomeric seals.

D. PVC Profile Gravity Sewer Pipe and Fittings: ASTM F 794 pipe, with bell-and-spigot ends; ASTM D 3034 fittings, with bell ends; and ASTM F 477, elastomeric seals.

2.07 CONCRETE PIPE AND FITTINGS

A. Non-reinforced-Concrete Sewer Pipe and Fittings: ASTM C 14, Class 2, with bell-and-spigot or groove and tongue ends and gasketed joints with ASTM C 443, rubber gaskets sealant joints with ASTM C 990, bitumen or butyl-rubber sealant.

B. Reinforced-Concrete Sewer Pipe and Fittings: ASTM C 76, with bell-and-spigot or groove and tongue ends and gasketed joints with ASTM C 443, rubber gaskets sealant joints with ASTM C 990, bitumen or butyl-rubber sealant.

1. Class I, Wall B.
2. Class II, Wall B.
3. Class III, Wall B.
4. Class IV, Wall B.
5. Class V, Wall B.

2.08 NON-PRESSURE-TYPE PIPE COUPLINGS

A. Comply with ASTM C 1173, elastomeric, sleeve-type, reducing or transition coupling, for joining underground non-pressure piping. Include ends of same sizes as piping to be joined, and corrosion-resistant-metal tension band and tightening mechanism on each end.

B. Sleeve Materials:

1. For Concrete Pipes: ASTM C 443, rubber.
2. For Plastic Pipes: ASTM F 477, elastomeric seal or ASTM D 5926, PVC.
3. For Dissimilar Pipes: ASTM D 5926, PVC or other material compatible with pipe materials being joined.

C. Unshielded Flexible Couplings: Elastomeric sleeve with stainless-steel shear ring and corrosion-resistant-metal tension band and tightening mechanism on each end.

D. Shielded Flexible Couplings: ASTM C 1460, elastomeric or rubber sleeve with full-length, corrosion-resistant outer shield and corrosion-resistant-metal tension band and tightening mechanism on each end.

E. Ring-Type Flexible Couplings: Elastomeric compression seal with dimensions to fit inside bell of larger pipe and for spigot of smaller pipe to fit inside ring.

F. Non-pressure-Type Rigid Couplings: ASTM C 1461, sleeve-type reducing- or transition-type mechanical coupling molded from ASTM C 1440, TPE material with corrosion-resistant-metal tension band and tightening mechanism on each end.

2.09 SPECIAL PIPE FITTINGS

A. Ductile-Iron Flexible Expansion Joints: Compound fitting with combination of flanged and mechanical-joint ends complying with AWWA C110 or AWWA C153. Include 2 gasketed ball-

joint sections and 1 or more gasketed sleeve sections, rated for 250-psig minimum working pressure and for offset and expansion indicated.

B. Ductile-Iron Deflection Fittings: Compound coupling fitting with ball joint, flexing section, gaskets, and restrained-joint ends complying with AWWA C110 or AWWA C153. Include rating for 250-psig minimum working pressure and for up to 15 degrees of deflection.

C. Ductile-Iron Expansion Joints: Three-piece assembly of telescoping sleeve with gaskets and restrained-type, ductile-iron or steel with protective coating, bell-and-spigot end sections complying with AWWA C110 or AWWA C153. Include rating for 250-psig minimum working pressure and for expansion indicated.

2.10 CLEANOUTS

A. Gray-Iron Cleanouts: ASME A112.36.2M, round, gray-iron housing with clamping device and round, secured, scoriated, gray-iron cover. Include gray-iron ferrule with inside calk or spigot connection and countersunk, tapered-thread, brass closure plug.

1. Top-Loading Classification(s): Heavy duty.
2. Sewer Pipe Fitting and Riser to Cleanout: ASTM A 74, Service class, cast-iron soil pipe and fittings.

B. PVC Cleanouts: PVC body with PVC threaded plug. Include PVC sewer pipe fitting and riser to cleanout of same material as sewer piping.

2.11 DRAINS

A. Gray-Iron Area Drains: ASME A112.21.1M, round body with anchor flange and round secured grate. Include bottom outlet with inside calk or spigot connection, of sizes indicated.

1. Top-Loading Classification(s): Heavy duty.

2.12 CORROSION-PROTECTION PIPING ENCASEMENT

A. Encasement for Underground Metal Piping: ASTM A 674 or AWWA C105.

1. Form: Sheet or tube.
2. Material: LLDPE film of 0.008-inch minimum thickness.
3. Material: LLDPE film of 0.008-inch minimum thickness or high-density, crosslaminated PE film of 0.004-inch minimum thickness.
4. Material: High-density, cross-laminated PE film of 0.004-inch minimum thickness.
5. Color: Black, Natural.

2.13 MANHOLES

A. Standard Precast Concrete Manholes: ASTM C 478, precast, reinforced concrete, of depth indicated, with provision for sealant joints.

1. Diameter: 48 inches minimum, unless otherwise indicated.
2. Ballast: Increase thickness of precast concrete sections or add concrete to base section, as required to prevent flotation.
3. Base Section: 6-inch minimum thickness for floor slab and 5-inch minimum thickness for walls and base riser section, and having separate base slab or base section with integral floor.
4. Riser Sections: 5-inch minimum thickness, and lengths to provide depth indicated.
5. Top Section: Eccentric-cone type unless concentric-cone or flat-slab-top type is indicated. Top of cone of size that matches grade rings.
6. Joint Sealant: ASTM C 990, bitumen or butyl rubber.
7. Resilient Pipe Connectors: ASTM C 923, cast or fitted into manhole walls, for each pipe connection.
8. Steps: Individual FRP steps, FRP ladder, or ASTM A 615/A 615M, deformed, 1/2-inch steel reinforcing rods encased in ASTM D 4101, PP; ASTM A 615, deformed, 1/2-inch steel reinforcing rods encased in ASTM D 4101, PP,, wide enough to allow worker to place both feet on 1 step and designed to prevent lateral slippage off of step. Cast or

anchor steps into sidewalls at 12- to 16-inch intervals. Omit steps if total depth from floor of manhole to finished grade is less than 60 inches.

9. Adjusting Rings: Interlocking rings with level or sloped edge in thickness and diameter matching manhole frame and cover. Include sealant recommended by ring manufacturer.
10. Grade Rings: Reinforced-concrete rings, 6- to 9-inch total thickness, to match diameter of manhole frame and cover.
11. Protective Coating: Plant-applied, SSPC-Paint 16, coal-tar, epoxy-polyamide paint; 10-mil minimum thickness applied to exterior and interior surfaces.
12. Manhole Frames and Covers: Ferrous; 24-inch ID by 7- to 9-inch riser with 4-inch-minimum width flange and 26-inch- diameter cover. Include indented top design with lettering cast into cover, using wording equivalent to "STORM SEWER."
    a. Material: ASTM A 536, Grade 60-40-18 ductile; ASTM A 48, Class 35 gray iron, unless otherwise indicated.
    b. Protective Coating: Foundry-applied, SSPC-Paint 16, coal-tar, epoxy-polyamide paint; 10-mil minimum thickness applied to all surfaces, unless otherwise indicated.

B. Designed Precast Concrete Manholes: ASTM C 913; designed according to ASTM C 890 for A-16 (ASSHTO HS20-44), heavy-traffic, structural loading; of depth, shape, and dimensions indicated, with provision for sealant joints.

1. Ballast: Increase thickness of one or more precast concrete sections or add concrete to manhole, as required to prevent flotation.
2. Joint Sealant: ASTM C 990, bitumen or butyl rubber.
3. Resilient Pipe Connectors: ASTM C 923, cast or fitted into manhole walls, for each pipe connection.
4. Steps: Individual FRP steps, FRP ladder, or ASTM A 615, deformed, 1/2-inch steel reinforcing rods encased in ASTM D 4101, PP; ASTM A 615, deformed, 1/2-inch steel reinforcing rods encased in ASTM D 4101, PP, wide enough to allow worker to place both feet on 1 step and designed to prevent lateral slippage off of step. Cast or anchor steps into sidewalls at 12- to 16-inch intervals. Omit steps if total depth from floor of manhole to finished grade is less than 60 inches.
5. Adjusting Rings: Interlocking rings with level or sloped edge in thickness and diameter matching manhole frame and cover. Include sealant recommended by ring manufacturer.
6. Grade Rings: Reinforced-concrete rings, 6- to 9-inch total thickness, to match diameter of manhole frame and cover.
7. Protective Coating: Plant-applied, SSPC-Paint 16, coal-tar, epoxy-polyamide paint; 10-mil minimum thickness applied to exterior and interior surfaces.
8. Manhole Frames and Covers: Ferrous; 24-inch ID by 7- to 9-inch riser with 4-inch-minimum width flange and 26-inch- diameter cover. Include indented top design with lettering cast into cover, using wording equivalent to "STORM SEWER."
    a. Material: ASTM A 536, Grade 60-40-18 ductile; ASTM A 48, Class 35 gray iron, unless otherwise indicated.
    b. Protective Coating: Foundry-applied, SSPC-Paint 16, coal-tar, epoxy-polyamide paint; 10-mil minimum thickness applied to all surfaces, unless otherwise indicated.

C. Cast-in-Place Concrete Manholes: Construct of reinforced-concrete bottom, walls, and top; designed according to ASTM C 890 for A-16 (ASSHTO HS20-44), heavy-traffic, structural loading; of depth, shape, dimensions, and appurtenances indicated.

1. Ballast: Increase thickness of concrete, as required to prevent flotation.
2. Resilient Pipe Connectors: ASTM C 923, cast or fitted into manhole walls, for each pipe connection.

3. Steps: Individual FRP steps, FRP ladder, or ASTM A 615, deformed, 1/2-inch steel reinforcing rods encased in ASTM D 4101, PP; ASTM A 615, deformed, 1/2-inch steel reinforcing rods encased in ASTM D 4101, PP, wide enough to allow worker to place both feet on 1 step and designed to prevent lateral slippage off of step. Cast or anchor steps into sidewalls at 12- to 16-inch intervals. Omit steps if total depth from floor of manhole to finished grade is less than 60 inches.
4. Adjusting Rings: Interlocking rings with level or sloped edge in thickness and diameter matching manhole frame and cover. Include sealant recommended by ring manufacturer.
5. Grade Rings: Reinforced-concrete rings, 6- to 9-inch total thickness, to match diameter of manhole frame and cover.
6. Manhole Frames and Covers: Ferrous; 24-inch ID by 7- to 9-inch riser with 4-inch-minimum width flange and 26-inch- diameter cover. Include indented top design with lettering cast into cover, using wording equivalent to "STORM SEWER."
   a. Material: ASTM A 536, Grade 60-40-18 ductile; ASTM A 48, Class 35 gray iron, unless otherwise indicated.
   b. Protective Coating: Foundry-applied, SSPC-Paint 16, coal-tar, epoxy-polyamide paint; 10-mil minimum thickness applied to all surfaces, unless otherwise indicated.

2.14 CONCRETE

A. General: Cast-in-place concrete according to ACI 318/318R, ACI 350R, and the following:
   1. Cement: ASTM C 150, Type II.
   2. Fine Aggregate: ASTM C 33, sand.
   3. Coarse Aggregate: ASTM C 33, crushed gravel.
   4. Water: Potable.

B. Portland Cement Design Mix: 4000 psi minimum, with 0.45 maximum water-cementitious materials ratio.
   1. Reinforcement Fabric: ASTM A 185, steel, welded wire fabric, plain.
   2. Reinforcement Bars: ASTM A 615, Grade 60, deformed steel.

C. Ballast and Pipe Supports: Portland cement design mix, 3000 psi minimum, with 0.58 maximum water-cementitious materials ratio.
   1. Reinforcement Fabric: ASTM A 185, steel, welded wire fabric, plain.
   2. Reinforcement Bars: ASTM A 615, Grade 60, deformed steel.

2.15 CATCH BASINS

A. Standard Precast Concrete Catch Basins: ASTM C 478, precast, reinforced concrete, of depth indicated, with provision for sealant joints.
   1. Base Section: 6-inch minimum thickness for floor slab and 5-inch minimum thickness for walls and base riser section, and having separate base slab or base section with integral floor.
   2. Riser Sections: 5-inch minimum thickness, 48-inch diameter, and lengths to provide depth indicated.
   3. Top Section: Eccentric-cone type unless concentric-cone or flat-slab-top type is indicated. Top of cone of size that matches grade rings.
   4. Joint Sealant: ASTM C 990, bitumen or butyl rubber.
   5. Adjusting Rings: Interlocking rings with level or sloped edge in thickness and shape matching catch basin frame and grate. Include sealant recommended by ring manufacturer.
   6. Grade Rings: Include 2 or 3 reinforced-concrete rings, of 6- to 9-inch total thickness, that match 24-inch- diameter frame and grate.

7. Steps: Individual FRP steps, FRP ladder, or ASTM A 615, deformed, 1/2-inch steel reinforcing rods encased in ASTM D 4101, PP; ASTM A 615, deformed, 1/2-inch steel reinforcing rods encased in ASTM D 4101, PP,, wide enough to allow worker to place both feet on 1 step and designed to prevent lateral slippage off of step. Cast or anchor steps into sidewalls at 12- to 16-inch intervals. Omit steps if total depth from floor of catch basin to finished grade is less than 60 inches.
8. Pipe Connectors: ASTM C 923, resilient, of size required, for each pipe connecting to base section.

B. Designed Precast Concrete Catch Basins: ASTM C 913, precast, reinforced concrete; designed according to ASTM C 890 for A-16 (ASSHTO HS20-44), heavy-traffic, structural loading; of depth, shape, and dimensions indicated, with provision for sealant joints.
1. Joint Sealants: ASTM C 990, bitumen or butyl rubber.
2. Adjusting Rings: Interlocking rings with level or sloped edge in thickness and shape matching catch basin frame and grate. Include sealant recommended by ring manufacturer.
3. Grade Rings: Include 2 or 3 reinforced-concrete rings, of 6- to 9-inch total thickness, that match 24-inch- diameter frame and grate.
4. Steps: Individual FRP steps, FRP ladder, or ASTM A 615, deformed, 1/2-inch steel reinforcing rods encased in ASTM D 4101, PP; ASTM A 615, deformed, 1/2-inch steel reinforcing rods encased in ASTM D 4101, PP,, wide enough to allow worker to place both feet on 1 step and designed to prevent lateral slippage off of step. Cast or anchor steps into sidewalls at 12- to 16-inch intervals. Omit steps if total depth from floor of catch basin to finished grade is less than 60 inches.
5. Pipe Connectors: ASTM C 923, resilient, of size required, for each pipe connecting to base section.

C. Cast-in-Place Concrete, Catch Basins: Construct of reinforced concrete; designed according to ASTM C 890 for structural loading; of depth, shape, dimensions, and appurtenances indicated.
1. Bottom, Walls, and Top: Reinforced concrete.
2. Channels and Benches: Concrete.
3. Steps: Individual FRP steps, FRP ladder, or ASTM A 615, deformed, 1/2-inch steel reinforcing rods encased in ASTM D 4101, PP; ASTM A 615, deformed, 1/2-inch steel reinforcing rods encased in ASTM D 4101, PP, wide enough to allow worker to place both feet on 1 step and designed to prevent lateral slippage off of step. Cast or anchor steps into sidewalls at 12- to 16-inch intervals. Omit steps if total depth from floor of catch basin to finished grade is less than 60 inches.

D. Frames and Grates: ASTM A 536, Grade 60-40-18, ductile iron designed for A-16, structural loading. Include flat grate with small square or short-slotted drainage openings.
1. Size: 24 by 24 inches minimum, unless otherwise indicated.
2. Grate Free Area: Approximately 50 percent, unless otherwise indicated.

E. Frames and Grates: ASTM A 536, Grade 60-40-18, ductile iron designed for A-16, structural loading. Include 24-inch ID by 7- to 9-inch riser with 4-inch minimum width flange, and 26-inch- diameter flat grate with small square or short-slotted drainage openings.
1. Grate Free Area: Approximately 50 percent, unless otherwise indicated.

2.16 STORMWATER INLETS

A. Curb Inlets: Made with vertical curb opening, of materials and dimensions according to utility standards.

B. Gutter Inlets: Made with horizontal gutter opening, of materials and dimensions according to utility standards. Include heavy-duty frames and grates.

C. Combination Inlets: Made with vertical curb and horizontal gutter openings, of materials and dimensions according to utility standards. Include heavy-duty frames and grates.

D. Frames and Grates: Heavy-duty frames and grates according to utility standards.

E. Curb Inlets: Vertical curb opening, of materials and dimensions indicated.

F. Gutter Inlets: Horizontal gutter opening, of materials and dimensions indicated. Include heavy-duty frames and grates.

G. Combination Inlets: Vertical curb and horizontal gutter openings, of materials and dimensions indicated. Include heavy-duty frames and grates.

H. Frames and Grates: Dimensions, opening pattern, free area, and other attributes indicated.

2.17 PIPE OUTLETS

A. Head Walls: Cast-in-place reinforced concrete, with apron and tapered sides.

B. Riprap Basins: Broken, irregular size and shape, graded stone according to NSSGA's "Quarried Stone for Erosion and Sediment Control."

1. Average Size: NSSGA No. R-3, screen opening 2 inches.
2. Average Size: NSSGA No. R-4, screen opening 3 inches.
3. Average Size: NSSGA No. R-5, screen opening 5 inches.

C. Filter Stone: According to NSSGA's "Quarried Stone for Erosion and Sediment Control," No. FS-2, No. 4 screen opening, average-size, graded stone.

D. Energy Dissipaters: According to NSSGA's "Quarried Stone for Erosion and Sediment Control," No. A-1, 3-ton average weight armor stone, unless otherwise indicated.

2.18 MISCELLANEOUS MATERIALS

A. Paint: SSPC-Paint 16.

B. PE Sheeting: ASTM D 4397, with at least 8-mil thickness or other equivalent, impervious material.

PART 3 EXECUTION

3.01 EARTHWORK

A. Excavation, trenching, and backfilling are specified in Division 31 Section "Earth Moving."

3.02 PIPING APPLICATIONS

A. Pipe couplings and special pipe fittings with pressure ratings at least equal to piping rating may be used in applications below, unless otherwise indicated.

1. Use non-pressure-type flexible couplings where required to join gravity-flow, non-pressure sewer piping, unless otherwise indicated.
   a. Unshielded flexible or rigid couplings for same or minor difference OD pipes.
   b. Unshielded, increaser/reducer-pattern, flexible or rigid couplings for pipes with different OD.
   c. Ring-type flexible couplings for piping of different sizes where annular space between smaller piping's OD and larger piping's ID permits installation.

B. Special Pipe Fittings: Use for pipe expansion and deflection. Pipe couplings and special pipe fittings with pressure ratings at least equal to piping rating may be used in applications below, unless otherwise indicated.

C. Gravity-Flow, Non-pressure Sewer Piping: Use any of the following pipe materials for each size range:

1. NPS 3: NPS 4 corrugated steel pipe and fittings, standard-joint bands, and banded joints.
2. NPS 3: NPS 4 corrugated aluminum pipe and fittings, standard-joint bands, and banded joints.
3. NPS 3: ABS, SDR 35, sewer pipe and fittings; gaskets; and gasketed joints.
4. NPS 3: Corrugated PE drainage pipe and fittings, silttight couplings, and coupled joints.
5. NPS 3: NPS 4 PVC sewer pipe and fittings; gaskets; and gasketed joints.

6. NPS 3: NPS 4 Class 2, non-reinforced-concrete sewer pipe and fittings, gaskets, and gasketed joints.
7. NPS 4 and NPS 6: Corrugated steel pipe and fittings, standard-joint bands, and banded joints.
8. NPS 4 and NPS 6: Corrugated aluminum pipe and fittings, standard-joint bands, and banded joints.
9. NPS 4 and NPS 6: ABS, SDR 35, sewer pipe and fittings; gaskets; and gasketed joints.
10. NPS 4 and NPS 6: Corrugated PE drainage pipe and fittings, silttight couplings, and coupled joints.
11. NPS 4 and NPS 6: Cellular-core PVC pipe, PVC sewer pipe fittings, and solvent-cemented joints.
12. NPS 4 and NPS 6: PVC sewer pipe and fittings, gaskets, and gasketed joints.
13. NPS 4 and NPS 6: Class 2, non-reinforced-concrete sewer pipe and fittings, gaskets, and gasketed joints.
14. NPS 8 to NPS 12: NPS 14 ductile-iron culvert pipe, ductile-iron standard or compact fittings, gaskets, and gasketed joints.
15. NPS 8 to NPS 12: Corrugated steel pipe and fittings, standard-joint bands, and banded joints.
16. NPS 8 to NPS 12: Corrugated aluminum pipe and fittings, standard-joint bands, and banded joints.
17. NPS 8 to NPS 12: ABS, SDR 42, sewer pipe and fittings; gaskets, and gasketed joints.
18. NPS 8 to NPS 12: Corrugated PE drainage pipe and fittings in NPS 8 and NPS 10 and corrugated PE pipe and fittings in NPS 12, silttight couplings, and coupled joints.
19. NPS 8 to NPS 12: Cellular-core PVC pipe, PVC sewer pipe fittings, and solvent-cemented joints.
20. NPS 8 to NPS 12: PVC sewer pipe and fittings, gaskets, and gasketed joints.
21. NPS 8 to NPS 12: PVC profile gravity sewer pipe and fittings, gaskets, and gasketed joints.
22. NPS 8 to NPS 12: Non-reinforced-concrete sewer pipe and fittings, gaskets, and gasketed joints.
23. NPS 8 to NPS 12: NPS 12 reinforced-concrete sewer pipe and fittings, gaskets, and gasketed joints.
24. NPS 15: NPS 16 ductile-iron culvert pipe, ductile-iron standard or compact fittings, gaskets, and gasketed joints.
25. NPS 15: Corrugated steel pipe and fittings, standard-joint bands, and banded joints.
26. NPS 15: Corrugated aluminum pipe and fittings, standard-joint bands, and banded joints.
27. NPS 15: Corrugated PE pipe and fittings, silttight couplings, and coupled joints.
28. NPS 15: PVC sewer pipe and fittings, gaskets, and gasketed joints.
29. NPS 15: PVC profile gravity sewer pipe and fittings, gaskets, and gasketed joints.
30. NPS 15: Non-reinforced-concrete sewer pipe and fittings, gaskets, and gasketed joints.
31. NPS 15: Reinforced-concrete sewer pipe and fittings, gaskets, and gasketed joints.
32. NPS 18 to NPS 36: Ductile-iron culvert pipe, ductile-iron standard or compact fittings, gaskets, and gasketed joints.
33. NPS 18 to NPS 36: Corrugated steel pipe and fittings, standard-joint bands, and banded joints.
34. NPS 18 to NPS 36: Corrugated aluminum pipe and fittings, standard-joint bands, and banded joints.

35. NPS 18 to NPS 36: Corrugated PE pipe and fittings, silttight couplings, and coupled joints.
36. NPS 18 to NPS 36: PVC sewer pipe and fittings, gaskets, and gasketed joints.
37. NPS 18 to NPS 36: PVC profile gravity sewer pipe and fittings, gaskets, and gasketed joints.
38. NPS 18 to NPS 36: Non-reinforced-concrete sewer pipe and fittings, gaskets, and gasketed joints.
39. NPS 18 to NPS 36: Reinforced-concrete sewer pipe and fittings, gaskets, and gasketed joints.

3.03 PIPING INSTALLATION

A. General Locations and Arrangements: Drawing plans and details indicate general location and arrangement of underground storm drainage piping. Location and arrangement of piping layout take design considerations into account. Install piping as indicated, to extent practical. Where specific installation is not indicated, follow piping manufacturer's written instructions.

B. Install piping beginning at low point, true to grades and alignment indicated with unbroken continuity of invert. Place bell ends of piping facing upstream. Install gaskets, seals, sleeves, and couplings according to manufacturer's written instructions for use of lubricants, cements, and other installation requirements.

C. Install manholes for changes in direction unless fittings are indicated. Use fittings for branch connections unless direct tap into existing sewer is indicated.

D. Install proper size increasers, reducers, and couplings where different sizes or materials of pipes and fittings are connected. Reducing size of piping in direction of flow is prohibited.

E. Tunneling: Install pipe under streets or other obstructions that cannot be disturbed by tunneling, jacking, or a combination of both.

F. Install gravity-flow, non-pressure drainage piping according to the following:

1. Install piping pitched down in direction of flow, at minimum slope of 1 percent, unless otherwise indicated.
2. Install piping NPS 6and larger with restrained joints at tee fittings and at changes in direction. Use corrosion-resistant rods, pipe or fitting manufacturer's proprietary restraint system, or cast-in-place concrete supports or anchors.
3. Install piping with 36-inch minimum cover.
4. Install piping below frost line.
5. Install ductile-iron culvert piping according to ASTM A 716.
6. Install ductile-iron and special fittings according to AWWA C600 or AWWA M41.
7. Install corrugated steel piping according to ASTM A 798.
8. Install corrugated aluminum piping according to ASTM B 788.
9. Install ABS sewer piping according to ASTM D 2321 and ASTM F 1668.
10. Install PE corrugated sewer piping according to CPPA's "Recommended Installation Practices for Corrugated Polyethylene Pipe and Fittings."
11. Install PVC cellular-core piping according to ASTM D 2321 and ASTM F 1668.
12. Install PVC sewer piping according to ASTM D 2321 and ASTM F 1668.
13. Install PVC profile gravity sewer piping according to ASTM D 2321 and ASTM F 1668.
14. Install non-reinforced-concrete sewer piping according to ASTM C 1479 and ACPA's "Concrete Pipe Installation Manual."
15. Install reinforced-concrete sewer piping according to ASTM C 1479 and ACPA's "Concrete Pipe Installation Manual."

G. Install corrosion-protection piping encasement over the following underground metal piping according to ASTM A 674 or AWWA C105:

1. Ductile-iron pipe and fittings.

2. Special pipe fittings.

3.04 PIPE JOINT CONSTRUCTION

A. Basic pipe joint construction is specified in Division 33 Section "Common Work Results for Utilities." Where specific joint construction is not indicated, follow piping manufacturer's written instructions.

B. Join gravity-flow, non-pressure drainage piping according to the following:

1. Join ductile-iron culvert piping according to AWWA C600 for push-on joints.
2. Join ductile-iron and special fittings according to AWWA C600 or AWWA M41.
3. Join corrugated steel sewer piping according to ASTM A 798/A 798M.
4. Join corrugated aluminum sewer piping according to ASTM B 788/B 788M.
5. Join ABS sewer piping according to ASTM D 2321 and ASTM D 2751 for elastomeric-seal joints.
6. Join corrugated PE piping according to CPPA 100 and the following:
   a. Use silttight couplings for Type 1, silttight joints.
   b. Use soiltight couplings for Type 2, soiltight joints.
7. Join PVC cellular-core piping according to ASTM D 2321 and ASTM F 891 for solvent-cement joints.
8. Join PVC sewer piping according to ASTM D 2321 and ASTM D 3034 for elastomeric-seal joints or ASTM D 3034 for elastomeric gasket joints.
9. Join PVC profile gravity sewer piping according to ASTM D 2321 for elastomeric-seal joints or ASTM F 794 for gasketed joints.
10. Join non-reinforced-concrete sewer piping according to ASTM C 14 and ACPA's "Concrete Pipe Installation Manual" for rubber-gasket joints.
11. Join reinforced-concrete sewer piping according to ACPA's "Concrete Pipe Installation Manual" for rubber-gasket joints.
12. Join dissimilar pipe materials with non-pressure-type flexible or rigid couplings.

C. Join dissimilar pipe materials with pressure-type couplings.

3.05 CLEANOUT INSTALLATION

A. Install cleanouts and riser extension from sewer pipe to cleanout at grade. Use cast-iron soil pipe fittings in sewer pipes at branches for cleanouts and cast-iron soil pipe for riser extensions to cleanouts. Install piping so cleanouts open in direction of flow in sewer pipe.

1. Use light-duty, top-loading classification cleanouts in earth or unpaved foot-traffic areas.
2. Use medium-duty, top-loading classification cleanouts in paved foot-traffic areas.
3. Use heavy-duty, top-loading classification cleanouts in vehicle-traffic service areas.
4. Use extra-heavy-duty, top-loading classification cleanouts in roads areas.

B. Set cleanout frames and covers in earth in cast-in-place concrete block, 24 by 24 by 12 inches deep. Set with tops 1 inch above surrounding earth grade.

C. Set cleanout frames and covers in earth on prepared, compacted stone. Frames shall be centered on pipe. Set top flush with surrounding grade.

D. Set cleanout frames and covers in concrete pavement with tops flush with pavement surface.

3.06 DRAIN INSTALLATION

A. Install type of drains in locations indicated.

1. Use light-duty, top-loading classification drains in earth or unpaved foot-traffic areas.
2. Use medium-duty, top-loading classification drains in paved foot-traffic areas.
3. Use heavy-duty, top-loading classification drains in vehicle-traffic service areas.
4. Use extra-heavy-duty, top-loading classification drains in roads areas.

B. Embed drains in 4-inch minimum depth of concrete around bottom and sides.

C. Fasten grates to drains if indicated.

D. Set drain frames and covers with tops flush with pavement surface.

E. Assemble trench sections with flanged joints.

F. Embed trench sections in 4-inch minimum concrete around bottom and sides.

3.07 MANHOLE INSTALLATION

A. General: Install manholes, complete with appurtenances and accessories indicated.

B. Install precast concrete manhole sections according to ASTM C 891.

C. Construct cast-in-place manholes as indicated.

D. Install PE sheeting on earth where cast-in-place-concrete manholes are to be built.

E. Set tops of frames and covers flush with finished surface of manholes that occur in pavements. Set tops 3 inches above finished surface elsewhere, unless otherwise indicated.

3.08 CATCH BASIN INSTALLATION

A. Construct catch basins to sizes and shapes indicated.

B. Set frames and grates to elevations indicated.

3.09 STORMWATER INLET INSTALLATION

A. Construct inlet head walls, aprons, and sides of reinforced concrete, as indicated.

B. Construct riprap of broken stone, as indicated.

C. Install outlets that spill onto grade, anchored with concrete, where indicated.

D. Install outlets that spill onto grade, with flared end sections that match pipe, where indicated.

E. Construct energy dissipaters at outlets, as indicated.

3.10 CONCRETE PLACEMENT

A. Place cast-in-place concrete according to ACI 318/318R.

3.11 DRAINAGE SYSTEM INSTALLATION

A. Assemble and install components according to manufacturer's written instructions.

B. Install with top surfaces of components, except piping, flush with finished surface.

C. Assemble channel sections to form slope down toward drain outlets. Use sealants, adhesives, fasteners, and other materials recommended by system manufacturer.

D. Embed channel sections and drainage specialties in 4-inch minimum concrete around bottom and sides.

E. Fasten grates to channel sections if indicated.

F. Assemble channel sections with flanged or interlocking joints.

G. Embed channel sections in 4-inch minimum concrete around bottom and sides.

3.12 CONNECTIONS

A. Connect non-pressure, gravity-flow drainage piping in building's storm building drains specified in Division 22 Section "Facility Storm Drainage Piping."

B. Connect force-main pressure piping to building's storm drainage force mains specified in Division 22 Section "Facility Storm Drainage Piping." Terminate piping where indicated.

1. Use commercially manufactured wye fittings for piping branch connections. Remove section of existing pipe; install wye fitting into existing piping; and encase entire wye fitting, plus 6-inch overlap, with not less than 6 inches of concrete with 28-day compressive strength of 3000 psi.

2. Make branch connections from side into existing piping, NPS 4 to NPS 20. Remove section of existing pipe; install wye fitting into existing piping; and encase entire wye with not less than 6 inches of concrete with 28-day compressive strength of 3000 psi.

3. Make branch connections from side into existing piping, NPS 21 or larger, or to underground manholes and structures by cutting opening into existing unit large enough to allow 3 inches of concrete to be packed around entering connection. Cut end of

connection pipe passing through pipe or structure wall to conform to shape of and be flush with inside wall, unless otherwise indicated. On outside of pipe, manhole, or structure wall, encase entering connection in 6 inches of concrete for minimum length of 12 inches to provide additional support of collar from connection to undisturbed ground.

a. Use concrete that will attain a minimum 28-day compressive strength of 3000 psi, unless otherwise indicated.

b. Use epoxy-bonding compound as interface between new and existing concrete and piping materials.

4. Protect existing piping, manholes, and structures to prevent concrete or debris from entering while making tap connections. Remove debris or other extraneous material that may accumulate.

C. Connect to sediment interceptors specified in Division 22 Section "Sanitary Waste Interceptors."

3.13 CLOSING ABANDONED STORM DRAINAGE SYSTEMS

A. Abandoned Piping: Close open ends of abandoned underground piping indicated to remain in place. Include closures strong enough to withstand hydrostatic and earth pressures that may result after ends of abandoned piping have been closed. Use either procedure below:

1. Close open ends of piping with at least 8-inch- thick, brick masonry bulkheads.

2. Close open ends of piping with threaded metal caps, plastic plugs, or other acceptable methods suitable for size and type of material being closed. Do not use wood plugs.

B. Abandoned Manholes and Structures: Excavate around manholes and structures as required and use one procedure below:

1. Remove manhole or structure and close open ends of remaining piping.

2. Remove top of manhole or structure down to at least 36 inches below final grade. Fill to within 12 inches of top with stone, rubble, gravel, or compacted dirt. Fill to top with concrete.

C. Backfill to grade according to Division 31 Section "Earth Moving."

3.14 PAINTING

A. Clean and prepare concrete manhole surfaces for field painting. Remove loose efflorescence, chalk, dust, grease, oils, and release agents. Roughen surface as required to remove glaze. Paint the following concrete surfaces as recommended by paint manufacturer:

1. Cast-in-Place-Concrete Manholes: All exterior, except bottom and all interior.

2. Precast Concrete Manholes: All exterior and interior.

B. Prepare ferrous frame and cover surfaces according to SSPC-PA 1 and paint according to SSPC-PA 1 and SSPC-Paint 16. Do not paint surfaces with foundry-applied, corrosion-resistant coating.

3.15 IDENTIFICATION

A. Materials and their installation are specified in Division 31 Section "Earth Moving." Arrange for installation of green warning tape directly over piping and at outside edge of underground structures.

1. Use warning tape or detectable warning tape over ferrous piping.

2. Use detectable warning tape over nonferrous piping and over edges of underground structures.

3.16 FIELD QUALITY CONTROL

A. Inspect interior of piping to determine whether line displacement or other damage has occurred. Inspect after approximately 24 inches of backfill is in place, and again at completion of Project.

1. Submit separate reports for each system inspection.

2. Defects requiring correction include the following:

a. Alignment: Less than full diameter of inside of pipe is visible between structures.

b. Deflection: Flexible piping with deflection that prevents passage of ball or cylinder of size not less than 92.5 percent of piping diameter.

c. Crushed, broken, cracked, or otherwise damaged piping.

d. Infiltration: Water leakage into piping.

e. Exfiltration: Water leakage from or around piping.

3. Replace defective piping using new materials, and repeat inspections until defects are within allowances specified.

4. Reinspect and repeat procedure until results are satisfactory.

B. Test new piping systems, and parts of existing systems that have been altered, extended, or repaired, for leaks and defects.

1. Do not enclose, cover, or put into service before inspection and approval.

2. Test completed piping systems according to authorities having jurisdiction.

3. Schedule tests and inspections by authorities having jurisdiction with at least 24 hours' advance notice.

4. Submit separate report for each test.

5. Gravity-Flow Storm Drainage Piping: Test according to requirements of authorities having jurisdiction, UNI-B-6, and the following:

a. Exception: Piping with soiltight joints unless required by authorities having jurisdiction.

b. Option: Test plastic piping according to ASTM F 1417.

c. Option: Test concrete piping according to ASTM C 924.

C. Leaks and loss in test pressure constitute defects that must be repaired.

D. Replace leaking piping using new materials, and repeat testing until leakage is within allowances specified.

3.17 CLEANING

A. Clean interior of piping of dirt and superfluous materials. Flush with potable water.

END OF SECTION 33 41 00

SECTION 33 46 00

SUBDRAINAGE

PART 1 GENERAL

1.01 RELATED DOCUMENTS

A. Drawings and general provisions of the Contract, including General and Supplementary Conditions and Division 01 Specification Sections, apply to this Section.

1.02 SUMMARY

A. Section Includes:

1. Perforated-wall pipe and fittings.
2. Drainage conduits.
3. Drainage panels.
4. Geotextile filter fabrics.

1.03 DEFINITIONS

A. ABS: Acrylonitrile-butadiene-styrene plastic.

B. HDPE: High-density polyethylene plastic.

C. PE: Polyethylene plastic.

D. PP: Polypropylene plastic.

E. PS: Polystyrene plastic.

F. PVC: Polyvinyl chloride plastic.

G. Subdrainage: Drainage system that collects and removes subsurface or seepage water.

H. Post-Consumer content is material generated by households or by commercial, industrial and institutional facilities in their role as end-users of the product which can no longer be used for its intended purpose. This includes returns of materials from the distribution chain (Source: ISO 14021).

I. Pre-Consumer Content, previously referred to as Post-Industrial Content, is defined as material diverted from the waste stream during the manufacturing process. Excluded is reutilization of materials such as rework; regrind or scrap generated in a process and capable of being reclaimed within the same process that generated it (Source ISO 14021).

1.04 ACTION SUBMITTALS

A. Product Data:

1. Perforated wall pipe and fittings.
2. Drainage conduits, including rated capacities.
3. Solid wall pipe and fittings.
4. Geotextile filter fabrics.

PART 2 PRODUCTS

2.01 MANUFACTURERS

A. In other Part 2 articles where titles below introduce lists, the following requirements apply to product selection:

1. Available Products: Subject to compliance with requirements, products that may be incorporated into the Work include, but are not limited to, products specified.

2. Products: Subject to compliance with requirements, provide one of the products specified.

3. Available Manufacturers: Subject to compliance with requirements, manufacturers offering products that may be incorporated into the Work include, but are not limited to, manufacturers specified.

4. Manufacturers: Subject to compliance with requirements, provide products by one of the manufacturers specified.

2.02 PIPING MATERIALS

A. Refer to Piping Applications Article in Part 3 for applications of pipe, tube fitting and joining materials.

2.03 PERFORATED-WALL PIPES AND FITTINGS

A. Perforated PE Pipe and Fittings:

1. NPS 6 and Smaller: ASTM F 405 or AASHTO M 252, Type CP; corrugated, for coupled joints.

2. NPS 8 and Larger: ASTM F 667; AASHTO M 252, Type CP; or AASHTO M 294, Type CP; corrugated; for coupled joints.

3. Couplings: Manufacturer's standard, band type.

B. Perforated PVC Sewer Pipe and Fittings: ASTM D 2729, bell-and-spigot ends, for loose joints.

C. Perforated Concrete Pipe and Fittings: ASTM C 444, Type 1, and applicable requirements in ASTM C 14, Class 2, socket-and-spigot ends for gasketed joints.

1. Gaskets: ASTM C 443, rubber.

2.04 SOLID-WALL PIPES AND FITTINGS

A. ABS Sewer Pipe and Fittings: ASTM D 2751.

1. Solvent Cement: ASTM D 2235.

2. Gaskets: ASTM F 477, elastomeric seal.

B. Cast-Iron Soil Pipe and Fittings: ASTM A 74, Service and Extra-Heavy classes, hub-and-spigot ends, gray, for gasketed joints.

1. Gaskets: AST C 564, rubber, of thickness matching class of pipe.

C. PE Drainage Tubing and Fittings: AASHTO M 252, Type S, corrugated, with smooth waterway, for coupled joints.

1. Couplings: AASHTO M 252, corrugated, band type, matching tubing and fittings.

D. PE Pipe and Fittings: AASHTO M 294, Type S, corrugated, with smooth waterway, for coupled joints.

1. Couplings: AASHTO M 294, corrugated, band type, matching tubing and fittings.

E. PVC Sewer Pipe and Fittings: ASTM D 3034, SDR 35, bell-and-spigot ends, for gasketed joints.

1. Gaskets: ASTM F 477, elastomeric seal.

2.05 SPECIAL PIPE COUPLINGS

A. Comply with ASTM C 1173, elastomeric, sleeve-type, reducing or transition coupling, for joining underground nonpressure piping. Include ends of same sizes as piping to be joined and corrosion-resistant metal tension band and tightening mechanism on each end.

1. Sleeve Materials:
    a. For Concrete Pipes: AST C 443, rubber.
    b. For Cast-Iron Soil Pipes: ASTM C 564, rubber.
    c. For Plastic Pipes: ASTM F 477, elastomeric seal or ASTM D a5926, PVC.
    d. For Dissimilar Pipes: ASTM D 5926, PVC or other material compatible with pipe materials being joined.
2. Unshielded Flexible Couplings: Elastomeric sleeve with stainless-steel shear ring and corrosion-resistant metal tension band and tightening mechanism on each end.
3. Shielded Flexible Couplings: ASTM C 1460, elastomeric or rubber sleeve with full-length, corrosion-resistant outer shield and corrosion-resistant metal tension band and tightening mechanism on each end.

2.06 CLEANOUTS

A. Cast-Iron Cleanouts: ASME A112.36.2M; with round-flanged, cast-iron housing; and secured, scoriated, Medium-Duty Loading class, cast-iron cover. Include cast-iron ferrule and countersunk, brass cleanout plug.

B. Copper-Alloy Cleanouts: ASME A112.36.2M; with round-flanged, cast-iron housing with clamping device; and scoriated, Medium-Duty Loading class, copper-alloy cover. Include countersunk, brass cleanout plug.

C. PVC Cleanouts: ASTM D 3034, PVC cleanout threaded plug and threaded pipe hub.

2.07 DRAINAGE CONDUITS

A. Molded-Sheet Drainage Conduits: Prefabricated geocomposite with cuspated, molded-plastic drainage core wrapped in geotextile filter fabric.
    1. Nominal Size: 12 inches high by approximately 1 inch thick.
        a. Minimum In-Plane Flow: 30 gpm at hydraulic gradient of 1.0 when tested according to ASTM D 4716.
    2. Nominal Size: 18 inches high by approximately 1 inch thick.
        a. Minimum In-Plane Flow: 45 gpm at hydraulic gradient of 1.0 when tested according to ASTM D 4716.
    3. Filter Fabric: PP geotextile.
    4. Fittings: HDPE with combination NPS 4 and NPS 6 outlet connection.

B. Multipipe Drainage Conduits: Prefabricated geocomposite with interconnected, corrugated, perforated-pipe core molded from HDPE complying with ASTM D 1248 and wrapped in geotextile filter fabric.
    1. Nominal Size: 6 inches high by approximately 1-1/4 inches thick.
        a. Minimum In-Plane Flow: 15 gpm at hydraulic gradient of 1.0 when tested according to ASTM D 4716.
    2. Nominal Size: 12 inches high by approximately 1-1/4 inches thick.
        a. Minimum In-Plane Flow: 30 gpm at hydraulic gradient of 1.0 when tested according to ASTM D 4716.
    3. Nominal Size: 18 inches high by approximately 1-1/4 inches thick.
        a. Minimum In-Plane Flow: 45 gpm at hydraulic gradient of 1.0 when tested according to ASTM D 4716.
    4. Filter Fabric: Nonwoven, needle-punched geotextile.

5. Fittings: HDPE with combination NPS 4 and NPS 6 outlet connection.

6. Couplings: HDPE.

C. Single-Pipe Drainage Conduits: Prefabricated geocomposite with perforated corrugated core molded from HDPE complying with ASTM D 3350 and wrapped in geotextile filter fabric.

1. Nominal Size: 12 inches high by approximately 1 inch thick.

a. Minimum In-Plane Flow: 30 gpm at hydraulic gradient of 1.0 when tested according to ASTM D 4716.

2. Nominal Size: 18 inches high by approximately 1 inch thick.

a. Minimum In-Plane Flow: 45 gpm at hydraulic gradient of 1.0 when tested according to ASTM D 4716.

3. Filter Fabric: PP geotextile.

4. Fittings: HDPE with combination NPS 4 and NPS 6 outlet connection.

5. Couplings: Corrugated HDPE band.

D. Mesh Fabric Drainage Conduits: Prefabricated geocomposite with plastic-filament drainage core wrapped in geotextile filter fabric. Include fittings for bends and connection to drainage piping.

1. Nominal Size: 6 inches high by approximately 0.9 inch thick.

a. Minimum In-Plane Flow: 2.4 gpm at hydraulic gradient of 1.0 when tested according to ASTM D 4716.

2. Filter Fabric: Nonwoven geotextile made of PP or polyester fibers or combination of both. Flow rates range from 120 to 200 gpm/sq. ft. when tested according to ASTM D 4491.

2.08 SOIL MATERIALS

A. Backfill, drainage course, impervious fill and satisfactory soil materials are specified in Division 31 Section "Earth Moving."

2.09 GEOTEXTILE FILTER FABRICS

A. Description: Fabric of PP or polyester fibers or combination of both, with flow rate range from 110 to 330 gpm/sq. ft. when tested according to ASTM D 4491.

B. Structure Type: Nonwoven, needle-punched continuous filament.

1. Survivability: AASHTO M 288 Class 2.

2. Styles: Flat and sock.

PART 3 EXECUTION

3.01 EXAMINATION

A. Examine surfaces and areas for suitable conditions where subdrainage systems are to be installed.

B. If subdrainage is required for landscaping, locate and mark existing utilities, underground structures, and aboveground obstructions before beginning installation and avoid disruption and damage of services.

C. Proceed with installation only after unsatisfactory conditions have been corrected.

3.02 EARTHWORK

A. Excavating, trenching, and backfilling are specified in Division 31 Section "Earth Moving."

3.03 PIPING APPLICATIONS

A. Underground Subdrainage Piping:

1. Perforated PE pipe and fittings, couplings, and coupled joints.
2. Perforated PVC sewer pipe and fittings for loose, bell-and-spigot joints.

3.04 Underslab Subdrainage Piping:

1. Perforated PE pipe and fittings, couplings, and coupled joints.
2. Perforated PVC sewer pipe and fittings and loose, bell-and-spigot joints.
3. Perforated concrete pipe and fittings, gaskets, and gasketed joints.

B. Header Piping:

1. ABS pip and fittings, gaskets, and gasketed and solvent-cemented joints.
2. Cast-iron soil pipe and fittings, Service class; gaskets; and gasketed joints.
3. PE drainage tubing and fittings, couplings, and coupled joints.
4. PVC sewer pipe and fittings, couplings, and coupled joints.

3.05 CLEANOUT APPLICATIONS

A. In Underground Subdrainage Piping:

1. At Grade in Earth: Cast-Iron cleanouts.
2. At Grade in Paved Areas: Cast-iron cleanouts.

B. In Underslab Subdrainage Piping:

1. In Equipment Rooms and Unfinished Areas: Cast-iron cleanouts.
2. In Finished Areas: Copper-alloy cleanouts.

3.06 FOUNDATION DRAINAGE INSTALLATION

A. Place impervious fill material on subgrade adjacent to bottom of footing after concrete footing forms have been removed. Place and compact impervious fill to dimensions indicated, but not less than 6 inches deep and 12 inches wide.

B. Lay flat-style geotextile filter fabric in trench and overlap trench sides.

C. Place supporting layer of drainage course over compacted subgrade and geotextile filter fabric, to compacted depth of not less than 4 inches.

D. Encase pipe with sock-style geotextile filter fabric before installing pipe. Connect sock sections with adhesive or tape.

E. Install drainage piping as indicated in Part 3 "Piping Installation" Article for foundation subdrainage.

F. Add drainage course to width of at least 6 inches on side away from wall and to top of pipe to perform tests.

G. After satisfactory testing, cover drainage piping to width of at least 6 inches on side away from footing and above top of pipe to within 12 inches of finish grade.

H. Install drainage course and wrap top of drainage course with flat-style geotextile filter fabric.

I. Place layer of flat-style geotextile filter fabric over top of drainage course, overlapping edges at least 4 inches.

J. Place initial backfill material over compacted drainage course. Place material in loose-depth layers not exceeding 6 inches. Thoroughly compact each layer. Final backfill to finish elevations and slope away from building.

3.07 UNDERSLAB DRAINAGE INSTALLATION

A. Excavate for underslab drainage system after subgrade material has been compacted but before drainage course has been placed. Include horizontal distance of at least 6 inches between drainage pipe and trench walls. Grade bottom of trench excavations to required slope, and compact to firm, solid bed for drainage system.

B. Lay flat-style geotextile filter fabric in trench and overlap trench sides.

C. Place supporting layer of drainage course over compacted subgrade and geotextile filter fabric, to compacted depth of not less than 4 inches.

D. Encase pipe with sock-style geotextile filter fabric before installing pipe. Connect sock sections with adhesive or tape.

E. Install drainage piping as indicated in Part 3 "Piping Installation" Article for underslab subdrainage.

F. Add drainage course to width of at least 6 inches on side away from wall and to top of pipe to perform tests.

G. After satisfactory testing, cover drainage piping with drainage course to elevation of bottom of slab, and compact and wrap top of drainage course with flat-style geotextile filter fabric.

3.08 RETAINING-WALL DRAINAGE INSTALLATION

A. Lay flat-style geotextile filter fabric in trench and overlap trench sides.

B. Place supporting layer of drainage course over compacted subgrade to compacted depth of not less than 4 inches.

C. Encase pipe with sock-style geotextile filter fabric before installing pipe. Connect sock sections with adhesive or tape.

D. Install drainage piping as indicated in Part 3 "Piping Installation" Article for retaining-wall subdrainage.

E. Add drainage course to width of at least 6 inches on side away from wall and to top of pipe to perform tests.

F. After satisfactory testing, cover drainage piping to width of at least 6 inches on side away from footing and above top of pipe to within 12 inches of finish grade.

G. Place drainage course in layers not exceeding 3 inches in loose depth; compact each layer placed and wrap top of drainage course with flat-style geotextile filter fabric.

H. Place layer of flat-style geotextile filter fabric waterproofing felt over top of drainage course, overlapping edges at least 4 inches.

I. Fill to Grade: Place satisfactory soil fill material over compacted drainage course. Place material in loose-depth layers not exceeding 6 inches. Thoroughly compact each layer. Fill to finish grade.

3.09 LANDSCAPING DRAINAGE INSTALLATION

A. Provide trench width to allow installation of drainage conduit. Grade bottom of trench excavations to required slope, and compact to firm, solid bed for drainage system.

B. Lay flat-style geotextile filter fabric in trench and overlap trench sides.

C. Place supporting layer of drainage course over compacted subgrade and geotextile filter fabric, to compacted depth of not less than 4 inches.

D. Install drainage conduits as indicated in Part 3 "Piping Installation" Article for landscaping subdrainage with horizontal distance of at least 6 inches between conduit and trench walls. Wrap drainage conduits without integral geotextile filter fabric with flat-style geotextile filter fabric before installation. Connect fabric sections with adhesive or tape.

E. Add drainage course to top of drainage conduits.

F. After satisfactory testing, cover drainage conduit to within 12 inches of finish grade.

G. Install drainage course and wrap top of drainage course with flat-style geotextile filter fabric.

H. Place layer of flat-style geotextile filter fabric waterproofing felt over top of drainage course, overlapping edges at least 4 inches.

I. Fill to Grade: Place satisfactory soil fill material over drainage course. Place material in loose-depth layers not exceeding 6 inches. Thoroughly compact each layer. Fill to finish grade.

3.10 PIPING INSTALLATION

A. Install piping beginning at low points of system, true to grades and alignment indicated, with unbroken continuity of invert. Bed piping with full bearing in filtering material. Install gaskets, seals, sleeves, and couplings according to manufacturer's written instructions and other requirements indicated.

1. Foundation Subdrainage: Install piping pitched down in direction of flow, at a minimum slope of 0.5 percent with a minimum cover of 36 inches unless otherwise indicated.

2. Underslab Subdrainage: Install piping pitched down in direction of flow, at a minimum slope of 0.5 percent.

3. Retaining-Wall Subdrainage: When water discharges at end of wall into stormwater piping system, install piping pitched down in direction of flow, at a minimum slope 0.5 percent and with a minimum cover of 36 inches, unless otherwise indicated. However, when water discharges through wall weep holes, pipe may be installed with a minimum slope of zero percent.

4. Landscaping Subdrainage: Install piping pitched down in direction of flow, at a minimum slope of 0.5 percent and with a minimum cover of 36 inches, unless otherwise indicated.

5. Lay perforated pipe with perforations down.

6. Excavate recesses in trench bottom for bell ends of pipe. Lay pipe with bells facing upslope and with spigot end entered fully into adjacent bell.

B. Use increasers, reducers, and couplings made for different sizes or materials of pipes and fittings being connected. Reduction of pipe size in direction of flow is prohibited.

C. Install ABS piping according to ASTM D 2321.

D. Install PE piping according to ASTM D 2321.

E. Install PVC piping according to ASTM D 2321.

F. Install concrete piping according to ACPA's "Concrete Pipe Handbook."

3.11 PIPE JOINT CONSTRUCTION

A. Cast-Iron Soil Pipe and Fittings: Hub and spigot, with rubber compression gaskets according to CISPI's "Cast Iron Soil Pipe and Fittings Handbook." Use gaskets that match class of pipe and fittings.

B. Join ABS pipe and fittings according to ASTM D 2751.

C. Join PE pipe, tubing, and fittings with couplings for soil-tight joints according to AASHTO's "Standard Specifications for Highway Bridges," Division II, Section 26 .4 .2.4, "Joint Properties."

D. Join perforated, PE pipe and fittings with couplings for soil-tight joints according to AASHTO's "Standard Specifications for Highway Bridges," Division II, Section 26 .4 .2.4, "Joint Properties"; or according to ASTM D 2321.

E. Join PVC pipe and fittings according to ASTM D 3034 with elastomeric seal gaskets according ASTM D 2321.

F. Join perforated PVC pipe and fittings according to ASTM D 2729, with loose bell-and-spigot joints.

G. Join perforated concrete pipe and fittings with gaskets according to ASTM C 443.

H. Special Pipe Couplings: Join piping made of different materials and dimensions with special couplings made for this application. Use couplings that are compatible with and fit materials and dimensions of both pipes.

3.12 CLEANOUT INSTALLATION

A. Comply with requirements for cleanouts specified in Division 33 Section "Storm Utility Drainage Piping."

B. Cleanouts for Subdrainage:

1. Install cleanouts from piping to grade. Locate cleanouts at beginning of piping run and at changes in direction. Install fittings so cleanouts open in direction of flow in piping.

2. In vehicular-traffic areas, use NPS 4 cast-iron soil pipe and fittings for piping branch fittings and riser extensions to cleanout. Set cleanout frames and covers in a cast-in-place concrete anchor, 18 by 18 by 12 inches deep. Set top of cleanout flush with grade. Cast-iron pipe may also be used for cleanouts in non-vehicular traffic areas.

3. In nonvehicular-traffic areas, use NPS 4 cast-iron pipe and fittings for piping branch fittings and riser extensions to cleanout. Set cleanout frames and covers in a cast-in-place concrete anchor, 12 by 12 by 4 inches deep. Set top of cleanout plug 1 inch above grade.

4. Comply with requirements for concrete specified in Division 03 Section "Cast-in-Place Concrete." Division 03 Section "Miscellaneous Cast-in-Place Concrete."

C. Cleanouts for Underslab Subdrainage:

1. Install cleanouts and riser extensions from piping to top of slab. Locate cleanouts at beginning of piping run and at changes in direction. Install fittings so cleanouts open in direction of flow in piping.

2. Use NPS 4 cast-iron soil pipe and fittings for piping branch fittings and riser extensions to cleanout flush with top of slab.

3.13 CONNECTIONS

A. Drawings indicate general arrangement of piping, fittings, and specialties.

B. Connect low elevations of subdrainage system to building's solid-wall-piping storm drainage system.

C. Where required, connect low elevations of foundation underslab subdrainage to stormwater sump pumps.

3.14 IDENTIFICATION

A. Arrange for installation of green warning tapes directly over piping. Comply with requirements for underground warning tapes specified in specified in Division 31 Section "Earth Moving."

1. Install PE warning tape detectable warning tape over ferrous piping.

2. Install detectable warning tape over nonferrous piping and over edges of underground structures.

3.15 FIELD QUALITY CONTROL

A. Tests and Inspections:

1. After installing drainage course to top of piping, test drain piping with water to ensure free flow before backfilling.
2. Remove obstructions, replace damaged components, and repeat test until results are satisfactory.

3.16 CLEANING

A. Clear interior of installed piping and structures of dirt and other superfluous material as work progresses. Maintain swab or drag in piping and pull past each joint as it is completed. Place plugs in ends of uncompleted pipe at end of each day or when work stops.

END OF SECTION 33 46 00

SECTION 32 18 16.13

PLAYGROUND PROTECTIVE SURFACING

PART 1 GENERAL

1.01 RELATED DOCUMENTS

A. Drawings and general provisions of the Contract, including General and Supplementary Conditions and Division 01 Specification Sections, apply to this Section.

1.02 SUMMARY

A. This Section includes the following:

1. Organic loose-fill surface.

B. Related Sections include the following:

1. Division 31 Section "Earth Moving" for drainage course, drainage/separation geotextiles, and subbase courses.
2. Division 33 Section "Subdrainage" for playground subdrainage system.

1.03 DEFINITIONS

A. Critical Height: Standard measure of shock attenuation. According to CPSC No. 325, this means "the fall height below which a life-threatening head injury would not be expected to occur."

B. Use Zone: According to ASTM F 1487, "the area beneath and immediately adjacent to a play structure that is designated for unrestricted circulation around the equipment and on whose surface it is predicted that a user would land when falling from or exiting the equipment," sometimes referred to as the safety zone.

1.04 PERFORMANCE REQUIREMENTS

A. Impact Attenuation: According to ASTM F 1292.

B. Accessibility of Surface Systems: According to ASTM F 1951.

C. Minimum Characteristics for Organic Loose-Fill Surfaces: According to ASTM F 2075.

1.05 SUBMITTALS

A. Product Data: For each type of product indicated.

B. Shop Drawings: Show the following:

1. Installation details for curbs, ramps, and accessories.
2. Location of wear mats in organic loose-fill surfaces.
3. Location of drainage accessories.
4. Plan showing that safety surfacing will exceed the minimum size and configuration for equipment selected and approved.

C. Samples for Verification: For each type of playground surface system indicated.

1. Minimum 1-quart loose-fill surface sealed in a container.
2. Minimum 12-by-12-inch sample of geosynthetic fabric.

D. Qualification Data: For Installer and testing agency.

E. Material Test Reports: For the following, from a qualified testing agency, indicating compliance with requirements:

1. Organic loose-fill surface.

F. Material Certificates: For each playground surface system product, signed by manufacturers.

G. Field quality-control test reports.

H. Maintenance Data: For playground surface system to include in maintenance manuals.

I. Warranty: Special warranty specified in this Section.

1.06 QUALITY ASSURANCE

A. Installer Qualifications: An employer of workers trained and approved by manufacturer.

B. Testing Agency Qualifications: An independent agency qualified according to ANSI Z34.1 for testing indicated.

C. Source Limitations: Obtain playground surface system materials, through one source from a single manufacturer.

1. Provide secondary materials geosynthetics, and repair materials of type and from source recommended by manufacturer of playground surface system materials.

1.07 PROJECT CONDITIONS

A. Weather Limitations: Proceed with installation only when existing and forecasted weather conditions permit playground surface system installation to be performed according to manufacturers' written instructions and warranty requirements.

1.08 COORDINATION

A. Coordinate installation of playground surface systems with installation of playground equipment specified in Division 31 Section "Play Field Equipment and Structures" and with installation of curbing and pavement if adjacent to playground protective surfacing.

1.09 WARRANTY

A. Special Warranty: Manufacturer's standard form in which manufacturer agrees to repair or replace components of playground surface system that fail in materials or workmanship within specified warranty period.

1. Failures include, but are not limited to, the following:

a. Reduction in impact attenuation.

b. Deterioration of surface and other materials beyond normal weathering.

2. Warranty Period: from date of Substantial Completion.

a. 10-year performance warranty stating that the product will meet all U.S. CPSC guidelines on impact attenuation.

b. 3-year warranty stating that product is to be free from defects such as decay and biological degradation.

c. Product failure to conform to the warranties shall result in replacement of the defective material and/or system at no cost to the Owner.

d. Product liability insurance policy.

e. Maintenance requirements on the part of the Owner in order to meet the conditions of the warranties and product liability insurance.

1.10 EXTRA MATERIALS

A. Furnish extra materials described below that match products installed and that are packaged with protective covering for storage and identified with labels describing contents.

1. Organic or inorganic loose fill surface, percent of amount installed, but no less than of cubic feet of material.

PART 2 PRODUCTS

2.01 MANUFACTURERS

A. In other Part 2 articles where titles below introduce lists, the following requirements apply to product selection:

1. Products: Subject to compliance with requirements, provide one of the products specified.

2.02 ORGANIC LOOSE-FILL SURFACE

A. Engineered Wood Fibers: Random-sized wood fibers, in manufacturer's standard fiber size, approximately 10 times longer than wide; containing no bark, leaves, twigs, or foreign or toxic materials according to ASTM F 2075; graded according to manufacturer's standard specification for material consistency for playground surfaces and for accessibility according to ASTM F 1951.

1. Products:
    a. "Fibar System" complete with patented hardwood fiber and 2 layers of "Fibarfelt" (Geotextile Fabric). The "Fibar System" is manufactured by Robert Godfrey, LTD. Contact Seavey Corp. at 800.235.2440.
    b. "Wood Carpet System" complete with patented hardwood fiber meeting gradation requirements of ASTM C136 (98 percent of Wood Carpet dimensions shall not exceed 4 cm in length x 1.3 cm in width x 3.25 cm in depth); and 2 layers of Quline "WQ150" (Geotextile fabric). The "Wood Carpet System" is manufactured by Zeager Bros., Inc. Contact Zeager Bros., Inc. at 800.346.8524.
    c. "GT Impax Engineered Wood Fiber System" complete with hardwood fiber meeting gradation requirements of ASTM C136 and 2 layers of geotextile fabric. The "GT Impax Engineered Wood Fiber System" is supplied by Game Time; 800.235.2440.
2. Critical Height: As required for equipment selected.
3. Uncompressed Material Depth: Not less than as required for critical height indicated.

2.03 LOOSE-FILL ACCESSORIES

A. Stabilizing Mats: Manufacturer's standard, water-permeable PVC or rubber mats tested for impact attenuation according to ASTM F 1292, and rated for use in the following locations:
    1. Location: At excessive wear areas and as follows:
        a. Below top of loose-fill surface.
        b. Under and in front of slide exits.
        c. At finished grade around transfer stations at accessible perimeter.
        d. Where indicated.
    2. Size: Minimum 36 by 36 inches.
    3. Color: As selected from manufacturer's full range. Architect to select color.

2.04 GEOSYNTHETICS

A. Drainage/Separation Geotextile: Nonwoven, needle-punched geotextile, manufactured for subsurface drainage applications and made from polyolefins or polyesters; complying with the following minimum properties determined according to ASTM D 4759 and referenced standard test methods:
    1. Weight: 4 oz./sq. yd. according to ASTM D 5261.
    2. Water Flow Rate: 100 gpm/sq. ft. according to ASTM D 4491.

B. Weed-Control Barrier: Composite fabric geotextile consisting of woven, needle-punched polypropylene substrate bonded to a nonwoven polypropylene fabric, weighing not less than 4.8 oz./sq. yd.

PART 3 EXECUTION

3.01 PREPARATION

A. General: Prepare substrates to receive surfacing products according to playground surface system manufacturer's written instructions. Verify that substrates are sound and without high spots, ridges, holes, and depressions.

3.02 INSTALLATION, GENERAL

A. General: Comply with playground surface system manufacturer's written installation instructions. Install playground surface system over area and in thickness indicated.

3.03 GEOSYNTHETIC INSTALLATION

A. General: Install geosynthetics according to playground surface system manufacturer's and geosynthetic manufacturer's written instructions.
    1. Geotextiles: Completely cover area indicated, overlapping sides and edges a minimum of 8 inches with adhesively bonded seams.
        a. Perimeter: Adhere edges on all sides to top of footing or to side of perimeter curbing at half of height of the curbing.

3.04 INSTALLATION OF LOOSE-FILL PLAYGROUND SURFACE SYSTEMS

A. Loose Fill: Place playground surface system materials including manufacturer's standard amount of excess material for compacting mechanically to required depths after Installation of playground equipment support posts and foundations.

B. Stabilizing Mats: Coordinate installation of mats and mat anchoring system with placing and compacting of loose-fill. Install mats so that 9" of compacted loose fill material remains below mat.

C. Compacting and Grading: Uniformly compact and grade loose-fill according to manufacturer's written instructions to an even surface free from irregular surface changes as indicated.

D. Finish Grading: Hand rake to a smooth finished surface and to required elevations.

3.05 FIELD QUALITY CONTROL

A. Testing Agency: Engage a qualified independent testing and inspecting agency to perform field tests and inspections and prepare test reports.

B. Testing Services: Testing and inspecting of completed applications of playground surface system shall take place according to ASTM F 1292.

C. Remove and replace applications of playground surface system where test results indicate that it does not comply with requirements.

D. Additional testing and inspecting, at Contractor's expense, will be performed to determine compliance of replaced or additional work with requirements.

3.06 PROTECTION

END OF SECTION 32 18 16.13

SECTION 131100

WATER SPRAYGROUND

PART 1 - GENERAL

1.01 RELATED DOCUMENTS

A. Drawings and General Provisions of the Contract, including General and Supplementary Conditions and Division 1 - Specification Sections, apply to the work specified in this section.

1.02 SUMMARY

A. Furnish all labor, material, equipment and services for installation of the water sprayground including sprayground areas, water features, controllers, programming software and all sprayground system components.

B. The outdoor water sprayground shall have an approximate area of 7,367 square feet including the various water play features as indicated in these specifications as well as swimming pool drawings.

C. Design, furnish and install water pad structure and install final finishes to this surface.

D. Furnish and install the water sprayground systems as indicated on the swimming pool drawings, specified herein, and as necessary for proper completion including, but is not necessarily limited to:

1. All water spray features.
2. All activation devices.
3. All controllers.
4. Supply and installation of mechanical equipment and pool piping as necessary for sprayground operation.
5. Operations and maintenance manuals.
6. On site startup training.
7. Proper winterization of the sprayground system.
8. Proper signage as required.

E. Related Work Specified Elsewhere

1. All electrical works, buildings and permits.

1.03 QUALITY ASSURANCE

A. The supplier shall demonstrate their specific experience and competency in the manufacturing and installation of the water sprayground equipment and systems.

B. The supplier shall have completed at least five installations comparable to the system specified herein within the last 5 years. Submit a list of such projects with name, address and current telephone number of the Owner's Operator and Architect of Record to the Architect with bid on the bid date.

C. The Owner reserves the right to reject any bid if the evidence submitted by, or investigation of, such bidder fails to satisfy the Owner that such bidder is properly qualified to carry out the obligation of the contract and to complete work described or if bidder does not have the qualifications stated herein.

1.04 REGULATORY AGENCY REQUIREMENTS AND ENGINEERING SERVICES

A. The entire water sprayground system shall be designed and installed to meet all national and local codes and be in compliance with applicable sections of the American National Standards Institute / National Spa and Pool Institute (ANSI /NSPI-2 1999).

B. The system shall comply with all necessary approvals obtained by the Architect from local regulatory agencies governing the design and construction of public swimming pools.

C. The CONTRACTOR shall give all necessary notices, obtain all permits and pay all government fees, and other costs in connection with his work; file all necessary drawings, prepare all documents and obtain all necessary approvals of governmental departments having jurisdiction; obtain all required certificates of inspection for his work and deliver same to the Architect before request for acceptance and final payment for the work.

D. The CONTRACTOR shall include in the work, without extra cost to the Owner, any labor, materials, services, apparatus or drawings in order to comply with all applicable laws, ordinances, rules and regulations, whether or not shown on drawings and/or specified.

E. Where provisions of pertinent codes and standards conflict with this specification, the more stringent shall govern.

1.05 COORDINATION AND CLARIFICATION

A. Coordinate with other trades affecting and affected by work in this section.

B. The CONTRACTOR must establish with other contractors or subcontractors, having related work in this Section, that all work necessary to complete the sprayground as shown on the drawings and in the specifications is included in the base bid and alternates to the Owner.

C. If in doubt regarding the responsibility for work covered in this section and/or discovery of errors or omissions in the bidding documents, the CONTRACTOR shall notify the Architect through channels established by the specifications and request a clarification ten (10) days prior to the bid date.

1.06 CONTRACTORS ALTERNATIVE PROPOSAL

A. Suppliers to submit their bid based on materials, equipment and methods as specified in this section. Any substitutions of material, equipment or method must be submitted in accordance with the specified procedure described in Division 1. Any required changes to the construction documents shall be described in writing and any costs or changes must be included in the price quoted to complete the installation.

1.07 SUBMITTALS

A. Division 1 requirements.

B. Shop Drawings

1. Provide a complete set of checked shop drawings required to fabricate and assemble all water sprayground systems.

2. Statements

a. Furnish the Owner with copies of all permits and receipts for fee payments.

3. Test Reports

a. Submit a sample form of any performance test reports that will be used by the installer following the water sprayground erection, prior to beginning of installation.

C. Include complete product data indexed, tabbed and referenced to specifications.

D. Submit details indicated the water spray elements, activation devices, controllers, as well as any necessary flow regulation devices necessary to operate the water sprayground system as indicated by the manufacturer.

E. Specify water supply requirements and required pump characteristics to Architect, for approval, prior to preparation of fabrication drawings.

F. Guarantee / Warranty

1. All work of this section shall be warranted against all defects of material and/or application for a period of one (1) year from date of acceptance. Any failures that may occur within this warranty period, due to defective installation and/or materials, shall upon written notification of such failure be immediately repaired or replaced.

1.08 MAINTENANCE MANUALS AND CLOSE-OUT SUBMITTALS

A. Submit six (6) bound volumes of complete Operating and Maintenance instructions covering all installed equipment. Include wiring diagrams, lubrication and user maintenance instructions.

B. Include manufacturer's recommended maintenance schedule, parts lists, piping diagram and troubleshooting information.

C. Include one set of approved submittals as a part of each O & M manual.

1.09 PRODUCT DELIVERY, STORAGE AND HANDLING

A. Deliver material in manufacturer's original, unopened containers and crates with all labels intact and legible.

B. Deliver materials in sufficient time and quantity to allow continuity of work and compliance with approved construction schedule.

C. Handle materials in a manner to prevent damage.

D. Store all materials on clean raised platforms with weather protective covering when stored outdoors. Provide continuous protection of materials against damage or deterioration.

PART 2 - PRODUCTS

2.01 GENERAL

A. The specified water sprayground elements shall be provided in the locations as provided in the sprayground drawings and specified hereinafter. The water sprayground elements shall be provided by Rain Drop Products, LLC, 716 Union Street, Ashland, OH 44805. The supplier shall furnish water sprayground features complete with all anchoring and fastening devices, required gaskets, controllers, programmers and program software. Rain Drop Products, LLC, is the basis of design. Products from Vortex Aquatic Structures International, Water Play Solutions Corp., and Water Odyssey Fountain People, Inc., shall be considered provided they meet the design intent, feature flow rates, and desired sports theming as indicated in the Contract Documents. Contractor shall be responsible for all necessary structural changes and additions for substitution products. Contractor shall be responsible for all necessary electrical connection changes and additions for substitution products.

2.02 SPRAYGROUND FEATURES

A. The following Water Sprayground items shall be included for the 5-12 Year Old Sprayground Area:

1. Big Leak Baseball Bat (1 required)

   a. Model number BLBB-001-LF-OM.

   b. Construction: the feature shall be manufactured from rigid fiberglass and other materials inert to pool chemicals. Where metal or steel is supplied as part of the component all such parts shall be manufactured from 304stainless steel, mild steel components (except valve body) shall not be used regardless of rust preventative coatings.

   c. Fasteners: shall be type 304 stainless steel for all 4 anchor bolts. Anchor bolts for mounting to foundation shall be power bolt expansion type anchor bolt.

   d. Base Skirt: shall be ABS molded plastic made in two piece construction to rigidly attach to stem.

   e. Colors: shall be available from manufacturers color charts or with special colors upon request. Colors are ultraviolet stabilized to inhibit fading. Standard color is stem-Sandy Plank wood grain and baseball– white with red stitching. Color Selection by Architect.

   f. Hydraulic Requirements

      1) Maximum recommended 8 FT Diameter Area of Influence, 25 GPM Low Flow.

2. Crossbar Jet (1 required)

a. Model number CBJT-008-LF-OM.

b. Construction: the feature shall be manufactured from rigid fiberglass and other materials inert to pool chemicals. Where metal or steel is supplied as part of the component all such parts shall be manufactured from 304stainless steel, mild steel components (except valve body) shall not be used regardless of rust preventative coatings.

c. Piping: and/or structural tubing shall be six inch rigid corrosion proof, fiberglass material with a smooth high gloss finish. Attachment flanges shall provide eight 3/4" bolt holes for mounting at the base of the pipe and/or structural tubing.

d. Fasteners: shall be type 304 stainless steel for all 4 anchor bolts. Anchor bolts for mounting to foundation shall be power bolt expansion type anchor bolt.

e. Base Skirt: shall be ABS molded plastic made in two piece construction to rigidly attach to stem.

f. Colors: shall be available from manufacturers color charts or with special colors upon request. Colors are ultraviolet stabilized to inhibit fading. Color Selection by Architect.

g. Hydraulic Requirements

1) Maximum recommended 11 FT (L) x 6 FT (W) Area of Influence, 25 GPM Low Flow.

3. T-Crossbar Spraying Goal Post (1 required)

a. Model number TCFG-001-LF-OM.

b. Construction: the feature shall be manufactured from rigid fiberglass and other materials inert to pool chemicals. Where metal or steel is supplied as part of the component all such parts shall be manufactured from 304stainless steel, mild steel components (except valve body) shall not be used regardless of rust preventative coatings.

c. Piping: and/or structural tubing shall be six inch rigid corrosion proof, fiberglass material with a smooth high gloss finish. Attachment flanges shall provide eight 3/4" bolt holes for mounting at the base of the pipe and/or structural tubing.

d. Fasteners: shall be type 304 stainless steel for all 4 anchor bolts. Anchor bolts for mounting to foundation shall be power bolt expansion type anchor bolt.

e. Base Skirt: shall be ABS molded plastic made in two piece construction to rigidly attach to stem.

f. Colors: shall be available from manufacturers color charts or with special colors upon request. Colors are ultraviolet stabilized to inhibit fading. Color Selection by Architect.

g. Hydraulic Requirements

1) Maximum recommended 11 FT (L) x 6 FT (W) Area of Influence, 25 GPM Low Flow.

4. Tennis Racquet Hoop ("Watery Racquet") (1 required)

a. Model number TRHP-001-MF-OM.

b. Construction: the feature shall be manufactured from rigid fiberglass and other materials inert to pool chemicals. Where metal or steel is supplied as part of the component all such parts shall be manufactured from 304stainless steel, mild steel components (except valve body) shall not be used regardless of rust preventative coatings.

c. Piping: and/or structural tubing shall be six inch rigid corrosion proof, fiberglass material with a smooth high gloss finish.

d. Fasteners: shall be type 304 stainless steel for all 4 anchor bolts. Anchor bolts for mounting to foundation shall be power bolt expansion type anchor bolts.

e. Colors: shall be available from manufacturers color charts or with special colors upon request. Colors are ultraviolet stabilized to inhibit fading. Color Selection by Architect.

f. Hydraulic Requirements

1) Maximum recommended 9 FT (L) x 3 FT (W) Area of Influence, 1.9 GPM Low Flow.

5. Misting Soccer Ball (1 required)

a. Model number SCBL-001-MF-OM.

b. Construction: the feature shall 3' FT 6" IN diameter and shall be manufactured from high density molded fiberglass suitable for installation in a swimming pool environment. Where metal or steel is supplied as part of the component all such parts shall be manufactured from 304 stainless steel, mild steel components shall not be used regardless of rust preventative coatings. Feature shall anchor flush on the surface to which they are installed and shall be capable of emitting multiple streams of water from nozzle mounted on top of feature.

c. Colors: shall be supplied in standard colors. Special colors are available upon request. Colors are ultraviolet stabilized to inhibit fading. Color Selection by Architect.

d. Hydraulic Requirements

1) Maximum recommended 5 FT Diameter Area of Influence, 1 GPM Low Flow.

6. Fielder's Glove Misting Hoop (1 required)

a. Model number BLBG-001-MF-OM.

b. Construction: the feature shall be manufactured from rigid fiberglass and other materials inert to pool chemicals. Where metal or steel is supplied as part of the component all such parts shall be manufactured from 304stainless steel, mild steel components (except valve body) shall not be used regardless of rust preventative coatings.

c. Fasteners: shall be type 304 stainless steel for all 4 anchor bolts. Anchor bolts for mounting to foundation shall be power bolt expansion type anchor bolts.

d. Colors: shall be available from manufacturers color charts or with special colors upon request. Colors are ultraviolet stabilized to inhibit fading. Color Selection by Architect.

e. Hydraulic Requirements

1) Maximum recommended 6 FT (L) x 3 FT (W) Area of Influence, 2.5 GPM Low Flow.

7. Giant Circle Time (1 required)

a. Model number GICR-16-001-LF.

b. Construction: The body shall be manufactured from heavy duty, high tensile strength Schedule 80 PVC, gas welded and shall be impervious to rust and corrosion. The nozzles shall be high strength, corrosion resistant machine cast brass.

c. Piping/Stem: All piping connection shall be made from heavy-duty high tensile strength Schedule 80 PVC.

d. Hydraulic Requirements

1) Maximum recommended 18 FT Diameter Area of Influence, 18 GPM Low Flow.

8. Water Fun Cannon (2 required)

a. Model number WFCN-004-OM.

b. Construction: the feature shall be manufactured from rigid fiberglass and other materials inert to pool chemicals. Where metal or steel is supplied as part of the component all such parts shall be manufactured from 304stainless steel, mild steel components (except valve body) shall not be used regardless of rust preventative coatings.

c. Piping: and/or structural tubing shall be six inch rigid corrosion proof, fiberglass material with a smooth high gloss finish. Attachment flanges shall provide eight 3/4" bolt holes for mounting at the base of the pipe and/or structural tubing.

d. Fasteners: shall be type 304 stainless steel for all 4 anchor bolts. Anchor bolts for mounting to foundation shall be power bolt expansion type anchor bolt.

e. Base Skirt: shall be ABS molded plastic made in two piece construction to rigidly attach to stem.

f. Colors: shall be available from manufacturers color charts or with special colors upon request. Colors are ultraviolet stabilized to inhibit fading. Color Selection by Architect.

g. Hydraulic Requirements

1) Maximum recommended 2.5 GPM Flow.

B. The following Water Sprayground items shall be included for the Plaza Sprayground Area:

1. Misting Basketball (1 required)

a. Model number BKBL-001-MF-OM.

b. Construction: the feature shall 3' FT 6" IN diameter and shall be manufactured from high density molded fiberglass suitable for installation in a swimming pool environment. Where metal or steel is supplied as part of the component all such parts shall be manufactured from 304 stainless steel, mild steel components shall not be used regardless of rust preventative coatings. Feature shall anchor flush on the surface to which they are installed and shall be capable of emitting multiple streams of water from nozzle mounted on top of feature.

c. Colors: shall be supplied in standard colors. Special colors are available upon request. Colors are ultraviolet stabilized to inhibit fading. Color Selection by Architect.

d. Hydraulic Requirements

1) Maximum recommended 5 FT Diameter Area of Influence, 1 GPM Low Flow.

2. Pop Jets - Curved (2 required)

a. Model number PPJT-002-LF.

b. Construction: The body shall be manufactured from heavy duty, high tensile strength PVC, gas welded and shall be impervious to rust and corrosion. The nozzle shall be adjustable high strength, corrosion resistant HDPE.

c. Piping/Stem: All nozzles and piping connection shall be made from heavy-duty high tensile strength PVC.

d. Hydraulic Requirements

1) Maximum recommended 5 FT (L) x 9 FT (W) Area of Influence, 16.1 GPM Low Flow.

3. Mini Popkorn Jet (3 required)

a. Model number MPKJ-002-LF-OM.

b. Construction: The body shall be manufactured from heavy duty, high tensile strength Schedule 80 PVC, gas welded and shall be impervious to rust and corrosion. The nozzles shall be high strength, corrosion resistant machine cast brass.

c. Piping/Stem: All piping connection shall be made from heavy-duty high tensile strength Schedule 80 PVC.

d. Hydraulic Requirements

1) Maximum recommended 3 FT Diameter Area of Influence, 2.3 GPM Low Flow.

C. The following Water Sprayground items shall be included for the 2-5 Year Old Sprayground Area:

1. Misting Tennis Ball (1 required)

a. Model number TNBL-001-MF-OM.

b. Construction: the feature shall 3' FT 6" IN diameter and shall be manufactured from high density molded fiberglass suitable for installation in a swimming pool environment. Where metal or steel is supplied as part of the component all such parts shall be manufactured from 304 stainless steel, mild steel components shall not be used regardless of rust preventative coatings. Feature shall anchor flush on the surface to which they are installed and shall be capable of emitting multiple streams of water from nozzle mounted on top of feature.

c. Colors: shall be supplied in standard colors. Special colors are available upon request. Colors are ultraviolet stabilized to inhibit fading. Color Selection by Architect.

d. Hydraulic Requirements

1) Maximum recommended 5 FT Diameter Area of Influence, 1 GPM Low Flow.

2. Misting Baseball (1 required)

a. Model number MTBL-001-MF-OM.

b. Construction: the feature shall 3' FT 6" IN diameter and shall be manufactured from high density molded fiberglass suitable for installation in a swimming pool environment. Where metal or steel is supplied as part of the component all such parts shall be manufactured from 304 stainless steel, mild steel components shall not be used regardless of rust preventative coatings. Feature shall anchor flush on the surface to which they are installed and shall be capable of emitting multiple streams of water from nozzle mounted on top of feature.

c. Colors: shall be supplied in standard colors. Special colors are available upon request. Colors are ultraviolet stabilized to inhibit fading. Color Selection by Architect.

d. Hydraulic Requirements

1) Maximum recommended 5 FT Diameter Area of Influence, 1 GPM Low Flow.

3. Aqua Run Slide (1 required)

a. Model number AQRN-001-LF-OM.

b. Construction: the feature shall be manufactured from molded fiberglass and other materials inert to pool chemicals. Where metal or steel is supplied as part of the component all such parts shall be manufactured from 304 stainless steel, mild steel components (except valve body) shall not be used regardless of rust preventive coatings.

c. Piping/Material: and/or structural tubing shall be rigid corrosion proof, reinforced fiberglass material with a smooth high gloss finish.

d. Fasteners: shall be type 304 stainless steel for all anchor bolts, fasteners and bolt ring. Anchor bolts for mounting to foundation shall be expansion type anchor bolts.

e. Colors: shall be available from manufacturers color charts or with special colors upon request. Colors are ultraviolet stabilized to inhibit fading. Slide run and steps to be standard Light House White. Color Selection by Architect.

f. Hydraulic Requirements

1) Maximum recommended 10 FT (L) x 12 FT (W) Area of Influence, 6.6 GPM Low Flow.

4. Slide Exit Pad – 3' x 8' (1 required)

a. Model number Pad-3X8.

b. Foam Pad: shall be 2" thick, durable closed cell foam.

c. Cover: shall be slip resistant, fully adhered, 60 ml. PVC liner membrane.

d. Fasteners: shall be stainless steel anchor fasteners. Nylon bantum plug inserts are supplied for conductor isolation.

e. Colors: to be standard light blue. (Pebble)

5. Tunnel Arch (1 required)

   a. Model number TNAR-008.

   b. Construction: The body shall be manufactured from heavy duty, high tensile strength PVC, gas welded and shall be impervious to rust and corrosion. The nozzle shall be adjustable high strength, corrosion resistant HDPE.

   c. Piping/Stem: All piping connection shall be made from heavy-duty high tensile strength PVC.

   d. Hydraulic Requirements

      1) Maximum recommended 8 FT (L) x 6 FT (W) Area of Influence, 30 GPM Flow.

6. Mini Foam Geyser (2 required)

   a. Model number FMGS-002-OM.

   b. Construction: The body shall be manufactured from heavy duty, high tensile strength Schedule 80 PVC, gas welded and shall be impervious to rust and corrosion. The nozzles shall be high strength, corrosion resistant HDPE.

   c. Piping/Stem: All piping connection shall be made from heavy-duty high tensile strength Schedule 80 PVC.

   d. Hydraulic Requirements

      1) Maximum recommended 5 FT Diameter Area of Influence, 5 GPM Flow.

7. Mini Popkorn Jet (3 required)

   a. Model number MPKJ-002-LF-OM.

   b. Construction: The body shall be manufactured from heavy duty, high tensile strength Schedule 80 PVC, gas welded and shall be impervious to rust and corrosion. The nozzles shall be high strength, corrosion resistant machine cast brass.

   c. Piping/Stem: All piping connection shall be made from heavy-duty high tensile strength Schedule 80 PVC.

   d. Hydraulic Requirements

      1) Maximum recommended 3 FT Diameter Area of Influence, 2.3 GPM Low Flow.

8. Upstream Jet (4 required)

   a. Model number UPJT-007-LF-OM.

   b. Construction: The body shall be manufactured from heavy duty, high tensile strength Schedule 80 PVC, gas welded and shall be impervious to rust and corrosion. The nozzles shall be high strength, corrosion resistant HDPE.

   c. Piping/Stem: All piping connection shall be made from heavy-duty high tensile strength Schedule 80 PVC.

   d. Colors: Cover to be standard white with blue ball nozzle.

   e. Hydraulic Requirements

      1) Maximum recommended 3 FT Diameter Area of Influence, 2.3 GPM Low Flow.

9. Slant Jet (4 required)

   a. Model number SLJT-003-LF-OM.

   b. Construction: The body shall be manufactured from heavy duty, high tensile strength PVC, gas welded and shall be impervious to rust and corrosion. The nozzle shall be adjustable high strength, corrosion resistant HDPE.

c. Piping/Stem: All piping connection shall be made from heavy-duty high tensile strength PVC.

d. Hydraulic Requirements

1) Maximum recommended 8 FT (L) x 4 FT (W) Area of Influence, 1.2 GPM Low Flow.

2.03 SPRAYGROUND FEATURES MOUNTING SYSTEM

A. Omni-Pod (29 required)

1. Model number POD-A001

2. Construction: The body shall be manufactured from heavy wall PVC and shall be impervious to rust and corrosion. The top plate/cover shall be white high strength PVC, .250 inch thick. The plate shall be installed with a removable tamper resistant screw. Cover can be removed when a feature is ready to be installed. The cover can be replaced to cover the supply inlet if the feature is removed at any time. The tamper resistant screws must be stainless steel to prevent corrosion.

3. Piping/Stem: All piping connection shall be made from heavy-duty high tensile strength PVC. A female socket weld connection shall be supplied to connect to the water supply line supplied by others.

4. Colors: Cover to be standard white. Body to be standard gray.

2.04 SPRAYGROUND DRAINS

A. 12" x 12" Drain Box with 6" Outlet (3 required)

1. Model number DRN12-002.

2. Construction: the drain shall be manufactured from rigid fiberglass with a gel-coat interior and other materials inert to pool chemicals. Where metal or steel is supplied as part of the feature all such parts shall be either 304 stainless steel, brass or corrosion protected.

3. Colors: shall be white grate with industrial gray sump.

4. Hydraulic Requirements

a. Maximum recommended drain capacity of 135 GPM at 1.5 FT/S.

2.05 SPRAYGROUND ACTIVATION BOLLARDS

A. Activation Bollard (3 required)

1. Model number BOL-A001.

2. GENERAL

a. The specified feature shall be suitable for installation in spraygrounds and shall be manufactured by Rain Drop Products. The supplier shall furnish bollard complete with all anchoring and fastening devices, required gaskets and base skirt. Installation shall be supplied by others. Rain Drop Products, LLC, is the basis of design. Products from Vortex Aquatic Structures International, Water Play Solutions Corp., and Water Odyssey Fountain People, Inc., shall be considered provided they meet the design intent, feature flow rates, and desired sports theming as indicated in the Contract Documents. Contractor shall be responsible for all necessary structural changes and additions for substitution products. Contractor shall be responsible for all necessary electrical connection changes and additions for substitution products.

3. DESIGN

a. Construction: the feature shall be manufactured from rigid fiberglass and other materials inert to pool chemicals. Where metal or steel is supplied as part of the feature all such parts shall be either 304 stainless steel, brass or corrosion protected.

b. Piping/Stem: shall be rigid corrosion proof and shall consist of an 8-inch diameter, rigid fiberglass bollard with a high gloss finish housing an infrared sensor. Attachment flange shall provide 3/4 inch bolt holes on a 11.5 inch bolt pattern. PVC is not acceptable and shall not be used.

c. Structural Piping Strength:

1) Tensile Strength (Longitudinal) = 110,000 psi; Compressive Strength (Longitudinal) = 50,000 psi; Compressive Strength (Circumferential) = 26,000 psi.

d. Fasteners: shall be type 304 stainless steel for all anchor bolts, fasteners, and bolt ring. Anchor bolts for mounting to foundation shall be expansion type anchor bolts.

e. Base Skirt: shall be ABS molded plastic made in two piece construction to rigidly attach to stem.

f. Colors: shall be available from manufacturers color charts or with special colors upon request. Colors are ultraviolet stabilized to inhibit fading.

4. CONTROLS

a. Activator: The Activator is an infrared sensor protected by a lexan face plate. The sensor senses the presence of a person and sends a signal to the CPU to activate the systems software program. The program stays on for approximately 12 minutes before it needs to be re-activated.

b. Wiring: Bollard Activator operates on 24 VAC current and is hard wired to the CPU. It is designed to turn off when the program is not reactivated by movement on the Sprayground. The sensor has a safety override built into it to prevent an individual from trying to bypass it by covering it with an object in order to keep the Sprayground CPU running constantly.

5. FEATURE/FLOW OPTIONS

a. Sku # BOL-A001: Standard Bollard Activator feature with a gasket. Gasket shall be 1/4 inch thick 40 durameter neoprene rubber.

2.06 SPRAYGROUND CONTROL SYSTEM

A. Rain Brain Control System (1 required) – 32 Solenoid Outputs with Expansion Capability

1. General

a. Rain Drop Products, LLC, is the basis of design. Products from Vortex Aquatic Structures International, Water Play Solutions Corp., and Water Odyssey Fountain People, Inc., shall be considered provided they meet the design intent, feature flow rates, and desired sports theming as indicated in the Contract Documents. Contractor shall be responsible for all necessary structural changes and additions for substitution products. Contractor shall be responsible for all necessary electrical connection changes and additions for substitution products.

b. The control system shall be comprised of a PC, 10.1" color touch screen, I/O Modbus interface, and/or Can bus interface, operating on a Linux operating platform. The controllers' primary function is to control the operation of pumps, solenoids, sound, lighting features, and monitoring the water quality of a water play facility. The master control shall have remote access and control capability with Ethernet or wireless communication.

2. Design

a. Construction: The controllers' enclosure shall be a NEMA 4 fiberglass enclosure for indoor and outdoor application. The enclosure shall have hinged door with latches that can be padlocked. Enclosure sizes vary depending on the number and type of outputs. The master control shall have a 10.1" touch screen to program and monitor the slave controls. All electrical ports entering and exiting the enclosure shall be water tight plug

connectors, and have a screw cap when not in use. All electrical devices and components shall be compliant with one or more of the following; UL, CE, CSA, RoHS, and the FCC.

b. Power Requirements: 120 Volts, 20 Amps

c. Interface: The user interface on the master control shall be a 10.1" color touch screen. The resolution shall be 1024x600.

d. Input and Output device: Control shall communicate with devices utilizing a Modbus and/or Can Bus to controlled device. There shall be no less than (32) I/O ports and shall operate on 24VDC. The control shall have no less than (2) RS-232 Serial ports, (2) USB ports, (1) PS/2 connections for external mouse and keyboard, (1) VGA.

e. Fail Safe: The CPU shall monitor and shut down the system in the event one or more pumps devices alarm or fail. The control shall send a trouble alert in an email or other specified method.

f. Environmental: Operating temperature range shall be between 0°C to 45ºC, and 30% to 90% relative humidity (non-condensing)

g. Memory: Shall have not less than 80GB HDD, 1GB DDR2.

h. Other features: No fan design, Auto power on after power failure, wireless ready, Boot from LAN.

3. Warranty

a. Limited Warranty shall be furnished by manufacturer against defects in workmanship and materials for a period of one year from date of commissioning by Rain Drop Products factory representative.

B. 4" Manifold (2 required) – One (1) Manifold to have eighteen (18) solenoid valve assembly and one (1) Manifold to have seventeen (17) solenoid valve assembly.

1. GENERAL

a. The Flow Control Manifold System shall be responsible for controlling, and distributing the water to the water features on the Sprayground or in the pool.

2. DESIGN

a. Construction: The Flow Control Manifold System shall be constructed of high strength Schedule 80 PVC. The manifold system shall incorporate distribution nipples constructed of Schedule 80 PVC gas welded to the main manifold body. No connection tees are allowed. No solvent (glue) welding is permissible.

b. Sizes: shall be available in four inch based on the amount of water flow as indicated on the Sprayground layout.

3. CONTROLS

a. Ball Valves: Each outlet shall contain a PVC ball valve on outlets 2" and smaller (butterfly valves shall be supplied by contractor for larger sizes) to adjust the flow of water from the main manifold body.

b. Solenoid Valves: Each outlet as required shall incorporate an electrically operated valve for controlling the flow of water. The solenoid valve will either turn the water flow completely on or off. The valves shall be normally closed design and activated by a signal from the CPU.

c. Proportional Valves: Each outlet as required shall incorporate an electrically operated valve for controlling the flow of water. The proportional valve can control the flow of the water to varying degrees of flow. The valves shall be normally closed design and activated by a signal from the CPU.

d. Outlets: The outlets shall be designed so that the valves can be removed from the main body of the manifold by disconnecting a union. They shall not be permanently attached. A

Van Stone Flange w/ swivel shall be attached to the inlet of the Manifold to allow for ease of attachment to the feature supply pump. The maximum number of outlets on a manifold is 20.

e. Testing: The entire manifold assembly shall be pressure tested to 150 PSI for 30 minutes with zero leakage.

2.07 PIPING SYSTEMS

A. General

1. Provide all piping between the sprayground and mechanical room, low voltage conduits, and all interconnecting piping to and from the sprayground controller system.
2. Provide all necessary pipe supports and support systems required to support all associated piping and valves.
3. Provide all other tubing, conduit, or piping associated with equipment specified herein. Coordinate with other trades.

B. Pipes

Pipe routing as shown and detailed on the Contract Drawings is diagrammatic unless otherwise noted and is not intended to show minor details or exact locations of piping systems. Installation is required to be adjusted to accommodate interference and adjustments anticipated and encountered. Pipe sizes on plans refer to nominal inside diameter of the pipe.

1. All sprayground piping and fittings shall be NSF approved, Schedule 80 PVC.
2. Connections between metallic piping and/or equipment and PVC shall be flanged. Molded fittings shall be as manufactured by Asahi, Eslon, Chemtrol, Spears, or acceptable substitute. Fabricated fittings shall be as manufactured by Harrison Machine, Plastinetics, or acceptable substitute.
3. All materials shall be installed by workmen thoroughly skilled in their trades and all work shall present a neat and mechanical appearance when complete. The CONTRACTOR, at no additional expense to the owner, shall replace or correct any work not judged acceptable by the architect, owner's testing agency, or their consultants.
4. All support hardware, brackets, fasteners, hangers, etc. shall be stainless steel.
5. No installation shall be made that will provide a cross-connection or inter-connection between a distributing supply for drinking purposes and the sprayground, or between the sprayground and a sanitary or storm water sewer system that will permit a backflow of water into the sprayground water system.
6. All piping shall be hydrostatically (water) pressure tested for leaks before and after backfilling to guarantee water tightness. Pneumatic (air) pressure test not allowed.
7. Provisions shall be made to purge all pipes in the system.

C. Pipe Hangers and Supports

1. Manufacturer: Subject to compliance with these specifications, pipe hanger and support systems shall be manufactured by Cooper B-line (Basis of Design), Inc., TOLCO, and Anvil International or approved equal.
2. Hangers
   a. Pipes 2 inch and smaller:
      1) Adjustable steel clevis hanger, B-Line Models B3100 or B3104.
      2) Adjustable steel swivel ring (band type) hanger, B-Line Model B3170
   b. Pipes 2-1/2 and larger:
      1) Adjustable steel clevis hanger, B-Line Model B3100.

3. Wall Supports

   a. Pipes 2-1/2 inch and smaller:

      1) Steel Offset J-Hook hanger, B-Line Model B3600

   b. Pipes 3 inch and larger:

      1) Welded strut bracket and pipe straps, B-line Models B3064 and B2000 Series.

4. Supplementary Structural Supports - Design and fabricate supports using structural quality steel bolted framing materials. Channels shall be roll formed, 12 gauge ASTM A1011 SS Grade 33 steel, 1-5/8 inch or greater as required by loading conditions. Submit design for pipe tunnels, pipe galleries etc. to engineer for approval. Use clamps and fittings designed for use with the strut system.

D. Hanger Attachments

1. Upper Attachments

   a. Beam Clamps

      1) Beam clamps shall be used where piping is to be suspended from building steel. Clamp type shall be selected on the basis of load to be supported, and load configuration.

      2) C-Clamps shall be locknuts and cup point set screws similar to B-Line Model B351L or B3036L. Top flange c-clamps shall be used when attaching a hanger rod to the flange of structural steel, B-Line Model B3034 or B3033 or equal. Refer to manufacturers recommendations for setscrew torque. Retaining straps shall be used to maintain the clamp position on the beam where required.

      3) Center load beam clamps shall be used where specified. Steel clamps shall be B-Line Models B3050 or B3055. Forged steel beam clamps with cross bolt shall be B-Line B3291-B3297 Series or equal as required to fit beams.

E. Hanger Accessories

1. Hanger Rods shall be threaded both ends or continuous threaded rod f circular cross section. Use adjustable locknuts at upper attachments and hangers. No wire, chain, or perforated straps are allowed.

F. Hanger Finish

1. Finishes:

   a. Hangers and strut located in corrosive areas shall be type 316L stainless steel with stainless steel hardware.

G. Valves

1. Valves 3 inch and larger shall be butterfly type valves, with PVC body, 175# SWP with stainless steel shaft, polypropylene disc and replaceable resilient seat bonded to a rigid shaft and guaranteed for bubble tight shutoff from 27 inch vacuum to 150 PSI. Extended neck 2 inch beyond flanges for any insulated piping shall be provided with handle for manual operation. Valves to be Asahi/America, Chemtrol, George Fisher (G.F.), Bray or Dominion or acceptable substitute.

2. Valves smaller than 3" shall be PVC true union ball valves, full port, three-piece construction, blowout-proof stem, Viton seal with socket end connectors.

H. Pipe and valve identification

All exposed sprayground piping shall be equipped with color coded flow directional arrows at thirty (30) inch intervals. The following table shall be used to indicate the sprayground pipe color selection. The Contractor shall verify that all sprayground piping identification is in accordance with all local and state health regulations.

Pipe Service Application	Color
Fresh Water Lines	DARK BLUE
Main Drain Lines	BLACK

All valves shall be identified with minimum 1-1/2 inch diameter brass tags stamped with minimum 1/2-inch high numbers and attached to valves with #16 brass jack chain. (Plastic laminate engraved tags with nylon attachment acceptable.) Valves shall be described as to their function and referenced in the operating instruction manual and wall mounted piping diagram to be prepared by the CONTRACTOR.

I. Testing

All piping installation and pressure testing shall be reviewed by the Owner's testing agency before commencement of backfilling. A minimum of one week's notice is required prior to review. Results of review shall be documented.

1. All sprayground related piping, shall be hydraulically pressure tested (with water, not air) to a pressure of not less than 50 PSI for a period of no less than two (2) hours.
2. Contractor is responsible for the maintenance of a sustained 20 PSI pressure on all sprayground related piping throughout the course of construction.

2.08 MAINTENANCE EQUIPMENT

The following items are to be supplied by the CONTRACTOR unless otherwise noted. All proprietary names are to designate performance only. Approved equal products will be accepted.

A. Heavy Duty Outdoor Brush (1 required) - Brush to be made with sturdy Durene plastic center and softer border bristle construction and designed for wet outdoor concrete areas. Brush shall have a natural hardwood block with two threaded handle holes. Brush shall be a minimum of 30" wide and to include a 5' wood pole handle. Brush shall be supplied by Lincoln catalog # 32-067, or approved equal.

PART 3 - EXECUTION

3.01 SYSTEMS INSTALLATION

A. The water sprayground installer shall assemble and install all equipment, special parts and accessories in accordance with these specifications and detailed layouts and shop drawings of equipment supplier.

B. Installer shall furnish and install all anchors and inserts to be imbedded including all fittings, inserts, structure sleeves and required anchorages.

C. Install all equipment and systems in accordance with manufacturer's directions.

D. The water sprayground shall be as described in the specifications. Items are detailed and specified as a guide reference and for dimensional purposes. The Contractor must make provisions accordingly and submit shop drawings and submittals based on that data.

E. Installer shall coordinate, supervise and approve work by other trades responsible for work related to this section. All work in this section shall be performed by the water sprayground installer except as noted.

3.02 SITE CONDITIONS

A. Inspection

1. Prior to installation of the work of this section, carefully inspect the installed work of other trades and verify that all such work is complete to the point where this installation may properly commence.
2. Verify that all sprayground water spray features may be fabricated and erected in strict accordance with the original design, the approved shop drawings and the referenced standards.

B. Discrepancies

1. In the event of discrepancy, immediately notify the Architect.

2. Do not proceed with fabrication or installation in areas of discrepancy until all such discrepancies are fully resolved.

3.03 FABRICATION

A. Fabricate the water sprayground and its related systems in strict accordance with the approved shop drawings and referenced standards.

3.04 CLEAN-UP

A. Upon completion of the work of this section, immediately remove all fiberglass, debris and rubbish occasioned by this work to the approval of the Architect and at no additional cost to the Owner.

3.05 START-UP AND INSTRUCTION

A. Supply the services of an experienced operator/instructor to assist in the initial start-up and training of the water sprayground and its related systems has been completed and initially placed in operation. During this period, the Owner's representatives who will be operating the pool shall be thoroughly instructed in all phases of the water sprayground operation. Prior to leaving the job, obtain written certification from the designated Owner's representative acknowledging that the instruction period has been completed and all necessary operating information provided. A minimum of one (1) 2-hour session is required. Manufacturer of sprayground equipment shall have an on site representative for the commissioning of the water sprayground.

3.06 WINTERIZATION

A. The Contractor shall be responsible for assisting the Owner in the proper winterization methods for the water sprayground and its related equipment. Winterization equipment shall include Winterization plates that are manufactured to a minimum of 1/8" thickness, type 304 stainless steel plate with replacement gasket or O-ring and tamper resistant stainless steel screws. Winterization instructions shall also be included with the Operation & Maintenance manual.

3.07 WARRANTY

A. Shall be furnished by manufacturer providing a five year unconditional warranty against all defects in workmanship, materials and equipment operations for a period of one year from system start-up.

3.08 INSTALLATION

A. Drawings and instructions shall be supplied by manufacturer for ease of installation. Manufacturer shall supply a service technician to be on site at the time of system startup to ensure spray patterns are correct, lines are free and clear, water pressures are correct, the dynamic control module is programmed correctly, play events are correct and facility staff is properly trained on the operations of the dynamic module controller.

3.09 CONCLUSION

A. It is the intention of these specifications to provide a complete installation of the water spray ground as described. All accessory construction and apparatus necessary or advantageous in the operation or testing or high performance of the work shall be included. The omission of specific reference to any part of the work necessary for such complete installation shall not be interpreted as relieving the water spray ground supplier or installer from furnishing and installing such parts. Any such omission or clarification shall be brought to the attention of the Architect prior to bidding.

END OF SECTION 131100

PROJECT MANUAL
Water Park Facility Project at
EDWARD 'PEEL' COLEMAN CENTER
1400 Sherrick Road S.E. – Canton, OH 44707
JOB No. 11044

TABLE OF CONTENTS

	Page Nos.
Table of Contents	1-4
List of Drawings (00 01 15)	1-3

BID DOCUMENTS

INFORMATION PROVIDED TO BIDDERS

DIVISION 1 - GENERAL REQUIREMENTS

Section 01 11 00 – Summary of Work	1-7
Section 01 26 00 - Contract Modification Procedures	1-6
Section 01 23 00 - Alternates	1-2
Section 01 31 00 - Project Management and Coordination	1-5
Section 01 33 00 - Submittal and Substitution Procedures	1-11
Section 01 35 00 - Special Project Procedures	1-7
Section 01 35 16 - Alteration Project Procedures	1-2
Section 01 42 19 - Reference Standards	1-15
Section 01 45 00 - Quality Control	1-4
Section 01 50 00 - Temporary Facilities and Controls	1-8
Section 01 56 16 – Dust Barriers	1-7
Section 01 56 39 – Temporary Tree and Plant Protection	1-4
Section 01 60 00 - Product Requirements	1-3
Section 01 71 23 - Field Engineering	1-2
Section 01 73 29 - Cutting and Patching	1-3
Section 01 74 00 – Cleaning and Waste Management	1-3
Section 01 77 00 - Closeout Procedures	1-3
Section 01 78 23 - Operating and Maintenance Data	1-8
Section 01 78 36 - Warranties	1-3
Section 01 78 39 - Project Record Documents	1-4
Section 01 78 43 - Spare Parts	1-2
Section 01 79 00 - Demonstration and Training	1-4

DIVISION 2 – EXISTING CONDITIONS

Section 02 41 19 – Selective Structure Demolition	1-7

DIVISION 3 - CONCRETE

Section 03 30 00 – Cast-In-Place Concrete	1-16

DIVISION 4 - MASONRY

Section 04 20 00 – Unit Masonry	1-16

DIVISION 5 - METALS

Section 05 12 00 - Structural Steel Framing	1-10

DIVISION 6 - WOOD PLASTIC AND COMPOSITES

Not Used

DIVISION 7 - THERMAL AND MOISTURE PROTECTION

Section 07 10 00 – Dampproofing and Waterproofing	1-4
Section 07 20 00 – Thermal Protection	1-4
Section 07 53 23 – Ethylene-Propylene-Diene-Monomer (EPDM) Roofing	1-9
Section 07 62 00 – Sheet Metal Flashing and Trim	1-8
Section 07 84 00 – Firestopping	1-6
Firestopping Drawings - Concrete Floor Assemblies and CMU Wall Assemblies	1-44
Firestopping Drawings – Concrete & CMU	
Section 07 92 00 – Joint Sealants	1-8

DIVISION 8 - OPENINGS

Section 08 11 13 – Hollow Metal Doors and Frames	1-9
Section 08 31 00 – Access Doors and Panels	1-3
Section 08 71 00 – Door Hardware	1-16

DIVISION 9 - FINISHES

Section 09 21 16 – Gypsum Board Assemblies	1-16
Section 09 30 00 – Tiling	1-6
Section 09 51 23 – Acoustical Tile Ceiling	1-3
Section 09 65 00 – Resilient Flooring	1-7
Section 09 68 00 – Carpeting	1-6
Section 09 90 00 – Painting	1-9
Paint Schedule	1-7

DIVISION 10 - SPECIALTIES

Section 10 14 00 – Signage	1-3
Section 10 21 13 – Toilet Compartments	1-5
Section 10 28 00 – Toilet, Bath and Laundry Accessories	1-4
Section 10 44 00 – Fire Protection Specialties	1-2

DIVISION 11 - EQUIPMENT

Sections 11 68 00 - Play Field Equipment & Structures

DIVISION 12 - FURNISHINGS

Not Used

DIVISION 13 - SPECIAL CONSTRUCTION

Section 13 11 00 - Spraygrounds

DIVISION 14 - CONVEYING EQUIPMENT

Not Used

DIVISION 15 THROUGH 20

Not Used

DIVISION 21 - FIRE SUPPRESSION
Not Used

DIVISION 22 - PLUMBING
See Drawings

DIVISION 23 - HEATING VENTILATING AND AIR CONDITIONING
See Drawings

DIVISION 24 THROUGH 25
Not Used

DIVISION 26 - ELECTRICAL
See Drawings

DIVISION 27 - COMMUNICATIONS
Not Used

DIVISION 28 - ELECTRONIC SAFETY AND SECURITY
Not Used

DIVISION 29 THROUGH 30
Not Used

DIVISION 31 – EARTHWORK
Section 31 10 00 - Site Clearing
Section 31 20 00 - Earth Moving

DIVISION 32 - EXTERIOR IMPROVEMENTS
Section 32 12 16 - Asphalt Paving
Section 32 13 13 - Concrete Paving
Section 32 13 73 - Concrete Paving Joint Sealants
Section 32 18 16.13 - Playground Protective Surfacing
Section 32 31 13 - Chain Link Fences & Gates
Section 32 92 00 - Turf & Grasses
Section 32 93 00- Plants

DIVISION 33 – UTILITIES

Section 33 05 00 - Common Work Results for Utilities
Section 33 10 00 - Facility Water Distribution Piping
Section 33 30 00 - Facility Sanitary Sewers
Section 33 41 00 - Storm Utility Drainage Piping
Section 33 46 00 - Subdrainage