PLAN VIEW:
NOT TO SCALE

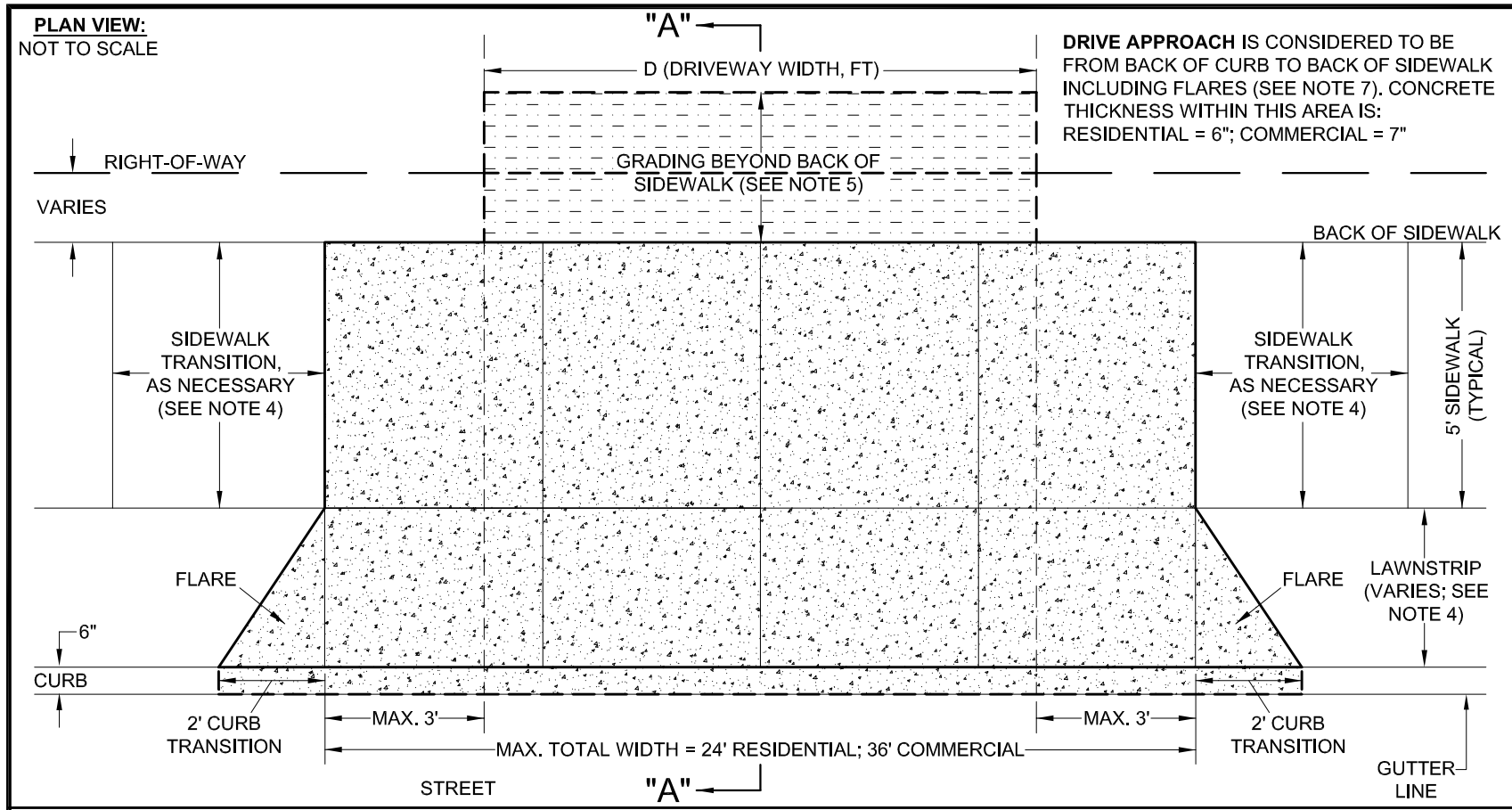

DRIVE APPROACH IS CONSIDERED TO BE FROM BACK OF CURB TO BACK OF SIDEWALK INCLUDING FLARES (SEE NOTE 7). CONCRETE THICKNESS WITHIN THIS AREA IS: RESIDENTIAL = 6"; COMMERCIAL = 7"

NOTES:

1. SIDEWALKS, CURBS, AND DRIVEWAYS SHALL BE IN ACCORDANCE WITH THE CURRENT EDITION OF THE CITY OF CANTON SPECIFICATIONS FOR THE CONSTRUCTION, REPAIR, AND REPLACEMENT OF SIDEWALKS, CURBS, AND DRIVEWAYS.
2. ODOT REFERENCES ARE FROM THE CURRENT ODOT CONSTRUCTION AND MATERIAL SPECIFICATIONS. ANY DISCREPANCIES SHALL BE SUBJECT TO THE CITY'S ENGINEER'S DISCRETION.
3. ALTERNATIVE DESIGNS MAY BE APPROVED OR REQUIRED BY THE CITY ENGINEER FOR COMMERCIAL DRIVES.
4. WHEN LAWNSTRIP WIDTH IS LESS THAN 3 FEET, LOWER THE DRIVE APPROACH/SIDEWALK PROFILE SO THAT DRIVE APPROACH CROSS SLOPE IS CONSTANT ¼" PER FOOT FROM BACK OF CURB TO BACK OF SIDEWALK. CONSTRUCT SIDEWALK TRANSITIONS WITH A MAXIMUM 12:1 LONGITUDONAL SLOPE (PARALLEL TO STREET).
5. GRADE AS APPROPRIATE OR IN ACCORDANCE WITH PLANS TO PROVIDE ADEQUATE TRANSITION TO DRIVEWAY AND YARD. FOR CITY PROJECTS, DRIVE MATERIALS AND BUILDUP SHALL MATCH EXISTING. GRADING AND MATERIALS SHALL BE PAID UNDER APPROPRIATE DRIVE RESTORATION ITEMS, ETC.
6. FOR CITY PROJECTS AND REIMBURSEMENT PROGRAM, DRIVE APPROACH PAY LIMITS SHALL CORRESPOND WITH DRIVE APPROACH LIMITS AS INDICATED HEREIN. IF SIDEWALK TRANSITIONS ARE CONSTRUCTED (SEE NOTE 5), PAY LIMITS SHALL BE EXTENDED TO INCLUDE THE COST OF THE SIDEWALK TRANSITIONS. DRIVE APPROACHES AND PAY LIMITS DO NOT INCLUDE ANY CONCRETE PORTIONS OF DRIVE BEYOND BACK OF SIDEWALK OR ANY OTHER WORK NOT DIRECTLY RELATED TO THE CONSTRUCTION OF THE DRIVE APPROACH. THE COSTS ASSOCIATED WITH EXCAVATION, FORMING, GRADING, AND RESTORATION DIRECTLY RELATED TO THE DRIVE APPROACH AS WELL AS THE COSTS FOR THE CURB CUT/DROP CURB ARE INCIDENTAL TO THE COST OF THE DRIVE APPROACH.
7. REFER TO CITY STANDARD DRAWING NO. 28 FOR DRIVE APPROACHES WITH SIDEWALK AGAINST CURB. CONNECT APRON TO CURB WITH DOWELS OR WIRE MESH.
8. PLACE 1/2" EXPANSION JOINTS AGAINST EXISTING CONCRETE DRIVES AND WALKS, BUILDING WALLS, AND OTHER FIXED OBJECTS.
9. WHEN THE LOCATION OF THE DRIVE APPROACH IS UNKNOWN AT THE TIME OF CURB CONSTRUCTION, THE DROP MAY BE SAW-CUT WITH THE CITY ENGINEER'S APPROVAL.
10. ANY MODIFICATIONS TO THESE STANDARDS ARE SUBJECT TO THE APPROVAL OF THE CITY ENGINEER.

SECTION A-A:
NOT TO SCALE

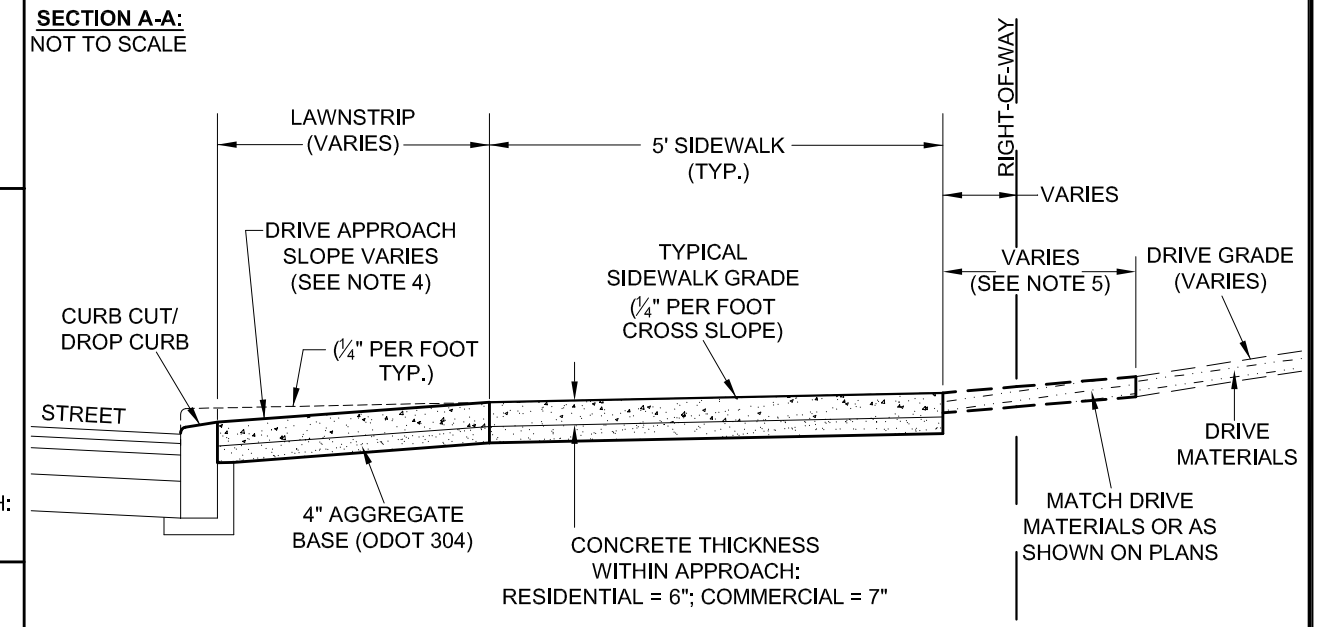

PROFILE VIEW (ALONG CURB):
NOT TO SCALE

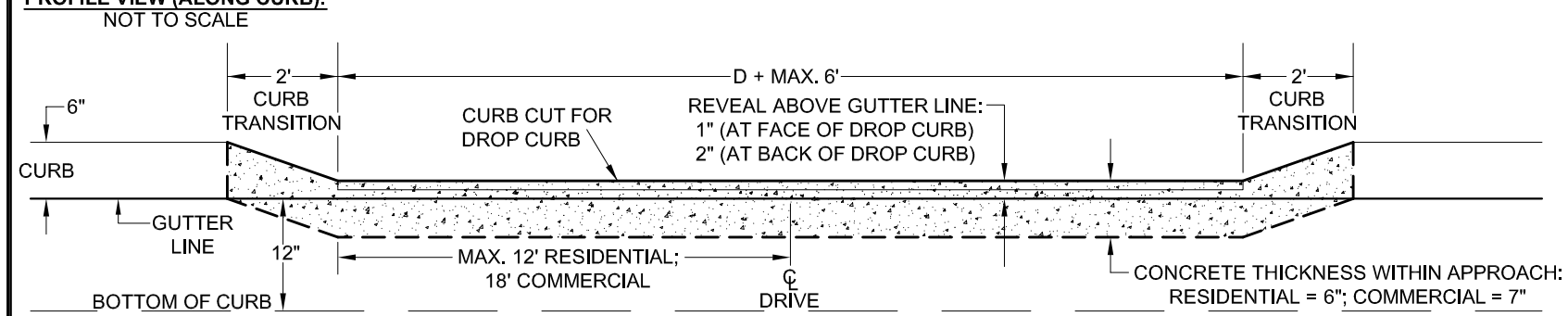

ISOMETRIC VIEW:
NOT TO SCALE

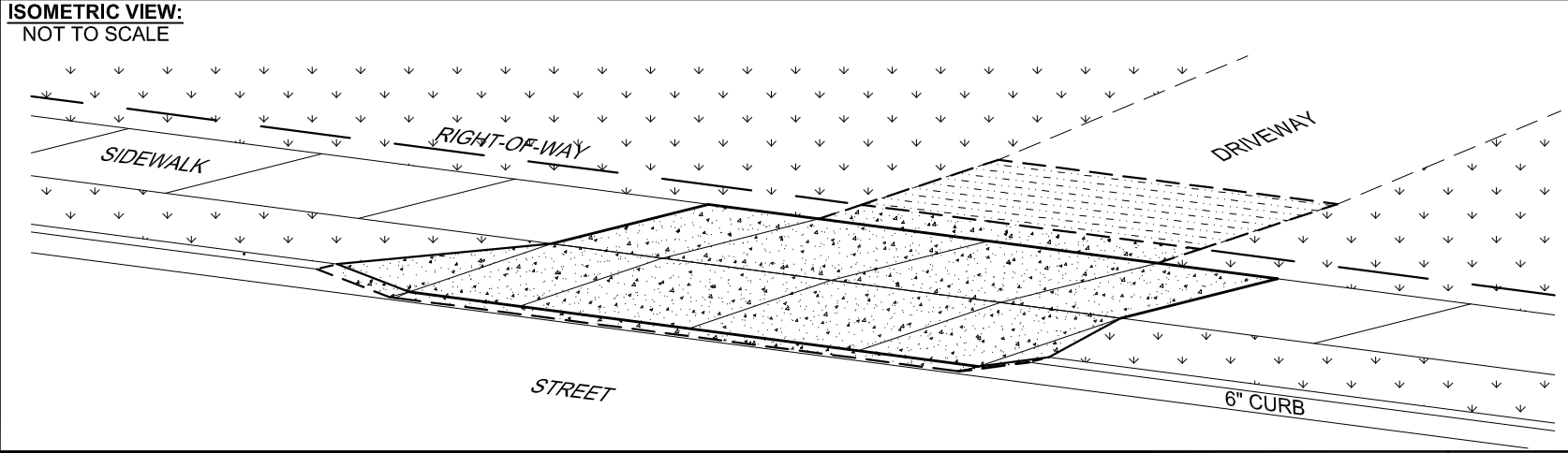

SECTION VIEW OF DROP CURB:
NOT TO SCALE

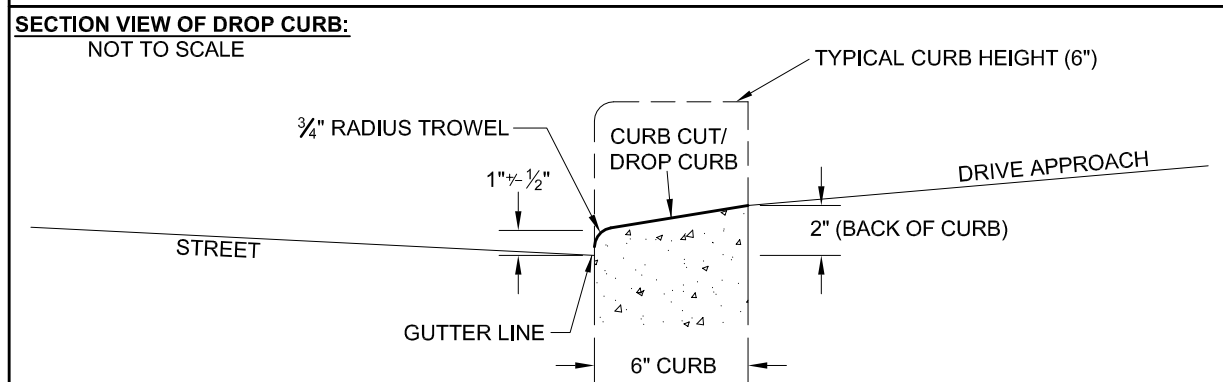

OFFICE OF THE CITY ENGINEER
CANTON, OHIO
DANIEL J. MOEGLIN, P.E., CITY ENGINEER
2436 30th St. NE 44705 330-489-3381 www.cantonohio.gov/engineering

APPROVED DATE: MAR. 2012

APPROVED BY: CDB, RMB

DRAWING FILE NAME: **ce_28.dwg**

REVISIONS

DESCRIPTION	DATE	BY
NOTE MODIFICATIONS	4/10/12	CDB

STANDARD DRAWING NO. 27

DRIVE APPROACH

WITH LAWNSTRIP BETWEEN SIDEWALK & CURB

SHEET 1 OF 1